Dakota County

Dakota County – Minnesota River Greenway, Fort Snelling State Park Segment Project

Environmental Assessment Worksheet

May 2021

Table of Contents

Page

1.0 ENVIRONMENTAL ASSESSMENT WORKSHEET 1

Question #1: Project Title 1
Question #2: Proposer 1
Question #3: Responsible Governmental Unit (RGU) 1
Question #4: Reason for EAW Preparation 2
Question #5: Project Location 2
Question #6: Description 2
Question #7: Cover Types 10
Question #8: Permits and Approvals Required 10
Question #9: Land Use 12
Question #10: Geology, Soils and Topography/Land Forms 15
Question #11: Water Resources 17
Question #12: Contamination/Hazardous Materials/Wastes 26
Question #13: Fish, Wildlife, Plant Communities, and Sensitive Ecological Resources (Rare Features) 28
Question #14: Historic Properties 43
Question #15: Visual 43
Question #16: Air 43
Question #17: Noise 44
Question #18: Transportation 45
Question #19: Cumulative Potential Effects 46
Question #20: Other Potential Environmental Impacts 47
RGU Certification 48

List of Tables

Table 1 – Agency Permits and Approvals for the River Bottom Trail Project 11
Table 2 – Agency Permits and Approvals for the Rail Crossing Bridge Project 12
Table 3 – Proposed Combined Project Area Soils List 16
Table 4 – Estimated Soil Excavation and Fill for Construction Activity..... 17
Table 5 – Delineated Wetland Basins 19
Table 6 – Nearby Wells..... 20
Table 7 – Known or Potentially Contaminated Properties That May Be Affected by the Combined Proposed Action..... 27
Table 8 – Native Plant Communities within the Project Area 34

List of Appendices

Appendix A EAW Figures
Appendix B River Bottom Trail Project General Layout and Typical Sections
Appendix C Rail Crossing Bridge Project General Layout, Project Visualization Exhibits and Typical Sections
Appendix D Potentially Contaminated Properties Supporting Documentation
Appendix E State Threatened and Endangered Species Correspondence and Supporting Documentation
Appendix F Federal Threatened and Endangered Species Correspondence
Appendix G Cultural Resources Review Correspondence

1.0 ENVIRONMENTAL ASSESSMENT WORKSHEET

This State of Minnesota Environmental Assessment Worksheet (EAW) form and EAW Guidelines are available at the Minnesota Environmental Quality Board's website.[1] The EAW form provides information about a project that may have the potential for significant environmental effects. The EAW Guidelines provide additional detail and resources for completing the EAW form.

Cumulative potential effects can either be addressed under each applicable EAW Item, or can be addressed collectively under EAW Item 19.

Note to reviewers: Comments must be submitted to the Responsible Governmental Unit (RGU) during the 30-day comment period following notice of the EAW in the EQB Monitor. Comments should address the accuracy and completeness of information, potential impacts that warrant further investigation and the need for an Environmental Impact Statement (EIS). Dakota County, as the RGU, is required to evaluate and respond to these types of substantive comments. Public comments are particularly valuable and helpful for the RGU when they:

- List any inaccuracies in the EAW or other accompanying documents;
- Show potential environmental impacts that haven't been identified by the proposer or the RGU;
- Show that certain environmental impacts have been identified, but haven't been adequately addressed; and
- Suggest possible mitigation measures that should be added to the proposal.

Question #1: Project Title

Dakota County – Minnesota River Greenway, Fort Snelling State Park Segment Project

Question #2: Proposer

Dakota County is the proposer for this project. The contact person for the proposer is:

Josh Kinney
Dakota County Project Manager
1590 Highway 55
Hastings MN 55033
Phone: (952) 891-7016
Email: Josh.Kinney@co.dakota.mn.us

Question #3: Responsible Governmental Unit (RGU)

Dakota County is the RGU for this project. The person collecting EAW comments for the RGU is:

Josh Kinney
Dakota County Project Manager
1590 Highway 55
Hastings MN 55033
Phone: (952) 891-7016
Email: Josh.Kinney@co.dakota.mn.us

Note: Item B in Minnesota Rules part 4410.4300 subp. 27 (Public Waters, Public Waters Wetlands, and Wetlands) designates the local governmental unit as the RGU.

[1] www.eqb.state.mn.us/EnvRevGuidanceDocuments.htm

Question #4: Reason for EAW Preparation

Required:	Discretionary:
☐ EIS Scoping	☐ Citizen petition
☒ Mandatory EAW	☐ RGU discretion
If EAW or EIS is mandatory give EQB rule category subpart number(s) and name(s):	☐ Proposer initiated

4410.4300 subp. 27(B) Public waters, public waters wetlands, and wetlands.

The estimated acreage of permanent wetland impacts for the "river bottom trail" project is approximately 1.07 acres, which exceeds the stated one-acre threshold.

The "rail crossing bridge" project will require work within wetland for the placement of piers to support the structure. This may require temporary impacts within the wetland, but typically structural components of these structures are not considered permanent impacts. Approaches to the crossing are proposed to be elevated boardwalk, which will also have temporary impacts during construction, but are not considered to be permanent impacts, and no mitigation for these components is required.

Both of these projects are defined under EAW Item 6(b).

Question #5: Project Location

County Dakota City/Twp Eagan and Burnsville
Sections 4, 8, 9, 17 and 18 Township 27N Range 23W

At a minimum attach each of the following to the EAW:

- County map showing the general location of the project **(see Figure 1 in Appendix A)**;
- U.S. Geological Survey 7.5 minute, 1:24,000 scale map indicating project boundaries (photocopy acceptable) **(see Figure 3 in Appendix A)**;
- Site plans showing all significant project and natural features. Pre-construction site plan and post-construction site plan. **(see Appendix B and C)**

(See Figure 4 – NRCS Soils Map in Appendix A)
(See Figure 5A-F – Wetland Review Map in Appendix A)

Question #6: Description

a. Provide the brief project summary to be published in the *EQB Monitor* (approximately 50 words).

The project will construct 3.7 miles of the Minnesota River Greenway in Fort Snelling State Park between existing trailheads. The trail will consist of a 10-foot wide paved surface with two-foot vegetated shoulders. Portions of the trail will be located on raised boardwalks. A new pedestrian bridge over the Union Pacific Railroad track will be constructed.

b. Give a complete description of the proposed project and related new construction, including infrastructure needs. If the project is an expansion include a description of the existing facility. Emphasize: 1) construction, operation methods and features that will cause physical manipulation of the environment or will produce wastes, 2) modifications

to existing equipment or industrial processes, 3) significant demolition, removal or remodeling of existing structures, and 4) timing and duration of construction activities.

Dakota County, in partnership with the Minnesota Department of Natural Resources (MnDNR), is proposing to construct approximately 3.7 miles of the Minnesota River Greenway, from the existing trailhead near the Trunk Highway 77 (Cedar Avenue) Bridge in Burnsville to the existing trailhead at CSAH 26 (Lone Oak Road) in Eagan. The proposed trail corridor is primarily located in Eagan within in an unimproved area of Fort Snelling State Park, south of the Minnesota River and within the Minnesota River floodplain. A project location map is included in Appendix A.

For regional trail context, the Minnesota River Greenway is a partially-constructed 17-mile multi-use recreational trail that follows the south side of the Minnesota River Valley through five municipalities between Burnsville and Saint Paul, Fort Snelling State Park and the Minnesota Valley National Wildlife Refuge. As depicted on Figure 2 in Appendix A, the regional trail corridor extends from Interstate-35W in Burnsville to Lilydale Regional Park in Saint Paul. The regional trail corridor provides for a connection to the Minnesota Valley State Trail. The Minnesota Valley State Trail, which will travel from Le Sueur to Saint Paul, is being planned by the MnDNR.

In accordance with Minnesota Rules 4410.1000 ("Projects Requiring EAW"), Subpart 4 ("Connected Actions and Phased Actions"), and Minnesota Rules 4410.4300 ("Mandatory EAW Categories"), Subpart 1 ("Threshold Test"), the project partners will treat the two separate trail projects that are defined in the subsections below as one proposal for purposes of this state EAW. The separation of trail projects is a function of having the Federal Highway Administration (FHWA) as a lead federal agency on only one of the projects. For reader-friendly considerations, the term "proposed combined action" in this document will mean both trail projects. When greater specificity is required, the project partners will use the individual naming convention that is associated with each trail project (specified below).

Recent and current projects that have independent utility, are related to the larger Minnesota River Greenway regional trail corridor and are located in close proximity to the combined project limits are referenced in EAW Item 19.

<u>"River Bottom Trail" Project</u>

The river bottom trail project is located between the existing trailhead at the Trunk Highway 77 (Cedar Avenue) Bridge and the Union Pacific Railroad corridor west of CSAH 26 (Lone Oak Road). This project is shown on the General Project Layout in Appendix B and includes the construction of approximately 3.3 miles of multi-use, non-motorized trail. The multi-use, non-motorized trail will consist of a 10-foot wide paved surface with two-foot vegetated shoulders. The trail shoulders will be seeded with an appropriate native plant seed mix characteristic of the area. See Appendix B for proposed trail typical sections.

The proposed trail alignment will cross Kennaley's Creek, a public water crossing and designated trout stream, via an existing 60-foot long single span steel beam pedestrian bridge (BR01600). The bridge is under the ownership of the MnDNR. The project will increase the width of the existing bridge deck with a new timber deck from eight feet wide to 12 feet wide and replace the railing with a new 54-inch high timber railing with curb meeting current geometric requirements. The supporting beams and abutments will be unchanged. No work is planned in the waterway channel.

Portions of the proposed trail will be located on raised boardwalks through the Minnesota River floodway. The proposed boardwalks will have helical anchor or driven pile concrete foundations. The boardwalk superstructure, deck and railings will be concrete.

The project will also include chain link fencing, storm sewer, storm water management appurtenances, and curb and gutter as required.

The river bottom trail project is planned for letting in August 2021, with construction beginning in November 2021.

Construction funding for the river bottom trail project was secured from FHWA as part of the 2018 Metropolitan Council Regional Solicitation federal funding grant process. FHWA is considered the lead federal agency on projects with FHWA funding and retains ultimate responsibility for compliance with the National Environmental Policy Act of 1969 (NEPA). It should be noted that Dakota County prepared a separate federal environmental review document (Categorical Exclusion) for the river bottom trail project, which is currently pending approval. Environmental commitments that were made as part of that federal environmental review document are also summarized in this state EAW.

"Rail Crossing Bridge" Project

The rail crossing bridge project begins at the eastern terminus of the river bottom trail project (described above) and ends at the existing trailhead at CSAH 26 (Lone Oak Road). This project is shown on the General Project Layout in Appendix C and includes the construction of approximately 0.4 miles of multi-use, non-motorized trail. The multi-use, non-motorized trail will consist of a 10-foot wide paved surface with two-foot vegetated shoulders. The trail shoulders will be seeded with an appropriate native plant seed mix characteristic of the area. See Appendix C for proposed trail and bridge typical sections.

As the general project name implies, this project includes the construction of a pedestrian bridge over the Union Pacific Railroad track near Lone Oak Road (CSAH 26). See Project Visualization Exhibits in Appendix C. The proposed pedestrian bridge will cross the railroad's right-of-way perpendicularly and the face of all abutments and piers will be a minimum of five feet outside the right-of-way. The rail crossing bridge project will meet all requirements as laid out in the Guidelines for Railroad Grade Separation Projects. This includes a 23'-4" vertical clearance between the bottom of the proposed structure and top of the rails at a 50-foot offset from the centerline of the tracks, with the requirement being a nine-foot offset. A ten-foot high vertical chain link fence along both sides of the bridge crossing the tracks and along the railroad side of the trail running parallel to the tracks is also included in the design. The bridge type for crossing the tracks will be a prefabricated steel truss to eliminate any disruption to the railroad's operations during the setting of the bridge.

The rail crossing bridge project is planned for letting in September 2021, with construction beginning in November 2021.

Construction funding for the rail crossing bridge project was ultimately secured from the Parks and Trails Fund, which was created by the Minnesota Legislature from the Clean Water, Land and Legacy Amendment, and passed by the voters in 2008. The rail crossing bridge project does not utilize any federal funds nor does it require any federal permits. As such, there is no federal environmental review document for the rail crossing bridge project.

Environmental Commitments for the Proposed Combined Action

The following list of environmental commitments have been made for the proposed combined action.

- Winter tree removal required – tree removal November 1 to March 31, inclusive.

- All activities on the western ¾ mile portion of the trail work, adjacent to the Minnesota River and Trunk Highway 77 (Cedar Avenue), must avoid bat pupping season – no construction activities may occur June 1 to August 15, inclusive.

- Direct temporary lighting, if used, away from wooded areas during the bat active season (April 1 to Oct 31, inclusive). If installing new or replacing existing permanent lights, use downward-facing, full cut-off lens lights (with same intensity or less for replacement lighting); or for those transportation agencies using the BUG (Backlight, Uplight, and Glare) system developed by the Illuminating Engineering Society, be as close to 0 for all three ratings with a priority of "uplight" of 0 and "backlight" as low as practicable.

- If used, erosion control blanket should be limited to 'bio-netting' or 'natural netting' types, and specifically not products containing plastic mesh netting or other plastic components. These are Category 3N or 4N in the 2016 and 2018 Minnesota Department of Transportation (MnDOT) Standards Specifications for Construction. Be aware that hydro-mulch products may contain small plastic fibers to aid in its matrix strength. These loose fibers could potentially re-suspend and make their way into Public Waters impacting protected aquatic species (e.g., mussels, fishes). This is also a Blanding's Turtles (*Emydoidea blandingii*) Required Avoidance Measure.

- Revegetation of disturbed soils must follow MnDOT Metro Vegetation Establishment Recommendations (www.dot.state.mn.us/environment/erosion/vegetation.html) and use native mixes in areas that are not proposed for mowed turf grass. Include mowing and weed spraying as indicated in the District Vegetation Establishment Recommendations. For additional information, visit: www.dot.state.mn.us/environment/erosion/vegetation.html.

- Blanding's Turtles (*Emydoidea blandingii*) Required Avoidance Measure: Avoid wetland impacts during hibernation season, between October 15th and April 15th, unless the area is unsuitable for hibernation (less than 14 inches deep).

- Blanding's Turtles (*Emydoidea blandingii*) Required Avoidance Measure: Timing of dewatering in areas 14 inches or deeper must take place between May 15th and September 15th.

- Blanding's Turtles (*Emydoidea blandingii*) Required Avoidance Measure: Culverts need to be 36 inches or greater in diameter, at least twice as wide as the normal width of open water and have an elliptical or flat-bottom.

- Blanding's Turtles (*Emydoidea blandingii*) Required Avoidance Measure: Monitor for turtles during construction and report any sightings to the MnDNR Regional Nongame Specialist, Michael Worland at 320-234-2550 or Michael.Worland@state.mn.us.

- Blanding's Turtles (*Emydoidea blandingii*) Required Avoidance Measure: Blanding's turtle flyer should be given to all contractors working in the area.

- Bell's Vireo (*Vireo bellii*) Recommended Avoidance Measure: If feasible, avoid trees and shrub removal from May 15th through August 15th to avoid disturbance or nesting birds.

- Bald eagle (*Haliaeetus leucocephalus*) Required Mitigation Measure: Right-of-way surveyors will be made aware of eagle nest concerns. Any staking done ahead of physical construction will include direction to keep an eye out for eagle nests and to mark locations on maps and report to project management and MnDOT Office of Environmental Stewardship.

- Bald eagle (*Haliaeetus leucocephalus*) Required Mitigation Measure: The contractor will make cursory inspections of the project area and trees prior to tree clearing to ensure new eagle nests have not been constructed. If large stick nests are detected, tree clearing must be delayed and coordination with MnDOT and the U.S. Fish and Wildlife Service (USFWS) is required.

- Wetland Impacts Mitigation Measure for the River Bottom Trail Project: It is believed that Wetlands 1 and 2 will be under the jurisdiction of the U.S. Army Corps of Engineers (USACE), all wetlands will be regulated under the Wetland Conservation Act (WCA), and Public Waters will be regulated by the MnDNR. Permits will be required under WCA and for Section 404 of the Clean Water Act. Permanent wetland impacts will require compensatory mitigation. Boardwalks are proposed for portions of the trail to span wetlands and waterways and minimize impacts. Mitigation for permanent wetland impacts is proposed through the purchase of wetland credits from an approved wetland bank.

- A mapped calcareous fen is located near the eastern portion of the proposed combined action and is referred to as "Area 4" in the rail crossing plans. A field review of the corridor did not identify calcareous fen habitat in the combined project area, and the proposed combined action is not located within the mapped extent of this resource. Direct impacts to this unique habitat are not anticipated. As calcareous fens are sensitive to changes in hydrology, the potential for having incidental or secondary impacts is greater than would be anticipated in a typical wetland. For these reasons, the mapped area of the calcareous fen will be specifically excluded from access during construction and additional precautions will be undertaken to reduce alteration of hydrology. This may include restricting potential construction dewatering from this area, altering the quantity and quality of storm water runoff directed in this direction, evaluation of how the project could impact groundwater movement, and preventing disturbance that could encourage invasive species from encroaching.

- Floodplain Mitigation Measure: The proposed trail alignment will not impact the floodway width or the 100-year flood elevation (will not raise by more than 0.00 feet) on the Minnesota River at published sections in the Flood Insurance Study for Dakota County, Minnesota and Incorporated Areas (Study Number 27037CV001B) dated March 16, 2016. It is understood that the trail alignment may migrate, and trail elevations may change as final design proceeds however it is unlikely that any minor changes will substantially change the 100-year water surface elevation enough to

exceed the No-Rise certificate requirements. Once substantial design is completed for Minnesota River Greenway regional trail, a final floodway encroachment model will be completed, and the No-Rise certificate will be finalized to reflect updated design conditions.

Construction Methods and Staging for the Proposed Combined Action

Fort Snelling State Park is a public recreational land that is owned and managed by the MnDNR. The MnDNR has provided Dakota County the necessary agreements for the regional trail and new bridge within Fort Snelling State Park.

Construction activities would include tree clearing, grading, excavation, installation of drainage structures, installation of aggregate base, and paving. New bridge construction will involve placing approaching trail embankments, driving pile, constructing abutments and piers, installing bridge girders, and constructing the concrete deck.

The staging of construction activities will be confirmed during the final design stage of the river bottom trail and rail crossing bridge projects. In general, construction will begin with the contractor establishing and staking out the construction boundaries. The contractor will install stabilized construction entrances prior to moving staging equipment and materials onsite. A preliminary traffic control plan has been prepared (see Figure 6 in Appendix A) which shows temporary construction access from the existing trailhead at the Trunk Highway 77 (Cedar Avenue) Bridge and at two Union Pacific Railroad crossings (Comanche Road and Yankee Doodle Road – City of Eagan Public Works material storage yard). Another temporary construction railroad crossing will be shown in the rail crossing bridge project plans. Temporary construction access is currently pending Union Pacific Railroad approval.

The duration and timing of construction phases will depend on many factors such as: 1) accessibility to the project area due to periodic flooding; 2) avoidance of threatened and endangered species during time periods when they may be vulnerable; and 3) logistical considerations such as availability of construction equipment and materials.

Using river level forecasts during construction, work would be adjusted in order to minimize environmental impacts to the construction area. In the event of river flooding during construction, all equipment and materials would be removed from the site when the three-day river forecast elevation is at major flood stage. Disturbed soils and extra construction materials, such as uninstalled culverts and aggregate material, would be secured.

It is anticipated that the contractor(s) will use logging equipment to safely perform the tree clearing operation. Woody biomass will either be removed from the construction site or chipped and left on site. After removal of the trees, the contractor(s) will install silt fence, filter logs and other perimeter erosion control measures. The process and timing of tree clearing will be planned to avoid impacts to protected species.

Once the perimeter erosion control is installed, the contractor(s) will begin excavating the trail subgrade. It is anticipated the contractor(s) will be using dozers, scrapers and excavators to perform the mass grading for the trail. All unsuitable materials including stumps will be hauled off site and legally disposed of. Initial grading of the trail will follow the installation of water crossings and drainage structures and the import of granular material to construct the subgrade. Placement of aggregate trail base material will follow along with shaping of side slopes. Any areas that are not being actively worked on will be temporarily seeded and erosion blanket applied as appropriate. Finally, the bituminous trail surface will be installed, and all disturbed areas will be stabilized and seeded with natural vegetation characteristic of the area. Wildlife-friendly erosion control blanket with rectangular-shaped

natural fiber netting will be specified. All temporary erosion control measures will be removed in accordance with the National Pollutant Discharge Elimination System/State Disposal System (NPDES) Construction Stormwater Permit after permanent vegetation is established.

Construction will require cut and fill slopes throughout the trail corridor in order to achieve the desired trail alignment and to create a consistent minimum trail surface elevation to prevent short segments from being flooded under minor flood events. The proposed trail alignment has been designed to avoid mature floodplain forest and quality wildlife habitat. The horizontal and vertical trail alignment and grade will comply with American Association of State Highway and Transportation Official (AASHTO) Guide for Development of Bicycle Facilities and the Americans with Disabilities Act (ADA) accessibility guidelines.

The trail will require installation of culverts as it crosses a few forced low areas that drain to the Minnesota River. Current engineering designs propose larger water crossings over defined channels to be accomplished with use of a boardwalk, to ensure there is no net loss of channel cross-sectional area, thereby minimizing impacts to pre-construction hydrology, including water levels and hydroperiod.

The project partners estimate that 10 to 13 culverts with a diameter between 12 and 27 inches will be required across the entire project. These smaller drainage structures are not located in a defined drainage channel and will be used to equalize flow and to provide hydrologic connectivity between the two sides of the trail, so that effects on the pre-construction hydrology, including water levels and hydroperiod, are minimized to the extent possible.

The proposed trail alignment will continue to be refined by Dakota County through a pre-project consultation process with the MnDNR.

The river bottom trail and rail crossing bridge projects are being designed in accordance with MnDOT State Aid Geometric Design Standards, Minnesota Manual of Uniform Traffic Control Devices (MnMUTCD), MnDOT Bikeway Facility Design Manual, AASHTO Guide for Planning, Design and Operation of Pedestrian Facilities, Trail Planning, Design and Development Guidelines (MnDNR, 2007), and ADA Guidelines. The combined proposed action will be constructed in accordance with the current edition of MnDOT's "Standard Specifications for Construction."

c. Project Magnitude
Total project acreage: **15.15 acres**
Linear project length: **3.7 miles**
Number and type of residential units: **Not Applicable**
Commercial building area (in square feet): **Not Applicable**
Industrial building area (in square feet): **Not Applicable**
Institutional building area (in square feet): **Not Applicable**
Other uses – specify (in square feet): **Not Applicable**
Structure height(s): **Not Applicable**

d. Explain the project purpose; if the project will be carried out by a governmental unit, explain the need for the project and identify its beneficiaries.

Purpose and Need

The purpose of the proposed combined action is to provide a safe and continuous connection for pedestrians and bicyclists between the existing trailheads at Trunk Highway 77 (Cedar Avenue) and CSAH 26 (Lone Oak Road), and to encourage non-motorized transportation use in accordance with several policy plans at the state and local levels.

There is a gap in the regional trail system along the south side of the Minnesota River between the existing trailheads identified above. The nearest parallel route is a four-mile stretch of Trunk Highway 13 (55 MPH speed limit, 22,100 average annual daily traffic volume in 2019). Currently, the highway lacks bicycle/pedestrian facilities, so cyclists must ride on the shoulder, bypass lanes, and turn lanes in order to access the regional trail system and reach the employment center of northern Eagan. This lack of pedestrian and bicycle facilities creates a major deterrent to pedestrian and bicycle use. Attempting to bike or walk along Trunk Highway 13 would be a large risk to cyclist and pedestrian safety. On the segment of Trunk Highway 13 between Trunk Highway 77 (Cedar Avenue) and CSAH 26 (Lone Oak Road), there were three crashes involving bicyclists and pedestrians reported between 2009 and 2013 (Minnesota Crash Mapping Analysis Tool, MnCMAT).

The proposed trail corridor is also identified as a Tier 1 alignment in the Metropolitan Council's Regional Bicycle Transportation Network (RBTN). This classification is based on potential bicycle demand levels as determined in the Metropolitan Council's *Regional Bicycle System Study* (2014). The existing trailhead at CSAH 26 (Lone Oak Road) will connect to the existing Big Rivers Regional Trail leading to Saint Paul, and the Interstate-494 bridge trail, which connects west to Bloomington and east to Eagan. The existing trailhead at the Trunk Highway 77 (Cedar Avenue) Bridge connects to trails in Bloomington via an existing pedestrian river crossing at the old Cedar Avenue Bridge, and another existing segment of the Minnesota River Greenway (Black Dog trail).

Project Beneficiaries

The proposed combined action will improve safety for trail users within Fort Snelling State Park by creating a continuous pedestrian and bicycle trail for users of all ages and abilities and providing a safe connection over the Union Pacific Railroad with a trail bridge. Nearby residents will gain a car-free commuting option, a convenient connection to the scenic Minnesota River Valley, a safe route to recreation destinations along the river, and reduced bicycle travel times by avoiding several controlled intersections along Trunk Highway 13.

e. Are future stages of this development including development on any other property planned or likely to happen?
☒ Yes ☐ No
If yes, briefly describe future stages, relationship to present project, timeline and plans for environmental review.

The proposed combined action is part of the larger Minnesota River Greenway regional trail corridor. As development projects are planned, additional environmental review requirements under the Minnesota Environmental Policy Act will be determined, pursuant to Environmental Quality Board rules, Minnesota Rules, chapter 4410.

f. Is this project a subsequent stage of an earlier project? ☐ Yes ☒ No
If yes, briefly describe the past development, timeline and any past environmental review.

Currently, there is no continuous trail facility along the south side of the Minnesota River between the existing trailheads at Trunk Highway 77 (Cedar Avenue) and CSAH 26 (Lone Oak Road). As noted previously, the Minnesota River Greenway follows the south side of the Minnesota River Valley through five municipalities between Burnsville and Saint Paul, Fort Snelling State Park and the Minnesota Valley National Wildlife Refuge. Various segments of this 17-mile regional trail have been constructed over time and were subject to environmental review, as applicable. Recent and current projects that have independent

utility, are related to the larger Minnesota River Greenway regional trail corridor and are located in close proximity to the combined project limits are referenced in EAW Item 19.

Question #7: Cover Types

Estimate the acreage of the site with each of the following cover types before and after development:

	Before	After		Before	After
Wetlands	3.30	2.23	Lawn/Landscaping	0	0
Deep water/streams	0.28	0.28	Impervious Surfaces	0	3.69
Wooded/forest	10.69	0	Stormwater Pond	0	0
Brush/grassland	0.88	8.95	Other (Describe)	0	0
Cropland	0	0			
			TOTAL	15.15	15.15

If **Before** and **After** totals are not equal, explain why:

See Figure 7 in Appendix A for the Minnesota Land Cover Classification System Map.

Question #8: Permits and Approvals Required

List all known local, state and federal permits, approvals, certifications and financial assistance for the project. Include modifications of any existing permits, governmental review of plans and all direct and indirect forms of public financial assistance including bond guarantees, Tax Increment Financing and infrastructure. *All of these final decisions are prohibited until all appropriate environmental review has been completed. See Minnesota Rules, Chapter 4410.3100.*

"River Bottom Trail" Project

Permits and Approvals

Permits and approvals that may be required for the river bottom trail project are listed in Table 1.

Table 1 – Agency Permits and Approvals for the River Bottom Trail Project

Unit of Government	Type of Approval or Permit	Status
Federal		
MnDOT State Aid on behalf of FHWA	Categorical Exclusion Approval	Pending
	Section 4(f) Programmatic Determination	Completed
MnDOT CRU on behalf of FHWA	Section 106 Determination	Completed
MnDOT OES on behalf of FHWA	ESA Section 7 Determination	Completed
U.S. Army Corps of Engineers	Section 404 Permit	To Be Obtained
State		
MnDNR	Section 4(f) Programmatic Concurrence	Completed
	Right-of-Way Agreement	Completed
	Plan Review	Ongoing
	Wetland Conservation Act (WCA) Permit	To Be Obtained
	Public Waters Permit	To Be Obtained
	Water Appropriation Permit for Construction Dewatering (If Needed)	To Be Obtained
MnDOT	Construction Plan Approval	Pending
	Categorical Exclusion Approval	Pending
MPCA	National Pollutant Discharge Elimination System – Construction Stormwater Phase II Permit	To Be Obtained
SHPO	Section 106 Consultation	Completed
Local		
Dakota County	State EIS Need Decision	To Be Requested
	Layout Review	To Be Requested
City of Eagan	WCA Permit (Reviewer)	To Be Obtained
	Plan Review	To Be Requested
Lower Minnesota River Watershed District	Floodplain Fill/No Rise Certification	To Be Obtained
Railroad		
Union Pacific	Railroad Agreement/Temporary Occupancy Permit	To Be Requested

Anticipated Funding

The estimated total project cost for the river bottom trail project is $4,823,500. This includes inflation and contingencies. This total will be paid for through a combination of federal (73 percent) and county (27 percent) funds. This project is in the approved 2021-2024 State Transportation Improvement Program (STIP) under sequence number 1656.

"Rail Crossing Bridge" Project

Permits and Approvals

Permits and approvals that may be required for the rail crossing bridge project are listed in Table 2.

Table 2 – Agency Permits and Approvals for the Rail Crossing Bridge Project

Unit of Government	Type of Approval or Permit	Status
Federal		
U.S. Army Corps of Engineers	Section 404 Permit (If Necessary)	To Be Obtained
State		
MnDNR	Right-of-Way Agreement	Completed
	Layout Review	Ongoing
	Wetland Conservation Act Permit (If Necessary)	To Be Obtained
	Water Appropriation Permit for Construction Dewatering (If Needed)	To Be Obtained
MPCA	National Pollutant Discharge Elimination System – Construction Stormwater Phase II Permit	To Be Obtained
SHPO (via MnDOT CRU)	Historic/Archaeological Review	Completed
Local		
Dakota County	Construction Plan Approval	To Be Requested
	State EIS Need Decision	To Be Requested
City of Eagan	Plan Review	To Be Requested
	Wetland Conservation Act Permit (Reviewer)	To Be Obtained
Lower Minnesota River Watershed District	Floodplain Fill/No Rise Certification	To Be Obtained
Railroad		
Union Pacific	Railroad Agreement/Temporary Occupancy Permit	To Be Requested

Anticipated Funding

The estimated total project cost for the rail crossing bridge project is $6,500,000. This includes inflation and contingencies. This total will be paid for through a combination of state (39 percent) and county (61 percent) funds.

Question #9: Land Use

a. Describe:
i. Existing land use of the site as well as areas adjacent to and near the site, including parks, trails, prime or unique farmlands.

Figure 8 in Appendix A shows the existing land use of the site as well as areas adjacent to and near the proposed combined action, based on Metropolitan Council data.

The proposed trail corridor is primarily located in Eagan within an unimproved area of Fort Snelling State Park, south of the Minnesota River and within the Minnesota River floodplain. This public recreational land is owned and managed by the MnDNR. The MnDNR has provided Dakota County the necessary agreements for the regional trail and bridge within Fort Snelling State Park.

The combined proposed action will connect existing trailheads at Trunk Highway 77 (Cedar Avenue) in Burnsville and CSAH 26 (Lone Oak Road) in Eagan. The existing trailhead at CSAH 26 (Lone Oak Road) will connect to the existing Big Rivers Regional Trail leading to Saint Paul, and the I-494 bridge trail, which connects west to Bloomington and east to Eagan. The existing trailhead at the Trunk Highway 77 (Cedar Avenue) Bridge connects to trails in Bloomington via an existing pedestrian river crossing at the old Cedar Avenue Bridge, and another existing segment of the Minnesota River Greenway (Black Dog trail).

The proposed regional trail alignment crosses an active Union Pacific Railroad track in one location. Approximately eight trains per day use the rail line, running at speeds of up to 49 miles per hour. To avoid potential trail user conflicts with the railroad, a grade separated railroad crossing is being proposed as part of the rail crossing bridge project.

Access to the eastern portion of the combined project corridor is from the existing trailhead at CSAH 26 (Lone Oak Road). The project corridor crosses the Union Pacific Railroad approximately 300 feet northwest from the existing trail. This portion of the project corridor is a grassland area that then follows the railroad and overheard powerlines southwest for approximately 0.3 miles. The path then curves around the northern side of man-made retention ponds (former gravel pits). The combined project corridor is a relatively straight path southwest through grassland for approximately 0.75 miles.

The combined project corridor then extends south of two wastewater treatment ponds owned and managed by the Metropolitan Council. It continues relatively straight through more grassland for approximately 0.4 miles before extending northwest through an area often inundated with water. The combined project corridor curves through a forested area and crosses one stream channel. The western portion of the combined project corridor under Trunk Highway 77 (Cedar Avenue) is occupied by a MnDNR boat launch and can be accessed from Nichols Road.

A buried hazardous liquid pipeline is located on the eastern portion of the combined project corridor, east of the wastewater treatment ponds, south of the retention ponds, then extending west and north of the combined project corridor.

None of the right-of-way associated with the project lies within an agricultural preserve.

The combined proposed action is located within the defined project coordination area for the Minneapolis/St. Paul International Airport. The MnDOT Office of Aeronautics determined that the proposed combined action would have no substantial effect to the operations at the airport.

ii. Plans. Describe planned land use as identified in comprehensive plan (if available) and any other applicable plan for land use, water, or resources management by a local, regional, state, or federal agency.

The proposed regional trail is primarily located on publicly owned land within the municipal boundaries of the City of Eagan. A short segment of the proposed river bottom trail near the existing trailhead at the Trunk Highway 77 (Cedar Avenue) Bridge is located within the municipal boundaries of the City of Burnsville. The proposed combined action supports several trail system plans that have been adopted at the local and state level.

Developing the Minnesota River Greenway trail is supported by the *Dakota County 2040 Comprehensive Plan* (2019) and the City of Eagan's *2040 Comprehensive Plan* (2020). The land use described in the City's Comprehensive Plan is consistent with the proposed recreational opportunities in the combined proposed action.

As noted previously, the mission of Fort Snelling State Park, as stated in the *Fort Snelling State Park Management Plan* (1997), is to preserve and manage diverse natural, scenic, and cultural resources while providing recreation and educational opportunities. One of the major

initiatives stated in the management plan is to provide public access to Fort Snelling from Dakota County.

The *Dakota County Park System Plan* (2008) established the foundation for a countywide greenway network by envisioning a system of regional greenways that interconnect parks, schools, local trails, and libraries through the non-rural portions of the county. One of the greenways identified by this plan is the Minnesota River Greenway. In 2010, Dakota County adopted the *Dakota County Greenway Guidebook* as a framework for greenway development. The guidebook establishes a framework for a collaborative approach to governance, stewardship, design and operation of greenways.

The *Minnesota River Greenway Master Plan* (2012) conveys a vision to establish a greenway following the south side of the Minnesota River valley from Burnsville to Saint Paul. The greenway master plan identified issues, challenges, and potential trail alignments for the entire length of the Minnesota River Greenway.

The master plan alignment concepts were further refined in the *Minnesota River Greenway, Eagan Segment Feasibility Study Report* (2014). The feasibility study summarized the environmental screening and agency coordination process and identified a feasible and supported trail alignment(s) for the County to use to solicit funding for trail construction.

The *Minnesota River Greenway Cultural Resources Interpretive Plan* (August 2017) provides a comprehensive vision for engaging trail visitors in the history, nature, and culture of the Lower Minnesota River Valley.

iii. Zoning, including special districts or overlays such as shoreland, floodplain, wild and scenic rivers, critical area, agricultural preserves, etc.

The proposed combined action will primarily be located on property that the City of Eagan Zoning Ordinance has zoned as "P" – Park District. The Park Zoning District is intended for public and private park uses and related facilities.

The short trail segment in Burnsville is located on property that the City of Burnsville Zoning Ordinance has zoned as "CD" – Conservancy. The Conservancy Zoning District allows public uses such as trails as a conditional use.

There is no shoreland zoning district within the combined project limits.

The proposed trail alignment is almost entirely within the Federal Emergency Management Agency (FEMA) mapped floodway for the Minnesota River (designated FEMA flood zone AE).

The project area is not located within a coastal zone or coastal barrier.

No wild and scenic rivers exist within the combined project limits.

b. Discuss the project's compatibility with nearby land uses, zoning, and plans listed in Item 9a above, concentrating on implications for environmental effects.

The proposed combined action is compatible and consistent with the applicable land uses, zoning and management plans applicable to the defined project area. The trail was designed to minimize fill and excavation in part to reduce impacts to floodplain hydrology. Floodplain modeling by Dakota County suggests that, although fill in the floodplain will be required to complete the project, it will not cause a rise in the 100-year flood elevation. If that condition

changes for any reason, Dakota County will work with the Lower Minnesota River Watershed District on a compensatory mitigation plan.

As noted previously, the MnDNR and County have determined that it is mutually desirable to provide a trail corridor and associated trail facilities within Fort Snelling State Park. Dakota County will continue to coordinate, communicate, and consult with the MnDNR throughout the design, development and operation of the trail. Dakota County is committed to being a partner with the MnDNR to ensure that sustainable and safe recreational opportunities are provided.

c. Identify measures incorporated into the proposed project to mitigate any potential incompatibility as discussed in Item 9b above.

The proposed combined action is compatible with planned land uses in the project area. Should any incompatibilities arise, Dakota County will coordinate with appropriate agencies regarding mitigation requirements. Overall, the Minnesota River Greenway supports the City of Eagan's park and trail system and the MnDNR's mission statement by providing outdoor recreation in the Minnesota River Valley. The completion of this segment of the Minnesota River Greenway will expand access to Fort Snelling State Park.

Question #10: Geology, Soils and Topography/Land Forms

a. Geology – Describe the geology underlying the project area and identify and map any susceptible geologic features such as sinkholes, shallow limestone formations, unconfined/shallow aquifers, or karst conditions. Discuss any limitations of these features for the project and any effects the project could have on these features. Identify any project designs or mitigation measures to address effects to geologic features.

Three types of bedrock exist in the combined project corridor. The eastern and western portions of the combined project corridor consist of the Prairie Du Chien Group, described as dolostone. In the central portion of the combined project corridor, Jordan Sandstone is located on both sides of the Prairie Du Chien Group. The Jordan Sandstone consists of medium- to coarse-grained, friable quarzrose sandstone. The central portion of the combined project corridor consists of the St. Lawrence and Franconia Formations, described as dolomitic shale and siltstone (Mossler, 1990). Depth to bedrock ranges from approximately 201 feet below ground surface (BGS) in the eastern and western portions of the combined project corridor to approximately 350 feet BGS in the central portion (Bloomgren, 1990).

There are no foreseeable limitations to the combined proposed action due to bedrock/bedrock aquifer features at this stage of preliminary site investigations.

b. Soils and topography – Describe the soils on the site, giving NRCS (SCS) classifications and descriptions, including limitation of soils. Describe topography, any special site conditions relating to erosion potential, soil stability or other soils limitations, such as steep slopes, highly permeable soils. Provide estimated volume and acreage of soil excavation and/or grading. Discuss impacts from project activities (distinguish between construction and operational activities) related to soils and topography. Identify measures during and after project construction to address soil limitations including stabilization, soil corrections or other measures. Erosion/sedimentation control related to stormwater runoff should be addressed in response to Item 11.b.ii.

According to the Dakota County Geologic Atlas, the surficial geology along the combined project corridor consists of organic deposits of peat and organic-rich silt and clay, which can include small bodies of open water, and floodplain alluvium of poorly bedded, moderately well sorted sediments deposited by modern streams during flood stage (Hobbs, 1990). Figure 4 in Appendix A contains the Natural Resource Conservation Service (NRCS) soils map showing the combined project corridor area soils and descriptions. Soil units occurring within the combined project area are also identified in Table 3.

Table 3 – Proposed Combined Project Area Soils List

Map Unit	Soil Name	Slope	Drainage Class	Notes	Paths and Trails Limitations
7D	Hubbard loamy sand, 12 to 18 percent slopes	15%	Excessively Drained	Outwash	Somewhat Limited
94C	Terril loam, 4 to 12 percent slopes	8%	Well Drained	Colluvium	Somewhat Limited
463	Minneiska loam, occasionally flooded	1%	Moderately Well Drained	Alluvium	Somewhat Limited
539	Klossner muck, 0 to 1 percent slopes	0%	Very Poorly Drained	Organic Material over Alluvium	Very Limited
540	Seelyeville muck	0.5%	Very Poorly Drained	Organic Material	Very Limited
545	Rondeau muck	0.5%	Very Poorly Drained	Organic Material over Limnic Sediments	Very Limited
1027	Udorthents, wet	1%	Not Rated	Variable Soil Material	Not Rated
1078	Anthroportic Udorthents, 2 to 9 percent slopes	6%	Moderately Well Drained	Anthropogenic Material	Somewhat Limited
W	Water	--	Not Rated	--	Not Rated
7D	Hubbard loamy sand, 12 to 18 percent slopes	15%	Excessively Drained	--	Somewhat Limited
94C	Terril loam, 4 to 12 percent slopes	8%	Well Drained	--	Somewhat Limited

Aggregate and other appropriate materials will be used to construct a suitable base for the trail. Unsuitable soils will be excavated and replaced with these materials.

In particular, unsuitable soils such as those identified as "very limited" or "somewhat limited" will be excavated to a minimum of one foot below the existing grade and removed. A layer of geogrid or geotextile fabric will be placed in the excavation to bridge over the unsuitable soils and imported granular material will be used to reconstruct the subgrade. The granular material will extend the full depth of the excavation to just below the bottom of the base material. Suitable excavated material will be reused as topsoil or as fill on the slope along the length of the trail. Any unsuitable material will become the property of the contractor and hauled off-site for disposal in accordance with applicable regulations.

Proposed areas of soil disturbance and estimated volumes for soil excavation and fill are provided in Table 4. The earthwork quantities are based on preliminary design and related construction limits. These estimates are subject to change as final design progresses.

Table 4 – Estimated Soil Excavation and Fill for Construction Activity

Location	Proposed Construction/ Disturbed Areas (Acres)	Estimated Excavation (Cubic Yards)	Estimated Fill (Cubic Yards)
"River Bottom Trail" Project	12.3	2,559	30,923
"Rail Crossing Bridge" Project	0.5	25	350
Total	**12.8 Acres**	**2,584 Cubic Yards**	**31,273 Cubic Yards**

The combined project corridor is generally sloping north towards the Minnesota River. Surface elevations range from a high of approximately 705 feet above mean sea level (AMSL) on the east side of the combined project corridor near the Union Pacific Railroad to approximately 695 feet AMSL on the western side of the combined project corridor near Trunk Highway 77 (Cedar Avenue).

Subsurface investigations have been performed within the combined project corridor to inform the design of the trail subgrade, soil corrections, retaining wall and other project features associated with boardwalk and bridge areas.

Question #11: Water Resources

a. Describe surface water and groundwater features on or near the site in a.i. and a.ii. below.

i. Surface water – lakes, streams, wetlands, intermittent channels, and county/judicial ditches. Include any special designations such as public waters, trout stream/lake, wildlife lakes, migratory waterfowl feeding/resting lake, and outstanding resource value water. Include water quality impairments or special designations listed on the current MPCA 303d Impaired Waters List that are within 1 mile of the project. Include DNR Public Waters Inventory number(s), if any.

See Figure 9 in Appendix A for location of hydrology features of the combined project area.

<u>Rivers/Streams</u>

Minnesota River: Public Waters Watercourse (M-055)

- The Minnesota River is a 332-mile-long tributary to the Mississippi River with an approximately 17,000-square-mile watershed spanning southwest Minnesota, eastern South Dakota and a small area in northern Iowa.

- Proximity to Project: The proposed trail runs along the Minnesota River for its entire 3.7-mile length. In accordance with the Minnesota Buffer Law, there will be a minimum 30-foot vegetated buffer between the paved trail and the river.

- Minnesota Pollution Control Agency (MPCA) Status: Impaired-Dissolved Oxygen and turbidity (approved TMDL Plans for Mercury in Fish, Mercury in Water column, Dissolved Oxygen and turbidity); additional impairments: PCB in fish tissue; caution for overall condition and Biology due to excessive salt/chloride in water.

Black Dog Creek (M-055-004)

- Black Dog Creek is a small tributary to the Minnesota River in Dakota County.
- Proximity to Project: The trail is proposed to cross this tributary, with the use of an existing boardwalk owned by the MnDNR.
- MPCA Status: It is identified as trout stream. No further MPCA analysis.

Kennaley's Creek (M-055-004-000.5)

- Kennaley's Creek is a small tributary to the Minnesota River in Dakota County.
- Proximity to Project: The trail is proposed to cross this tributary, with the use of a new concrete boardwalk.
- MPCA Status: It is identified as trout stream. No further MPCA analysis.

Lakes

Long Meadow Lake (PWI 27000200)

- Long Meadow Lake is a 1,322-acre Public Water Basin in Hennepin County.
- Proximity to Project: The trail is proposed to pass within 1,300 feet of Long Meadow Lake near Cedar Avenue, which is situated on the opposite side of the Minnesota River from the trail project.
- MPCA Status: No MPCA analysis.

Gun Club Lake (PWI 19007800)

- Gun Club Lake is a 533-acre Public Water Basin in Dakota County.
- Proximity to Project: The trail is proposed to pass within 1,300 feet of Gun Club Lake, near the I-494 corridor.
- MPCA Status: No MPCA analysis.

Public Water Wetlands

Nicols (#19014200) and Quarry Lakes (#19012800) are Public Water Wetlands within the combined project area. These wetlands were also identified during the wetland delineation as Wetlands 1 and 2. These wetlands are identified separately as they are regulated by the MnDNR as Public Waters for the purposes of permitting.

Calcareous Fens

A mapped calcareous fen is located near the eastern portion of the proposed combined action and is referred to as "Area 4" in the rail crossing plans. A field review of the corridor did not identify calcareous fen habitat in the combined project area, and the proposed

combined action is not located within the mapped extent of this resource. Direct impacts to this unique habitat are not anticipated. As calcareous fens are sensitive to changes in hydrology, the potential for having incidental or secondary impacts is greater than would be anticipated in a typical wetland. For these reasons, the mapped area of the calcareous fen will be specifically excluded from access during construction and additional precautions will be undertaken to reduce alteration of hydrology. This may include restricting potential construction dewatering from this area, altering the quantity and quality of storm water runoff directed in this direction, evaluation of how the project could impact groundwater movement, and preventing disturbance that could encourage invasive species from encroaching.

Wetlands

Wetland delineations occurred along the project corridor in August and September of 2013, September of 2019, and July of 2020 using methods described in the "Regional Supplement to the Corps of Engineers Wetland delineation Manual: Midwest Region (Version 2.0)". These delineations identified, classified, and delineated 13 wetland basins, which are outlined in Table 5. These wetlands include the Public Water Wetlands Nicols Lake and Quarry Lakes as portions of delineated Wetlands 1 and 2.

Table 5 – Delineated Wetland Basins

Wetland ID	Community Type	Anticipated Jurisdictional Status
Wetland 1[1]	Type 1	USACE, WCA
Wetland 2[1, 2]	Type 2/3/4/6	USACE, WCA
Wetland 3[1]	Type 2	USACE, WCA
Wetland 4[1]	Type 3	USACE, WCA
Wetland 5[3]	Unknown	Unknown
Wetland 6[3]	Unknown	Unknown
Wetland 7[3]	Unknown	Unknown
Wetland 8[1]	Type 2	USACE, WCA
Wetland 9[1]	Type 3	USACE, WCA
Wetland 10[1, 2]	Type 6, 7	USACE, WCA
Wetland 11[1]	Type 1	USACE, WCA
Wetland 12[1, 2]	Type 7	USACE, WCA
Wetland 13[2]	Type 2	Not expected to be regulated by the USACE, WCA or DNR

[1] Delineated by Bolton and Menk as part of the "Minnesota River Greenway Eagan Alignment Feasibility Study" project.
[2] Delineated by Bolton and Menk as part of the "Minnesota River Greenway Pedestrian Bridge" project.
[3] Information not provided in any delineation report.

ii. Groundwater – aquifers, springs, seeps. Include: 1) depth to groundwater; 2) if project is within a MDH wellhead protection area; 3) identification of any onsite and/or nearby wells, including unique numbers and well logs if available. If there are no wells known on site or nearby, explain the methodology used to determine this.

Groundwater

Regionally, the general direction of shallow groundwater flow is to the northeast toward the Mississippi River. Depth to groundwater is less than 10 feet BGS (Palen, 1990).

Water Wells

Review of the Minnesota Well Index shows several wells within 100 feet of the proposed combined action, but outside the area of construction (see Table 6).

Table 6 – Nearby Wells

Well Name	Unique Well ID Number	Well Depth/Static Water Level (ft)	Well Address	Well Type
DW	512247	43/1	Unknown	Dewatering (unverified)
Mann, Hamilton	240618	56/38	1866 Meadowview Lane	Unknown (unverified)
Rice Lake Construction Group	810889	115/7	3725 Lift Station L13	Domestic (unverified)
WN S5-USGS	277775	Unknown	Unknown	Unknown (likely monitoring well)
OWT-5 (540952E)	277770	7/0	Unknown	Monitoring well
WN1-USGS	277774	Unknown	Unknown	Unknown (likely monitoring well)
MW-FEN-4	452925	21/2	Unknown	Monitoring well
MW-FEN-3	452924	75/Unknown	Unknown	Monitoring well
MW-1 of 5	540952	9/0	Unknown	Monitoring well
OWT-3 (540952C)	277771	8/0	Unknown	Monitoring well
MW-FEN-2B	452923	15/ Unknown	Unknown	Monitoring well
OWT-4 (540592D)	277772	6/0	Unknown	Monitoring well

Source: Wenck Associates, Inc., Limited Phase I Environmental Site Assessment, Fort Snelling Greenway Trail, Eagan, Minnesota, August 2020.

The Minnesota Well Index does not represent all wells in the state, but it is the single most complete listing of state wells. If any unused or unsealed wells are discovered in the combined project area during construction, they will be addressed in accordance with Minnesota Rules, Chapter 4725.

Wellhead Protection Areas and Drinking Water Supply Management Areas

Wellhead Protection Areas (WHPAs) are areas surrounding public water supply wells that contribute groundwater to the well. In these areas, contamination on the land surface or in water can affect the drinking water supply. Drinking Water Supply Management Areas (DWSMAs) are areas containing the wellhead protection area but are outlined by clear

boundaries. The DWSMA is managed in a wellhead protection plan, usually by a city. DWSMA vulnerability is how likely it is that contamination in the DWSMA can reach the public water supply intake.

According to Minnesota Well Index online database, the majority of the combined project corridor (excluding approximately one mile of western-most portion) is located in a Wellhead Protection Area and deemed as a high vulnerability DWSMA (see Figure 10 in Appendix A). A wellhead protection plan has been created by the City of Eagan for the wellhead protection area. Infiltration is not acceptable in the high vulnerability DWSMA based on the Minnesota Department of Health (MDH) guidance due to the potential for adverse impacts to the aquifer.

b. Describe effects from project activities on water resources and measures to minimize or mitigate the effects in Item b.1. through Item b.iv. below.

i. Wastewater – For each of the following, describe the sources, quantities and composition of all sanitary, municipal/domestic and industrial wastewater produced or treated at the site.

Not applicable.

1) If the wastewater discharge is to a publicly owned treatment facility, identify any pretreatment measures and the ability of the facility to handle the added water and waste loadings, including any effects on, or required expansion of, municipal wastewater infrastructure.

Not applicable.

2) If the wastewater discharge is to a subsurface sewage treatment systems (SSTS), describe the system used, the design flow, and suitability of site conditions for such a system.

Not applicable.

3) If the wastewater discharge is to surface water, identify the wastewater treatment methods and identify discharge points and proposed effluent limitations to mitigate impacts. Discuss any effects to surface or groundwater from wastewater discharges.

Not applicable.

ii. Stormwater

1.) Describe the quantity and quality of stormwater runoff at the site prior to and post construction. Include the routes and receiving water bodies for runoff from the site (major downstream water bodies as well as the immediate receiving waters).
2.) Discuss any environmental effects from stormwater discharges.
3.) Describe stormwater pollution prevention plans including temporary and permanent runoff controls and potential BMP site locations to manage or treat stormwater runoff.
4) Identify specific erosion control, sedimentation control or stabilization measures to address soil limitations during and after project construction.

<u>Stormwater</u>

Development of the proposed combined action will include a net increase of approximately 3.69 acres of impervious paved surface in the project area, which will increase stormwater runoff compared to current conditions. The impervious surfaces will be designed and

contoured to fit to natural topography, while shedding water to either side of the trail, which is hydraulically connected via small drainage structures. Though the addition of impervious surface will reduce the floodplain's capacity to absorb precipitation, the overall effect will be minimal because the impervious surface area will be dispersed over a long distance.

A near-continuous border of vegetation adjacent to the trail will slow runoff originating from the paved surface. Due to extreme constraints on the site limiting the use of filtration or infiltration treatment methods, off-site treatment within the watershed is being utilized as an alternative mitigation measure for the runoff from the impervious areas within this project.

Potential Erosion During Construction

During construction, silt fences will be in place and maintained to limit erosion and runoff from the newly graded surfaces that drain directly to the Minnesota River and its tributaries. Silt fences, along with other wildlife-friendly perimeter control practices, will remain in place until vegetation has been established along the shoulders and all disturbed areas. Wildlife-friendly bio-logs will also be used for additional perimeter control and will be removed after the site is stabilized as required by permitting agencies.

Mild side slopes and relatively flat areas will be mulched and disk-anchored. Side slopes steeper than a 1:3 ratio (one foot vertical to three feet horizontal) will be covered with a natural, netted-type erosion control blanket. Wildlife-friendly erosion control and sediment control Best Management Practices (BMPs) will be installed as necessary to minimize erosion from disturbed surfaces and capture sediment on site and will meet MPCA's National Pollutant Discharge Elimination System/State Disposal System (NPDES/SDS) General Construction Storm Water Permit requirements. Invasive species prevention and concrete washout and fuel or chemical tank best management practices are also included in the storm water pollution prevention plans (SWPPP). A SWPPP is a document that identifies all potential sources of pollution which may affect the quality of storm water discharges from a construction site.

Additional BMPs will be needed during construction due to the proximity of the project to state-listed impaired waters (Minnesota River) and trout streams (Black Dog Creek and Kennaley's Creek). Stabilization of all exposed soils areas will be initiated immediately to limit soil erosion. All necessary erosion control measures to stabilize the site will be fully installed within seven days after the construction activity in that portion of the site has temporarily or permanently ceased. A minimum of 30 feet, and an average of 50 feet, of undisturbed buffer zone between the top of the Minnesota River bank and the edge of the trail's impermeable surface will be maintained during construction; this undisturbed buffer zone will not be necessary where the proposed trail would utilize the existing gravel service roads under the Trunk Highway 77 (Cedar Avenue Bridge). A minimum of 100 feet of undisturbed buffer zone from all trout waters will be maintained to the maximum extent practicable during construction. Silt fences will be installed to delineate and maintain the buffer zone. Temporary sediment basins will not be utilized to treat construction runoff because disturbance will not exceed five acres in any one drainage area.

Using river level forecasts during construction, work would be adjusted in order to minimize environmental impacts to the construction area. In the event of river flooding during construction, all equipment and materials would be removed from the site when the three-

day river forecast elevation is at major flood stage. Disturbed soils and extra construction materials, such as uninstalled culverts and aggregate material, would be secured.

In November 2020, the City of Eagan determined that the project needed to comply with its volume control stormwater permitting requirement.

iii. Water appropriation – Describe if the project proposes to appropriate surface or groundwater (including dewatering). Describe the source, quantity, duration, use and purpose of the water use and if a DNR water appropriation permit is required. Describe any well abandonment. If connecting to an existing municipal water supply, identify the wells to be used as a water source and any effects on, or required expansion of, municipal water infrastructure. Discuss environmental effects from water appropriation. Identify any measures to avoid, minimize, or mitigate environmental effects from the water appropriation.

No dewatering is anticipated for the installation of trail features; however, this may be needed depending on the depth to the water table during portions of the construction. Dewatering is more likely to be needed for the crossing of the railroad, specifically related to placement of piers, which may be cast in place, rather than the augering of helical piers associated with the boardwalk portions of the trail. If dewatering is needed, it will be limited to the immediate area of need and of short duration. Discharge would be anticipated to be over land into the adjacent areas, although the use of filter socks and or settling tanks may be needed to ensure there is no discharge of sediment or erosion resulting from a concentrated discharge location. The need for dewatering will be determined by the contractor, who will also be responsible for obtaining the water appropriation permit, if the daily or annual volume of water withdrawal is sufficient to require one.

Ongoing visitor use could result in erosion, particularly if visitors go off-trail. Trail inspections will work to identify problem areas. Repairs will be conducted as needed.

iv. Surface Waters

a. Wetlands – Describe any anticipated physical effects or alterations to wetland features such as draining, filling, permanent inundation, dredging and vegetative removal. Discuss direct and indirect environmental effects from physical modification of wetlands, including the anticipated effects that any proposed wetland alterations may have to the host watershed. Identify measures to avoid (e.g., available alternatives that were considered), minimize, or mitigate environmental effects to wetlands. Discuss whether any required compensatory wetland mitigation for unavoidable wetland impacts will occur in the same minor or major watershed, and identify those probable locations.

<u>Anticipated Impacts</u>

The rail crossing bridge project will require work within wetland for the placement of piers to support the structure. This may require temporary impacts within the wetland, but typically structural components of these structures are not considered permanent impacts. Approaches to the crossing are proposed to be elevated boardwalk, which will also have temporary impacts during construction, but are not considered to be permanent impacts, and no mitigation for these components is required.

The river bottom trail project will utilize boardwalks where feasible, but the majority of the alignment will be paved and will require filling of wetlands at various locations in order to provide a stable base for the trail, as well as to ensure that the trail grade does not exceed

five percent and complies with the Americans with Disabilities Act. Wetland fill is currently estimated to be approximately 1.07 acres for the proposed 3.3-mile trail corridor.

Wetland Avoidance, Minimization and Mitigation

Draft conceptual plans for the trail were developed as part of the early design process. The trail alignment shown on these plans was designed to avoid known high value natural resources as well as to keep the trail on high ground. Upon completion of the wetland delineation, the proposed trail alignment was adjusted to avoid and minimize wetland impacts. Where feasible, the use of boardwalks has been incorporated to span areas where there may be channels or where the trail will span an entire wetland. Boardwalks utilize smaller piers or anchors to support the decking and avoid the need for fill other than at transitional areas to maintain the required trail slopes. For these reasons, boardwalks are not considered permanent wetland impacts, and do not require mitigation.

Unavoidable wetland losses will be mitigated as required by the Wetland Conservation Act (WCA). On-site mitigation is not planned, instead wetland credits are planned to be purchased from a wetland bank approved by the Board of Water and Soil Resources (BWSR) and U.S. Army Corps of Engineers. Any impacts identified for Rare Natural Communities could require enhanced mitigation beyond standard wetland bank credits; this will be assessed in permitting. Dakota County (project proposer) will continue coordination with wetland regulatory agencies.

Wetland Conservation Act Special Considerations

WCA contains special considerations for species that are listed as endangered or threatened, and for plant communities that are identified as rare natural communities. The considerations are provided below. Also see Item 13 for additional discussion.

> MN Rules 8420.0515 SPECIAL CONSIDERATIONS.
>
> Subp. 2. Endangered and threatened species. A replacement plan for activities that involve taking species listed as endangered or threatened in parts 6134.0200 to 6134.0400 must be denied unless the commissioner issues a permit under part 6212.1800 or Minnesota Statutes, section 84.0895, subdivision 7. Applicants may identify if there are known locations of listed species at a particular site by contacting the Department of Natural Resources' natural heritage and nongame research program.
>
> Subp. 3. Rare natural communities. A replacement plan for activities that involve the modification of a rare natural community as determined by the Department of Natural Resources' natural heritage program must be denied if the local government unit determines that the proposed activities will permanently adversely affect the natural community.

Wetland Effects

Wetlands provide numerous beneficial services for people, fish and wildlife including protecting and improving water quality, providing wildlife habitat, storing floodwaters and maintaining surface water flow during dry periods. Fill-related wetland effects within delineated wetland boundaries include loss of wildlife habitat and wetland function. Broader effects include floodplain storage loss, increased surface water runoff, some loss of recharge

area, and changes to local drainage patterns. Wetland effects have the potential to impact threatened and endangered species such as the Blanding's Turtle. Some wetlands may require a Rare Natural Community determination pursuant to WCA. See Item 13 for more detail on these potential effects and how they will be avoided.

The river bottom trail project would require filling of wetlands at various locations in order to provide a stable base for the trail, and to ensure the trail grade does not exceed five percent and is ADA-compliant. Total wetland fill is estimated to be 1.07 acres for the 3.3-mile trail corridor.

Rare Natural Communities

BWSR, in consultation with the MnDNR, has adopted rules (above) governing the evaluation of wetland replacement plans covering impacts to rare natural communities. Within the project area, two native plant communities were identified previously. These communities include a Bulrush Marsh and a Calcareous Fen.

The river bottom trail project proposes to affect wetlands that have been mapped by the MnDNR as meeting the criteria to be considered Rare Natural Communities. However, a survey was completed during the summer of 2020 and found that the communities are not present within trail corridor. Impacts to these resources are not anticipated as part of the river bottom trail project.

Confirmation on this finding that these resources may not be present may include a field review of the study area in coordination with the WCA Technical Evaluation Panel and project proposer. The final determination regarding the presence or absence of a Rare Natural Community would be made by the Director of the MnDNR Division of Ecological and Water Resources. If the wetland is determined to qualify as a Rare Natural Community, the MnDNR, as the Local Governmental Unit (LGU) for WCA when the project is located on MnDNR property, will determine whether trail construction would have a permanent adverse effect on those rare natural communities and any additional mitigation measures that would be required.

b. Other surface waters – Describe any anticipated physical effects or alterations to surface water features (lakes, streams, ponds, intermittent channels, county/judicial ditches) such as draining, filling, permanent inundation, dredging, diking, stream diversion, impoundment, aquatic plant removal and riparian alteration. Discuss direct and indirect environmental effects from physical modification of water features. Identify measures to avoid, minimize, or mitigate environmental effects to surface water features, including in-water Best Management Practices that are proposed to avoid or minimize turbidity/sedimentation while physically altering the water features. Discuss how the project will change the number of type of watercraft on any water body, including current and projected watercraft usage.

There are no anticipated physical effects or alternations to any surface water features.

Proposed Water Crossings

The trail will require installation of culverts as it crosses a few forced low areas that drain to the Minnesota River. Current engineering designs propose larger water crossings over defined channels to be accomplished with use of a boardwalk, to ensure there is no net loss

of channel cross-sectional area, thereby minimizing impacts to pre-construction hydrology, including water levels and hydroperiod.

Dakota County estimates that 10 to 13 culverts with a diameter between 12 and 27 inches will be required across the entire project. These smaller drainage structures are not located in a defined drainage channel and will be used to equalize flow and to provide hydrologic connectivity between the two sides of the trail, so that effects on the pre-construction hydrology, including water levels and hydroperiod, are minimized to the extent possible.

Anticipated Impacts

The project would affect surface water resources during construction. The trail would extend along the Minnesota River, and is proposed to cross Black Dog Creek, Kennaley's Creek and forced low areas.

Potential temporary effects include physical changes to surface waters due to temporary re-routing of localized drainage during culvert installation, increased turbidity, erosion and sedimentation, and changes to hydrology.

Current engineering designs propose larger water crossings be accomplished with a boardwalk.

Question #12: Contamination/Hazardous Materials/Wastes

a. Pre-project site conditions – Describe existing contamination or potential environmental hazards on or in close proximity to the project site such as soil or ground water contamination, abandoned dumps, closed landfills, existing or abandoned storage tanks, and hazardous liquid or gas pipelines. Discuss any potential environmental effects from pre-project site conditions that would be caused or exacerbated by project construction and operation. Identify measures to avoid, minimize or mitigate adverse effects from existing contamination or potential environmental hazards. Include development of a Contingency Plan or Response Action Plan.

Potential Environmental Hazards

A Limited Phase I Environmental Site Assessment (ESA) was completed by Wenck Associates, Inc. in August 2020 to provide information on potentially contaminated properties within the combined project impact area and vicinity. This work followed MnDOT Office of Environmental Stewardship's Environmental Investigation Unit guidelines. This review area included the combined construction limits and a 500-foot buffer area. Potentially contaminated properties were identified through review of historic land use records and aerial photographs, federal Environmental Protection Agency (EPA), MPCA, and county/city records, as well as through reconnaissance of current property conditions. MnDOT

categorizes sites of potential concern identified by the Limited Phase I ESA into high[2], medium[3], and low[4] environmental risk levels.

The Limited Phase I ESA completed for this proposed combined action identified a total of three sites of environmental concern located within or adjacent to the combined project area (see Table 7). Of these, two were ranked as high risk and none were ranked as medium risk. High- and medium-risk sites with documented and suspected releases have the potential to adversely affect groundwater and soil within construction areas. The figure in Appendix D provides the location of the high risk sites of concern.

Table 7 – Known or Potentially Contaminated Properties That May Be Affected by the Combined Proposed Action

Site Name	Rank	Address/Rationale for Ranking
Nichols Groundwater VOC Plume	High	Concentrations of PCE, 1,1,1-trichloroethane, dioctyl phthalate have been measured in groundwater. A plume map from Dakota County indicates it originated from Instant Testing (south of Cedar Avenue and Sibley Memorial Highway) and extends onto the Project Corridor.
Seneca Groundwater VOC Plume	High	Concentrations of methylene chloride and TCE have been measured in groundwater. A plume map from Dakota County indicates it originated from Finishing Equipment (formerly 3640 Kennebec Drive) and extends onto the Project Corridor.
Seneca Ash Landfill	Low	Located at the intersection of Blackhawk Road and Sibley Memorial Highway, approximately 0.23 miles southwest of the Project Corridor. The site has been in closure monitoring the last 5 to 6 years.

Notes: Volatile Organic Compounds (VOC), Tetrachloroethylene (PCE) and Trichloroethylene (TCE).
Source: Wenck Associates, Inc., Limited Phase I Environmental Site Assessment, Fort Snelling Greenway Trail, Eagan, Minnesota, August 2020.

An Environmental File Review was also completed by SEH in December 2020 (see memorandum in Appendix D).

Impacts from contaminated properties will be mitigated by 1) modifying the project design where warranted, and/or 2) avoiding encountering contaminated materials during construction. If contaminated materials cannot be avoided, a plan will be developed to properly handle and treat any contaminated materials encountered during project construction in accordance with applicable state and federal regulations.

b. Project related generation/storage of solid wastes – Describe solid wastes generated/stored during construction and/or operation of the project. Indicate method of disposal. Discuss potential environmental effects from solid waste handling, storage and

[2] In general, sites with high environmental risks are properties that have documented releases of chemicals or hazardous or regulated substances (e.g., active and inactive state and federal cleanup sites, active and inactive dump sites, and active leaking underground storage tank sites), strong evidence of contamination (e.g., soil staining, stressed vegetation), or storage of large volumes of petroleum or other chemicals (e.g., bulk storage tank facilities).
[3] Sites of medium environmental risk are properties at which smaller volumes of petroleum, chemicals, or hazardous materials are frequently stored and used (e.g., registered underground and aboveground storage tanks, vehicle repair facilities, metal working shops), but at which no evidence of spills or releases exists, or properties with documented releases that have been "closed" (signifying no further cleanup actions deemed necessary) by the MPCA. Closed sites, such as closed leaking underground storage tank sites, are considered medium risks because residual soil or groundwater contamination may exist.
[4] Low environmental risk sites include properties at which minor volumes of chemicals or hazardous materials have been used or stored (e.g., hazardous waste generators, and possibly some farmsteads and residences).

disposal. Identify measures to avoid, minimize or mitigate adverse effects from the generation/storage of solid waste including source reduction and recycling.

All regulated solid wastes generated by construction of the proposed combined action will be disposed of properly in a permitted, licensed solid waste facility or a similarly regulated facility elsewhere.

c. Project related use/storage of hazardous materials – Describe chemicals/hazardous materials used/stored during construction and/or operation of the project including method of storage. Indicate the number, location and size of any above or below ground tanks to store petroleum or other materials. Discuss potential environmental effects from accidental spill or release of hazardous materials. Identify measures to avoid, minimize or mitigate adverse effects from the use/storage of chemicals/hazardous materials including source reduction and recycling. Include development of a spill prevention plan.

The proposed combined action would not generate any toxic or hazardous materials. However, fuels, antifreeze, and hydraulic oils would be used in some equipment for construction, operations and maintenance activities. Accidental spills of fuel used for motorized tools or equipment during construction and maintenance are possible. Construction and maintenance related fueling would occur away from streams, wetlands and surface waters. Equipment operators perform routine inspections on stock and equipment to ensure proper working order and do not have any leaks or signs of corrosion. Construction and maintenance crews would carry appropriately sized spill kits and immediately contain and clean up all spills. All wastes from spill cleanups would be properly disposed off-site. The contractor would be required to abide by the Pollution Prevention Management Measures (Part IV.F.2) of the NPDES Construction Stormwater Permit.

No above ground or below ground storage tanks are proposed with the combined project. Motorized equipment to be used on this project must be equipped with spark arrestors.

d. Project related generation/storage of hazardous wastes – Describe hazardous wastes generated/stored during construction and/or operation of the project. Indicate method of disposal. Discuss potential environmental effects from hazardous waste handling, storage, and disposal. Identify measures to avoid, minimize or mitigate adverse effects from the generation/storage or hazardous waste including source reduction and recycling.

No above- or below-ground storage tanks are planned for permanent use in conjunction with the proposed combined action. Temporary storage tanks for petroleum products may be located in the project area for construction equipment during trail and bridge construction. Appropriate measures would be taken during construction to avoid spills that could contaminate groundwater or surface water in the project area. In the event that a leak or spill occurs during construction, appropriate action to remediate the situation would be taken immediately in accordance with MPCA guidelines and regulations.

Question #13: Fish, Wildlife, Plant Communities, and Sensitive Ecological Resources (Rare Features)

a. Describe fish and wildlife resources as well as habitats and vegetation on or near the site.

Minnesota lies at the center of North America where the prairie, boreal forest, and eastern deciduous forest meet. There are four major ecological provinces in Minnesota: the Eastern

Broadleaf Forest, the Laurentian Mixed Forest, the Prairie Parkland and the Tallgrass Aspen Parklands. These ecological provinces are divided into subsections – distinct landscapes of Minnesota, defined by vegetation, geology, and other resource criteria.

According to the Minnesota Ecological Classification System, the proposed combined action is located within the Minnesota and Northeast Iowa Morainal section and the St. Paul Baldwin Plains subsection of the Eastern Broadleaf Forest Province. The St. Paul Baldwin Plains subsection is topographically low in comparison to other areas in the state and has undergone substantial disturbance associated with urban development. Presently, urban development is the primary land use of the subsection, but resettlement of the region was comprised of many plant communities, as is typical along morainal landforms. This subsection is dominated by a Superior lobe end moraine complex. The drainage network is poorly developed throughout most of the subsection, due to the nature of the landforms. There are many lakes in the subsection, and a well-developed floodplain associated with the Mississippi and St. Croix rivers. The St. Paul-Baldwin Plains and Moraines subsection includes much of the eastern half of the Twin Cities metropolitan area, including St. Paul and surrounding suburbs where urban land uses dominate. The Mississippi and St. Croix rivers have vital roles for wildlife in this subsection.

The combined project area consists of a range of habitats and vegetation types. Most of the site is comprised of wetland habitat, including floodplain forest, shrub-carr, shallow marsh, and sedge meadow. There are also areas of upland surrounding the wetland habitat, both woodland and grassland. Because of the proximity to the Mississippi River, the whole site is below the floodplain elevation of the river and is mostly unsuitable for development. This has allowed the site to be relatively less disturbed than the surrounding landscape. The majority of the site has not undergone extensive earthwork, however, invasive species are prevalent and the site is not considered pristine or native.

Fisheries

Fish commonly sought by anglers in the Minnesota River include channel catfish, flathead catfish, walleyes, northern pike and panfish. Fish populations are dominated, however, by fish such as sheepshead, buffalo, quillback, suckers, redhorse and carp (Waters, 1977). Habitat sufficient to support a fishery is not present along the trail and railroad overpass portions of the combined project, and changes to the Minnesota River fishery are not anticipated.

Wildlife

Resident wildlife species in the project area include raccoons, mink, muskrat, wood duck, deer, wild turkeys, rabbits, squirrels, fox, beaver, eagles and other raptors, and a variety of amphibians and reptiles. Tens of thousands of songbirds and waterfowl are attracted to the extensive wetlands in the valley as they make their annual migrations through the valley flyway and take advantage of extensive available habitat for breeding and year-round use.

Species in Greatest Conservation Need (SGCN)

SGCN are species identified as rare, declining, or vulnerable in Minnesota and their available habitats are declining in quality or extent. There are 149 species in SGCN that are known or predicted to occur within the St. Paul Baldwin Plains and Moraines, the second most of all

subsections in Minnesota. Areas important for SGCN include Battle Creek Park, Warner Nature Center, Lost Valley Prairie, Pig's Eye Island Heron Rookery, Gray Cloud Dunes, and Pine Bend Bluffs SNAs; Square Lake Park; and William O'Brien SP. The greatest threats to these SGCN included habitat loss or degradation, invasive species and competition and pollution. SGCN species in the Minnesota River Valley include a wide variety of birds, fish, mussels, and mammals, as well as the listed species discussed below.

Invasive Species

Multiple strategies (planting, seeding, bio-medium, natural recruitment) are expected to be used at the site. The project partners will initiate invasive plant control and other BMPs to reduce the risk of further exotic plant population invasion or expansion. Final planting and seeding will be completed immediately following construction activities to further reduce likelihood for undesirable plant colonization and recruitment. Initial on the ground invasive plant control activities are included in the proposed combined action.

Project-related construction and ongoing visitor use (once operational) can provide opportunities for the introduction and/or spread of invasive plant species. Invasive species can adversely affect wildlife habitat and lessen biodiversity, the latter due to invasive species outcompeting native plants. Soil disturbance due to construction, or unmanaged trail development or use, can provide conditions suitable for establishment of invasive plant species introduced to the site by animals, birds and wind, operator clothing, or on equipment, trucks, or bicycles originating from offsite infested areas. Materials such as gravel could provide seedstock for the introduction of invasive plant species to the combined project site. The combined project site has not been surveyed for the presence of invasive species.

The MnDNR Operational Order 113 provides guidance and directives applicable to agency staff and contractors for implementing site-level management to prevent or limit the introduction, establishment, spread, and treatment of invasive species. The MnDNR Division of Parks and Trails staff have guidelines prepared specifically for administering their lands and programs. Operational Order 59 provides guidance and governance for applying herbicides to all MnDNR staff and contractors. All herbicide applications would need to comply with labeling, safety protocols, and precautions as prescribed. Pesticide applications must and will be preceded by a Natural Heritage Information System (NHIS) database review to prevent endangered or threatened species or significant native plant communities from being harmed. Herbicide application will be in accordance with all applicable regulations and will be coordinated with landowners/managers.

The MnDNR Operational Order 113 provides guidelines to prevent or limit the introduction, establishment and spread of invasive species and contains procedures applicable to the proposed combined action. Invasive plant species in the combined project area include (but are not limited to) leafy spurge, garlic mustard and European buckthorn. Prevention measures include: assessing the project area for the presence of invasive species prior to initiating work; treatment of invasive species on the Minnesota Department of Agriculture's Eradicate and Control Lists before work begins; locating sources of weed-free materials; cleaning equipment before it arrives and departs; and re-vegetating disturbed areas as soon as possible. In accordance with the operational order guidelines, equipment will be inspected by the contractor with appropriate oversight from the lead engineer or other MnDNR staff before entering and leaving project sites, and equipment will be cleaned of any mud, dirt, aggregate material, mulch, plant parts (including seeds), and other invasive organisms. For

equipment entering and leaving a water body, water must be drained from equipment, tanks, or water retaining components of boats, motors, live wells and bilge. After leaving the water body, transom wells need to be drained on dry land away from surface waters.

After construction, the trail right-of-way will be monitored for invasive species. Suitable control measures will be employed when invasive plants are encountered. Intrusive species, i.e., those growing through bituminous trail surfaces, will be controlled to prevent pavement breakup and maintain safe trail conditions.

MnDNR guidance documents indicate a low to moderate risk level for the spread of invasive species along a paved trail. To minimize the potential of spreading invasive species, the newly constructed trail segments will be monitored during the first year after construction, and periodically thereafter, consistent with the management of other trail segments. A prescribed fescue mix, also known as a "low mow mix," will be used, where appropriate, on the trail shoulders to reduce the opportunity for invasive species to become established. A reduction in mowing helps to reduce the risk of spreading seeds and viable plant fragments.

b. Describe rare features such as state-listed (endangered, threatened, or special concern) species, native plant communities, Minnesota County Biological Survey Sites of Biodiversity Significance, and other sensitive ecological resources on or within close proximity to the site. Provide the license agreement number (LA-_) and/or correspondence number (**ERDB 20140399-0003**) from which the data were obtained and attach the Natural Heritage letter from the DNR. Indicate if any additional habitat or species survey work has been conducted within the site and describe the results.

The Minnesota NHIS database was queried by MnDNR Natural Heritage Review staff to determine what rare, threatened, or endangered plant or animal species or other significant natural features are known to occur within or near the proposed combined action. The Natural Heritage letter dated August 21, 2019 is included in Appendix E. Based on the query, rare features have been documented within the search area.

Ecologically Significant Areas

The proposed trail crosses and is adjacent to multiple native plant communities. A native plant community is a group of native plants that interact with each other and with their environment in ways not greatly altered by modern human activity or by introduced organisms. Native plant communities are classified and described by considering vegetation, hydrology, landforms, soils, and natural disturbance regimes. The proposed trail crosses through the following native plant communities:

- Southern Terrace Forest
- Bulrush Marsh (Northern)
- Calcareous Fen (Southeastern)

Multiple calcareous fens have been documented in the vicinity of the proposed combined action. A calcareous fen is a rare and distinctive peat-accumulating wetland that is legally protected in Minnesota. The Wetlands Conservation Act, authorized by Minnesota Statutes, section 103G.223, states that calcareous fens may not be filled, drained, or otherwise degraded, wholly or partially, by any activity, except as provided for in a management plan

approved by the commissioner of the MnDNR. Many of the unique characteristics of calcareous fens result from the upwelling of groundwater through calcareous substrates. Because of this dependence on groundwater hydrology, calcareous fens can be affected by nearby activities or even those several miles away. The following fens have been documented within a mile of the project:

- Nicols Meadow Fens (ID# 243, 20942 & 20943) contains the following state-listed plants:
    - Sterile sedge (*Carex sterilis*) – Threatened
    - Tuberous Indian-plantain (*Arnoglossum plantagineum*) – Threatened
    - Edible valerian (*Valeriana edulis var. ciliate*) – Threatened
    - Whorled nutrush (*Scleria verticillata*) – Threatened
    - Hair-like beak rush (*Rhynchospora capillacea*) – Threatened
    - Stream parsnip (*Berula erecta*) – Threatened
    - Twig rush (*Cladium mariscoides*) – Special Concern
    - Small white lady's-slipper (*Cypripedium candidum*) – Special Concern
- Gun Club Lake South Fen (ID# 244) contains the following state-listed species:
    - Sterile sedge (*Carex sterilis*) – Threatened
    - Edible valerian (*Valeriana edulis var. ciliate*) – Threatened
    - Small white lady's-slipper (*Cypripedium candidum*) – Special Concern
- Black Dog Lake North Fen (ID# 16550) contains the following state-listed species:
    - Sterile sedge (*Carex sterilis*) – Threatened
    - Edible valerian (*Valeriana edulis var. ciliate*) – Threatened

<u>State-Listed Species</u>

The MnDNR identified the following state-listed species that have been documented in the vicinity of the proposed action.

- Blanding's turtles (*Emydoidea blandingii*) – Threatened
- Several state-listed fish and mussels have been documented in the Minnesota River
- Bell's vireo (*Vireo bellii*) – Special Concern

As noted above, the MnDNR identified several state-listed species (listed below) that may be impacted by the combined proposed action and recommended that a botanical survey be completed prior to any construction activities (see correspondence in Appendix E).

- Sterile sedge (*Carex sterilis*) – Threatened
- Tuberous indian-plantain (*Arnoglossum plantagineum*) – Threatened
- Edible valerian (*Valeriana edulis var. ciliate*) – Threatened
- Whorled nutrush (*Scleria verticillata*) – Threatened
- Hair-like beak rush (*Rhynchospora capillacea*) – Threatened
- Stream parsnip (*Berula erecta*) – Threatened
- Twig rush (*Cladium mariscoides*) – Special Concern
- Small white lady's slipper (*Cypripedium candidum*) – Special Concern

Appendix E contains a memorandum that summarizes the results of a state-listed species survey and habitat assessment that was conducted within the proposed trail alignment on June 30, 2020 and August 6, 2020 for the proposed combined action. No state-listed species were observed within the survey limits.

Federally-Listed Species

In accordance with the Endangered Species Act of 1973, the proposed combined action underwent a Section 7 review by the MnDOT Office of Environmental Stewardship and the U.S. Fish and Wildlife Service. The completed review is included in the river bottom trail project's federal environmental review (Categorical Exclusion) document. A copy of the review is also included in Appendix F for informational purposes.

c. Discuss how the identified fish, wildlife, plant communities, rare features and ecosystems may be affected by the project. Include a discussion on introduction and spread of invasive species from the project construction and operation. Separately discuss effects to known threatened and endangered species.

Plant Community and Ecosystem Impacts

The specific native plant community (NPC) types that are identified in the proposed combined action and may be impacted by the trail development are included in the Table 8. The estimated acreages reported below are the total NPC areas within the combined project area and do not represent the actual acres that may be impacted by the proposed trail development. Actual impacts are expected to be much less based on the actual construction footprint. Efforts will be made to minimize impacts to NPC through assessments prior to each construction phase. For example, trail alignments may be adjusted to avoid rare species and mature trees, as necessary. Vegetation clearing and the constructed trail itself will cause some habitat fragmentation, particularly in areas where continuous blocks of habitat exist.

Table 8 – Native Plant Communities within the Project Area

NPC Code	Native Plant Community	Conservation Status Rank*	Estimated Acres Located within 20 Feet of the Project Area
FFs59	Southern Terrace Forest	S1, S2, S3	7.31
MRn93a	Bulrush Marsh (Northern)	S3	0.22
OPp93c	Calcareous Fen (Southeastern)	S1	4.62
		Total	**12.16**

*Native plant communities with a conservation status rank of S1, S2, or S3 are considered rare in Minnesota.

Impacts to MRn93a – Bulrush Marsh and OPp93c – Calcareous Fen both rare native plant communities in Minnesota, are possible from the proposed combined action. The corridor was surveyed in June and August of 2020 and neither habitat was located within the project limits, and so impacts are considered unlikely (see Appendix E).

Impacts to wetlands within the project area include an estimated 1.03 acres of direct wetland impact, based on the delineation data for the project area. These impacts will be due to the placement of fill to allow for the trail to be constructed on stable soils. Additionally, there may be some secondary impacts to closed wetland basins due to hydrologic modification of the larger wetland complex. Some portions of the proposed trail have the potential to interrupt water flow at higher water levels, both as the Minnesota River rises and as it recedes. The permitting process will address additional mitigation strategies as necessary for wetland impacts. Specific mitigation strategies will be determined during the WCA process as well as through coordination with appropriate federal agencies.

Wetlands with a conservation status rank of S1, S2, or S3 or wetlands within MBS Sites of High Biodiversity Significance may qualify as rare natural communities under the Wetland Conservation Act. Wetlands that have the potential to be identified as a rare natural community will be further evaluated and addressed as described in Item 11.b.iv.a of this document.

Wildlife and associated habitat would be affected by project-related construction, and trail maintenance and usage when complete. Potential environmental effects include: changes in ground habitat due to limited removal of trees and understory vegetation along the trail; accidental introduction of invasive species; and human-related disturbance during construction, operation, and maintenance of the trail. Construction-related effects would be temporary, while disturbance effects associated with trail use would be ongoing and vary as a function of the level of site use.

Measures incorporated into the project to minimize effects to wildlife and habitat include: leaving most of the tree canopy intact; aligning the trail to minimize loss of mature trees; minimizing impacts to ecologically significant areas to the extent practicable; and controlling the potential introduction and spread of invasive plant species.

Oak wilt can be introduced to the site when trees are wounded by construction activities. Sap from wounds can attract infected beetles to the tree. To avoid the spread of oak wilt, clearing and other activities presenting the potential to injure oak trees would take place during the August to March period, which is the lower risk time of year. Transport of all ash tree plant material would follow county ash tree quarantine area restrictions.

Emerald ash borer can be introduced or spread by improper handling and management of infected tree materials. Transport of all ash tree plant material would follow Dakota County ash tree quarantine area restrictions.

Project-related impacts to wildlife habitat are subject to ongoing public regulatory authority under provisions in the MPCA-required Stormwater Pollution Prevention Plan (SWPPP) to minimize soil erosion and sedimentation, therefore lessening the potential adverse effects to wildlife. Minimizing cover type conversion would also address potentially adverse habitat effects.

The proposed combined action is not anticipated to alter the hydrological conditions in the surrounding area.

Species Impacts – State Threatened and Endangered Species

Blanding's turtles (Emydoidea blandingii)

Blanding's turtles need both wetland and upland habitats to complete their life cycle. Suitable Blanding's turtle habitat is known to exist in the combined project area. The types of wetlands used include ponds, marshes, shrub swamps, bogs, and ditches and streams with slow-moving water. Calm, shallow water bodies (Type 1-3 wetlands) with mud bottoms and abundant aquatic vegetation (e.g., cattails, water lilies) are preferred, and extensive marshes bordering rivers provide excellent habitat. Small temporary wetlands (those that dry up in the late summer or fall) are frequently used in spring and summer – these fishless pools are amphibian and invertebrate breeding habitat, which provides an important food source for Blanding's turtles. Blanding's turtles overwinter in the muddy bottoms of deeper marshes and ponds, or other water bodies where they are protected from freezing. There is the potential for limited direct mortality of Blanding's turtles during project construction, since some of the project is taking place within upland habitat adjacent to wetlands where Blanding's turtles are known to occur. There may also be some Blanding's turtle habitat impacts due to wetland fill areas and development within adjacent upland areas. See Item 13(d) of this document for information on measures that will be taken to avoid impacts to this species.

State-Listed Fish and Mussels in the Minnesota River

The MnDNR replied that several state-listed fish and mussels have been documented in the Minnesota River in the vicinity of the proposed combined action. These species are particularly vulnerable to deterioration in water quality, especially increased siltation. No work is proposed in the Minnesota River. See Item 13(d) of this document for information on measures that will be taken to avoid impacts to state-listed fish and mussel species.

Bell's vireo (Vireo bellii)

Bell's vireo prefers shrub thickets within or bordering open habitats such as grasslands or wetlands. This bird suspends its nests from forks of low branches of small trees or shrubs. See Item 13(d) of this document for information on measures that will be taken to avoid impacts to this species.

Sterile sedge (Carex sterilis)

Most populations of Sterile sedge are found in the mineral-rich calcareous fens. The project scope is not expected to impact any suitable Sterile sedge habitat and, as a result, the project is not expected to negatively impact this species. As noted previously, this species was not observed during the survey and habitat assessment that was conducted on June 30, 2020 and August 6, 2020. See Item 13(d) of this document for information on measures that will be taken to avoid impacts to this species.

Tuberous indian-plantain (Arnoglossum plantagineum)

In Minnesota, this species is largely restricted to native, moist prairies in the southern portion of the state. A few populations are found on bluff prairies where the soil is dry. Many of these habitats are found on old railroad rights-of-way. The project scope is not expected to impact any suitable Tuberous indian-plantain habitat and, as a result, the project is not expected to negatively impact this species. As noted previously, this species was not observed during the survey and habitat assessment that was conducted on June 30, 2020 and August 6, 2020. See Item 13(d) of this document for information on measures that will be taken to avoid impacts to this species.

Edible valerian (Valeriana edulis var. ciliate)

Considered rare in Minnesota, Edible valerian appears to favor a moist, sunny, calcareous habitat, including calcareous fens, wet meadows, and moist prairies. The project scope is not expected to impact any suitable Edible valerian habitat and, as a result, the project is not expected to negatively impact this species. As noted previously, this species was not observed during the survey and habitat assessment that was conducted on June 30, 2020 and August 6, 2020. See Item 13(d) of this document for information on measures that will be taken to avoid impacts to this species.

Whorled nutrush (Scleria verticillata)

Worled nutrush is entirely restricted to calcareous fens in the prairie regions of Minnesota, and seems to occur only in the better quality, least disturbed examples of this specialized plant community. The project scope is not expected to impact any suitable Whorled nutrush habitat and, as a result, the project is not expected to negatively impact this species. As noted previously, this species was not observed during the survey and habitat assessment that was conducted on June 30, 2020 and August 6, 2020. See Item 13(d) of this document for information on measures that will be taken to avoid impacts to this species.

Hair-like beak rush (Rhynchospora capillacea)

Hair-like beak rush is found in the mineral-rich calcareous fens. Within this habitat, Hair-like beak rush prefers the margins of calcareous fen pools and marl flats where competition is minimal. The project scope is not expected to impact any suitable Hair-like beak rush habitat and, as a result, the project is not expected to negatively impact this species. As noted previously, this species was not observed during the survey and habitat assessment that was conducted on June 30, 2020 and August 6, 2020. See Item 13(d) of this document for information on measures that will be taken to avoid impacts to this species.

Stream parsnip (Berula erecta)

Stream parsnip occurs in calcareous and hydrologically active settings, such as margins of small spring-fed streams and pools. Rarely does the species occur more than a few meters from where spring water flows from the ground. The project scope is not expected to impact any suitable Stream parsnip habitat and, as a result, the project is not expected to negatively impact this species. As noted previously, this species was not observed during the survey and habitat assessment that was conducted on June 30, 2020 and August 6, 2020. See Item 13(d) of this document for information on measures that will be taken to avoid impacts to this species.

Twig rush (Cladium mariscoides)

Twig rush can be found in fens, including calcareous fens that have been historically identified near the project limits. The project scope is not expected to impact any suitable Twig rush habitat and, as a result, the project is not expected to negatively impact this species. As noted previously, this species was not observed during the survey and habitat assessment that was conducted on June 30, 2020 and August 6, 2020. See Item 13(d) of this document for information on measures that will be taken to avoid impacts to this species.

Small white lady's slipper (Cypripedium candidum)

Habitat of the Small white lady's slipper is primarily deep-soil mesic prairies. Wet prairies, certain types of sedge meadows, and calcareous fens can also support this species. The project scope is not expected to impact any suitable Small white lady's slipper habitat and, as a result, the project is not expected to negatively impact this species. As noted previously, this species was not observed during the survey and habitat assessment that was conducted on June 30, 2020 and August 6, 2020. See Item 13(d) of this document for information on measures that will be taken to avoid impacts to this species.

Species Impacts – Federally Protected Species

Bald eagles (Haliaeetus leucocephalus)

Bald eagles are federally protected under the Migratory Bird Treaty Act and under the Bald and Golden Eagle Protection Act. Both acts prohibit killing, selling, or otherwise harming eagles, their nests, or eggs. The combined project site includes habitat suitable for bald eagles with known active and alternate bald eagle nest trees in the area. The MnDOT Office of Environmental Stewardship Wildlife Ecologist and Dakota County's consultant (SEH) surveyed the majority of areas where tree clearing is anticipated for bald eagle nests via a ground-based survey on November 24, 2020. No nests were observed; however, it was determined that the site includes habitat with high risk of eagle nesting. Given the length of the combined proposed action and access limitations, the entire corridor was not surveyed for bald eagles. No removal of active or alternate bald eagle nest trees would occur as part of the proposed combined action. Construction activity could result in physical, visual, and noise disturbance effects to this species, especially from February 15 to August 15 when eagles are most sensitive to disturbance. These impacts would be temporary and limited to times when construction occurs.

Rusty-patched bumble bee (Bombus affinis)

A portion of the proposed combined action is within a USFWS identified High Potential Zone (HPZ), but habitat within this portion of the project area consists of disturbed wooded and open areas dominated by invasive species (buckthorn and reed canary grass and smooth brome, respectively) with low potential for floral resources or nesting. The area is frequently inundated with flood waters and is unlikely to be suitable habitat for hibernation. Rusty-patched bumble bee (RPBB) observations occur within two miles from the project area, within a park setting. Tree clearing associated with this combined project may include scattered trees and brush along the proposed trail corridor.

Little is known about RPBB nesting and overwintering site selection (USFWS 2016) but based on current knowledge of RPBB nesting and overwintering site selection it's unlikely that the areas proposed for impacts along the project corridor would be used by RPBB for hibernation or nesting due to compacted and/or hydric soils, heavy understory vegetation, and limited foraging resources.

Based on the project scope and the justification provided above, it has been determined that activities are not anticipated to result in incidental take and/or significant modification or degradation to suitable habitat. The provisions of the federal Endangered Species Act have been satisfied by a Section 7 determination, per written correspondence with the USFWS, of may affect, not likely to adversely affect threatened or endangered species or critical habitat, or may affect but will not cause prohibited take of the RPBB.

Northern long-eared bat (Myotis septentrionalis)

No documented Northern long-eared bat (NLEB) hibernacula and/or roost trees are documented within the combined project area. Documented records are located nearby on bridges, but proposed activities are not anticipated to result in incidental take and/or significant modification or degradation to suitable habitat. Any potential lighting work will meet bat-friendly conservation measures; all project activities on the portion of the proposed trail adjacent to the Minnesota River and Trunk Highway 77 (Cedar Avenue) will occur outside of the June 1 to August 15 NLEB pupping season; and tree clearing will be limited to less than 15 acres and will be conducted during the winter months during the NLEB's inactive season. The provisions of the ESA have been satisfied by a Section 7 determination, per written correspondence with the USFWS, of may affect, not likely to adversely affect threatened or endangered species or critical habitat, or may affect but will not cause prohibited take of the NLEB.

Higgins eye pearlymussel (Lampsilis higginsii)

The Higgins eye pearlymussel, an endangered species, is a freshwater mussel of larger rivers where it is usually found in deep water with moderate currents. No documented occurrences for these species exist within the action area. Suitable habitat is not anticipated to be impacted by the combined project. MnDOT, on behalf of the FHWA, has made a determination of no effect for this species.

Prairie bush clover (Lespedeza leptostachya)

Prairie bush clover, a threatened species, is a plant in the pea family and is native to tallgrass prairies of four Midwestern states: Iowa, Illinois, Minnesota and Wisconsin. It has a clover-like leaf comprised of three leaflets about an inch long and a quarter inch wide. Flowering plants are generally between nine and eighteen inches tall with the flowers loosely arranged on an open spike. The pale pink or cream colored flowers bloom in mid-July and the entire plant has a grayish-silver sheen. No documented occurrences for this species exist within the action area. Suitable habitat is not anticipated to be impacted by the combined project. MnDOT, on behalf of the FHWA, has made a determination of no effect for this species.

Invasive Species Impacts

There is a risk that project construction, operation and maintenance could lead to the introduction and spread of invasive species. This risk during the construction phase is primarily due to bringing equipment to the project area, bringing fill materials to the project area, movement of seeds and plant fragments within the site and through the disturbance of soil, which can provide an opportunity for invasive plants to take hold. Additional risks of invasive species spread include the spread of oak wilt due to tree injury and transport of infected emerald ash borer plant material.

The risk of introduction and spread of invasive species during the operations and maintenance phase is primarily tied to invasive plant seeds and plant material being transported to the site by trail users and maintenance equipment and the movement of seeds and plant fragments from one portion of the site to another by way of boots, bike tires and maintenance equipment.

d. Identify measures that will be taken to avoid, minimize, or mitigate adverse effects to fish, wildlife, plant communities, and sensitive ecological resources.

Plant Community and Ecosystem Impacts

Trail development will be carried out in a manner that emphasizes the avoidance of habitat of threatened and special concern species and other high quality habitat. Post construction, the trail will improve access to the project area for resource management activities such as invasive species control.

Efforts to reduce the impacts to wetlands include avoiding as many delineated wetlands as possible, thereby reducing impacts to these important areas. Additionally, the project partners to limit the fill sections to the narrowest corridor needed for construction of the trail. In instances where wetland hydrology will be bisected by the placement of fill, culverts will be placed to accommodate this flow and maintain hydrologic connectivity.

In addition, the following guidelines will be adhered to where possible in order to minimize disturbance:

- Minimize width of trail
- As much as possible, operate within already-disturbed areas
- Do not route trails through wet swales or depressions

- Bridge all stream and wetland crossings
- Minimize vehicular disturbance in the area (allow only vehicles/equipment necessary for construction activities)
- Do not park equipment or stockpile supplies in the area
- Do not place spoil within the area
- Use effective erosion prevention and sediment control measures
- Inspect and clean all equipment prior to bringing it to the site to prevent the introduction and spread of invasive species
- Trail maintenance plans should address erodible soils
- Use signage to encourage visitors to stay on designated trails
- Revegetate disturbed soil with native species suitable to the local habitat as soon after construction as possible
- Use only weed-free mulches, topsoils, and seed mixes

Species Impacts – State Threatened and Endangered Species

Blanding's turtles (Emydoidea blandingii)

The MnDNR's Turtle Construction Guidelines were provided with the MnDNR response letter that provides further construction impact minimization and protection measures for these turtles. These guidelines will be given to the construction contractors prior to the commencement of construction activities. Any positive sightings of these turtles in the project area prior to or during construction will be forwarded to the MnDNR.

If used, erosion control blanket will be limited to 'bio-netting' or 'natural netting' types, and specifically not products containing plastic mesh netting or other plastic components. These are Category 3N or 4N in the 2016 and 2018 MnDOT Standards Specifications for Construction. Be aware that hydro-mulch products may contain small plastic fibers to aid in its matrix strength. These loose fibers could potentially re-suspend and make their way into Public Waters impacting protected aquatic species (e.g., mussels, fishes).

The proposed combined action will avoid wetland impacts during hibernation season, between October 15th and April 15th, unless the area is unsuitable for hibernation (less than 14 inches deep).

Any dewatering in areas 14 inches or deeper will take place between May 15th and September 15th.

Culverts will be 36 inches or greater in diameter, at least twice as wide as the normal width of open water and have an elliptical or flat-bottom.

The contractor will monitor for turtles during construction and report any sightings to the MnDNR Regional Nongame Specialist, Michael Worland at 320-234-2550 or Michael.Worland@state.mn.us.

State-Listed Fish and Mussels in the Minnesota River

Effective erosion prevention and sediment control practices will be implemented and maintained near the Minnesota River and near any stream that flows into the river.

Bell's vireo (Vireo bellii)

If feasible, the proposed combined action will avoid trees and shrub removal from May 15th through August 15th to avoid disturbance or nesting birds.

Sterile sedge (Carex sterilis)

This species is not likely to be impacted due to its absence within the project limits, therefore, no specific minimization or mitigation measures are necessary.

Tuberous indian-plantain (Arnoglossum plantagineum)

This species is not likely to be impacted due to its absence within the project limits, therefore, no specific minimization or mitigation measures are necessary.

Edible valerian (Valeriana edulis var. ciliate)

This species is not likely to be impacted due to its absence within the project limits, therefore, no specific minimization or mitigation measures are necessary.

Whorled nutrush (Scleria verticillata)

This species is not likely to be impacted due to its absence within the project limits, therefore, no specific minimization or mitigation measures are necessary.

Hair-like beak rush (Rhynchospora capillacea)

This species is not likely to be impacted due to its absence within the project limits, therefore, no specific minimization or mitigation measures are necessary.

Stream parsnip (Berula erecta)

This species is not likely to be impacted due to its absence within the project limits, therefore, no specific minimization or mitigation measures are necessary.

Twig rush (Cladium mariscoides)

This species is not likely to be impacted due to its absence within the project limits, therefore, no specific minimization or mitigation measures are necessary.

Small white lady's slipper (Cypripedium candidum)

This species is not likely to be impacted due to its absence within the project limits, therefore, no specific minimization or mitigation measures are necessary.

Species Impacts – Federally Protected Species

Bald eagles (Haliaeetus leucocephalus)

Right-of-way surveyors will be made aware of eagle nest concerns. Any staking done ahead of physical construction will include direction to keep an eye out for eagle nests and to mark locations on maps and report to project management and MnDOT Office of Environmental Stewardship.

The contractor will make cursory inspections of the project area and trees prior to tree clearing to ensure new eagle nests have not been constructed. If large stick nests are detected, tree clearing must be delayed and coordination with MnDOT and the USFWS is required.

Rusty-patched bumble bee (Bombus affinis)

MnDOT and USFWS have not identified any additional measures that need to be taken to avoid, minimize, or mitigate adverse effects to this species.

Northern long-eared bat (Myotis septentrionalis)

Any potential lighting work will meet bat-friendly conservation measures; all project activities on the portion of the proposed trail adjacent to the Minnesota River and Trunk Highway 77 (Cedar Avenue) will occur outside of the June 1 through August 15 NLEB pupping season; and tree clearing will be limited to less than 15 acres and will be conducted during the winter months during the NLEB's inactive season.

Higgins eye pearlymussel (Lampsilis higginsii)

Suitable habitat is not anticipated to be impacted by the proposed combined action.

Prairie bush clover (Lespedeza leptostachya)

Suitable habitat is not anticipated to be impacted by the proposed combined action.

Invasive Species Prevention Measures

To reduce the risk of invasive species spread during each construction phase, contract language and oversight will ensure that all equipment will be cleaned prior to arriving at the project area. Additionally, all fill materials brought to the site will be clear of invasive species. Soil disturbance will be minimized, and disturbed areas will be revegetated as quickly as possible to avoid the establishment of invasive species. To avoid the spread of oak wilt, clearing and potential injury of oak trees will take place during the low risk time of year, from mid-July through March. Transport of all ash tree plant material will follow county ash tree quarantine area restrictions.

Best management practices and trail user education will be used to prevent invasive species spread during the operations and maintenance phase by trail users and maintenance equipment. Best management practices for trail maintenance include cleaning equipment prior to arriving and leaving the site, and also cleaning the equipment periodically along the trail to prevent spread within the trail corridor.

Question #14: Historic Properties

Describe any historic structures, archeological sites, and/or traditional cultural properties on or in close proximity to the site. Include: 1) historic designations, 2) known artifact areas, and 3) architectural features. Attach letter received from the State Historic Preservation Office (SHPO). Discuss any anticipated effects to historic properties during project construction and operation. Identify measures that will be taken to avoid, minimize, or mitigate adverse effects to historic properties.

Federal and state laws establish programs for the preservation of historic properties that ensure consideration of effects to those properties in the decision-making process for transportation projects. In June 2020, Dakota County contacted the MnDOT Cultural Resources Unit (CRU) as part of the required review process for FHWA-funded projects. Given the potential for FHWA funding for the rail crossing bridge project, MnDOT Metro District initially allowed the federal (FHWA) action for the proposed river bottom trail project to be broadly defined as both the proposed river bottom trail project (FHWA funding secured) and the rail crossing bridge project (potential FHWA-funding).

During October and November 2020, the 106 Group conducted a Phase I archaeological survey for the proposed combined action, which is summarized in the MnDOT CRU correspondence in Appendix F. While the archaeological survey and MnDOT CRU review was initially completed for the combined study area, it later became known that Dakota County's federal funding application for the rail crossing bridge project was not successful. This meant that FHWA was no longer the lead federal agency for the rail crossing bridge project. As noted in the correspondence in Appendix F, MnDOT CRU determined that there would be no historic properties affected by the proposed river bottom trail project.

Question #15: Visual

Describe any scenic views or vistas on or near the project site. Describe any project related visual effects such as vapor plumes or glare from intense lights. Discuss the potential visual effects from the project. Identify any measures to avoid, minimize, or mitigate visual impacts.

Trail users may experience intermittent scenic views of the Minnesota River along the trail corridor. No lighting is proposed for the trail corridor. No project related vapor plumes or glare from intense lights will occur with the proposed combined action.

Question #16: Air

a. Stationary source emissions – Describe the type, sources, quantities and compositions of any emissions from stationary sources such as boilers or exhaust stacks. Include any hazardous air pollutants, criteria pollutants, and any greenhouse gases. Discuss effects to air quality including any sensitive receptors, human health or applicable regulatory criteria. Include a discussion of any methods used to assess the project's effect on air quality and the results of that assessment. Identify pollution control

equipment and other measures that will be taken to avoid, minimize, or mitigate adverse effects from stationary source emissions.

Not applicable; the project would not introduce any stationary emission sources.

b. Vehicle emissions – Describe the effect of the project's traffic generation on air emissions. Discuss the project's vehicle-related emissions effect on air quality. Identify measures (e.g., traffic operational improvements, diesel idling minimization plan) that will be taken to minimize or mitigate vehicle-related emissions.

The combined project is not anticipated to generate a substantial increase in traffic-related air emissions during construction activities. A small increase in vehicle-related air emissions may be expected as a result of increased visitation by trail and other recreation users. The combined project is not expected to cause any substantial decrease in air quality.

Construction-related vehicle emissions will be minor and temporary in nature, arising from the use of equipment for trail and bridge construction and installation of culverts. Diesel fuel exhaust emissions contain pollutants including carbon monoxide, nitrogen oxides, reactive organic gases, sulfur dioxide, and suspended particulate matter, all of which carry some associated health risks.

c. Dust and odors – Describe sources, characteristics, duration, quantities, and intensity of dust and odors generated during project construction and operation. (Fugitive dust may be discussed under item 16a). Discuss the effect of dust and odors in the vicinity of the project including nearby sensitive receptors and quality of life. Identify measures that will be taken to minimize or mitigate the effects of dust and odors.

The combined proposed action would not generate substantial odors during construction. Potential odors would include exhaust from diesel engines and fuel storage. Dust generated during construction will be minimized through standard dust control measures such as applying water to exposed soils and limiting the extent and duration of exposed soil conditions. Construction contractors will be required to control dust and other airborne particulates in accordance with MnDOT specifications. After construction is complete, dust levels are anticipated to be minimal because all soil surfaces exposed during construction would be in permanent cover (e.g., paved or re-vegetated areas).

Question #17: Noise

Describe sources, characteristics, duration, quantities, and intensity of noise generated during project construction and operation. Discuss the effect of noise in the vicinity of the project including 1) existing noise levels/sources in the area, 2) nearby sensitive receptors, 3) conformance to state noise standards, and 4) quality of life. Identify measures that will be taken to minimize or mitigate the effects of noise.

Existing noise conditions in the combined project area consist of natural sounds (e.g., wind-blown vegetation, insects, and birds) and limited vehicle traffic.

Operation of the new trail is not expected to change the existing noise levels.

During construction and periodic maintenance activities, the project would create noise above existing conditions. Recreational users in the area may experience these temporary effects.

Noise from construction activities would occur during grade/treadway preparations, removal of felled trees, fill placement, bridge construction, culvert installation, subgrade preparation along the new corridor, paving operations, and associated trucking of materials and equipment. Operation of diesel tractors and medium-sized trucks would be the main source of construction noise. Operation of other hand tools or small equipment, such as chainsaws and brush cutters, may also generate noise during construction and periodic maintenance. Construction activities would occur during normal daylight hours.

Noise would be controlled by ensuring standard noise arrestors such as mufflers are properly installed on construction vehicles. Operation of construction equipment would be limited to several weeks at any given location and would occur only during daylight hours.

Question #18: Transportation

a. Describe traffic-related aspects of project construction and operation. Include: 1) existing and proposed additional parking spaces, 2) estimated total average daily traffic generated, 3) estimated maximum peak hour traffic generated and time of occurrence, 4) indicate source of trip generation rates used in the estimates, and 5) availability of transit and/or other alternative transportation modes.

There are two existing parking lots expected to be utilized by trail users:

- Cedar Nicols Trailhead at the Trunk Highway 77 (Cedar Avenue) Bridge
    - Approximately 21 parking spaces
- Lone Oak Road Trailhead near CSAH 26 (Lone Oak Road)
    - Approximately 15 parking spaces

No additional parking facilities are planned to be developed as part of the proposed combined action. The project partners do not expect an increase in traffic to result on the project large enough to require additional parking lots. Various bus routes serve major thoroughfares in the vicinity of the combined project area.

b. Discuss the effect on traffic congestion on affected roads and describe any traffic improvements necessary. The analysis must discuss the project's impact on the regional transportation system. *If the peak hour traffic generated exceeds 250 vehicles or the total daily trips exceeds 2,500, a traffic impact study must be prepared as part of the EAW.* Use the format and procedures described in the Minnesota Department of Transportation's Access Management Manual, Chapter 5 *(available at: http://www.dot.state.mn.us/accessmanagement /resources.html)* or a similar local guidance.

Traffic within and near the project area is not expected to change substantially as a result of the proposed combined action. Increased congestion is not anticipated due to the combined project, nor are traffic improvements expected to be needed.

c. Identify measures that will be taken to minimize or mitigate project related transportation effects.

Project related transportation effects are not anticipated. Any increase in traffic that potentially may occur is expected to be minor.

Question #19: Cumulative Potential Effects

(Preparers can leave this item blank if cumulative potential effects are addressed under the applicable EAW Items)

a. Describe the geographic scales and timeframes of the project related environmental effects that could combine with other environmental effects resulting in cumulative potential effects.

Scope of Cumulative Potential Effects

The purpose of the cumulative impacts analysis is to look at past, recent, and future actions to determine whether impacts from the individual projects, while insignificant on their own, could become significant when accumulated. The cumulative impacts analysis is limited to those resources, ecosystems, and human communities affected by the combined proposed action. The geographic scope of this analysis varies by the resource under examination, but in general is limited to an area in close proximity to the project limits. The focused scope of this analysis considers impacts to these resources from previous, current, as well as planned future projects.

Past Actions

Available historical information for the combined project corridor indicates that the corridor has been generally unimproved land. The western portion of combined project corridor was agricultural land from at least 1896 to approximately the late 1970s/early 1980s. A dwelling was located on the eastern-most portion of the combined project corridor from approximately 1953 to 1997. The land associated with the combined project corridor was acquired as Fort Snelling State Park in 1961 and officially opened in 1965.

The Union Pacific Railroad (previously Chicago – St. Paul Railroad) intersects the proposed regional trail alignment.

The proposed regional trail alignment seeks to connect the existing Cedar Nicols Trailhead at the Trunk Highway 77 (Cedar Avenue) Bridge and the existing Lone Oak Road Trailhead near CSAH 26 (Lone Oak Road).

The existing Lone Oak Road Trailhead near CSAH 26 (Lone Oak Road) was completed in 2018 and includes a parking lot and seasonal restroom facilities. The completed project also included the construction of approximately two miles of trail adjacent to Trunk Highway 13 (Sibley Memorial Highway) from Interstate 494 to approximately CSAH 26 (Lone Oak Road).

Wastewater treatment ponds are located north of the central portion of the combined project corridor and were constructed between 1957 and 1968. The existing stormwater retention ponds adjacent to the eastern portion of the combined project corridor appear to be gravel pits between 1957 and 1964 with some overlap on the combined project corridor on the 1964 aerial. The gravel pits were filled with water on the 1968 aerial photograph and appear to remain in the same use in subsequent aerial photographs.

The Kennaley's Creek trail bridge was built in the mid-1990s.

There is a recently improved (2020) MnDNR boat launch between Fort Snelling State Park and the Minnesota River National Wildlife Refuge on MnDOT property.

b. Describe any reasonably foreseeable future projects (for which a basis of expectation has been laid) that may interact with environmental effects of the proposed project within the geographic scales and timeframes identified above.

Dakota County, in partnership with the USFWS, MnDNR, MnDOT, and the cities of Burnsville and Eagan, is currently making improvements at the Cedar Nicols Trailhead at the Trunk Highway 77 (Cedar Avenue) Bridge. This federally-funded project (SP 019-090-022) is located on the east bank of the Minnesota River immediately upstream of Trunk Highway 77 (Cedar Avenue) Bridge in Burnsville. The project includes reconfiguration and rehabilitation of the trailhead parking lot, incorporation of a picnic area, minor road resurfacing, trail extension/connectivity, and vegetative reestablishment of a parking lot removed under the MnDNR's recent boat launch project. The improved trailhead facility will provide access to the Minnesota River Greenway at the Cedar Avenue Bridge over the Minnesota River. Upon project completion, there will be new trail connections to the Minnesota Valley National Wildlife Refuge – Black Dog Unit and Fort Snelling State Park. The Cedar Nicols Trailhead project started in 2020 and is anticipated to be completed by the end of 2021. No other projects are known to be proposed within the vicinity of the combined project at this time.

c. Discuss the nature of the cumulative potential effects and summarize any other available information relevant to determining whether there is potential for significant environmental effects due to these cumulative effects.

Impacts from the combined project are discussed throughout this document. The potential impacts to resources identified can be avoided or minimized through existing regulatory controls. During the development of this EAW, no potentially significant cumulative impacts to the resources affected by the combined project have been identified.

Question #20: Other Potential Environmental Impacts

If the project may cause any adverse environmental impacts not addressed by items 1 to 28, identify and discuss them here, along with any proposed mitigation.

Climate change in Minnesota is linked to an increase in intensity of rainfall events, which increases the severity of erosion caused by rainfall and flooding. Changing climate also disrupts existing patterns in temperature, rainfall, and daylight to which native species are adapted and may change environmental conditions to be more favorable to new, invasive species than they are to native species.

No additional adverse environmental impacts are anticipated other than those previously addressed or discussed.

RGU Certification

The Environmental Quality Board will only accept **SIGNED** Environmental Assessment Worksheets for public notice in the EQB Monitor.

I hereby certify that:

- The information contained in this document is accurate and complete to the best of my knowledge.
- The EAW describes the complete project; there are no other projects, stages or components other than those described in this document, which are related to the project as connected actions or phased actions, as defined at Minnesota Rules, parts 4410.0200, subparts 9b and 60, respectively.
- Copies of this EAW are being sent to the entire EQB distribution list.

Name and Title of Signer: Project Manager

Josh Kinney, PLA, ASLA
Dakota County Project Manager

Date: 06/01/2021

Environmental Assessment Worksheet was prepared by the staff of the Environmental Quality Board at Minnesota Planning. For additional information, worksheets or for *EAW Guidelines*, contact: Environmental Quality Board, 658 Cedar St., St. Paul, MN 55155, 651-296-8253, or www.mnplan.state.mn.us.

Appendix A

EAW Figures

Figure 1 – Project Location Map
Figure 2 – Minnesota River Greenway Regional Trail Overview Map
Figure 3 – U.S. Geological Survey Topographic Map
Figure 4 – NRCS Soils Map
Figures 5A-F – Wetland Review Map
Figure 6 – Preliminary Traffic Control Plan
Figure 7 – Minnesota Land Cover Classification System Map
Figure 8 – Existing Land Use Map
Figure 9 – Hydrological Features Map
Figure 10 – Wells and Wellhead Protection Area Map

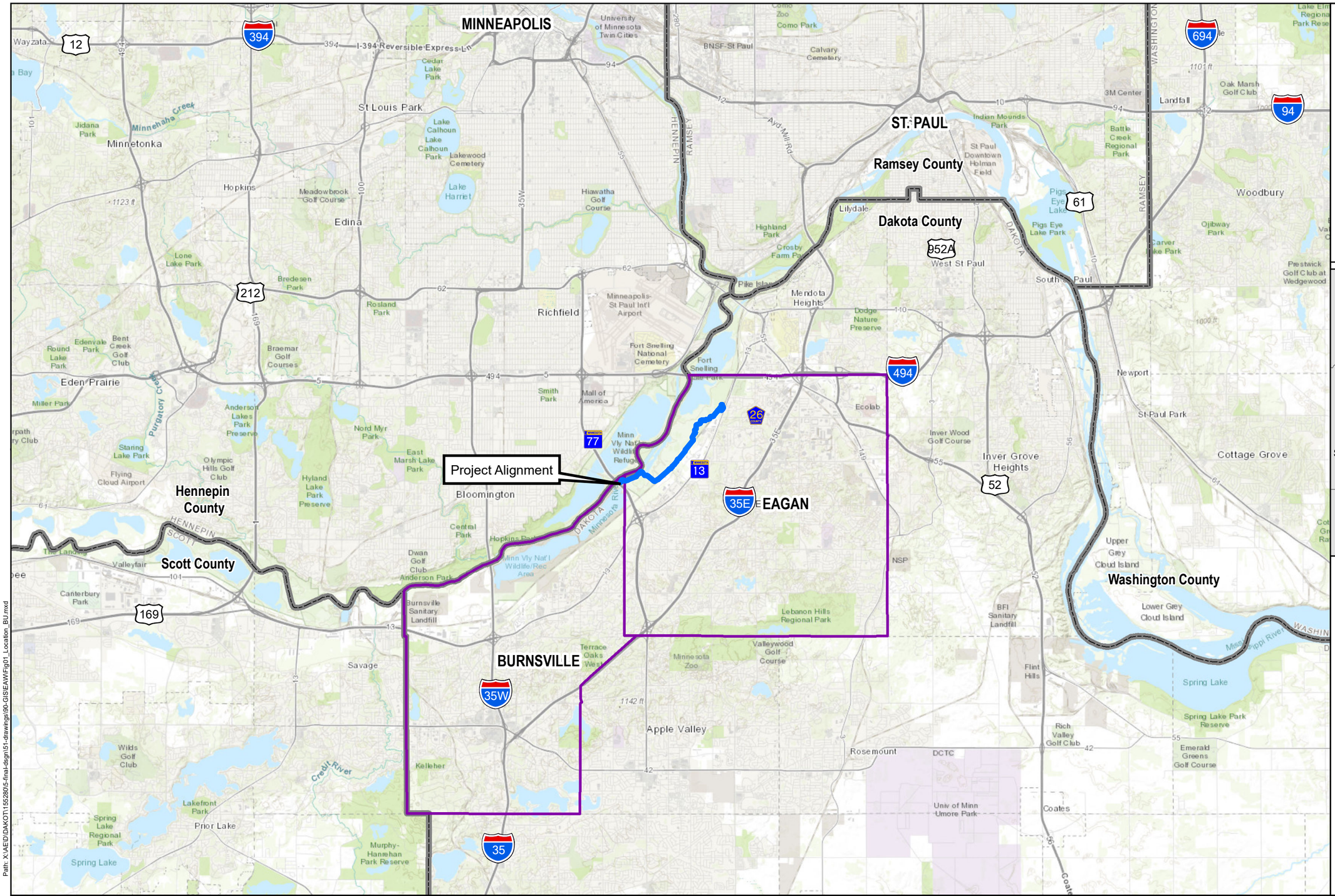

This map is neither a legally recorded map nor a survey map and is not intended to be used as one. This map is a compilation of records, information, and data gathered from various sources listed on this map and is to be used for reference purposes only. SEH does not warrant that the Geographic Information System (GIS) Data used to prepare this map are error free, and SEH does not represent that the GIS Data can be used for navigational, tracking, or any other purpose requiring exacting measurement of distance or direction or precision in the depiction of geographic features. The user of this map acknowledges that SEH shall not be liable for any damages which arise out of the user's access or use of data provided.

Path: X:\AE\D\DAKOT\155280\5-final-dsgn\51-drawings\90-GIS\EAWFig01_Location_BU.mxd

SEH
3535 VADNAIS CENTER DR.
ST. PAUL, MN 55110
PHONE: (651) 490-2000
FAX: (651) 490-2150
WATTS: 800-325-2055
www.sehinc.com

Project: DAKOT 155280
Print Date: 5/24/2021

User Name: msteuernagel
Projection: NAD 83 UTM Z 15N
Source: SEHinc, Dakota Co., MNDNR
Background: World Topographic Map

Minnesota River Greenway – Fort Snelling State Park Segment Trail

Site Location Map

Dakota County Minnesota

Figure 1

MINNESOTA RIVER GREENWAY



Future Minnesota River Greenway
Burnsville to Saint Paul

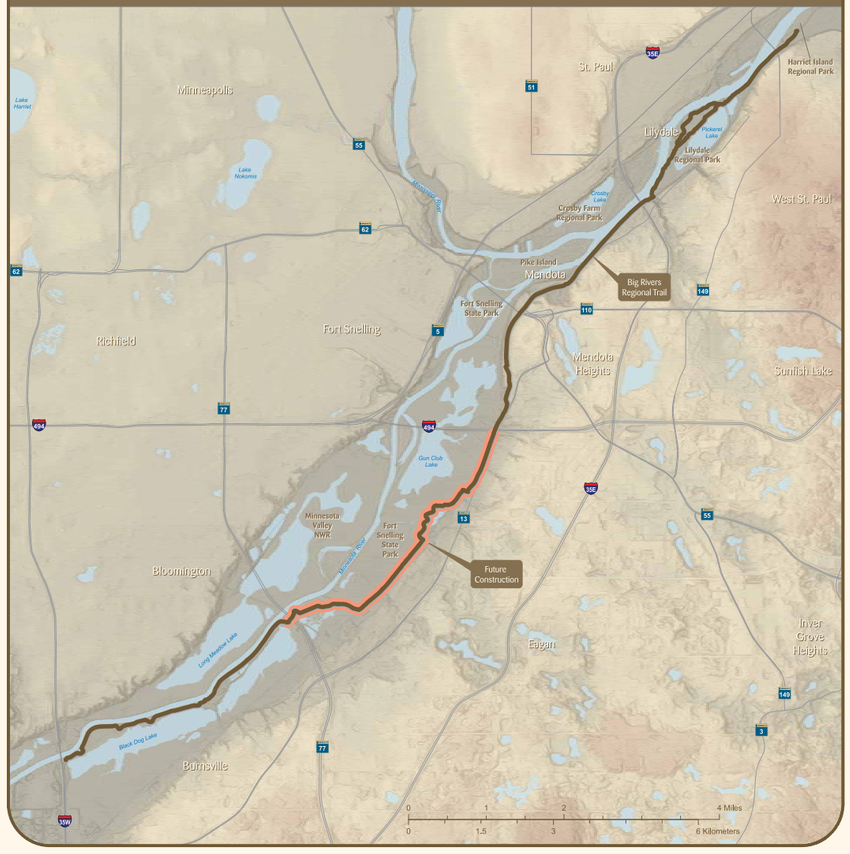

Activities & Amenities

- P Parking
- H Restroom
- T Portable Toilet
- W Drinking Water
- Trail Access
- PA Picnic Area
- Boat Launch
- Overlook
- M Interpretive Exhibit
- Bike Repair Station

Trails

- Regional Trail
- Paved Trails
- Unpaved Trails
- Railroad

Download a copy of this map.

Best experienced in the free Avenza Maps app.

Dakota County forever wild PARKS

Figure 2

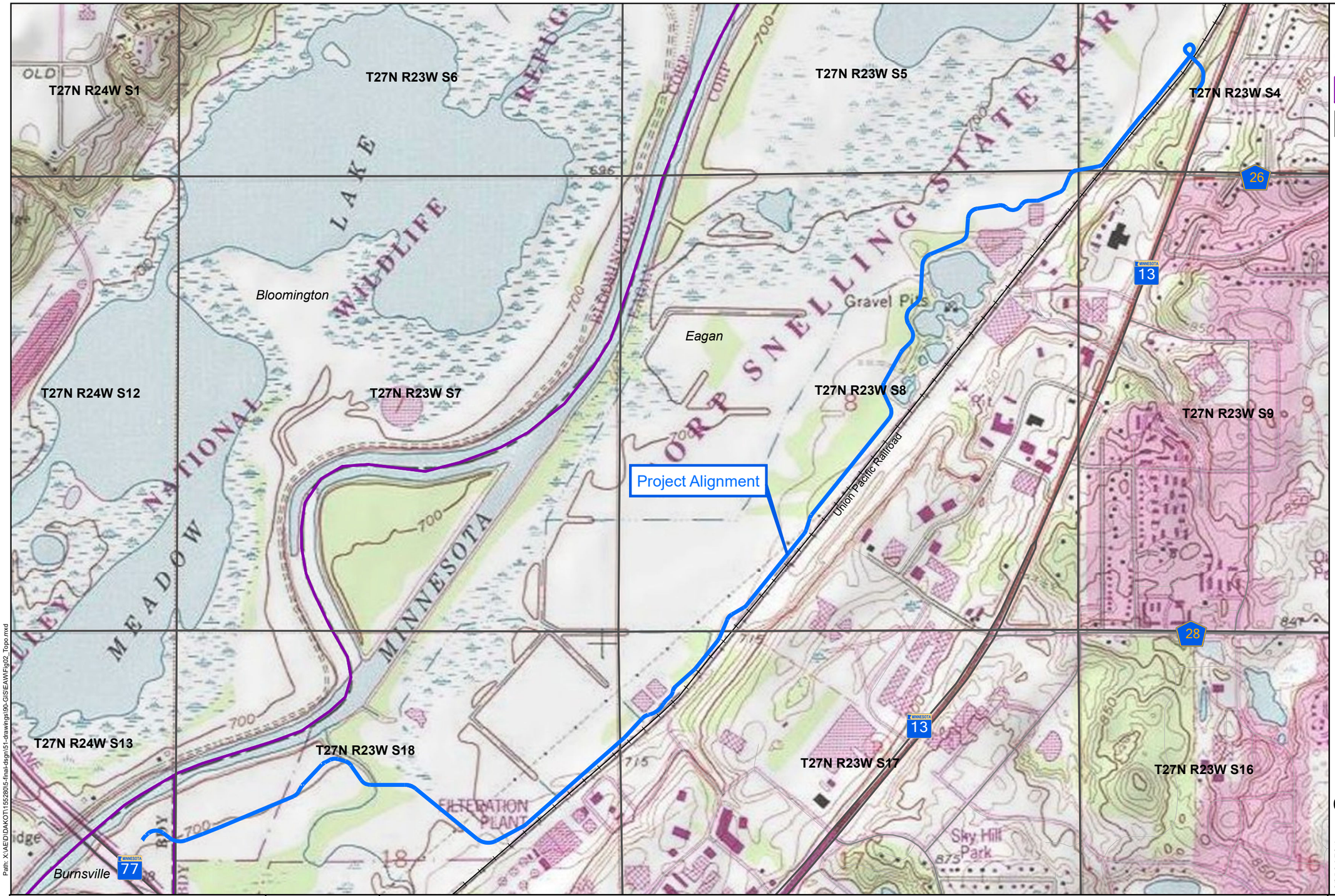

Legend

- Project Alignment
- City Boundary
- Township, Range, & Section

N
W E
S

0 0.1 0.2 0.4 Miles

This map is neither a legally recorded map nor a survey map and is not intended to be used as one. This map is a compilation of records, information, and data gathered from various sources listed on this map and is to be used for reference purposes only. SEH does not warrant that the Geographic Information System (GIS) Data used to prepare this map are error free, and SEH does not represent that the GIS Data can be used for navigational, tracking, or any other purpose requiring exacting measurement of distance or direction or precision in the depiction of geographic features. The user of this map acknowledges that SEH shall not be liable for any damages which arise out of the user's access or use of data provided.

Path: X:\AE\D\DAKOT\115528\05-final-dsgn\51-drawings\90-GIS\EAWFig02_Topo.mxd

SEH
3535 VADNAIS CENTER DR.
ST. PAUL, MN 55110
PHONE: (651) 490-2000
FAX: (651) 490-2150
WATTS: 800-325-2055
www.sehinc.com

Project: DAKOT 155280
Print Date: 5/24/2021

User Name: msteuernagel
Projection: NAD 83 UTM Z 15N
Source: SEHinc, Dakota Co., MNDNR
Background: USGS 24k Topo

Minnesota River Greenway – Fort Snelling State Park Segment Trail

USGS 24k Topographic Map

Dakota County Minnesota

Figure 3

Map Unit	Map Unit Name
7C	Hubbard loamy sand, 6-12% slopes
7D	Hubbard loamy sand, 12-18% slopes
8B	Sparta loamy fine sand, 1-6% slopes
27B	Dickinson sandy loam, 2-6% slopes
94C	Terril loam, 4-12% slopes
317	Oshawa silty clay loam
454E	Mahtomedi loamy sand, 15-25% slopes
463	Minneiska loam, occasionally flooded
522	Boots muck
539	Klossner muck, 0-1% slopes
540	Seelyeville muck
545	Rondeau muck
611F	Hawick loamy sand, 25-50% slopes
860C	Urban land-Lester complex, 3-15% slopes
861C	Urban land-Kingsley complex, 3-15% slopes
1027	Udorthents, wet
1029	Pits, gravel
1055	Aquolls and Histosols, ponded
1825C	Seelyeville muck, sloping

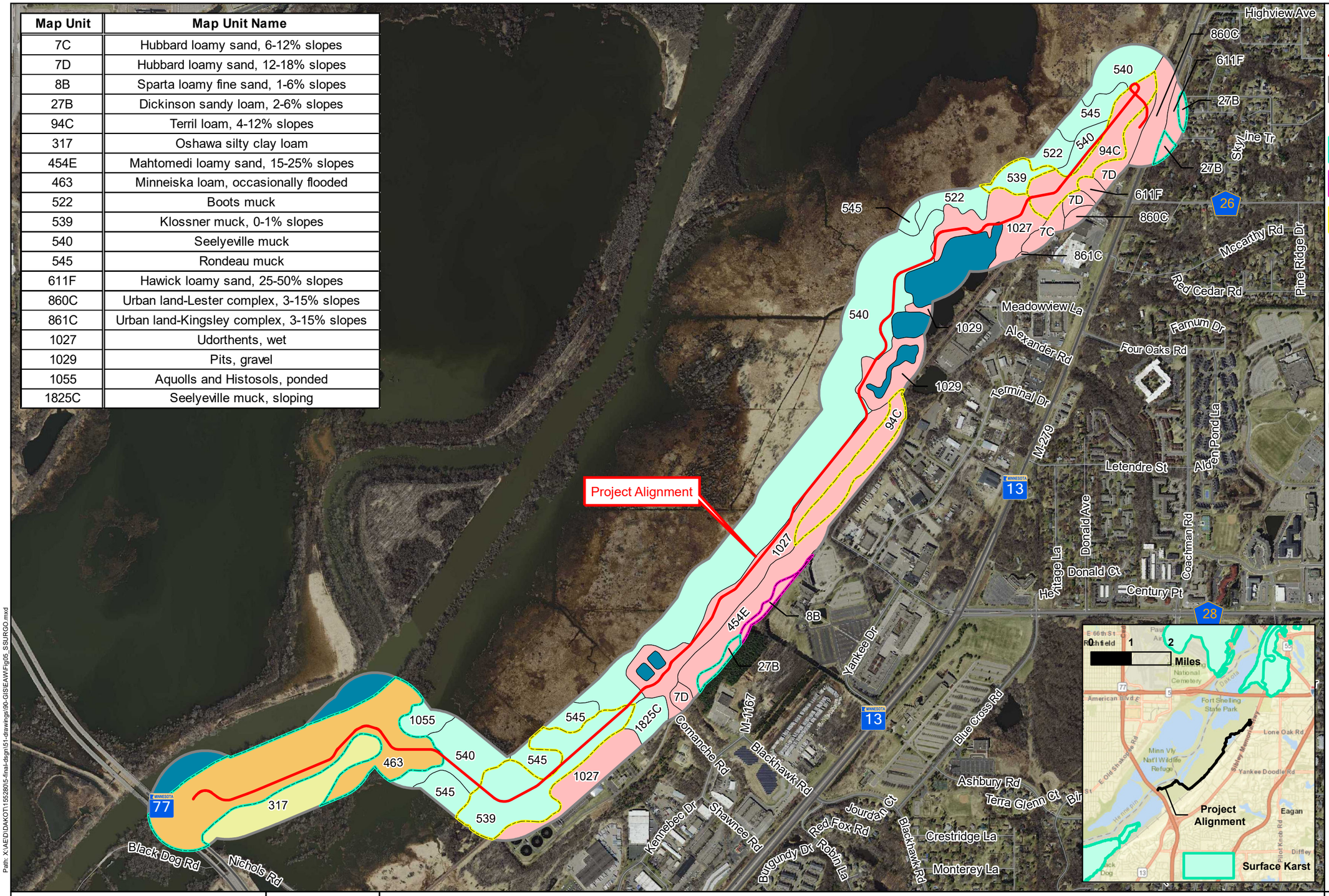

Legend

- Project Alignment
- 500-foot Buffer

Prime Farmland Soil Status

- All areas are prime farmland
- Farmland of local importance
- Farmland of statewide importance

Hydric Soil Rating

- All Hydric
- Predominately Hydric
- Predominately Non-hydric
- Not Hydric
- Water

N W E S

0 500 1,000 2,000 Feet

This map is neither a legally recorded map nor a survey map and is not intended to be used as one. This map is a compilation of records, information, and data gathered from various sources listed on this map and is to be used for reference purposes only. SEH does not warrant that the Geographic Information System (GIS) Data used to prepare this map are error free, and SEH does not represent that the GIS Data can be used for navigational, tracking, or any other purpose requiring exacting measurement of distance or direction or precision in the depiction of geographic features. The user of this map acknowledges that SEH shall not be liable for any damages which arise out of the user's access or use of data provided.

Path: X:\AE\D\DAKOT\155280\5-final-dsgn\51-drawings\90-GIS\EAWIFig05_SSURGO.mxd

SEH
3535 VADNAIS CENTER DR.
ST. PAUL, MN 55110
PHONE: (651) 490-2000
FAX: (651) 490-2150
WATTS: 800-325-2055
www.sehinc.com

Project: DAKOT 155280
Print Date: 5/24/2021

User Name: msteuernagel
Projection: NAD 83 UTM Z 15N
Source: SEHinc, Dakota Co., MNDNR
Background: 2020 MNDNR

Minnesota River Greenway – Fort Snelling State Park Segment Trail

SSURGO Soil Survey & Geologic Features Map

Dakota County Minnesota

Figure 4



Legend

- Wetland Impacts
- Wetland Boundary
- Grading Limits
- Bridge or Boardwalk

**These structures may have temporary wetland impacts during construction, but have no permanent wetland impacts. Components of these structures are typically not considered permanent impacts. No mitigation for these components is required.*

N
W E
S

0 100 200 400 Feet

This map is neither a legally recorded map nor a survey map and is not intended to be used as one. This map is a compilation of records, information, and data gathered from various sources listed on this map and is to be used for reference purposes only. SEH does not warrant that the Geographic Information System (GIS) Data used to prepare this map are error free, and SEH does not represent that the GIS Data can be used for navigational, tracking, or any other purpose requiring exacting measurement of distance or direction or precision in the depiction of geographic features. The user of this map acknowledges that SEH shall not be liable for any damages which arise out of the user's access or use of data provided.

SEH
3535 VADNAIS CENTER DR.
ST. PAUL, MN 55110
PHONE: (651) 490-2000
FAX: (651) 490-2150
WATTS: 800-325-2055
www.sehinc.com

Project: DAKOT 155280
Print Date: 5/24/2021

User Name: msteuernagel
Projection: NAD 83 UTM Z 15N
Source: SEHinc, Dakota Co., MNDNR
Background: 2020 MNDNR

Minnesota River Greenway – Fort Snelling State Park Segment Trail

Proposed Wetland Impacts

Dakota County Minnesota

Figure 5A

Path: X:\AE\D\DAKOT\155280\5-final-dsgn\51-drawings\90-GIS\EAWFig08_WetlandImpact_rb.mxd



Legend

- Wetland Impacts
- Wetland Boundary
- Grading Limits
- Bridge or Boardwalk

**These structures may have temporary wetland impacts during construction, but have no permanent wetland impacts. Components of these structures are typically not considered permanent impacts. No mitigation for these components is required.*

N
W E
S

0 100 200 400 Feet

This map is neither a legally recorded map nor a survey map and is not intended to be used as one. This map is a compilation of records, information, and data gathered from various sources listed on this map and is to be used for reference purposes only. SEH does not warrant that the Geographic Information System (GIS) Data used to prepare this map are error free, and SEH does not represent that the GIS Data can be used for navigational, tracking, or any other purpose requiring exacting measurement of distance or direction or precision in the depiction of geographic features. The user of this map acknowledges that SEH shall not be liable for any damages which arise out of the user's access or use of data provided.

Path: X:\AE\D\DAKOT\155280\5-final-dsgn\51-drawings\90-GIS\EAWFig08_WetlandImpact_rb.mxd

SEH
3535 VADNAIS CENTER DR.
ST. PAUL, MN 55110
PHONE: (651) 490-2000
FAX: (651) 490-2150
WATTS: 800-325-2055
www.sehinc.com

Project: DAKOT 155280
Print Date: 5/24/2021

User Name: msteuernagel
Projection: NAD 83 UTM Z 15N
Source: SEHinc, Dakota Co., MNDNR
Background: 2020 MNDNR

Minnesota River Greenway – Fort Snelling State Park Segment Trail

Proposed Wetland Impacts

Dakota County Minnesota

Figure 5B



Legend

- Wetland Impacts
- Wetland Boundary
- Grading Limits
- Bridge or Boardwalk

**These structures may have temporary wetland impacts during construction, but have no permanent wetland impacts. Components of these structures are typically not considered permanent impacts. No mitigation for these components is required.*

N
W E
S

0 100 200 400
Feet

This map is neither a legally recorded map nor a survey map and is not intended to be used as one. This map is a compilation of records, information, and data gathered from various sources listed on this map and is to be used for reference purposes only. SEH does not warrant that the Geographic Information System (GIS) Data used to prepare this map are error free, and SEH does not represent that the GIS Data can be used for navigational, tracking, or any other purpose requiring exacting measurement of distance or direction or precision in the depiction of geographic features. The user of this map acknowledges that SEH shall not be liable for any damages which arise out of the user's access or use of data provided.

Path: X:\AE\D\DAKOT\155280\5-final-dsgn\51-drawings\90-GIS\EAWFig08_WetlandImpact_rb.mxd

SEH
3535 VADNAIS CENTER DR.
ST. PAUL, MN 55110
PHONE: (651) 490-2000
FAX: (651) 490-2150
WATTS: 800-325-2055
www.sehinc.com

Project: DAKOT 155280
Print Date: 5/24/2021

User Name: msteuernagel
Projection: NAD 83 UTM Z 15N
Source: SEHinc, Dakota Co., MNDNR
Background: 2020 MNDNR

Minnesota River Greenway – Fort Snelling State Park Segment Trail

Proposed Wetland Impacts

Dakota County Minnesota

Figure 5C



Legend

- Wetland Impacts
- Wetland Boundary
- Grading Limits
- Bridge or Boardwalk

**These structures may have temporary wetland impacts during construction, but have no permanent wetland impacts. Components of these structures are typically not considered permanent impacts. No mitigation for these components is required.*

N
W E
S

0 100 200 400
Feet

This map is neither a legally recorded map nor a survey map and is not intended to be used as one. This map is a compilation of records, information, and data gathered from various sources listed on this map and is to be used for reference purposes only. SEH does not warrant that the Geographic Information System (GIS) Data used to prepare this map are error free, and SEH does not represent that the GIS Data can be used for navigational, tracking, or any other purpose requiring exacting measurement of distance or direction or precision in the depiction of geographic features. The user of this map acknowledges that SEH shall not be liable for any damages which arise out of the user's access or use of data provided.

Path: X:\AE\D\DAKOT\155280\5-final-dsgn\51-drawings\90-GIS\EAWFig08_WetlandImpact_rb.mxd

SEH
3535 VADNAIS CENTER DR.
ST. PAUL, MN 55110
PHONE: (651) 490-2000
FAX: (651) 490-2150
WATTS: 800-325-2055
www.sehinc.com

Project: DAKOT 155280
Print Date: 5/24/2021

User Name: msteuernagel
Projection: NAD 83 UTM Z 15N
Source: SEHinc, Dakota Co., MNDNR
Background: 2020 MNDNR

Minnesota River Greenway – Fort Snelling State Park Segment Trail

Proposed Wetland Impacts

Dakota County Minnesota

Figure 5D

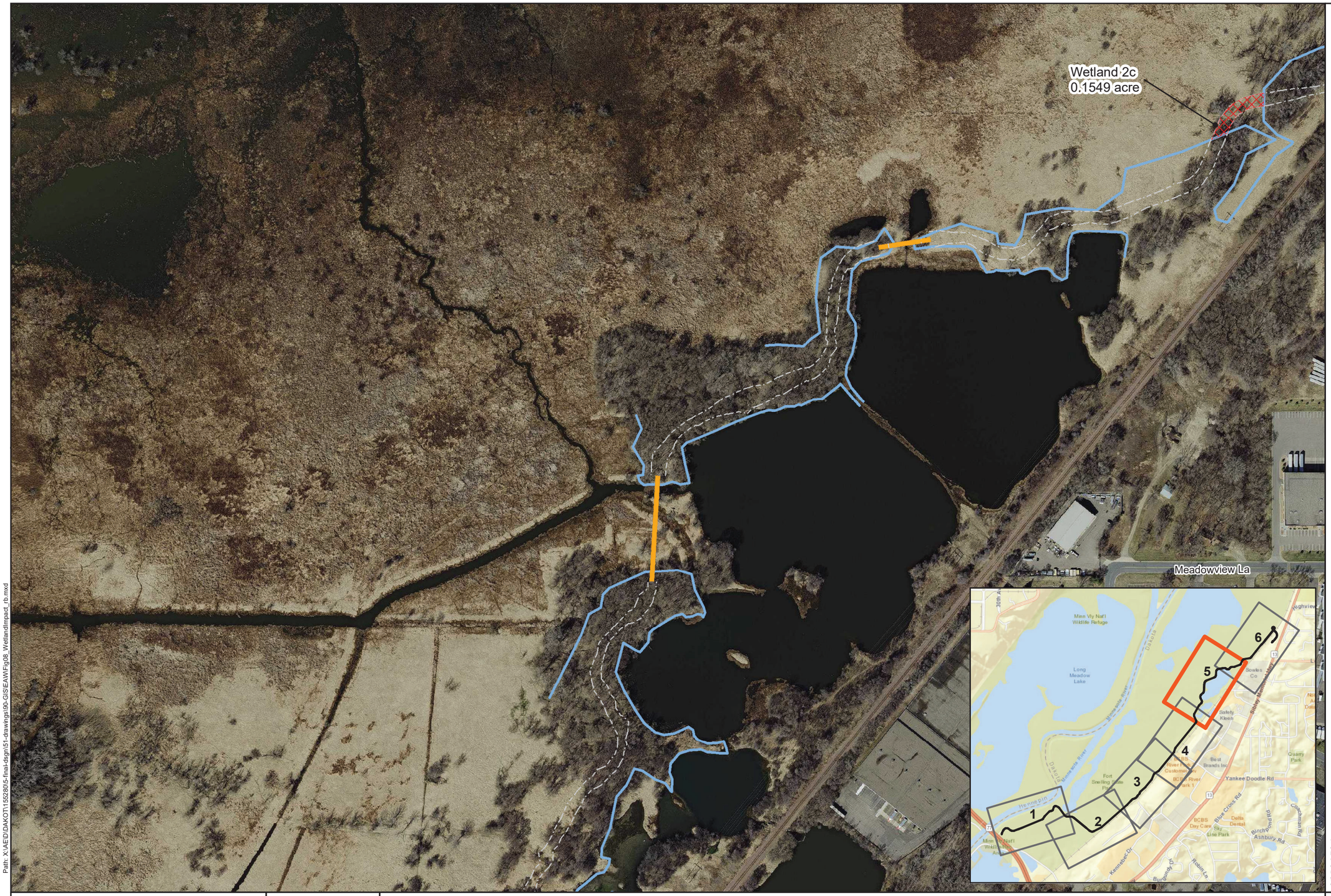

Legend

- Wetland Impacts
- Wetland Boundary
- Grading Limits
- Bridge or Boardwalk

**These structures may have temporary wetland impacts during construction, but have no permanent wetland impacts. Components of these structures are typically not considered permanent impacts. No mitigation for these components is required.*

N
W E
S

0 100 200 400
Feet

This map is neither a legally recorded map nor a survey map and is not intended to be used as one. This map is a compilation of records, information, and data gathered from various sources listed on this map and is to be used for reference purposes only. SEH does not warrant that the Geographic Information System (GIS) Data used to prepare this map are error free, and SEH does not represent that the GIS Data can be used for navigational, tracking, or any other purpose requiring exacting measurement of distance or direction or precision in the depiction of geographic features. The user of this map acknowledges that SEH shall not be liable for any damages which arise out of the user's access or use of data provided.

Path: X:\AE\D\DAKOT\155280\5-final-dsgn\51-drawings\90-GIS\EAW\Fig08_WetlandImpact_rb.mxd

SEH
3535 VADNAIS CENTER DR.
ST. PAUL, MN 55110
PHONE: (651) 490-2000
FAX: (651) 490-2150
WATTS: 800-325-2055
www.sehinc.com

Project: DAKOT 155280
Print Date: 5/24/2021

User Name: msteuernagel
Projection: NAD 83 UTM Z 15N
Source: SEHinc, Dakota Co., MNDNR
Background: 2020 MNDNR

Minnesota River Greenway – Fort Snelling State Park Segment Trail

Proposed Wetland Impacts

Dakota County Minnesota

Figure 5E



Legend

- Wetland Impacts
- Wetland Boundary
- Grading Limits
- Bridge or Boardwalk

**These structures may have temporary wetland impacts during construction, but have no permanent wetland impacts. Components of these structures are typically not considered permanent impacts. No mitigation for these components is required.*

N
W E
S

0 100 200 400
Feet

This map is neither a legally recorded map nor a survey map and is not intended to be used as one. This map is a compilation of records, information, and data gathered from various sources listed on this map and is to be used for reference purposes only. SEH does not warrant that the Geographic Information System (GIS) Data used to prepare this map are error free, and SEH does not represent that the GIS Data can be used for navigational, tracking, or any other purpose requiring exacting measurement of distance or direction or precision in the depiction of geographic features. The user of this map acknowledges that SEH shall not be liable for any damages which arise out of the user's access or use of data provided.

Path: X:\AE\D\DAKOT\155280\5-final-dsgn\51-drawings\90-GIS\EAW\Fig08_WetlandImpact_rb.mxd

SEH
3535 VADNAIS CENTER DR.
ST. PAUL, MN 55110
PHONE: (651) 490-2000
FAX: (651) 490-2150
WATTS: 800-325-2055
www.sehinc.com

Project: DAKOT 155280
Print Date: 5/24/2021

User Name: msteuernagel
Projection: NAD 83 UTM Z 15N
Source: SEHinc, Dakota Co., MNDNR
Background: 2020 MNDNR

Minnesota River Greenway – Fort Snelling State Park Segment Trail

Proposed Wetland Impacts

Dakota County Minnesota

Figure 5F

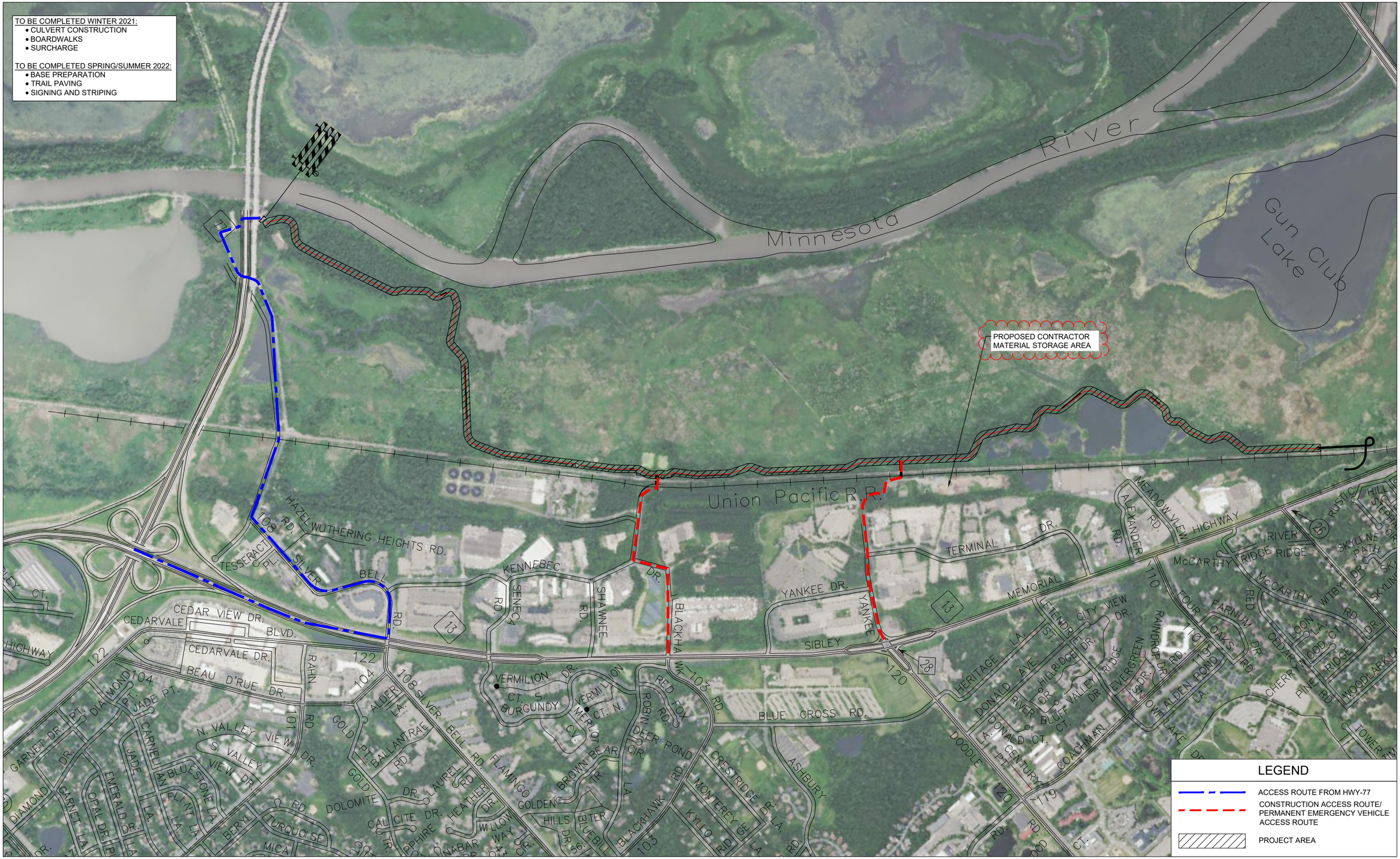

DRAWN BY: KM					
DESIGNER: KM					
CHECKED BY: WB					
DESIGN TEAM	NO.	BY	DATE	REVISIONS	

Dakota COUNTY

SEH
PHONE: 952.912.2600
10901 RED CIRCLE DRIVE, SUITE 300
MINNETONKA, MN 55343
www.sehinc.com

I HEREBY CERTIFY THAT THIS PLAN WAS PREPARED BY ME OR UNDER MY DIRECT SUPERVISION AND THAT I AM A DULY LICENSED PROFESSIONAL ENGINEER UNDER THE LAWS OF THE STATE OF MINNESOTA.

PRELIMINARY

XXXXXXXXXXXX, PE

Date: XX/XX/2020 Lic. No. XXXXX

MINNESOTA RIVER GREENWAY - FORT SNELLING SEGMENT

TRAFFIC CONTROL PLAN

SP 019-090-024

FILE NO. 155280

6

x:\ae\d\dakot\155280\5-final-dsgn\51-drawings\10-civil\cad\dwg\sheet\dc155280tc.dwg 12/15/2020 12:46 PM kmontebello

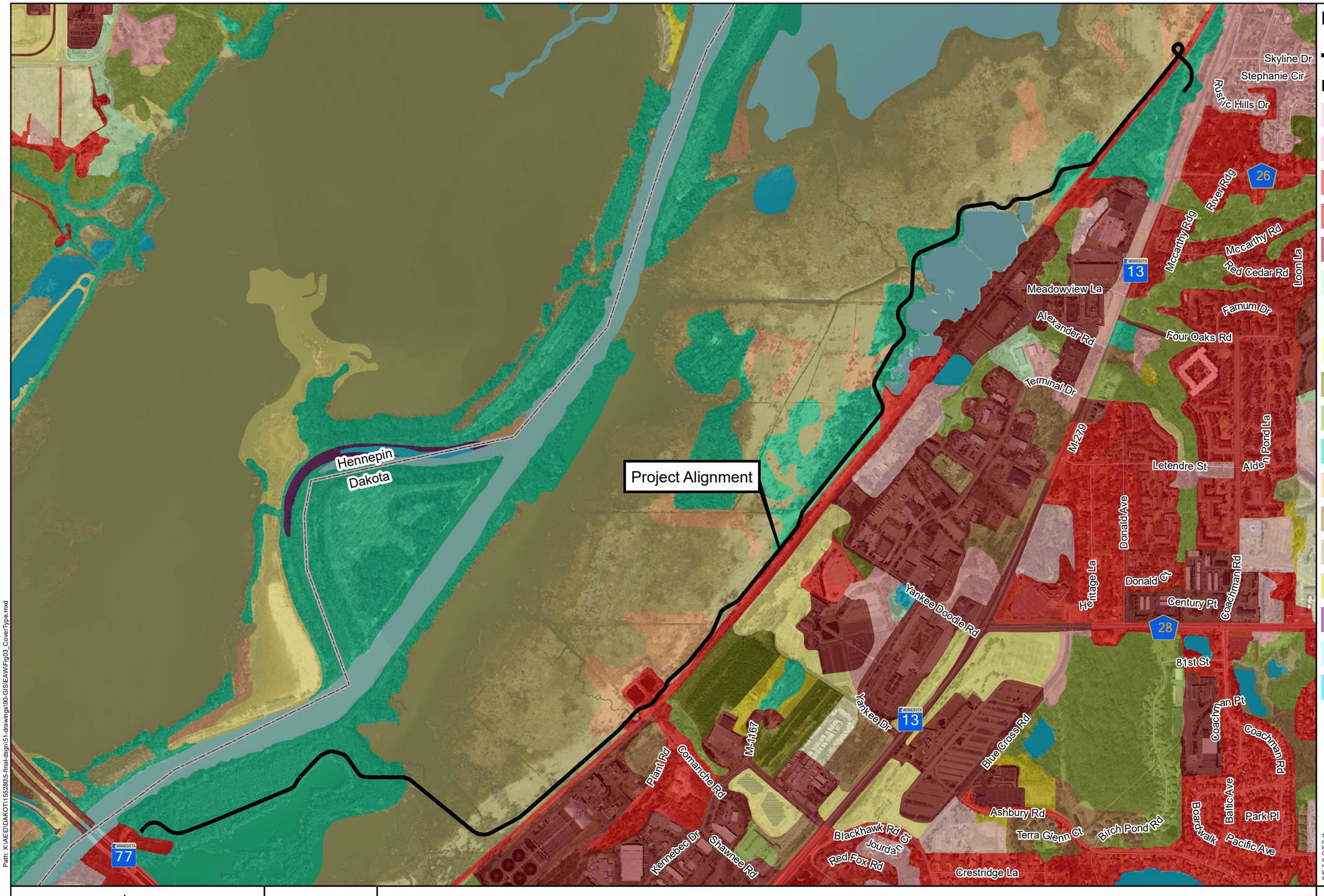

Legend

Project Alignment

Land Cover

- 5-10% Impervious
- 11-25% Impervious
- 26-50% Impervious
- 51-75% Impervious
- 76-100% Impervious
- Short Grasses
- Agricultural Land
- Maintained Tall Grass
- Tree Plantation
- Forest
- Wetland Forest
- Wetland Shrubs
- Tall Grasses
- Wetland Emergent Veg.
- Dry Tall Grasses
- Mud Flat
- Open Water
- Wetland Open Water

N W E S

0 500 1,000 2,000 Feet

This map is neither a legally recorded map nor a survey map and is not intended to be used as one. This map is a compilation of records, information, and data gathered from various sources listed on this map and is to be used for reference purposes only. SEH does not warrant that the Geographic Information System (GIS) Data used to prepare this map are error free, and SEH does not represent that the GIS Data can be used for navigational, tracking, or any other purpose requiring exacting measurement of distance or direction or precision in the depiction of geographic features. The user of this map acknowledges that SEH shall not be liable for any damages which arise out of the user's access or use of data provided.

Path: X:\AE\D\DAKOT\155280\5-final-dsgn\51-drawings\90-GIS\EAW\Fig03_CoverType.mxd

SEH
3535 VADNAIS CENTER DR.
ST. PAUL, MN 55110
PHONE: (651) 490-2000
FAX: (651) 490-2150
WATTS: 800-325-2055
www.sehinc.com

Project: DAKOT 155280
Print Date: 5/24/2021

User Name: msteuernagel
Projection: NAD 83 UTM Z 15N
Source: SEHinc, Dakota Co., MNDNR
Background: 2020 MNDNR

Minnesota River Greenway – Fort Snelling State Park Segment Trail

Minnesota Land Cover Classification System Map

Dakota County Minnesota

Figure 7

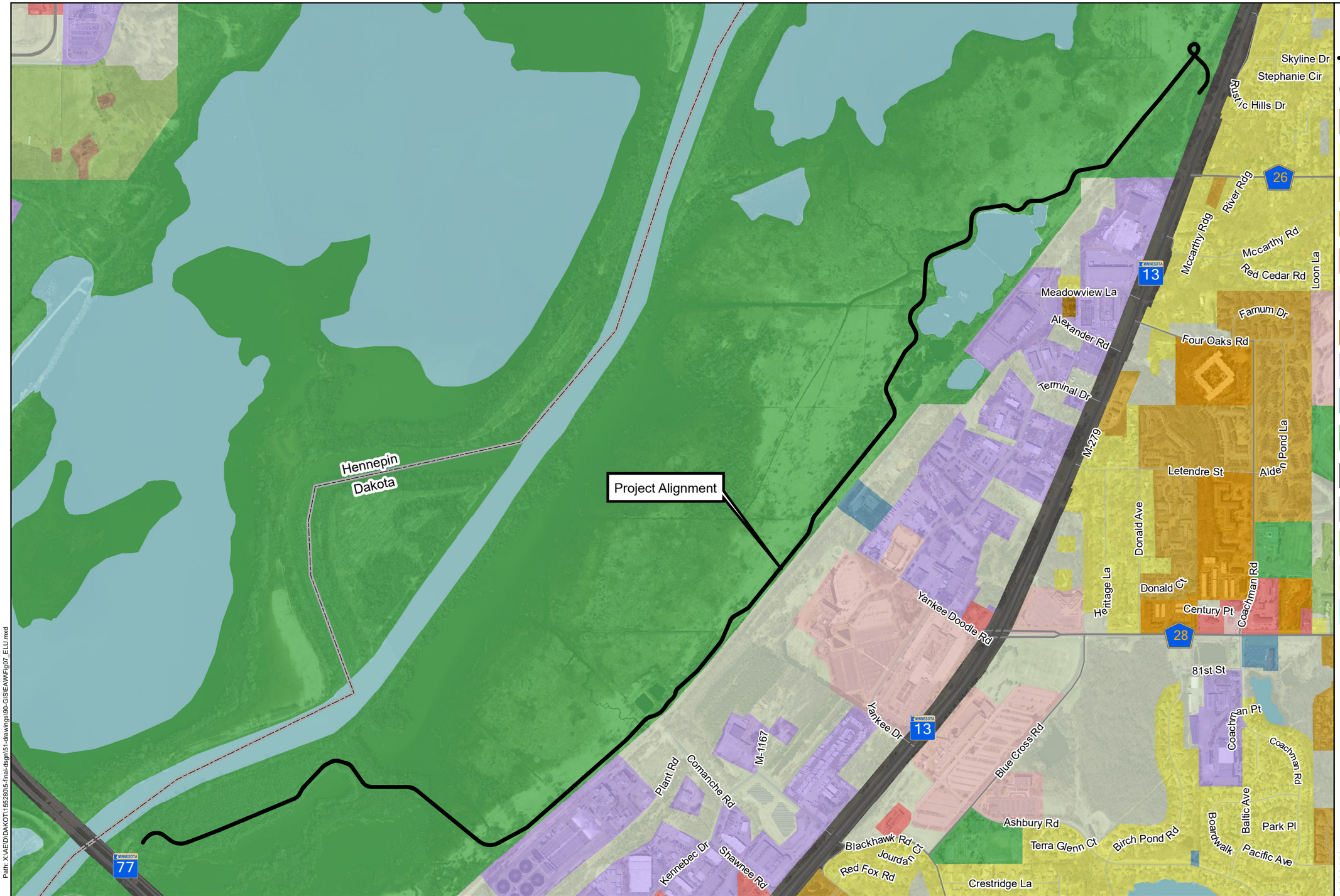

Legend

- Project Alignment

Generalized Land Use 2016

- Farmstead
- Single Family Detached
- Single Family Attached
- Multifamily
- Retail and Other Commercial
- Office
- Mixed Use Residential
- Industrial and Utility
- Institutional
- Park, Recreational or Preserve
- Major Highway
- Railway
- Agricultural
- Undeveloped
- Water

N
W E
S

0 500 1,000 2,000 Feet

This map is neither a legally recorded map nor a survey map and is not intended to be used as one. This map is a compilation of records, information, and data gathered from various sources listed on this map and is to be used for reference purposes only. SEH does not warrant that the Geographic Information System (GIS) Data used to prepare this map are error free, and SEH does not represent that the GIS Data can be used for navigational, tracking, or any other purpose requiring exacting measurement of distance or direction or precision in the depiction of geographic features. The user of this map acknowledges that SEH shall not be liable for any damages which arise out of the user's access or use of data provided.

Path: X:\AE\D\DAKOT\155280\5-final-dsgn\51-drawings\90-GIS\EAWFig07_ELU.mxd

SEH
3535 VADNAIS CENTER DR.
ST. PAUL, MN 55110
PHONE: (651) 490-2000
FAX: (651) 490-2150
WATTS: 800-325-2055
www.sehinc.com

Project: DAKOT 155280
Print Date: 5/24/2021

User Name: msteuernagel
Projection: NAD 83 UTM Z 15N
Source: SEHinc, Dakota Co., MNDNR MnGeo
Background: 2020 MN. DNR

Minnesota River Greenway – Fort Snelling State Park Segment Trail

Existing Land Use Map

Dakota County Minnesota

Figure 8

Gun Club
P-19007800

Unnamed
W-19012900

Unnamed
W-19013000

Unnamed
W-19012800

Hohag Pond
P-27108400

Long Meadow
P-27000200

Unnamed
P-27108500

Unnamed
P-27108500

Unnamed Stream

Minnesota River

Unnamed Stream

Project Alignment

Black Dog Creek

Kennaley's Creek

Nicols
W-19014200

Black Dog
P-19008300

Unnamed
W-19013800

Skyline Dr
Stephanie Cir
Rustic Hills Dr
River Rdg
Mccarthy Rdg
Mccarthy Rd
Red Cedar Rd
Loon La
Meadowview La
Alexander Rd
Farnum Dr
Four Oaks Rd
Terminal Dr
M-279
Letendre St
Alden Pond La
Donald Ave
Heritage La
Donald Ct
Century Pt
Coachman Rd
Yankee Doodle Rd
81st St
Coachman Pt
Coachman Rd
Yankee Dr
M-1167
Plant Rd
Comanche Rd
Blue Cross Rd
Ashury Rd
Terra Glenn Ct
Birch Pond Rd
Boardwalk
Baltic Ave
Park Pl
Pacific Ave
Kenebec Dr
Shawnee Rd
Blackhawk Rd
Jourdan
Red Fox Rd
Crestridge La

MINNESOTA 13
MINNESOTA 26
MINNESOTA 28
MINNESOTA 77

Legend

- Non-PWI Stream
- Spring
- Spring - Not Field Verified

Public Waters Inventory

- Public Watercourse (Trout Stream)
- Public Watercourse (Non-Trout Stream)
- Public Water Basin

NWI Wetland Type

- Type 1 - Seasonally Flooded
- Type 3 - Shallow Marsh
- Type 4 - Deep Marsh
- Type 5 - Shallow Open Water
- Type 6 - Shrub Swamp
- Riverine System

N
W E
S

0 500 1,000 2,000 Feet

This map is neither a legally recorded map nor a survey map and is not intended to be used as one. This map is a compilation of records, information, and data gathered from various sources listed on this map and is to be used for reference purposes only. SEH does not warrant that the Geographic Information System (GIS) Data used to prepare this map are error free, and SEH does not represent that the GIS Data can be used for navigational, tracking, or any other purpose requiring exacting measurement of distance or direction or precision in the depiction of geographic features. The user of this map acknowledges that SEH shall not be liable for any damages which arise out of the user's access or use of data provided.

Path: X:\AE\D\DAKOT\155280\5-final-dsgn\51-drawings\90-GIS\EAW\Fig04_Hydro.mxd

SEH
3535 VADNAIS CENTER DR.
ST. PAUL, MN 55110
PHONE: (651) 490-2000
FAX: (651) 490-2150
WATTS: 800-325-2055
www.sehinc.com

Project: DAKOT 155280
Print Date: 5/24/2021

User Name: msteuernagel
Projection: NAD 83 UTM Z 15N
Source: SEHinc, Dakota Co., MNDNR
Background: 2020 MNDNR

Minnesota River Greenway – Fort Snelling State Park Segment Trail

Hydrology Features Map

Dakota County Minnesota

Figure 9

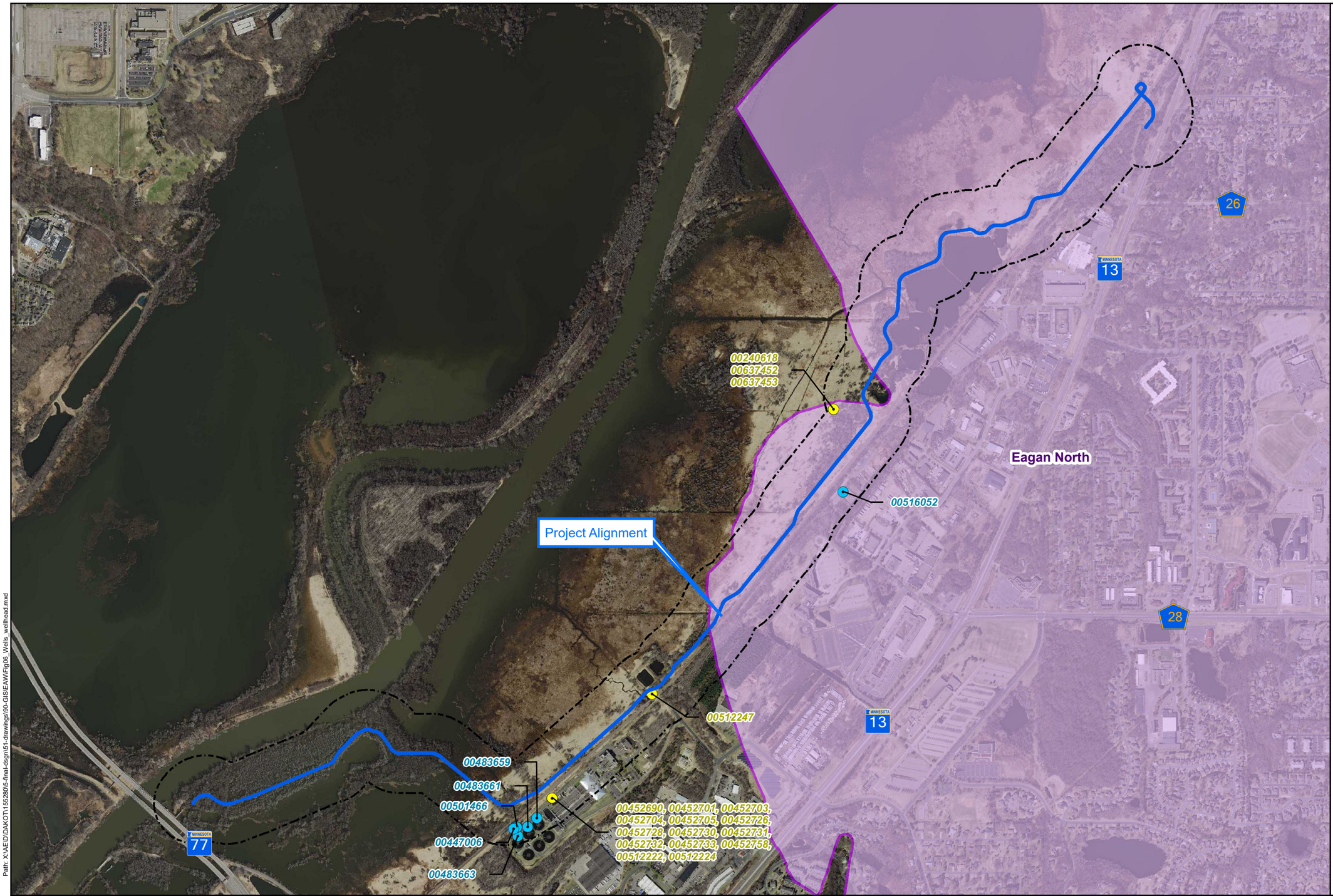

Legend

- Project Alignment
- 500-foot Buffer
- Wellhead Protection Area

County Well Index

- Field Verified Well
- Unlocated Well

N
W E
S

0 500 1,000 2,000 Feet

This map is neither a legally recorded map nor a survey map and is not intended to be used as one. This map is a compilation of records, information, and data gathered from various sources listed on this map and is to be used for reference purposes only. SEH does not warrant that the Geographic Information System (GIS) Data used to prepare this map are error free, and SEH does not represent that the GIS Data can be used for navigational, tracking, or any other purpose requiring exacting measurement of distance or direction or precision in the depiction of geographic features. The user of this map acknowledges that SEH shall not be liable for any damages which arise out of the user's access or use of data provided.

Path: X:\AE\D\DAKOT\155280\5-final-dsgn\51-drawings\90-GIS\EAWFig06_Wells_wellhead.mxd

SEH
3535 VADNAIS CENTER DR.
ST. PAUL, MN 55110
PHONE: (651) 490-2000
FAX: (651) 490-2150
WATTS: 800-325-2055
www.sehinc.com

Project: DAKOT 155280
Print Date: 5/24/2021

User Name: msteuernagel
Projection: NAD 83 UTM Z 15N
Source: SEHinc, Dakota Co., MNDNR
Background: 2020 MNDNR

Minnesota River Greenway – Fort Snelling State Park Segment Trail

County Well Index & Wellhead Protection Area Map

Dakota County Minnesota

Figure 10

Appendix B

River Bottom Trail Project General Layout and Typical Sections

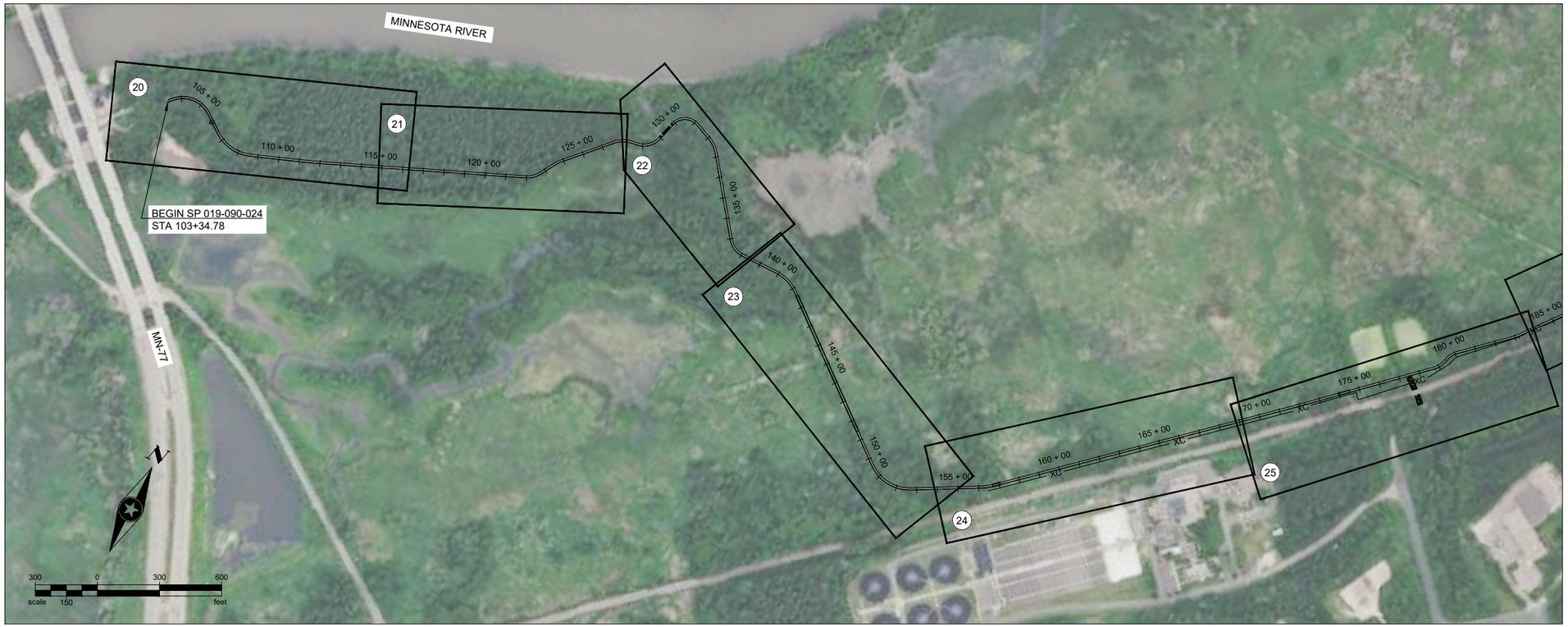

LEGEND	
(XX)	CONSTRUCTION PLAN AND PROFILE

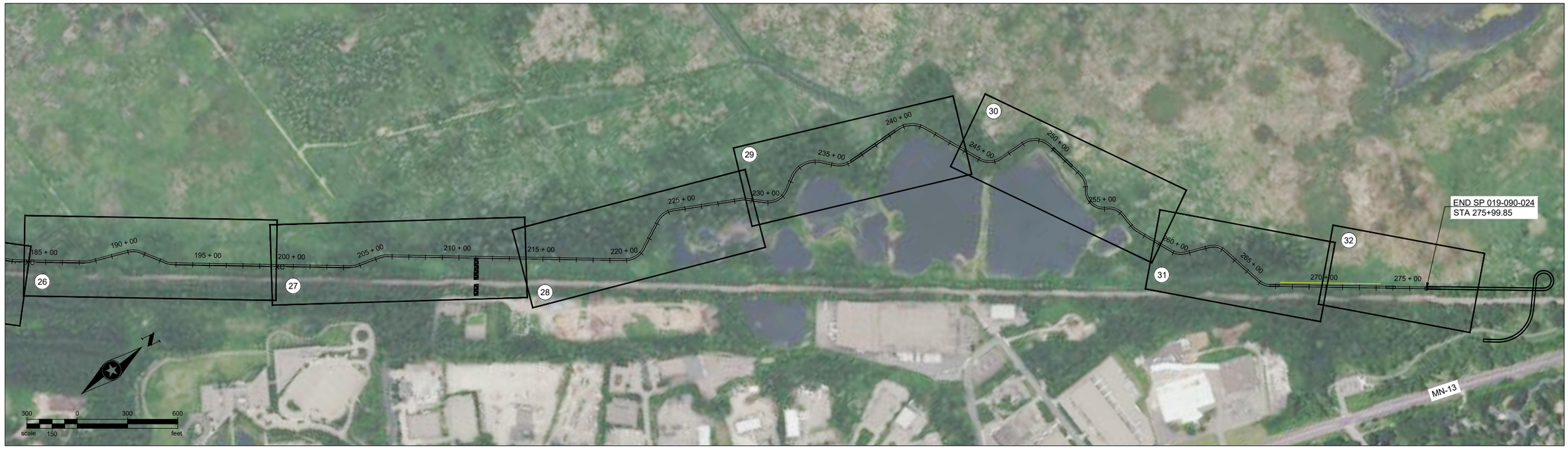

x:\aet\d\dakot\155280\5-final-dsgn\51-drawings\10-civil\cad\dwg\sheet\dc155280gl_2.dwg 5/20/2021 10:13 AM kmontebello

DRAWN BY:	KM
DESIGNER:	KM
CHECKED BY:	WB
DESIGN TEAM	

NO.	BY	DATE	REVISIONS

Dakota County

SEH
PHONE: 952.912.2600
10901 RED CIRCLE DRIVE,
SUITE 300
MINNETONKA, MN 55343
www.sehinc.com

I HEREBY CERTIFY THAT THIS PLAN WAS PREPARED BY ME OR UNDER MY DIRECT SUPERVISION AND THAT I AM A DULY LICENSED PROFESSIONAL ENGINEER UNDER THE LAWS OF THE STATE OF MINNESOTA.

PRELIMINARY

XXXXXXXXXX, PE

Date: XX/X/2020 Lic. No. XXXXX

MINNESOTA RIVER GREENWAY - FORT SNELLING SEGMENT

GENERAL LAYOUT

SP 019-090-024

FILE NO. 155280

TYPICAL SECTION - A

MINNESOTA RIVER GREENWAY -
FORT SNELLING SEGMENT

- STA 103+34.78 TO STA 126+58.00

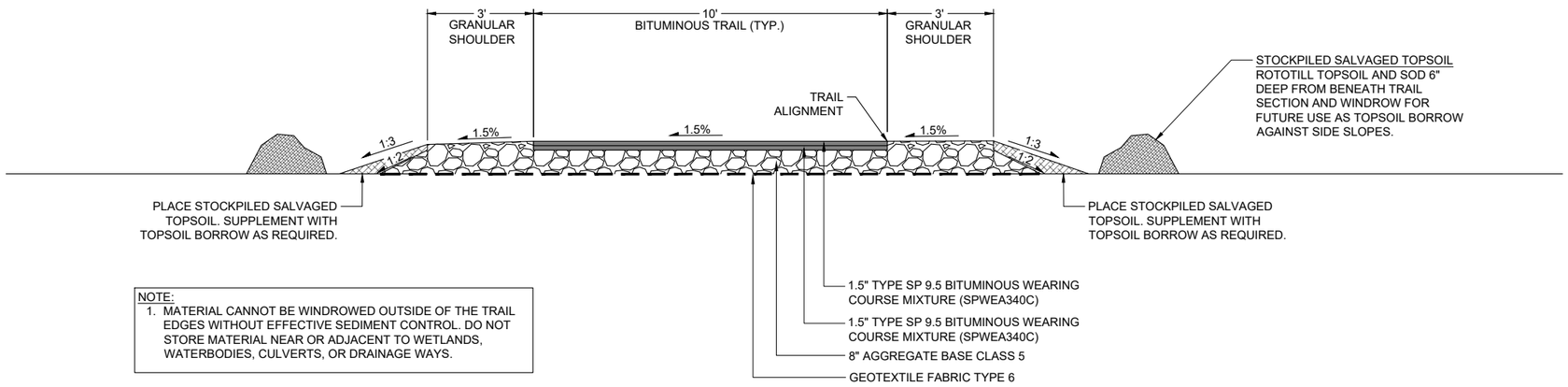

NOTE:
1. MATERIAL CANNOT BE WINDROWED OUTSIDE OF THE TRAIL EDGES WITHOUT EFFECTIVE SEDIMENT CONTROL. DO NOT STORE MATERIAL NEAR OR ADJACENT TO WETLANDS, WATERBODIES, CULVERTS, OR DRAINAGE WAYS.

TYPICAL SECTION - B

TURN AROUND

- STA 125+00 TO STA 125+35

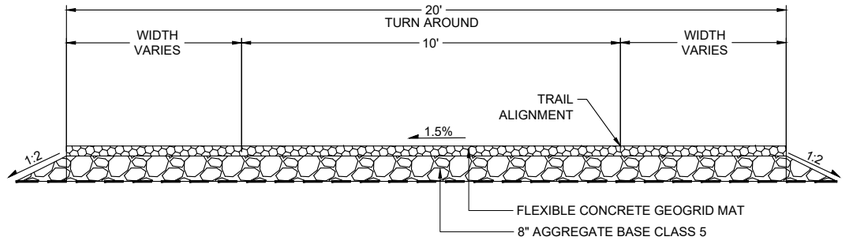

x:\ae\d\dakot\155280\5-final-dsgn\51-drawings\10-civil\cad\dwg\sheet\dc155280ty.dwg 5/20/2021 10:13 AM kmontebello

DRAWN BY: KM DESIGNER: KM CHECKED BY: WB DESIGN TEAM	NO.	BY	DATE	REVISIONS	Dakota COUNTY	SEH PHONE: 952.912.2600 10901 RED CIRCLE DRIVE, SUITE 300 MINNETONKA, MN 55343 www.sehinc.com	I HEREBY CERTIFY THAT THIS PLAN WAS PREPARED BY ME OR UNDER MY DIRECT SUPERVISION AND THAT I AM A DULY LICENSED PROFESSIONAL ENGINEER UNDER THE LAWS OF THE STATE OF MINNESOTA PRELIMINARY XXXXXXXXXXXX, PE Date: XX/XX/2020 Lic. No. XXXXX	MINNESOTA RIVER GREENWAY - FORT SNELLING SEGMENT	TYPICAL SECTIONS	SP 019-090-024 FILE NO. 155280	4 119

TYPICAL SECTION - C

MINNESOTA RIVER GREENWAY -
FORT SNELLING SEGMENT

- STA 126+58.00 TO STA 129+02.48
- STA 129+87.66 TO STA 141+39.67
- STA 148+56.33 TO STA 156+70.67
- STA 157+11.33 TO STA 173+95.67
- STA 174+54.33 TO STA 236+24.67
- STA 239+41.33 TO STA 249+93.67
- STA 251+50.33 TO STA 266+65.67
- STA 267+22.33 TO STA 273+57.67
- STA 274+14.32 TO STA 275+99.85

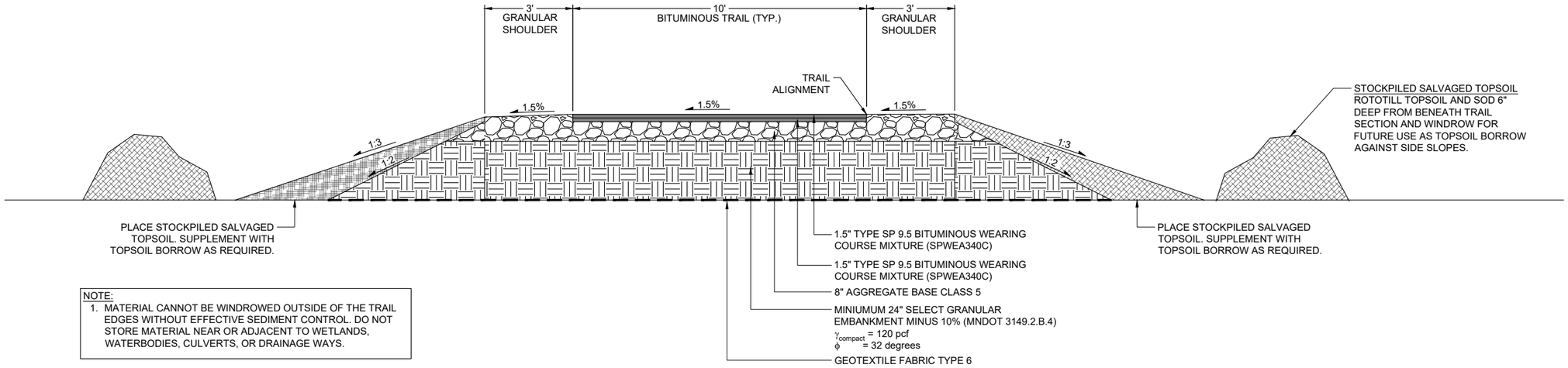

NOTE:
1. MATERIAL CANNOT BE WINDROWED OUTSIDE OF THE TRAIL EDGES WITHOUT EFFECTIVE SEDIMENT CONTROL. DO NOT STORE MATERIAL NEAR OR ADJACENT TO WETLANDS, WATERBODIES, CULVERTS, OR DRAINAGE WAYS.

TYPICAL SECTION - D

TURN AROUND

- STA 150+50 TO STA 150+85
- STA 188+50 TO STA 188+85
- STA 222+50 TO STA 222+85
- STA 247+00 TO STA 247+35
- STA 263+50 TO STA 263+85

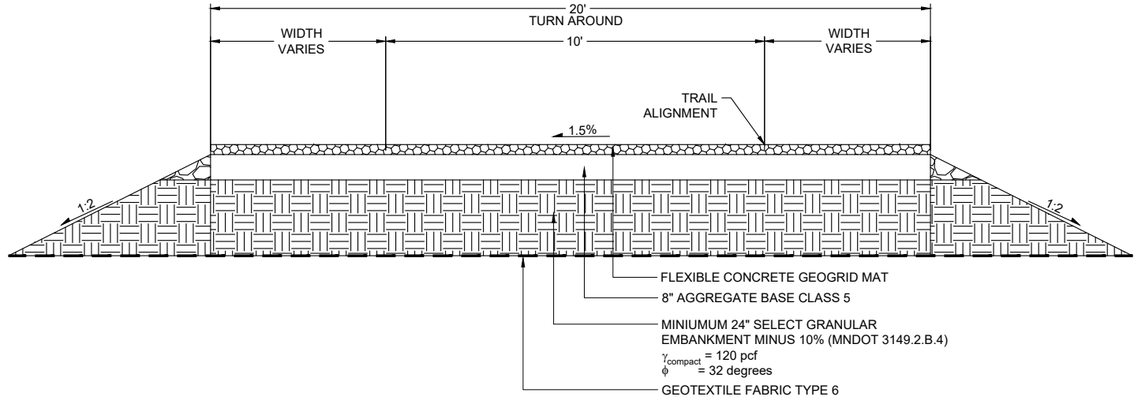

DRAWN BY: KM							
DESIGNER: KM							
CHECKED BY: WB							
DESIGN TEAM	NO.	BY	DATE	REVISIONS			

Dakota County

SEH
PHONE: 952.912.2600
10901 RED CIRCLE DRIVE, SUITE 300
MINNETONKA, MN 55343
www.sehinc.com

I HEREBY CERTIFY THAT THIS PLAN WAS PREPARED BY ME OR UNDER MY DIRECT SUPERVISION AND THAT I AM A DULY LICENSED PROFESSIONAL ENGINEER UNDER THE LAWS OF THE STATE OF MINNESOTA.

PRELIMINARY

XXXXXXXXXX, PE

Date: XX/X/2020 Lic. No. XXXXX

MINNESOTA RIVER GREENWAY - FORT SNELLING SEGMENT

TYPICAL SECTIONS

SP 019-090-024

FILE NO. 155280

5 / 119

x:\arl\dfs\dako\t155280\05-final-dsgn\51-drawings\10-civil\cad\dwg\sheet\dc155280ty.dwg 5/20/2021 10:13 AM kmontebello

LEGEND

- 101+00 — TRAIL ALIGNMENT
- PROPERTY LINE
- PERMANENT EASEMENT
- TEMPORARY EASEMENT
- CONSTRUCTION LIMITS
- CULVERT AND APRON
- XC — CHAIN LINK FENCE
- BOARDWALK
- BITUMINOUS TRAIL
- W — EXISTING WETLAND

KEYED NOTES:

- (A) CAS ARCH PIPE
- (B) CMP ROUND
- (C) GRADE SWALE TO DRAIN
- (D) 20' W x35 'L TURN AROUND, SEE SHEET 4-5 FOR DETAIL

NOTE:

1. EXISTING GROUND SURFACE IS BASED OFF OF AERIAL DRONE TOPOGRAPHIC SURVEY. SPIKED ANOMALIES IN SURFACE WERE NOT ACCOUNTED FOR IN EARTHWORK QUANTITIES.

SURCHARGE NOTES

1. REFER TO EMBANKMENT SURCHARGE TYPICAL SECTIONS ON SHEETS 4-5.
2. REFER TO DETAILS ON SHEET 6 FOR SETTLEMENT PLATE
3. INSTALL SETTLEMENT PLATES AT LOCATIONS NOTED.
4. COVER SURCHARGE MATERIAL WITH HYDROMULCH. PAID AS RAPID STABILIZATION.
5. SEE EMBANKMENT SURCHARGE SPECIAL PROVISION FOR REMOVAL AND DISPOSAL OF SURCHARGE MATERIAL.
6. COORDINATE ACCESS AND TEMPORARY CONSTRUCTION ROUTES OF CONSTRUCTION VEHICLES, EQUIPMENT, MATERIAL DELIVERIES, AND OTHER CONSTRUCTION TRAFFIC WITH DAKOTA COUNTY.
7. ACCESS FROM PRIVATE PROPERTIES IS PROHIBITED.

N

50 0 50 100
scale 25 feet

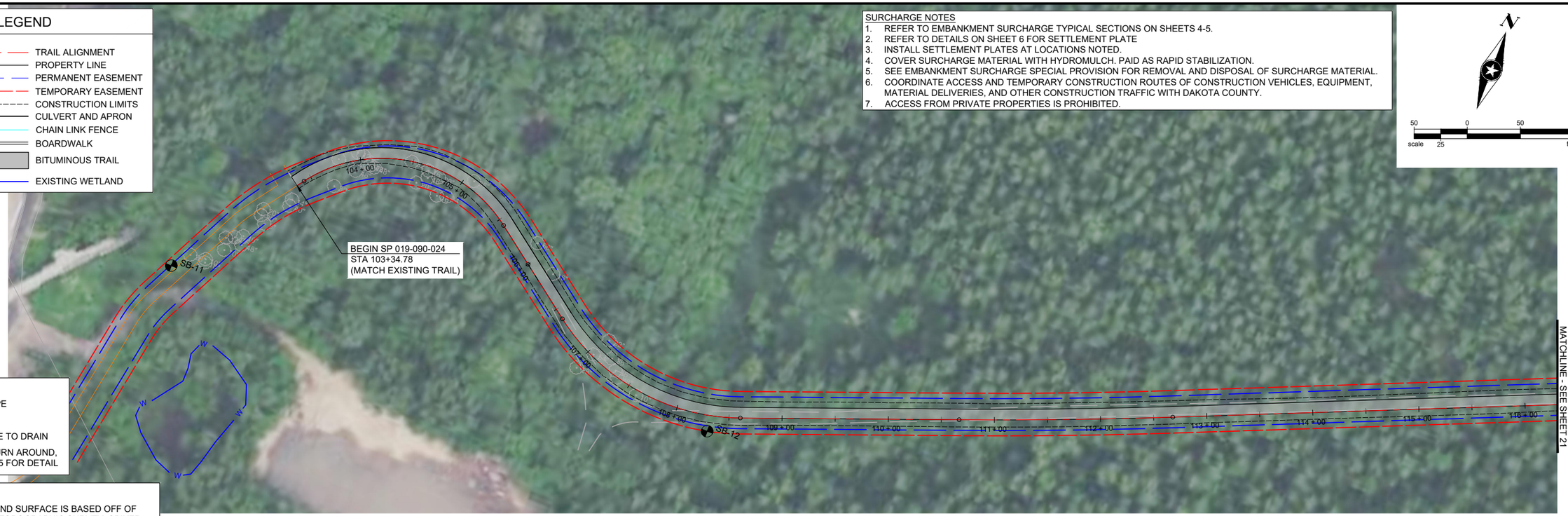

MATCHLINE - SEE SHEET 21

MINNESOTA RIVER GREENWAY - FORT SNELLING SEGMENT

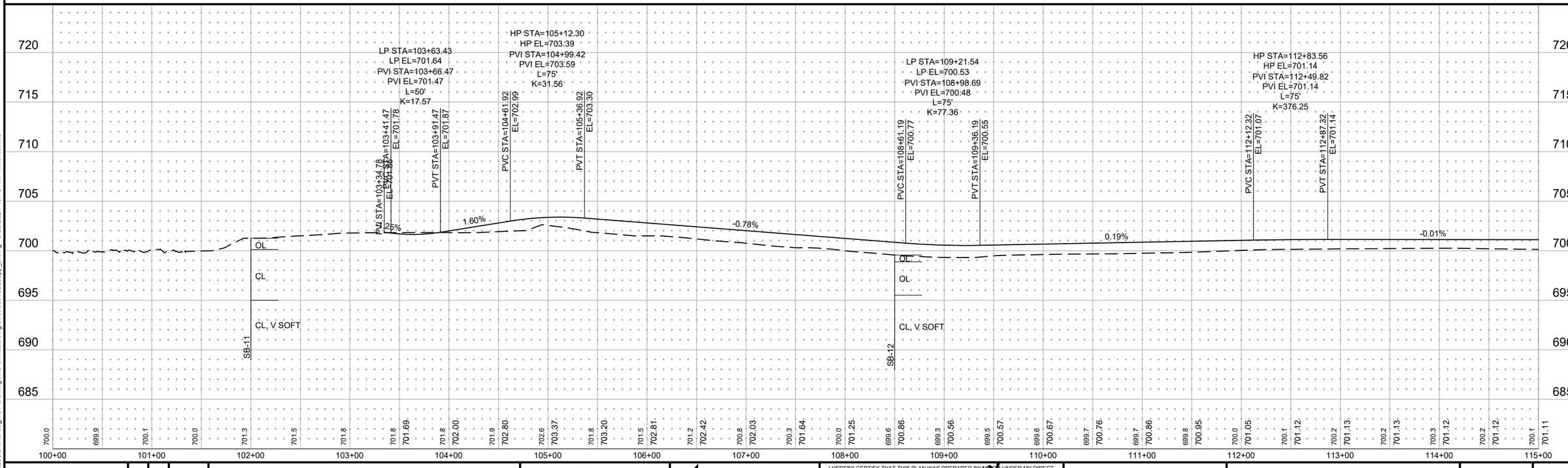

x:\aet\d\dakot\t1552805-final-dsgn\51-drawings\10-civil\cad\dwg\sheet\dc155280pp_0.dwg 5/20/2021 10:15 AM kmontebello

DRAWN BY:	KM				
DESIGNER:	KM				
CHECKED BY:	WB				
DESIGN TEAM	NO.	BY	DATE	REVISIONS	

Dakota County

SEH
PHONE: 952.912.2600
10901 RED CIRCLE DRIVE,
SUITE 300
MINNETONKA, MN 55343
www.sehinc.com

I HEREBY CERTIFY THAT THIS PLAN WAS PREPARED BY ME OR UNDER MY DIRECT SUPERVISION AND THAT I AM A DULY LICENSED PROFESSIONAL ENGINEER UNDER THE LAWS OF THE STATE OF MINNESOTA.

PRELIMINARY

XXXXXXXXXX, PE

Date: XX/XX/2020 Lic. No. XXXXX

MINNESOTA RIVER GREENWAY - FORT SNELLING SEGMENT

CONSTRUCTION PLAN AND PROFILE

SP 019-090-024

FILE NO. 155280

LEGEND

101+00	TRAIL ALIGNMENT
	PROPERTY LINE
	PERMANENT EASEMENT
	TEMPORARY EASEMENT
	CONSTRUCTION LIMITS
	CULVERT AND APRON
XC	CHAIN LINK FENCE
	BOARDWALK
	BITUMINOUS TRAIL
W	EXISTING WETLAND



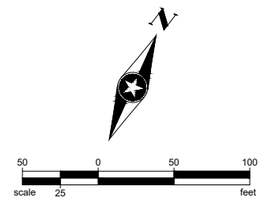

KEYED NOTES:

- A CAS ARCH PIPE
- B CMP ROUND
- C GRADE SWALE TO DRAIN
- D 20' W x35 'L TURN AROUND, SEE SHEET 4-5 FOR DETAIL

NOTE:

1. EXISTING GROUND SURFACE IS BASED OFF OF AERIAL DRONE TOPOGRAPHIC SURVEY. SPIKED ANOMALIES IN SURFACE WERE NOT ACCOUNTED FOR IN EARTHWORK QUANTITIES.

SURCHARGE NOTES

1. REFER TO EMBANKMENT SURCHARGE TYPICAL SECTIONS ON SHEETS 4-5.
2. REFER TO DETAILS ON SHEET 6 FOR SETTLEMENT PLATE
3. INSTALL SETTLEMENT PLATES AT LOCATIONS NOTED.
4. COVER SURCHARGE MATERIAL WITH HYDROMULCH. PAID AS RAPID STABILIZATION.
5. SEE EMBANKMENT SURCHARGE SPECIAL PROVISION FOR REMOVAL AND DISPOSAL OF SURCHARGE MATERIAL.
6. COORDINATE ACCESS AND TEMPORARY CONSTRUCTION ROUTES OF CONSTRUCTION VEHICLES, EQUIPMENT, MATERIAL DELIVERIES, AND OTHER CONSTRUCTION TRAFFIC WITH DAKOTA COUNTY.
7. ACCESS FROM PRIVATE PROPERTIES IS PROHIBITED.

MINNESOTA RIVER GREENWAY - FORT SNELLING SEGMENT

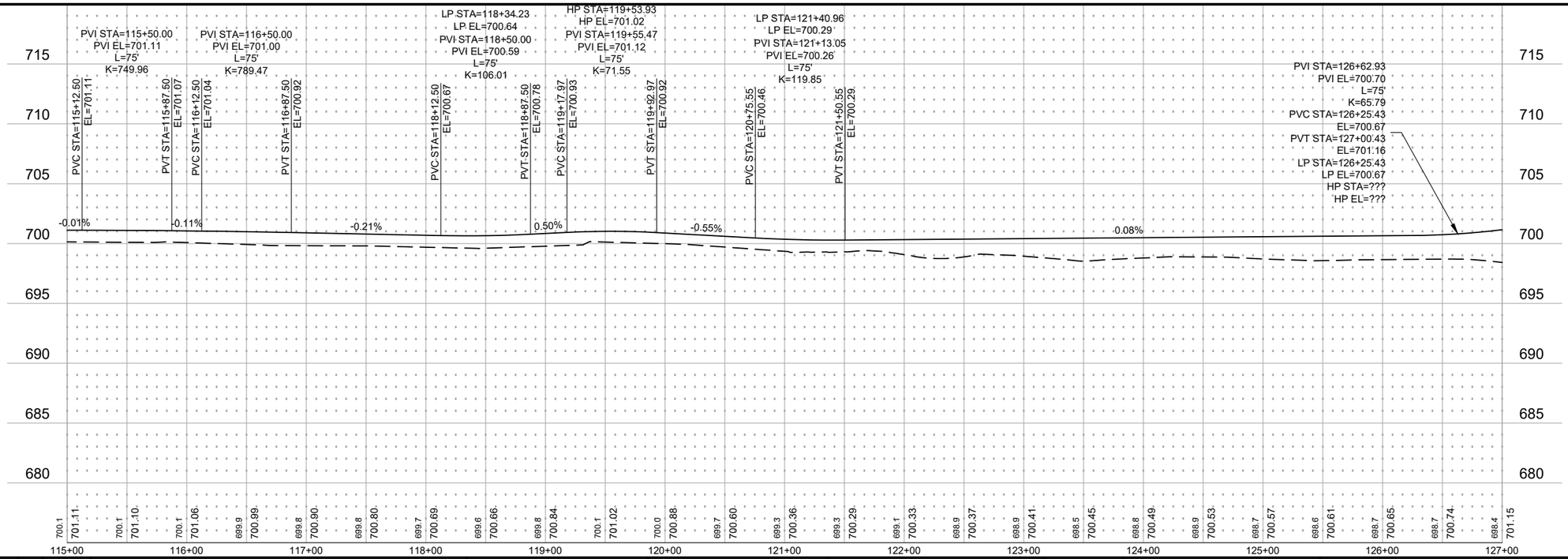

DRAWN BY:	KM			
DESIGNER:	KM			
CHECKED BY:	WB			
DESIGN TEAM		NO.	BY	DATE	REVISIONS

Dakota COUNTY

SEH
PHONE: 952.912.2600
10901 RED CIRCLE DRIVE, SUITE 300
MINNETONKA, MN 55343
www.sehinc.com

I HEREBY CERTIFY THAT THIS PLAN WAS PREPARED BY ME OR UNDER MY DIRECT SUPERVISION AND THAT I AM A DULY LICENSED PROFESSIONAL ENGINEER UNDER THE LAWS OF THE STATE OF MINNESOTA.

PRELIMINARY

XXXXXXXXXXXX, PE

Date: XX/XX/2020 Lic. No. XXXXX

MINNESOTA RIVER GREENWAY - FORT SNELLING SEGMENT

CONSTRUCTION PLAN AND PROFILE

SP 019-090-024

FILE NO. 155280

x:\ae\d\dakot\155280\5-final-dsgn\51-drawings\10-civil\cad\dwg\sheet\dc155280pp_0.dwg 5/20/2021 10:15 AM kmontebello

LEGEND

- TRAIL ALIGNMENT (101+00)
- PROPERTY LINE
- PERMANENT EASEMENT
- TEMPORARY EASEMENT
- CONSTRUCTION LIMITS
- CULVERT AND APRON
- CHAIN LINK FENCE (XC)
- BOARDWALK
- BITUMINOUS TRAIL
- EXISTING WETLAND (W)

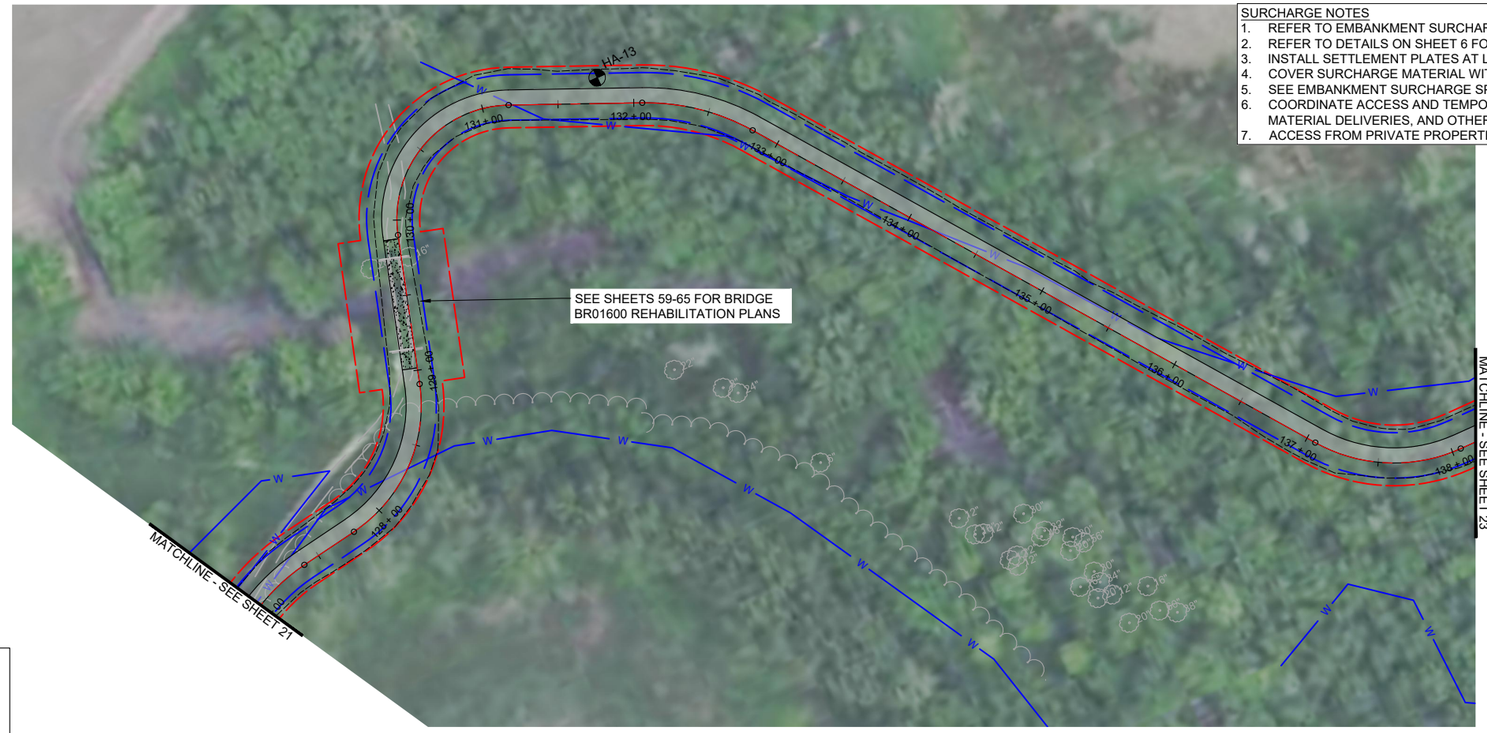

SURCHARGE NOTES

1. REFER TO EMBANKMENT SURCHARGE TYPICAL SECTIONS ON SHEETS 4-5.
2. REFER TO DETAILS ON SHEET 6 FOR SETTLEMENT PLATE
3. INSTALL SETTLEMENT PLATES AT LOCATIONS NOTED.
4. COVER SURCHARGE MATERIAL WITH HYDROMULCH. PAID AS RAPID STABILIZATION.
5. SEE EMBANKMENT SURCHARGE SPECIAL PROVISION FOR REMOVAL AND DISPOSAL OF SURCHARGE MATERIAL.
6. COORDINATE ACCESS AND TEMPORARY CONSTRUCTION ROUTES OF CONSTRUCTION VEHICLES, EQUIPMENT, MATERIAL DELIVERIES, AND OTHER CONSTRUCTION TRAFFIC WITH DAKOTA COUNTY.
7. ACCESS FROM PRIVATE PROPERTIES IS PROHIBITED.

KEYED NOTES:

- (A) CAS ARCH PIPE
- (B) CMP ROUND
- (C) GRADE SWALE TO DRAIN
- (D) 20' W x35 'L TURN AROUND, SEE SHEET 4-5 FOR DETAIL

NOTE:

1. EXISTING GROUND SURFACE IS BASED OFF OF AERIAL DRONE TOPOGRAPHIC SURVEY. SPIKED ANOMALIES IN SURFACE WERE NOT ACCOUNTED FOR IN EARTHWORK QUANTITIES.

N

50 0 50 100
scale 25 feet

MINNESOTA RIVER GREENWAY - FORT SNELLING SEGMENT

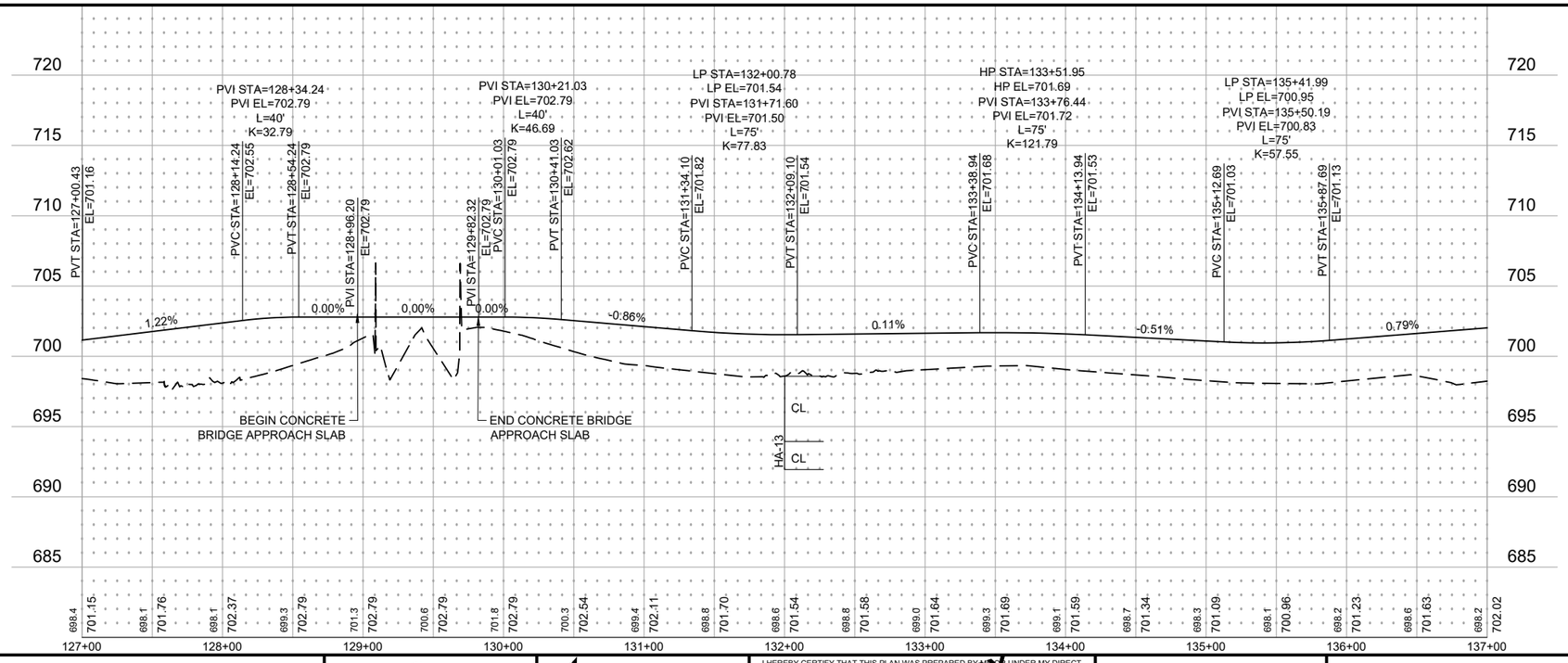

DRAWN BY: KM							
DESIGNER: KM							
CHECKED BY: WB							
DESIGN TEAM	NO.	BY	DATE	REVISIONS			

Dakota County

SEH
PHONE: 952.912.2600
10901 RED CIRCLE DRIVE, SUITE 300
MINNETONKA, MN 55343
www.sehinc.com

I HEREBY CERTIFY THAT THIS PLAN WAS PREPARED BY ME OR UNDER MY DIRECT SUPERVISION AND THAT I AM A DULY LICENSED PROFESSIONAL ENGINEER UNDER THE LAWS OF THE STATE OF MINNESOTA.

PRELIMINARY

XXXXXXXXXX, PE

Date: XX/XX/2020 Lic. No. XXXXX

MINNESOTA RIVER GREENWAY - FORT SNELLING SEGMENT

CONSTRUCTION PLAN AND PROFILE

SP 019-090-024

FILE NO. 155280

22 / 119

x:\ae\d\dakot\t1552805-final-dsgn\51-drawings\10-civil\cad\dwg\sheet\dc155280pp_0.dwg 5/20/2021 10:15 AM kmontebello

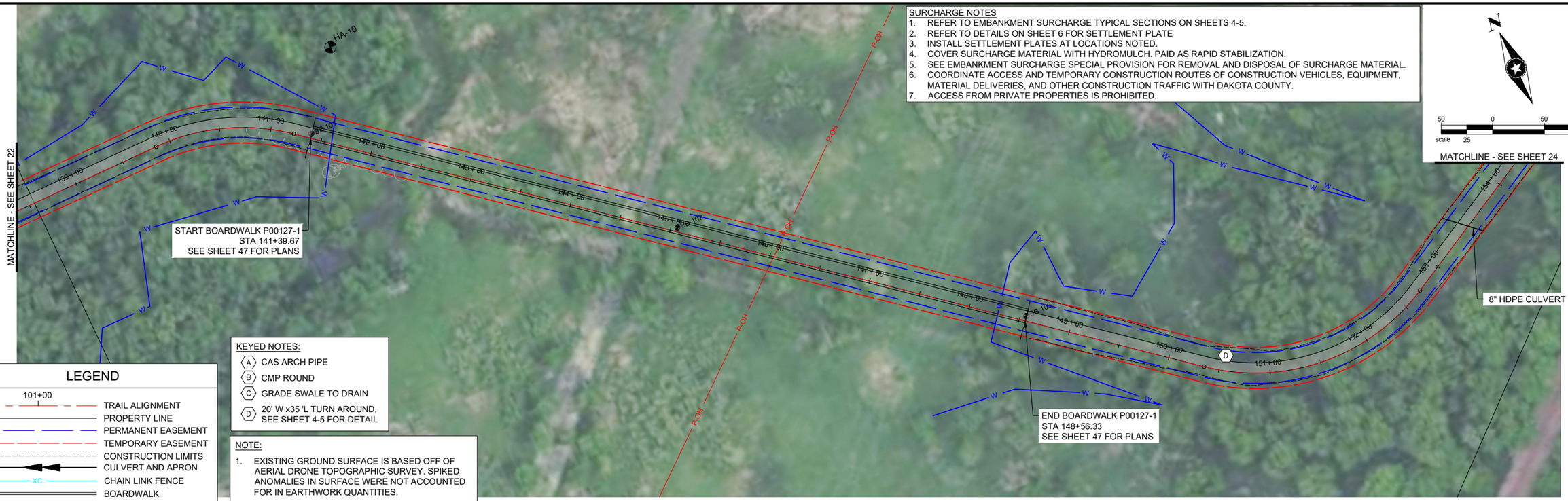

SURCHARGE NOTES
1. REFER TO EMBANKMENT SURCHARGE TYPICAL SECTIONS ON SHEETS 4-5.
2. REFER TO DETAILS ON SHEET 6 FOR SETTLEMENT PLATE
3. INSTALL SETTLEMENT PLATES AT LOCATIONS NOTED.
4. COVER SURCHARGE MATERIAL WITH HYDROMULCH. PAID AS RAPID STABILIZATION.
5. SEE EMBANKMENT SURCHARGE SPECIAL PROVISION FOR REMOVAL AND DISPOSAL OF SURCHARGE MATERIAL.
6. COORDINATE ACCESS AND TEMPORARY CONSTRUCTION ROUTES OF CONSTRUCTION VEHICLES, EQUIPMENT, MATERIAL DELIVERIES, AND OTHER CONSTRUCTION TRAFFIC WITH DAKOTA COUNTY.
7. ACCESS FROM PRIVATE PROPERTIES IS PROHIBITED.

N

50 0 50 100
scale 25 feet

LEGEND

101+00

- TRAIL ALIGNMENT
- PROPERTY LINE
- PERMANENT EASEMENT
- TEMPORARY EASEMENT
- CONSTRUCTION LIMITS
- CULVERT AND APRON
- XC — CHAIN LINK FENCE
- BOARDWALK
- BITUMINOUS TRAIL
- W — EXISTING WETLAND

KEYED NOTES:
- A CAS ARCH PIPE
- B CMP ROUND
- C GRADE SWALE TO DRAIN
- D 20' W x35 'L TURN AROUND, SEE SHEET 4-5 FOR DETAIL

NOTE:
1. EXISTING GROUND SURFACE IS BASED OFF OF AERIAL DRONE TOPOGRAPHIC SURVEY. SPIKED ANOMALIES IN SURFACE WERE NOT ACCOUNTED FOR IN EARTHWORK QUANTITIES.

MINNESOTA RIVER GREENWAY - FORT SNELLING SEGMENT

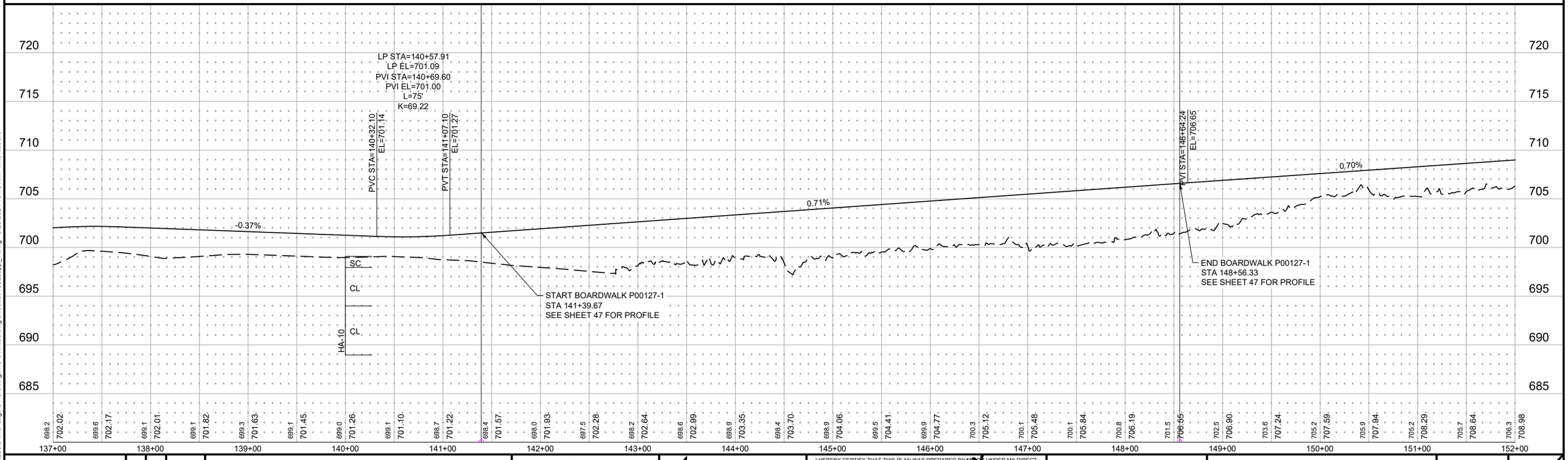

x:\ae\d\dakot\t1552805-final-dsgn\51-drawings\10-civil\cad\dwg\sheet\dc155280pp_1.dwg 5/20/2021 10:18 AM kmontebello

DRAWN BY:	KM
DESIGNER:	KM
CHECKED BY:	WB
DESIGN TEAM	

NO.	BY	DATE	REVISIONS

Dakota County

SEH
PHONE: 952.912.2600
10901 RED CIRCLE DRIVE,
SUITE 300
MINNETONKA, MN 55343
www.sehinc.com

I HEREBY CERTIFY THAT THIS PLAN WAS PREPARED BY ME OR UNDER MY DIRECT SUPERVISION AND THAT I AM A DULY LICENSED PROFESSIONAL ENGINEER UNDER THE LAWS OF THE STATE OF MINNESOTA.

PRELIMINARY

XXXXXXXXXX, PE

Date: XX/XX/2020 Lic. No. XXXXX

MINNESOTA RIVER GREENWAY - FORT SNELLING SEGMENT

CONSTRUCTION PLAN AND PROFILE

SP 019-090-024

FILE NO. 155280

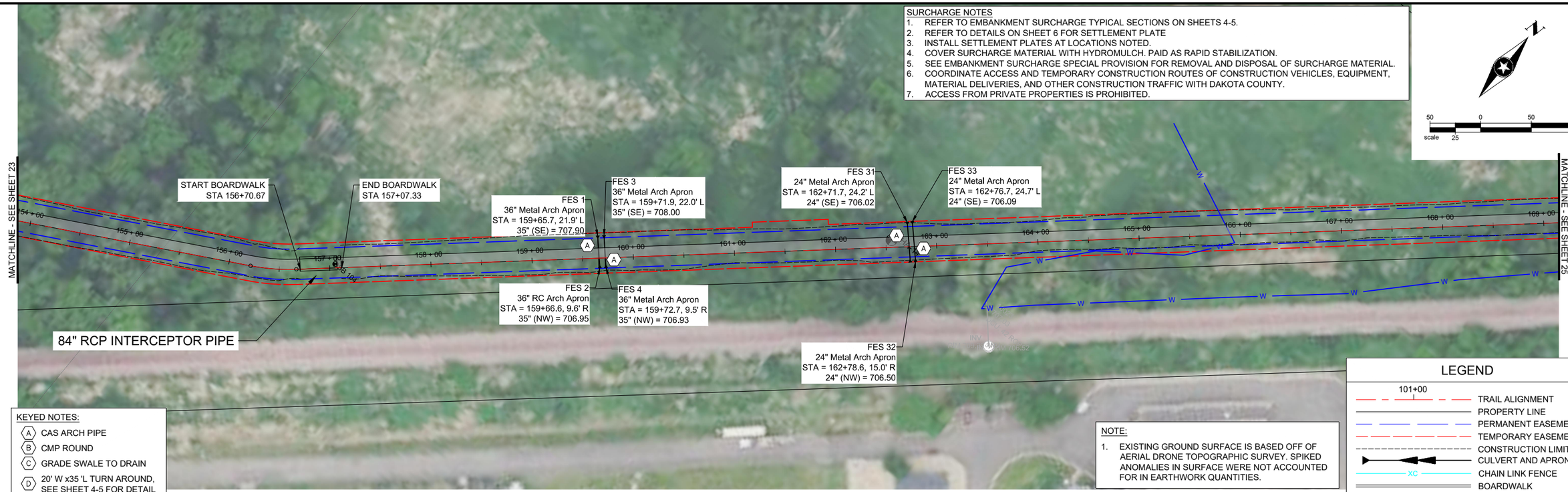

SURCHARGE NOTES
1. REFER TO EMBANKMENT SURCHARGE TYPICAL SECTIONS ON SHEETS 4-5.
2. REFER TO DETAILS ON SHEET 6 FOR SETTLEMENT PLATE
3. INSTALL SETTLEMENT PLATES AT LOCATIONS NOTED.
4. COVER SURCHARGE MATERIAL WITH HYDROMULCH. PAID AS RAPID STABILIZATION.
5. SEE EMBANKMENT SURCHARGE SPECIAL PROVISION FOR REMOVAL AND DISPOSAL OF SURCHARGE MATERIAL.
6. COORDINATE ACCESS AND TEMPORARY CONSTRUCTION ROUTES OF CONSTRUCTION VEHICLES, EQUIPMENT, MATERIAL DELIVERIES, AND OTHER CONSTRUCTION TRAFFIC WITH DAKOTA COUNTY.
7. ACCESS FROM PRIVATE PROPERTIES IS PROHIBITED.

scale 25: 50 0 50 100 feet

KEYED NOTES:
- (A) CAS ARCH PIPE
- (B) CMP ROUND
- (C) GRADE SWALE TO DRAIN
- (D) 20' W x35 'L TURN AROUND, SEE SHEET 4-5 FOR DETAIL

NOTE:
1. EXISTING GROUND SURFACE IS BASED OFF OF AERIAL DRONE TOPOGRAPHIC SURVEY. SPIKED ANOMALIES IN SURFACE WERE NOT ACCOUNTED FOR IN EARTHWORK QUANTITIES.

LEGEND
- 101+00
- TRAIL ALIGNMENT
- PROPERTY LINE
- PERMANENT EASEMENT
- TEMPORARY EASEMENT
- CONSTRUCTION LIMITS
- CULVERT AND APRON
- XC — CHAIN LINK FENCE
- BOARDWALK
- BITUMINOUS TRAIL
- W — EXISTING WETLAND

MINNESOTA RIVER GREENWAY - FORT SNELLING SEGMENT

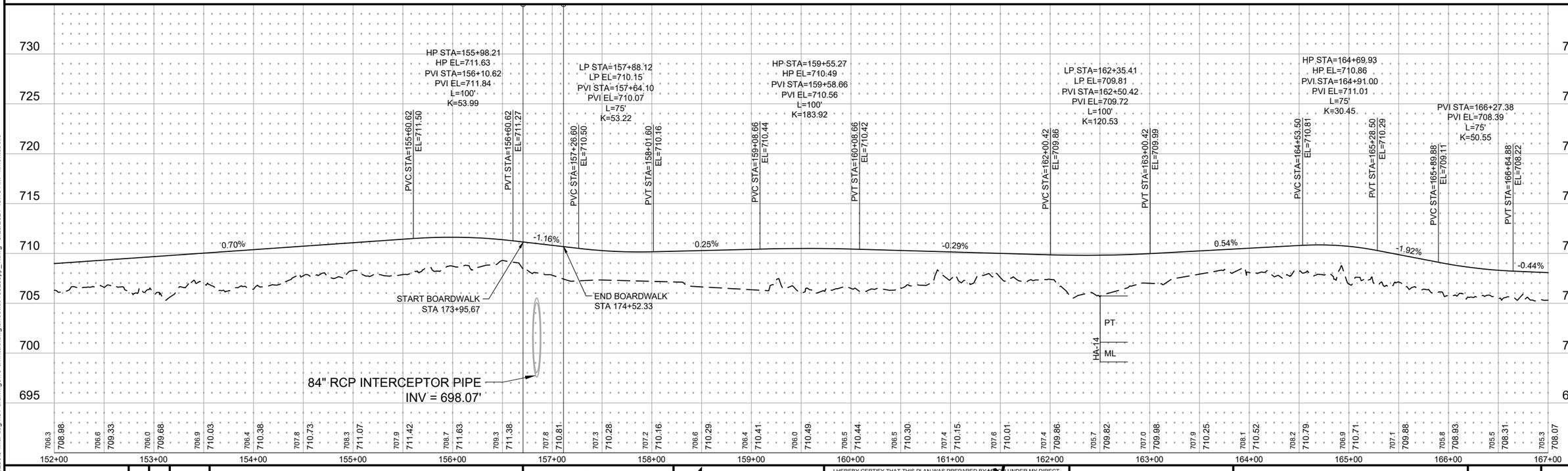

DRAWN BY:	DESIGNER:	CHECKED BY:	DESIGN TEAM
VKCB1	KRW1	RWB	

NO.	BY	DATE	REVISIONS

Dakota COUNTY

SEH
PHONE: 952.912.2600
10901 RED CIRCLE DRIVE,
SUITE 300
MINNETONKA, MN 55343
www.sehinc.com

I HEREBY CERTIFY THAT THIS PLAN WAS PREPARED BY ME OR UNDER MY DIRECT SUPERVISION AND THAT I AM A DULY LICENSED PROFESSIONAL ENGINEER UNDER THE LAWS OF THE STATE OF MINNESOTA.

PRELIMINARY

XXXXXXXXXX, PE
Date: XX/XX/2020 Lic. No. XXXXX

MINNESOTA RIVER GREENWAY - FORT SNELLING SEGMENT

CONSTRUCTION PLAN AND PROFILE

SP 019-090-024

FILE NO. 155280

x:\ae\d\dakota\t1552805-final-dsgn\51-drawings\10-civil\cad\dwg\sheet\dc155280pp_1.dwg 5/20/2021 10:18 AM kmontebello

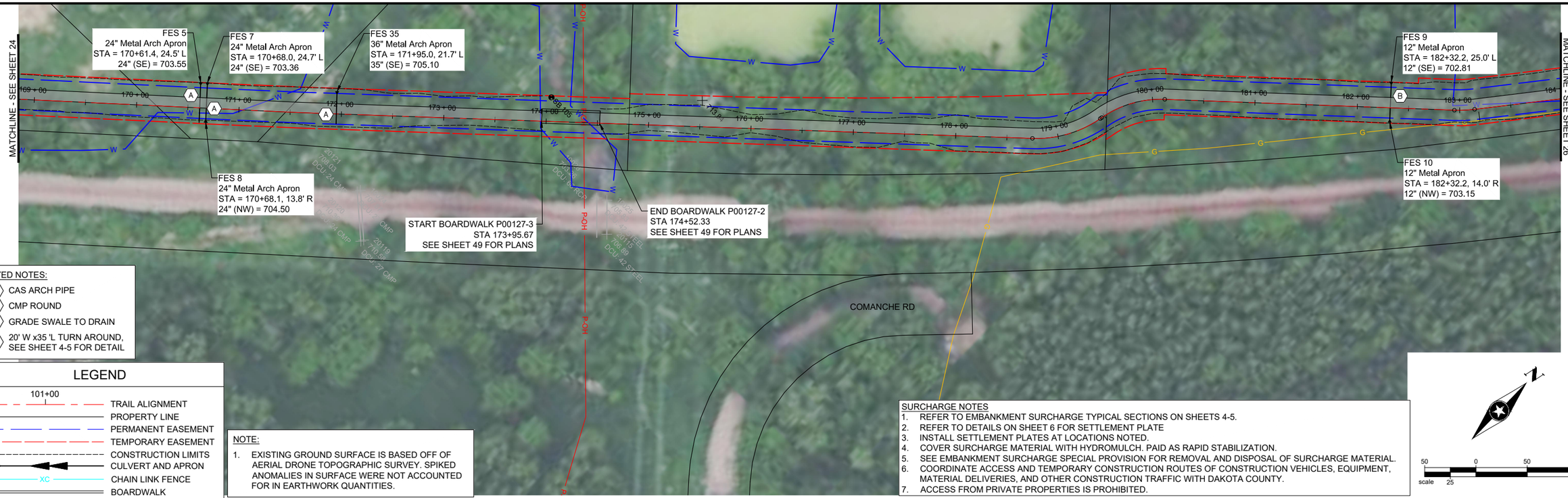

MINNESOTA RIVER GREENWAY - FORT SNELLING SEGMENT

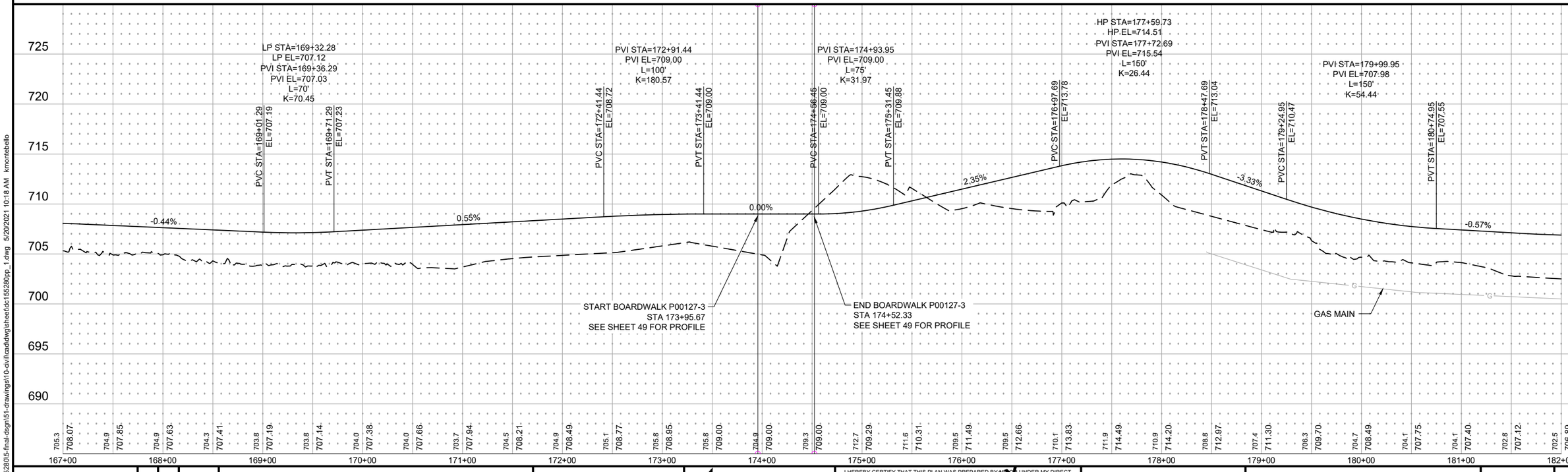

DRAWN BY: KM	NO.	BY	DATE	REVISIONS
DESIGNER: KM				
CHECKED BY: WB				
DESIGN TEAM				

Dakota County

SEH
PHONE: 952.912.2600
10901 RED CIRCLE DRIVE, SUITE 300
MINNETONKA, MN 55343
www.sehinc.com

I HEREBY CERTIFY THAT THIS PLAN WAS PREPARED BY ME OR UNDER MY DIRECT SUPERVISION AND THAT I AM A DULY LICENSED PROFESSIONAL ENGINEER UNDER THE LAWS OF THE STATE OF MINNESOTA.

PRELIMINARY

XXXXXXXXXX, PE

Date: XX/XX/2020 Lic. No. XXXXX

MINNESOTA RIVER GREENWAY - FORT SNELLING SEGMENT

CONSTRUCTION PLAN AND PROFILE

SP 019-090-024

FILE NO. 155280

25 / 119

x:\aec\d\dakot\t1552805-final-dsgn\51-drawings\10-civil\cad\dwg\sheet\dc155280pp_1.dwg 5/20/2021 10:18 AM kmontebello

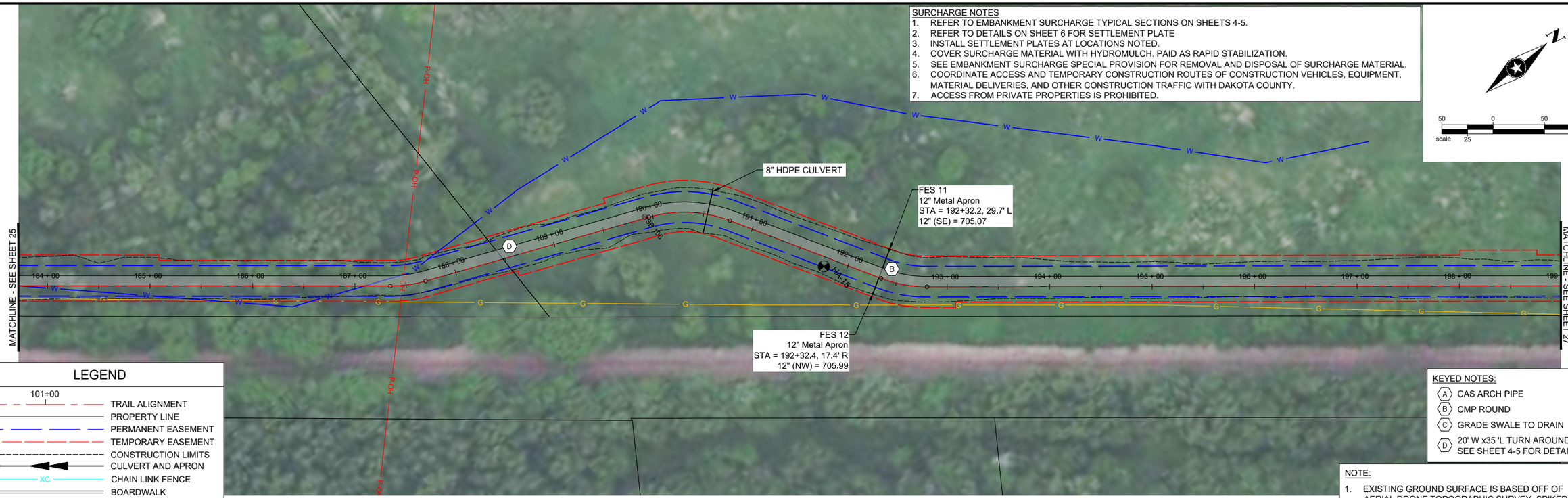

MINNESOTA RIVER GREENWAY - FORT SNELLING SEGMENT

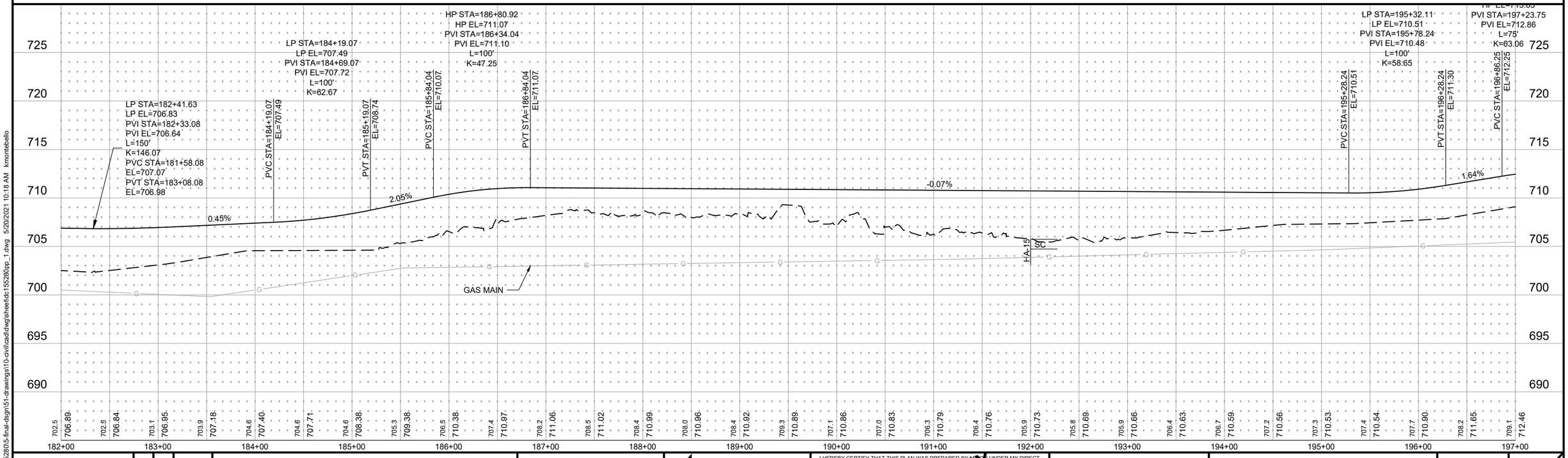

DRAWN BY: KM
DESIGNER: KM
CHECKED BY: WB
DESIGN TEAM

NO.	BY	DATE	REVISIONS

Dakota County

SEH
PHONE: 952.912.2600
10901 RED CIRCLE DRIVE, SUITE 300
MINNETONKA, MN 55343
www.sehinc.com

I HEREBY CERTIFY THAT THIS PLAN WAS PREPARED BY ME OR UNDER MY DIRECT SUPERVISION AND THAT I AM A DULY LICENSED PROFESSIONAL ENGINEER UNDER THE LAWS OF THE STATE OF MINNESOTA.

PRELIMINARY

XXXXXXXXXX, PE
Date: XX/XX/2020 Lic. No. XXXXX

MINNESOTA RIVER GREENWAY - FORT SNELLING SEGMENT

CONSTRUCTION PLAN AND PROFILE

SP 019-090-024

FILE NO. 155280

x:\aet\d\dakot\t1552805-final-dsgn\51-drawings\10-civil\cad\dwg\sheet\dc155280pp_1.dwg 5/20/2021 10:18 AM kmontebello

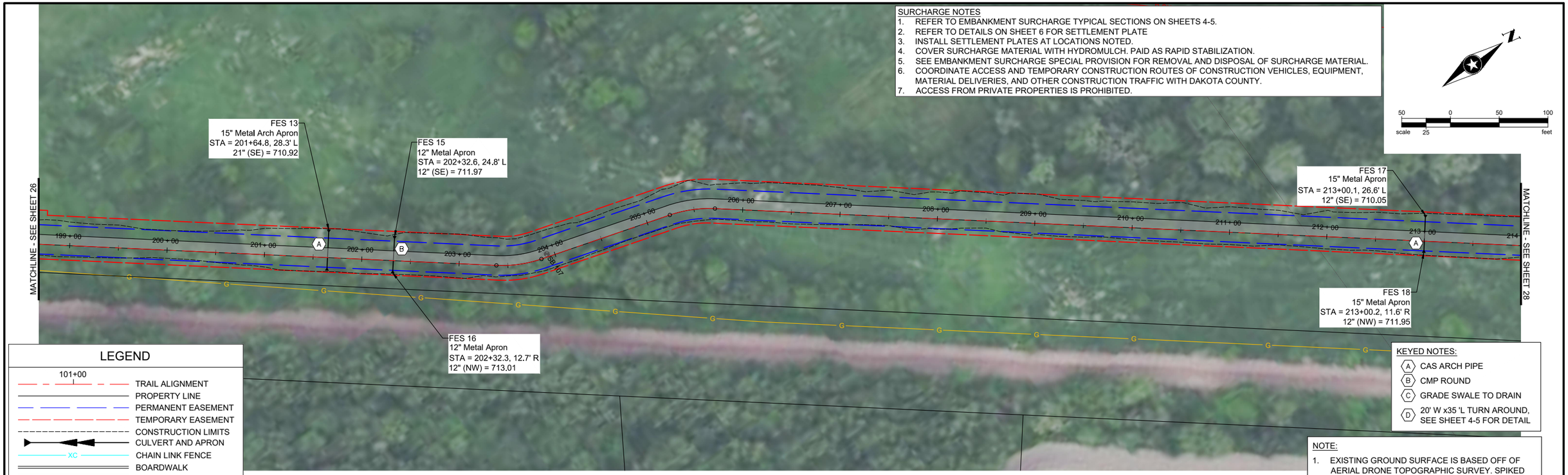

SURCHARGE NOTES

1. REFER TO EMBANKMENT SURCHARGE TYPICAL SECTIONS ON SHEETS 4-5.
2. REFER TO DETAILS ON SHEET 6 FOR SETTLEMENT PLATE
3. INSTALL SETTLEMENT PLATES AT LOCATIONS NOTED.
4. COVER SURCHARGE MATERIAL WITH HYDROMULCH. PAID AS RAPID STABILIZATION.
5. SEE EMBANKMENT SURCHARGE SPECIAL PROVISION FOR REMOVAL AND DISPOSAL OF SURCHARGE MATERIAL.
6. COORDINATE ACCESS AND TEMPORARY CONSTRUCTION ROUTES OF CONSTRUCTION VEHICLES, EQUIPMENT, MATERIAL DELIVERIES, AND OTHER CONSTRUCTION TRAFFIC WITH DAKOTA COUNTY.
7. ACCESS FROM PRIVATE PROPERTIES IS PROHIBITED.

LEGEND

- 101+00
- TRAIL ALIGNMENT
- PROPERTY LINE
- PERMANENT EASEMENT
- TEMPORARY EASEMENT
- CONSTRUCTION LIMITS
- CULVERT AND APRON
- XC — CHAIN LINK FENCE
- BOARDWALK
- BITUMINOUS TRAIL
- W — EXISTING WETLAND

KEYED NOTES:

- (A) CAS ARCH PIPE
- (B) CMP ROUND
- (C) GRADE SWALE TO DRAIN
- (D) 20' W x35 'L TURN AROUND, SEE SHEET 4-5 FOR DETAIL

NOTE:

1. EXISTING GROUND SURFACE IS BASED OFF OF AERIAL DRONE TOPOGRAPHIC SURVEY. SPIKED ANOMALIES IN SURFACE WERE NOT ACCOUNTED FOR IN EARTHWORK QUANTITIES.

MINNESOTA RIVER GREENWAY - FORT SNELLING SEGMENT

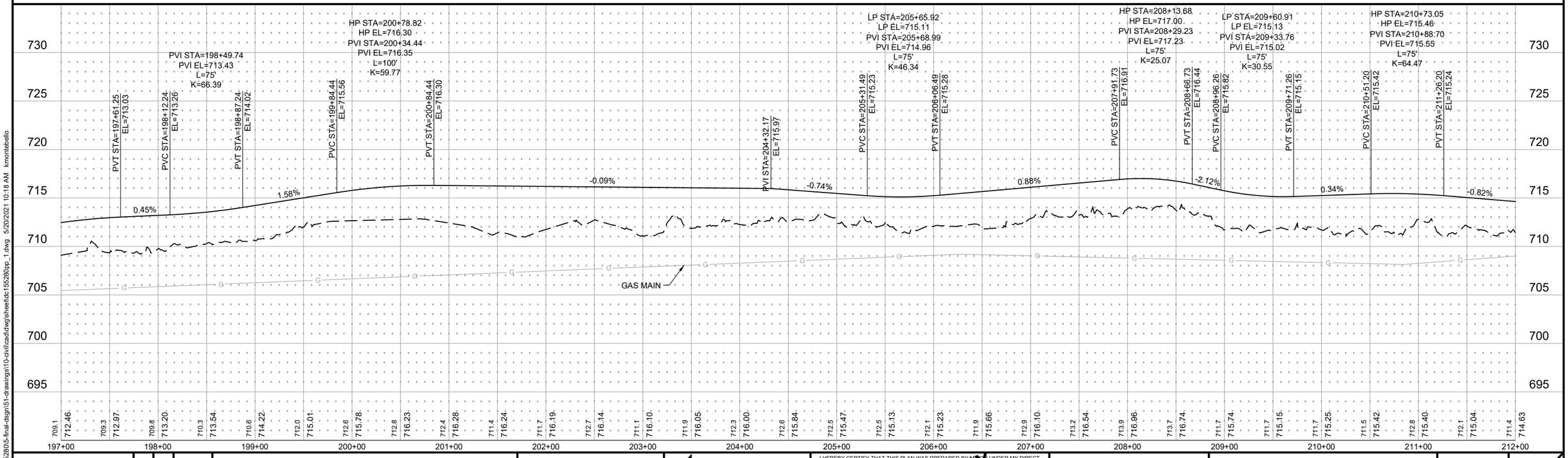

DRAWN BY: KM					
DESIGNER: KM					
CHECKED BY: WB					
DESIGN TEAM	NO.	BY	DATE	REVISIONS	

Dakota County

SEH
PHONE: 952.912.2600
10901 RED CIRCLE DRIVE,
SUITE 300
MINNETONKA, MN 55343
www.sehinc.com

I HEREBY CERTIFY THAT THIS PLAN WAS PREPARED BY ME OR UNDER MY DIRECT SUPERVISION AND THAT I AM A DULY LICENSED PROFESSIONAL ENGINEER UNDER THE LAWS OF THE STATE OF MINNESOTA.

PRELIMINARY

XXXXXXXXXX, PE

Date: XX/XX/2020 Lic. No. XXXXX

MINNESOTA RIVER GREENWAY - FORT SNELLING SEGMENT

CONSTRUCTION PLAN AND PROFILE

SP 019-090-024

FILE NO. 155280

27 / 119

x:\ae\d\dakota\t\1552805-final-dsgn\51-drawings\10-civil\cad\dwg\sheet\dc155280pp_1.dwg 5/20/2021 10:18 AM kmontebello

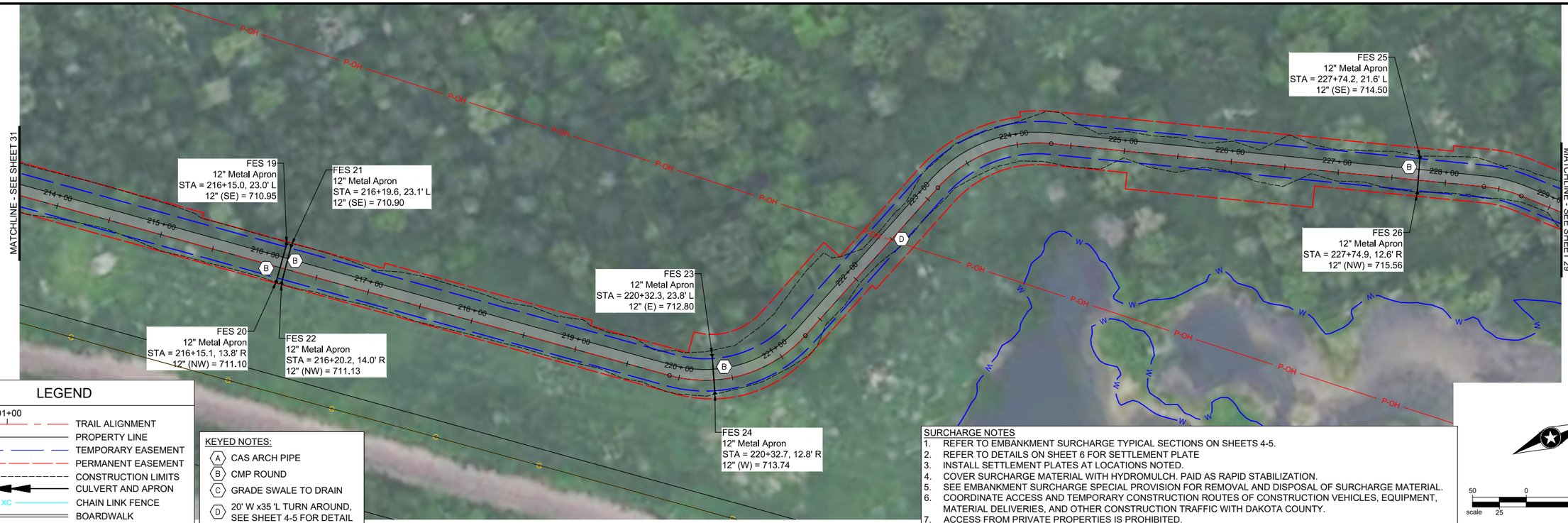

LEGEND

101+00

- TRAIL ALIGNMENT
- PROPERTY LINE
- TEMPORARY EASEMENT
- PERMANENT EASEMENT
- CONSTRUCTION LIMITS
- CULVERT AND APRON
- XC — CHAIN LINK FENCE
- BOARDWALK
- BITUMINOUS TRAIL
- W — EXISTING WETLAND

KEYED NOTES:

- (A) CAS ARCH PIPE
- (B) CMP ROUND
- (C) GRADE SWALE TO DRAIN
- (D) 20' W x35 'L TURN AROUND, SEE SHEET 4-5 FOR DETAIL

SURCHARGE NOTES

1. REFER TO EMBANKMENT SURCHARGE TYPICAL SECTIONS ON SHEETS 4-5.
2. REFER TO DETAILS ON SHEET 6 FOR SETTLEMENT PLATE
3. INSTALL SETTLEMENT PLATES AT LOCATIONS NOTED.
4. COVER SURCHARGE MATERIAL WITH HYDROMULCH. PAID AS RAPID STABILIZATION.
5. SEE EMBANKMENT SURCHARGE SPECIAL PROVISION FOR REMOVAL AND DISPOSAL OF SURCHARGE MATERIAL.
6. COORDINATE ACCESS AND TEMPORARY CONSTRUCTION ROUTES OF CONSTRUCTION VEHICLES, EQUIPMENT, MATERIAL DELIVERIES, AND OTHER CONSTRUCTION TRAFFIC WITH DAKOTA COUNTY.
7. ACCESS FROM PRIVATE PROPERTIES IS PROHIBITED.

scale 50 0 50 100 feet, 25

MINNESOTA RIVER GREENWAY - FORT SNELLING SEGMENT

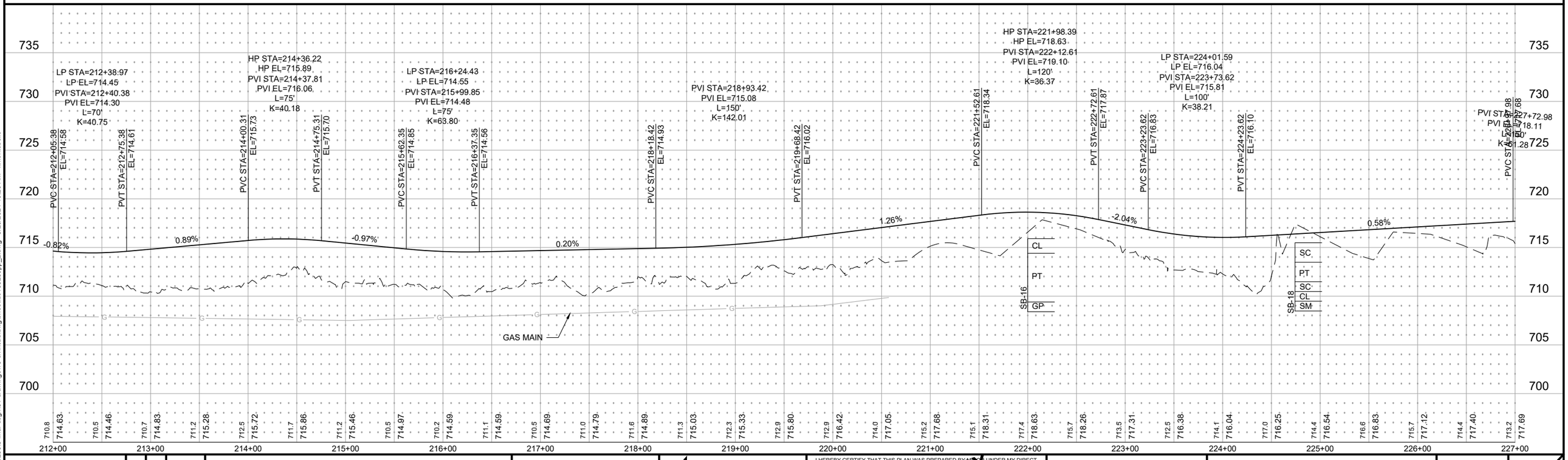

DRAWN BY:	KM
DESIGNER:	KM
CHECKED BY:	WB
DESIGN TEAM	

NO.	BY	DATE	REVISIONS

Dakota County

SEH
PHONE: 952.912.2600
10901 RED CIRCLE DRIVE,
SUITE 300
MINNETONKA, MN 55343
www.sehinc.com

I HEREBY CERTIFY THAT THIS PLAN WAS PREPARED BY ME OR UNDER MY DIRECT SUPERVISION AND THAT I AM A DULY LICENSED PROFESSIONAL ENGINEER UNDER THE LAWS OF THE STATE OF MINNESOTA.

PRELIMINARY

XXXXXXXXXXXX, PE

Date: XX/XX/2020 Lic. No. XXXXX

MINNESOTA RIVER GREENWAY - FORT SNELLING SEGMENT

CONSTRUCTION PLAN AND PROFILE

SP 019-090-024

FILE NO. 155280

28 / 119

x:\aet\d\dakot\t1552805-final-dsgn\51-drawings\10-civil\cad\dwg\sheet\dc155280pp_2.dwg 5/20/2021 10:20 AM kmontebello

LEGEND

101+00

- TRAIL ALIGNMENT
- PROPERTY LINE
- TEMPORARY EASEMENT
- PERMANENT EASEMENT
- CONSTRUCTION LIMITS
- CULVERT AND APRON
- XC — CHAIN LINK FENCE
- BOARDWALK
- BITUMINOUS TRAIL
- W — EXISTING WETLAND

NOTE:
1. EXISTING GROUND SURFACE IS BASED OFF OF AERIAL DRONE TOPOGRAPHIC SURVEY. SPIKED ANOMALIES IN SURFACE WERE NOT ACCOUNTED FOR IN EARTHWORK QUANTITIES.

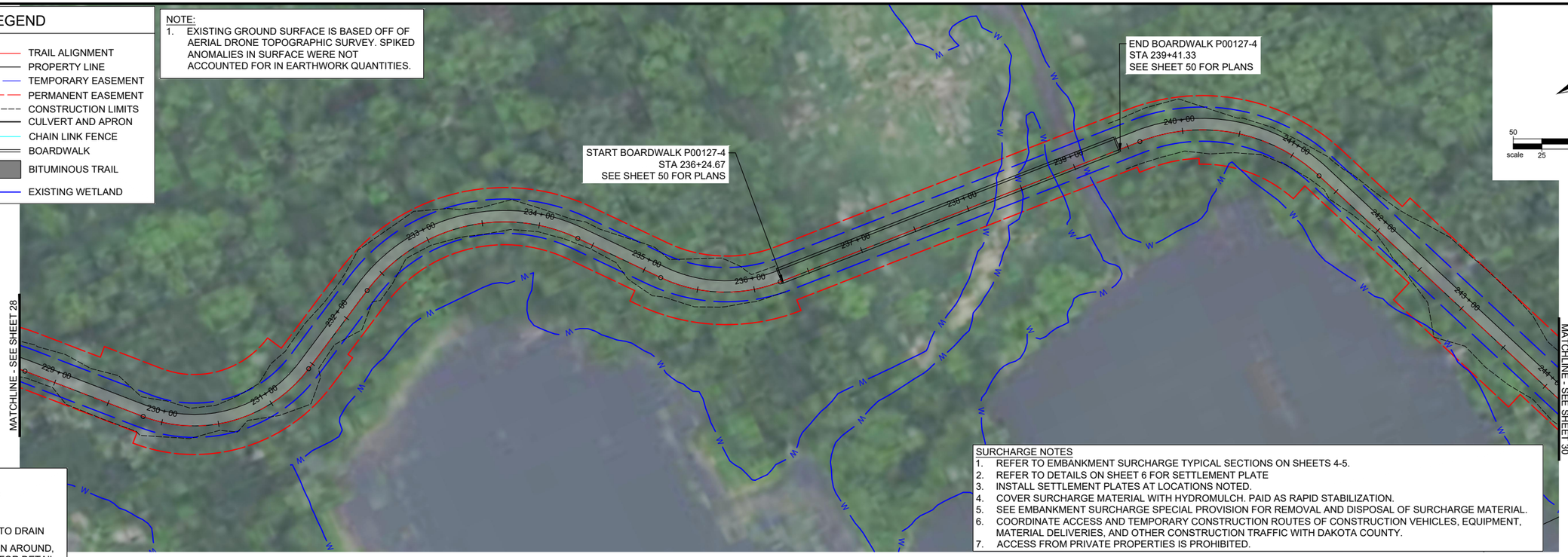

KEYED NOTES:
- (A) CAS ARCH PIPE
- (B) CMP ROUND
- (C) GRADE SWALE TO DRAIN
- (D) 20' W x35 'L TURN AROUND, SEE SHEET 4-5 FOR DETAIL

SURCHARGE NOTES
1. REFER TO EMBANKMENT SURCHARGE TYPICAL SECTIONS ON SHEETS 4-5.
2. REFER TO DETAILS ON SHEET 6 FOR SETTLEMENT PLATE
3. INSTALL SETTLEMENT PLATES AT LOCATIONS NOTED.
4. COVER SURCHARGE MATERIAL WITH HYDROMULCH. PAID AS RAPID STABILIZATION.
5. SEE EMBANKMENT SURCHARGE SPECIAL PROVISION FOR REMOVAL AND DISPOSAL OF SURCHARGE MATERIAL.
6. COORDINATE ACCESS AND TEMPORARY CONSTRUCTION ROUTES OF CONSTRUCTION VEHICLES, EQUIPMENT, MATERIAL DELIVERIES, AND OTHER CONSTRUCTION TRAFFIC WITH DAKOTA COUNTY.
7. ACCESS FROM PRIVATE PROPERTIES IS PROHIBITED.

MINNESOTA RIVER GREENWAY - FORT SNELLING SEGMENT

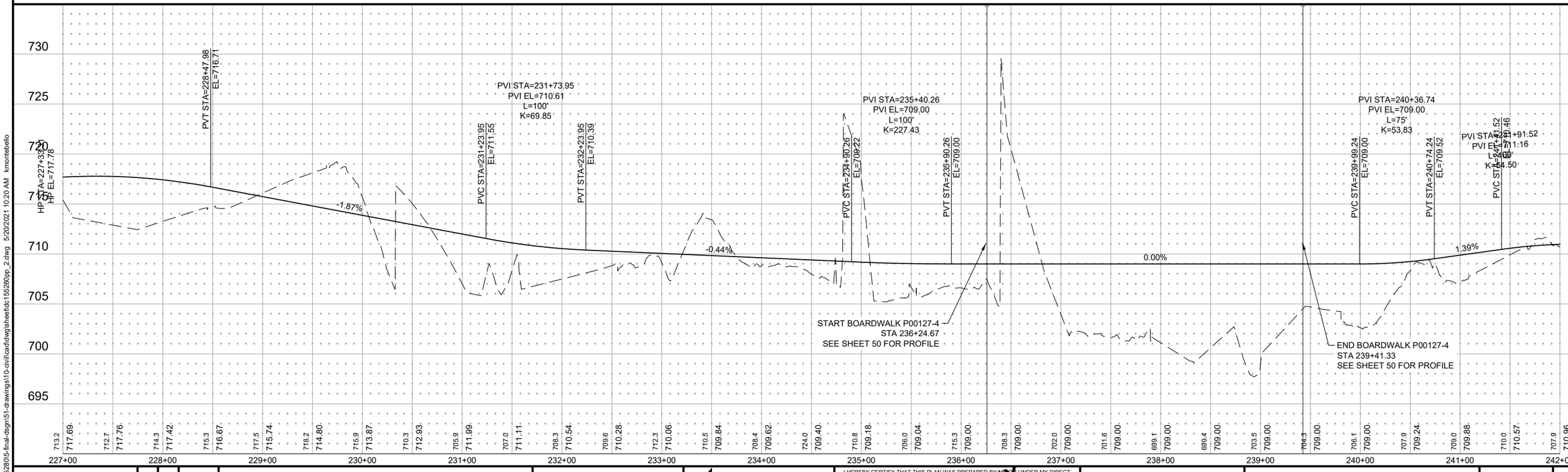

x:\ae\d\dakot\t1552805-final-dsgn\51-drawings\10-civil\cad\dwg\sheet\dc155280pp_2.dwg 5/20/2021 10:20 AM kmontebello

DRAWN BY: KM					
DESIGNER: KM					
CHECKED BY: WB					
DESIGN TEAM	NO.	BY	DATE	REVISIONS	

Dakota County

SEH
PHONE: 952.912.2600
10901 RED CIRCLE DRIVE, SUITE 300
MINNETONKA, MN 55343
www.sehinc.com

I HEREBY CERTIFY THAT THIS PLAN WAS PREPARED BY ME OR UNDER MY DIRECT SUPERVISION AND THAT I AM A DULY LICENSED PROFESSIONAL ENGINEER UNDER THE LAWS OF THE STATE OF MINNESOTA.

PRELIMINARY

XXXXXXXXXX, PE
Date: XX/XX/2020 Lic. No. XXXXX

MINNESOTA RIVER GREENWAY - FORT SNELLING SEGMENT

CONSTRUCTION PLAN AND PROFILE

SP 019-090-024

FILE NO. 155280

LEGEND

101+00

- TRAIL ALIGNMENT
- PROPERTY LINE
- TEMPORARY EASEMENT
- PERMANENT EASEMENT
- CONSTRUCTION LIMITS
- CULVERT AND APRON
- XC — CHAIN LINK FENCE
- BOARDWALK
- BITUMINOUS TRAIL
- W — EXISTING WETLAND

KEYED NOTES:

- (A) CAS ARCH PIPE
- (B) CMP ROUND
- (C) GRADE SWALE TO DRAIN
- (D) 20' W x35 'L TURN AROUND, SEE SHEET 4-5 FOR DETAIL

SURCHARGE NOTES

1. REFER TO EMBANKMENT SURCHARGE TYPICAL SECTIONS ON SHEETS 4-5.
2. REFER TO DETAILS ON SHEET 6 FOR SETTLEMENT PLATE
3. INSTALL SETTLEMENT PLATES AT LOCATIONS NOTED.
4. COVER SURCHARGE MATERIAL WITH HYDROMULCH. PAID AS RAPID STABILIZATION.
5. SEE EMBANKMENT SURCHARGE SPECIAL PROVISION FOR REMOVAL AND DISPOSAL OF SURCHARGE MATERIAL.
6. COORDINATE ACCESS AND TEMPORARY CONSTRUCTION ROUTES OF CONSTRUCTION VEHICLES, EQUIPMENT, MATERIAL DELIVERIES, AND OTHER CONSTRUCTION TRAFFIC WITH DAKOTA COUNTY.
7. ACCESS FROM PRIVATE PROPERTIES IS PROHIBITED.

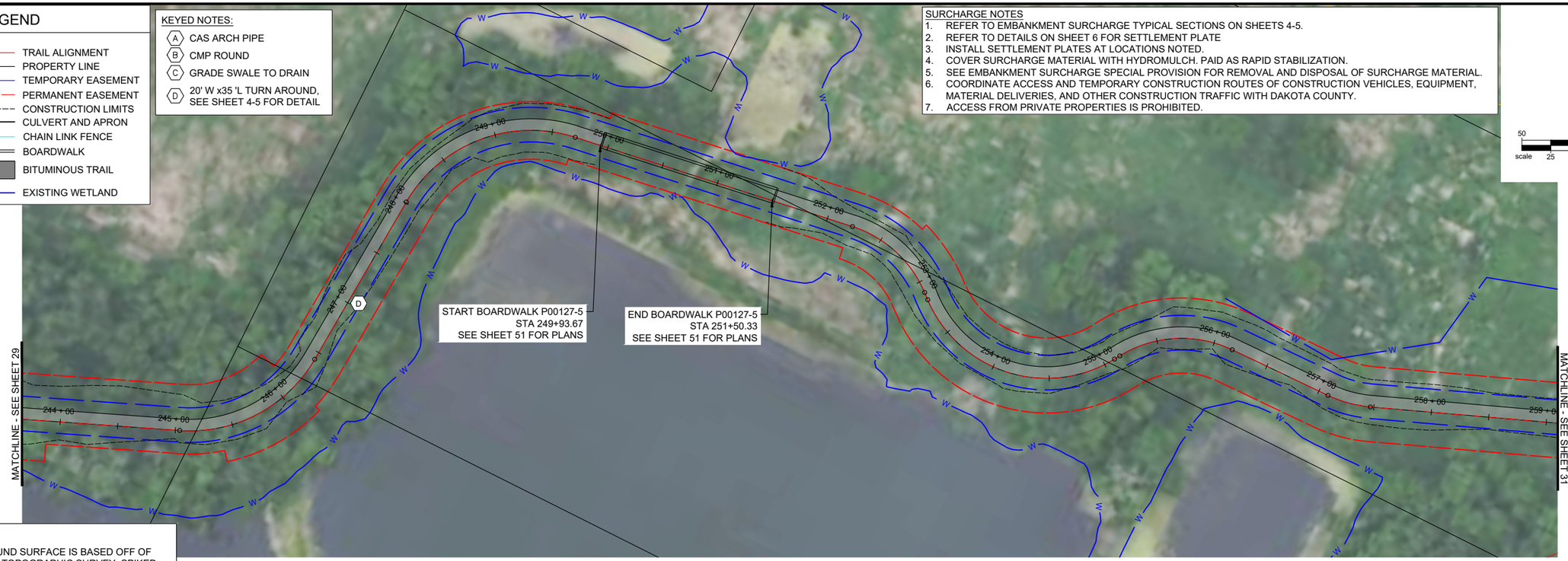

scale 50 0 50 100 feet

NOTE:

1. EXISTING GROUND SURFACE IS BASED OFF OF AERIAL DRONE TOPOGRAPHIC SURVEY. SPIKED ANOMALIES IN SURFACE WERE NOT ACCOUNTED FOR IN EARTHWORK QUANTITIES.

MINNESOTA RIVER GREENWAY - FORT SNELLING SEGMENT

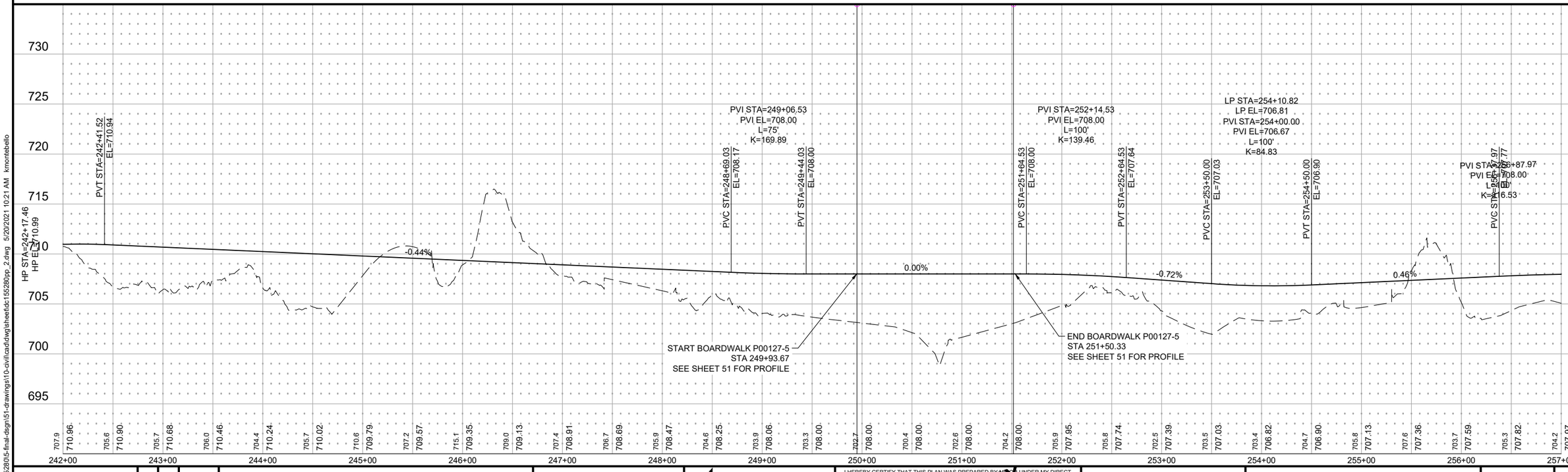

PRELIMINARY

DRAWN BY: KM
DESIGNER: KM
CHECKED BY: WB
DESIGN TEAM

NO.	BY	DATE	REVISIONS

Dakota County

SEH
PHONE: 952.912.2600
10901 RED CIRCLE DRIVE,
SUITE 300
MINNETONKA, MN 55343
www.sehinc.com

I HEREBY CERTIFY THAT THIS PLAN WAS PREPARED BY ME OR UNDER MY DIRECT SUPERVISION AND THAT I AM A DULY LICENSED PROFESSIONAL ENGINEER UNDER THE LAWS OF THE STATE OF MINNESOTA.

XXXXXXXXXX, PE

Date: XX/XX/2020 Lic. No. XXXXX

MINNESOTA RIVER GREENWAY - FORT SNELLING SEGMENT

CONSTRUCTION PLAN AND PROFILE

SP 019-090-024

FILE NO. 155280

30 / 119

x:\ae\d\dakot\t1552805-final-dsgn\51-drawings\10-civil\cad\dwg\sheet\dc155280pp_2.dwg 5/20/2021 10:21 AM kmontebello

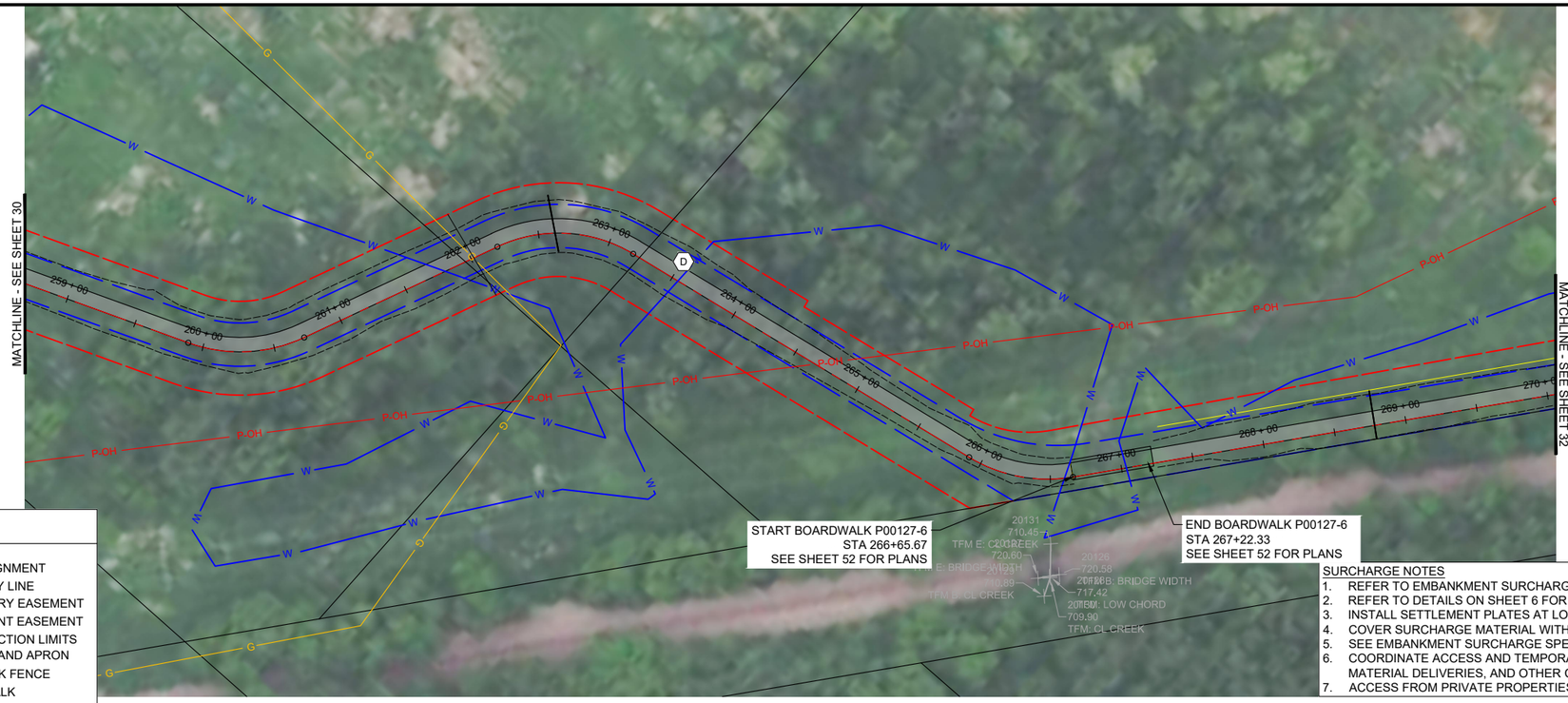

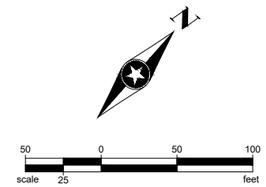

KEYED NOTES:

- (A) CAS ARCH PIPE
- (B) CMP ROUND
- (C) GRADE SWALE TO DRAIN
- (D) 20' W x35 'L TURN AROUND, SEE SHEET 4-5 FOR DETAIL

NOTE:

1. EXISTING GROUND SURFACE IS BASED OFF OF AERIAL DRONE TOPOGRAPHIC SURVEY. SPIKED ANOMALIES IN SURFACE WERE NOT ACCOUNTED FOR IN EARTHWORK QUANTITIES.

LEGEND

- 101+00
- TRAIL ALIGNMENT
- PROPERTY LINE
- TEMPORARY EASEMENT
- PERMANENT EASEMENT
- CONSTRUCTION LIMITS
- CULVERT AND APRON
- XC — CHAIN LINK FENCE
- BOARDWALK
- BITUMINOUS TRAIL
- W — EXISTING WETLAND

SURCHARGE NOTES

1. REFER TO EMBANKMENT SURCHARGE TYPICAL SECTIONS ON SHEETS 4-5.
2. REFER TO DETAILS ON SHEET 6 FOR SETTLEMENT PLATE
3. INSTALL SETTLEMENT PLATES AT LOCATIONS NOTED.
4. COVER SURCHARGE MATERIAL WITH HYDROMULCH. PAID AS RAPID STABILIZATION.
5. SEE EMBANKMENT SURCHARGE SPECIAL PROVISION FOR REMOVAL AND DISPOSAL OF SURCHARGE MATERIAL.
6. COORDINATE ACCESS AND TEMPORARY CONSTRUCTION ROUTES OF CONSTRUCTION VEHICLES, EQUIPMENT, MATERIAL DELIVERIES, AND OTHER CONSTRUCTION TRAFFIC WITH DAKOTA COUNTY.
7. ACCESS FROM PRIVATE PROPERTIES IS PROHIBITED.

MINNESOTA RIVER GREENWAY - FORT SNELLING SEGMENT

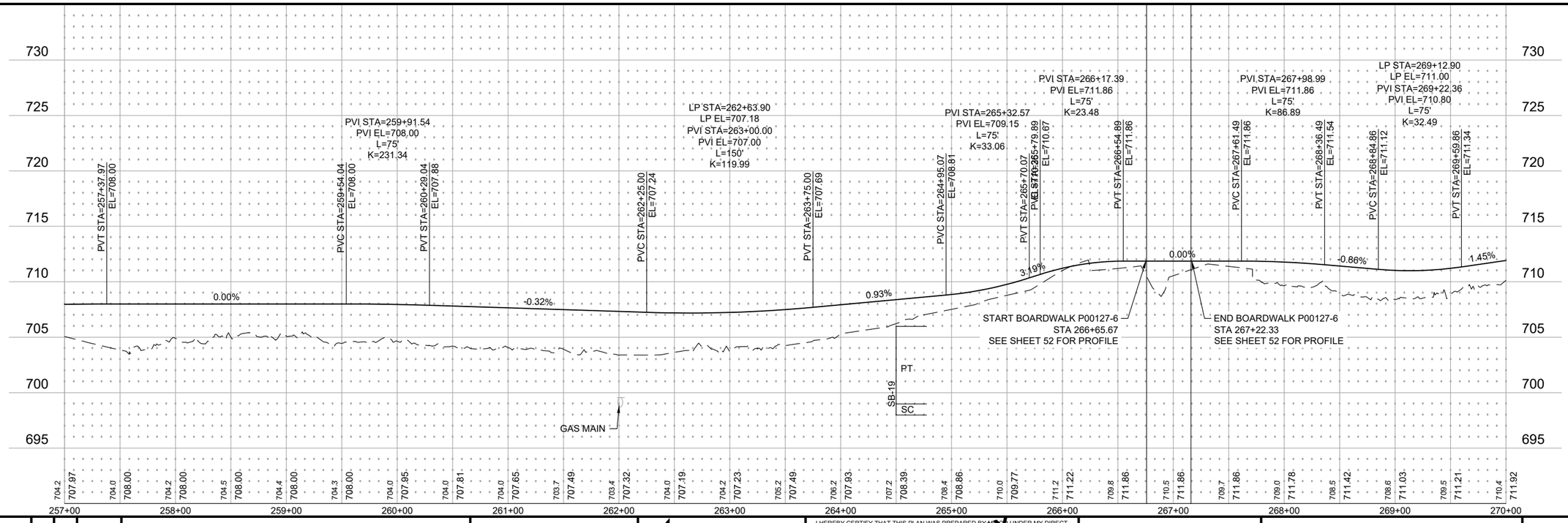

DRAWN BY: KM					
DESIGNER: KM					
CHECKED BY: WB					
DESIGN TEAM	NO.	BY	DATE	REVISIONS	

Dakota County

SEH
PHONE: 952.912.2600
10901 RED CIRCLE DRIVE, SUITE 300
MINNETONKA, MN 55343
www.sehinc.com

I HEREBY CERTIFY THAT THIS PLAN WAS PREPARED BY ME OR UNDER MY DIRECT SUPERVISION AND THAT I AM A DULY LICENSED PROFESSIONAL ENGINEER UNDER THE LAWS OF THE STATE OF MINNESOTA.

PRELIMINARY

XXXXXXXXXX, PE

Date: XX/XX/2020 Lic. No. XXXXX

MINNESOTA RIVER GREENWAY - FORT SNELLING SEGMENT

CONSTRUCTION PLAN AND PROFILE

SP 019-090-024

FILE NO. 155280

31 / 119

x:\ae\d\dakot\t1552805-final-dsgn\51-drawings\10-civil\cad\dwg\sheet\dc155280pp_2.dwg 5/20/2021 10:21 AM kmontebello

KEYED NOTES:

- (A) CAS ARCH PIPE
- (B) CMP ROUND
- (C) GRADE SWALE TO DRAIN
- (D) 20' W x35 'L TURN AROUND, SEE SHEET 4-5 FOR DETAIL

LEGEND

- 101+00
- TRAIL ALIGNMENT
- PROPERTY LINE
- TEMPORARY EASEMENT
- PERMANENT EASEMENT
- CONSTRUCTION LIMITS
- CULVERT AND APRON
- XC — CHAIN LINK FENCE
- BOARDWALK
- BITUMINOUS TRAIL
- W — EXISTING WETLAND

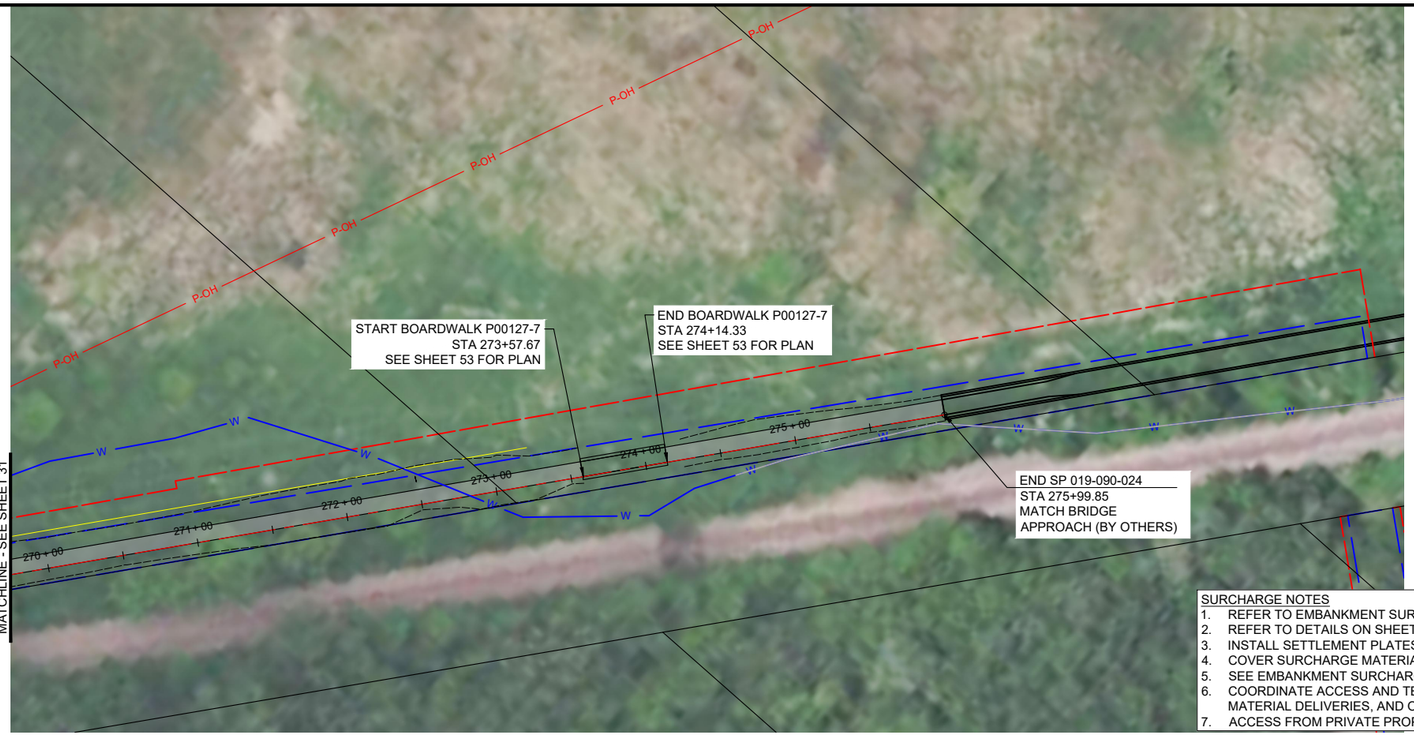

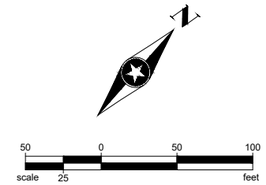

NOTE:

1. EXISTING GROUND SURFACE IS BASED OFF OF AERIAL DRONE TOPOGRAPHIC SURVEY. SPIKED ANOMALIES IN SURFACE WERE NOT ACCOUNTED FOR IN EARTHWORK QUANTITIES.

SURCHARGE NOTES

1. REFER TO EMBANKMENT SURCHARGE TYPICAL SECTIONS ON SHEETS 4-5.
2. REFER TO DETAILS ON SHEET 6 FOR SETTLEMENT PLATE
3. INSTALL SETTLEMENT PLATES AT LOCATIONS NOTED.
4. COVER SURCHARGE MATERIAL WITH HYDROMULCH. PAID AS RAPID STABILIZATION.
5. SEE EMBANKMENT SURCHARGE SPECIAL PROVISION FOR REMOVAL AND DISPOSAL OF SURCHARGE MATERIAL.
6. COORDINATE ACCESS AND TEMPORARY CONSTRUCTION ROUTES OF CONSTRUCTION VEHICLES, EQUIPMENT, MATERIAL DELIVERIES, AND OTHER CONSTRUCTION TRAFFIC WITH DAKOTA COUNTY.
7. ACCESS FROM PRIVATE PROPERTIES IS PROHIBITED.

MINNESOTA RIVER GREENWAY - FORT SNELLING SEGMENT

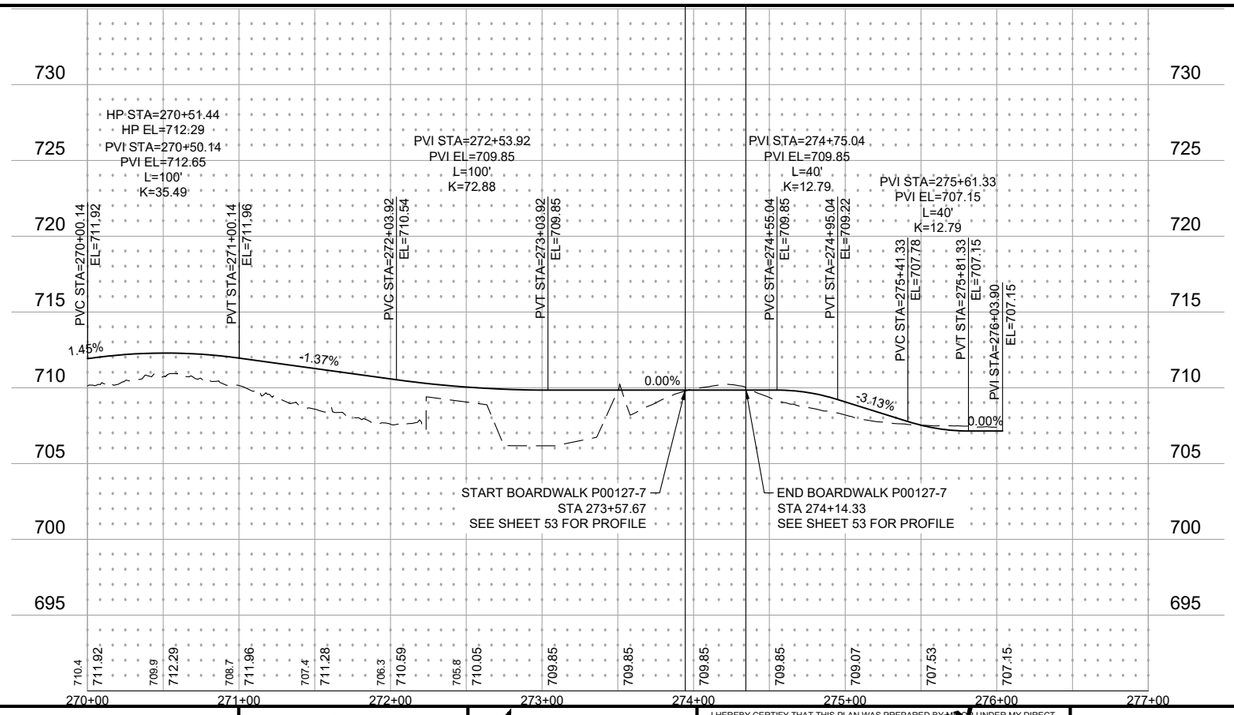

DRAWN BY:	KM
DESIGNER:	KM
CHECKED BY:	WB
DESIGN TEAM	

NO.	BY	DATE	REVISIONS

Dakota County

SEH
PHONE: 952.912.2600
10901 RED CIRCLE DRIVE,
SUITE 300
MINNETONKA, MN 55343
www.sehinc.com

I HEREBY CERTIFY THAT THIS PLAN WAS PREPARED BY ME OR UNDER MY DIRECT SUPERVISION AND THAT I AM A DULY LICENSED PROFESSIONAL ENGINEER UNDER THE LAWS OF THE STATE OF MINNESOTA.

PRELIMINARY

XXXXXXXXXX, PE

Date: XX/XX/2020 Lic. No. XXXXX

MINNESOTA RIVER GREENWAY - FORT SNELLING SEGMENT

CONSTRUCTION PLAN AND PROFILE

SP 019-090-024

FILE NO. 155280

32 / 119

x:\ae\d\dakot\t1552805-final-dsgn\51-drawings\10-civil\cad\dwg\sheet\dc155280pp_2.dwg 5/20/2021 10:21 AM kmontebello

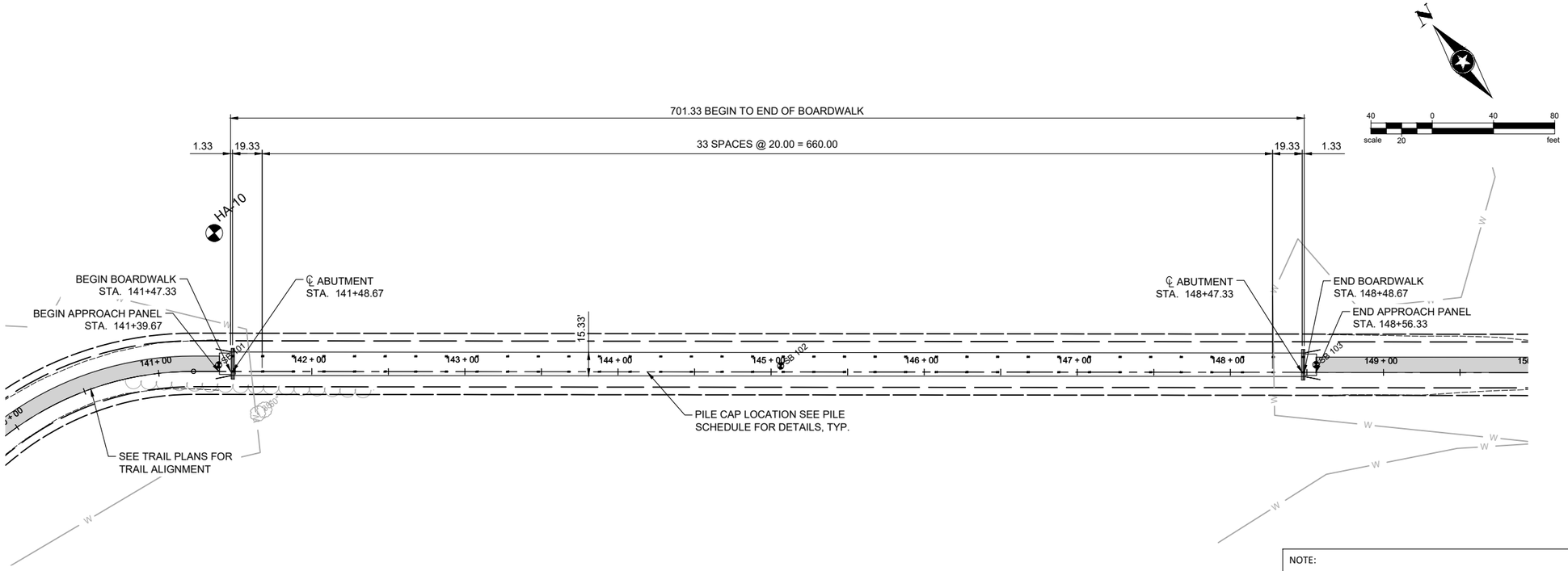

BOARDWALK P00127-1 PLAN & PROFILE

NOTE:

1. EXISTING GROUND SURFACE IS BASED OFF OF AERIAL DRONE TOPOGRAPHIC SURVEY. SPIKED ANOMALIES IN SURFACE WERE NOT ACCOUNTED FOR IN EARTHWORK QUANTITIES.

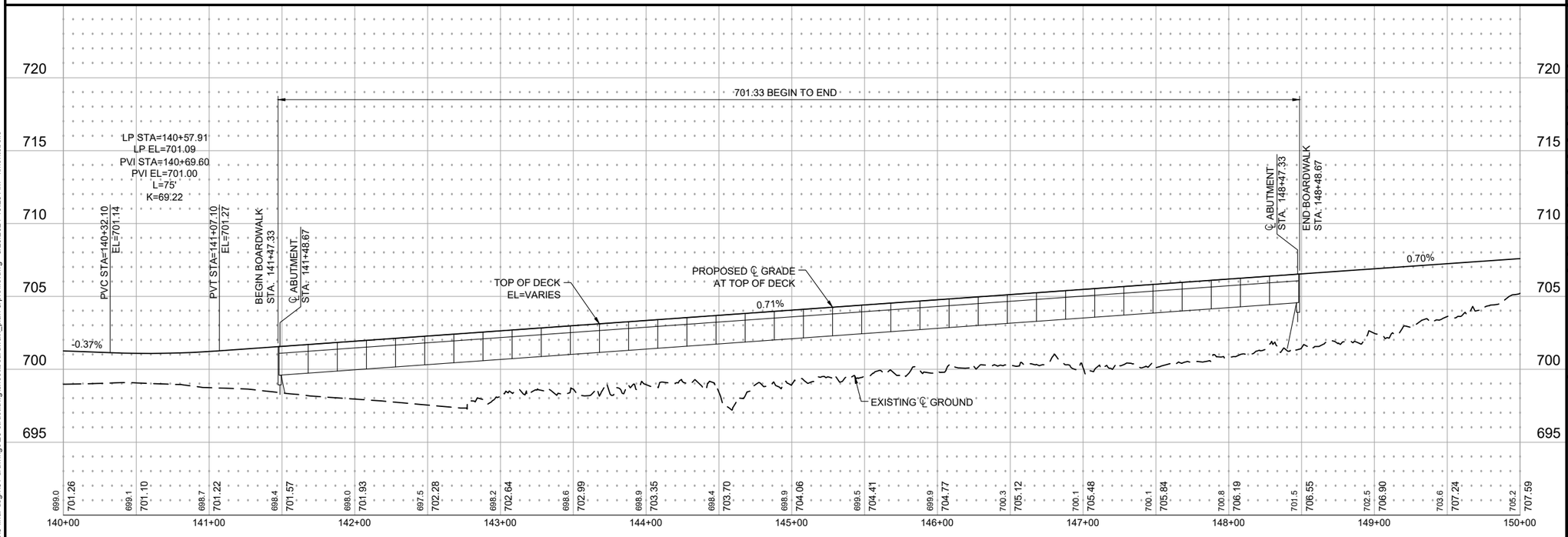

DESIGN DATA

2020 AND CURRENT INTERIM A.A.S.H.T.O. LRFD BRIDGE DESIGN SPECIFICATIONS AND 2009 LRFD GUIDE SPECIFICATIONS FOR THE DESIGN OF PEDESTRIAN BRIDGES.

LOAD AND RESISTANCE FACTOR DESIGN METHOD.

DESIGN LOADING: PEDESTRIAN LOADING 90 PSF OR VEHICLE LIVE LOAD HS-20 TRUCK.

DESIGN SPEED 20 MPH.

APPROXIMATE. DECK AREA:

BOARDWALK P00127-1	10,754 SQ. FT.
BOARDWALK P00127-2	327 SQ. FT.
BOARDWALK P00127-3	634 SQ. FT.
BOARDWALK P00127-4	4,621 SQ. FT.
BOARDWALK P00127-5	2,167 SQ. FT.
BOARDWALK P00127-6	634 SQ. FT.
BOARDWALK P00127-7	634 SQ. FT.

MATERIALS:

STRUCTURAL STEEL SHALL BE MNDOT 2402 AND 3309 CONFORMING TO ASTM A572, F53 OR A709 GRD 36 OR 50, HARDWARE AND STEEL TO BE HOT-DIP GALVANIZED AFTER FABRICATION IN ACCORDANCE WITH MNDOT 3394.

CONCRETE IN ACCORDANCE WITH MNDOT 2401 f'c=4000 psi MINIMUM REINFORCEMENT GRADE 60 (UNCOATED)

CONSTRUCTION NOTES

THE 2018 EDITION OF THE MINNESOTA DEPARTMENT OF TRANSPORTATION "STANDARD SPECIFICATIONS FOR CONSTRUCTION."

SHEET INDEX

47	BOARDWALK P00127-1 PLAN & PROFILE
48	BOARDWALK P00127-2 PLAN & PROFILE
49	BOARDWALK P00127-3 PLAN & PROFILE
50	BOARDWALK P00127-4 PLAN & PROFILE
51	BOARDWALK P00127-5 PLAN & PROFILE
52	BOARDWALK P00127-6 PLAN & PROFILE
53	BOARDWALK P00127-7 PLAN & PROFILE
54-55	BOARDWALK - LAYOUT & QUANTITIES 1
56	BOARDWALK - GENERAL DETAILS & SECTIONS
57	BOARDWALK - ABUTMENT & SUBSTRUCTURES
58	BOARDWALK - APPROACH & RAILING DETAILS

DATE: _____

APPROVED: _____ ENGINEER

95% PLAN - BRIDGE NO.
P00127-1 TO P00127-7

LOCATED IN EAGAN ALONG THE MINNESOTA RIVER, PREFAB. CONCRETE BEAMS, 20' SPANS, 15'-4" WIDE TRAIL, PEDESTRIAN RAILING, 0°00'00" SKEW
IDENTIFICATION NO. 801

GENERAL PLAN AND ELEVATION

SEC. 18 T 27 N R 23 W
CITY: EAGAN COUNTY: DAKOTA

DRAWN BY: RAD
DESIGNER: JAJ
CHECKED BY: JAJ
DESIGN TEAM

NO.	BY	DATE	REVISIONS

Dakota COUNTY

SEH
PHONE: 952.912.2600
10901 RED CIRCLE DRIVE,
SUITE 300
MINNETONKA, MN 55343
www.sehinc.com

I HEREBY CERTIFY THAT THIS PLAN WAS PREPARED BY ME OR UNDER MY DIRECT SUPERVISION AND THAT I AM A DULY LICENSED PROFESSIONAL ENGINEER UNDER THE LAWS OF THE STATE OF MINNESOTA.

PRELIMINARY

_____ XXXXXXXXXX, PE

Date: XX/XX/2020 Lic. No. XXXXX

MINNESOTA RIVER GREENWAY - FORT SNELLING SEGMENT

BOARDWALK P00127-1 PLAN & PROFILE

S.P. XXX-XXX-XXX

FILE NO. 155280

47 / 119

x:\aet\d\dakot\t1552805-final-dsgn\51-drawings\20-structdwg\sheet\boardwalk_plan & profile.dwg 5/20/2021 10:23 AM kmontebello

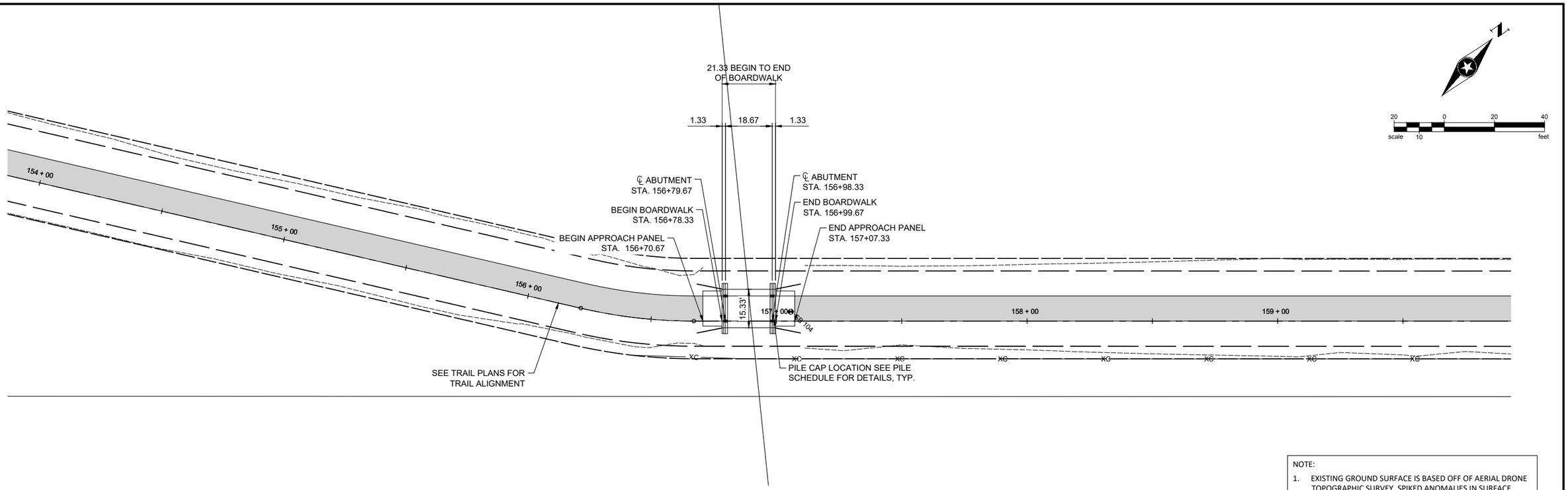

NOTE:

1. EXISTING GROUND SURFACE IS BASED OFF OF AERIAL DRONE TOPOGRAPHIC SURVEY. SPIKED ANOMALIES IN SURFACE WERE NOT ACCOUNTED FOR IN EARTHWORK QUANTITIES.

BOARDWALK P00127-2 PLAN & PROFILE

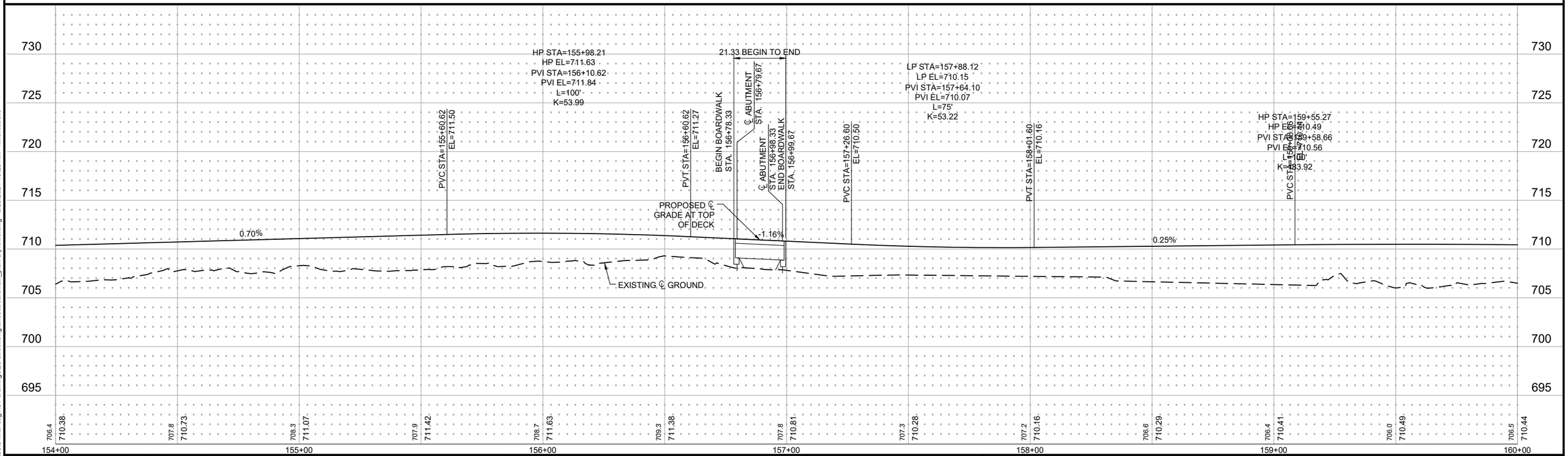

DRAWN BY: RAD					
DESIGNER: JAJ					
CHECKED BY: JAJ					
DESIGN TEAM	NO.	BY	DATE	REVISIONS	

Dakota COUNTY

SEH
PHONE: 952.912.2600
10901 RED CIRCLE DRIVE, SUITE 300
MINNETONKA, MN 55343
www.sehinc.com

I HEREBY CERTIFY THAT THIS PLAN WAS PREPARED BY ME OR UNDER MY DIRECT SUPERVISION AND THAT I AM A DULY LICENSED PROFESSIONAL ENGINEER UNDER THE LAWS OF THE STATE OF MINNESOTA.

PRELIMINARY

XXXXXXXXXXXX, PE

Date: XX/XX/2020 Lic. No. XXXXX

MINNESOTA RIVER GREENWAY - FORT SNELLING SEGMENT

BOARDWALK P00127-2 PLAN & PROFILE

S.P. XXX-XXX-XXX

FILE NO. 155280

x:\ae\d\dakot\155280\5-final-dsgn\51-drawings\20-struct\dwg\sheet\boardwalk_plan & profile.dwg 5/20/2021 10:23 AM kmontebello

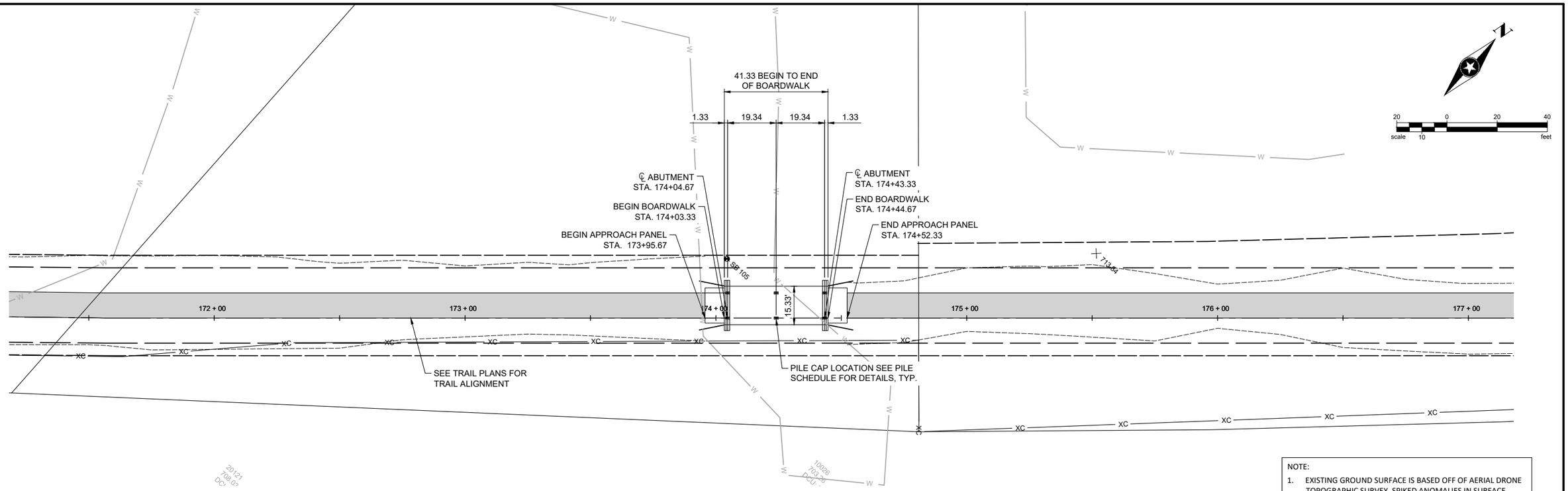

NOTE:
1. EXISTING GROUND SURFACE IS BASED OFF OF AERIAL DRONE TOPOGRAPHIC SURVEY. SPIKED ANOMALIES IN SURFACE WERE NOT ACCOUNTED FOR IN EARTHWORK QUANTITIES.

BOARDWALK P00127-3 PLAN & PROFILE

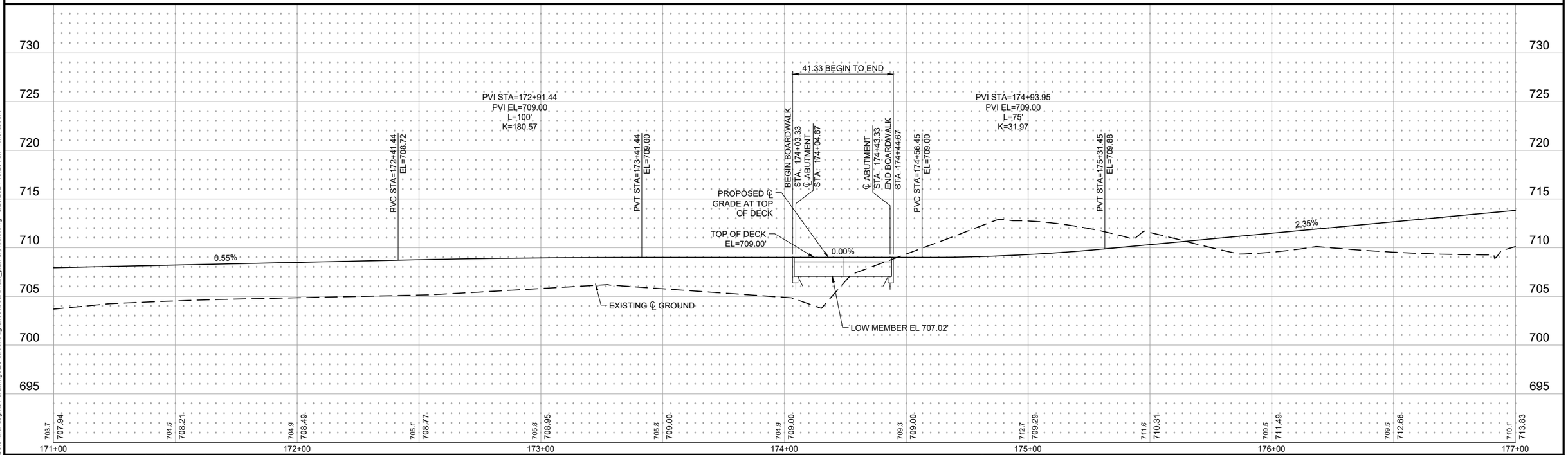

DRAWN BY: RAD					
DESIGNER: JAJ					
CHECKED BY: JAJ					
DESIGN TEAM	NO.	BY	DATE	REVISIONS	

Dakota COUNTY

SEH
PHONE: 952.912.2600
10901 RED CIRCLE DRIVE, SUITE 300
MINNETONKA, MN 55343
www.sehinc.com

I HEREBY CERTIFY THAT THIS PLAN WAS PREPARED BY ME OR UNDER MY DIRECT SUPERVISION AND THAT I AM A DULY LICENSED PROFESSIONAL ENGINEER UNDER THE LAWS OF THE STATE OF MINNESOTA.

PRELIMINARY

XXXXXXXXXXXX, PE

Date: XX/XX/2020 Lic. No. XXXXX

MINNESOTA RIVER GREENWAY - FORT SNELLING SEGMENT

BOARDWALK P00127-3 PLAN & PROFILE

S.P. XXX-XXX-XXX

FILE NO. 155280

x:\ae\d\dakot\155280\5-final-dsgn\51-drawings\20-struct\dwg\sheet\boardwalk_plan & profile.dwg 5/20/2021 10:23 AM kmontebello

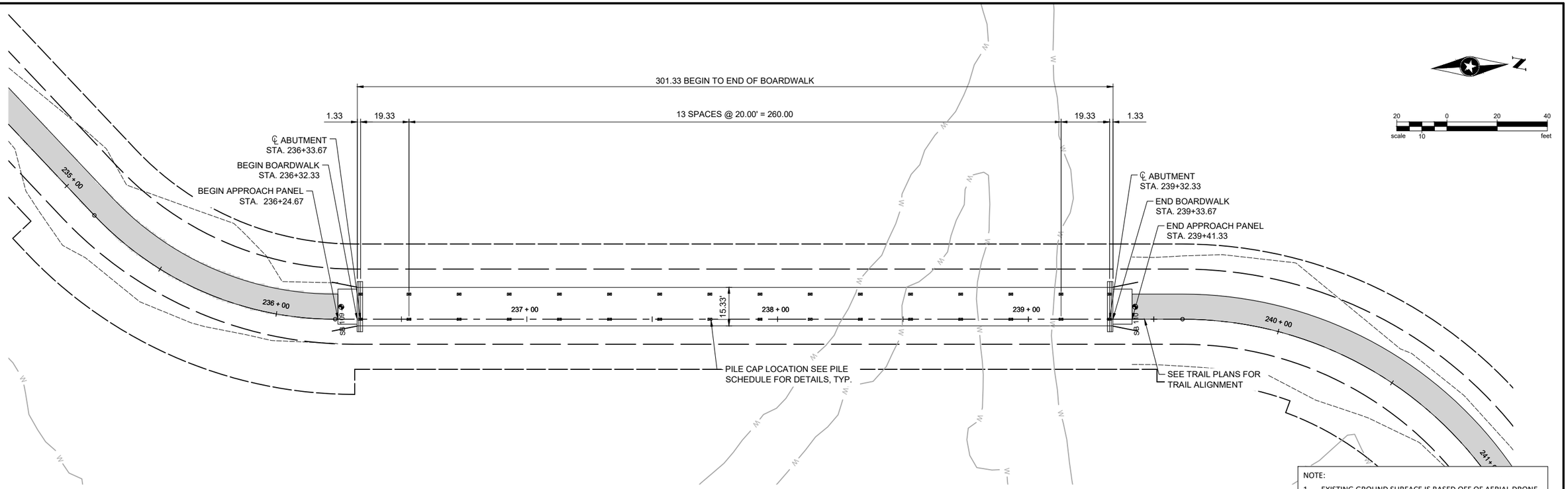

NOTE:
1. EXISTING GROUND SURFACE IS BASED OFF OF AERIAL DRONE TOPOGRAPHIC SURVEY. SPIKED ANOMALIES IN SURFACE WERE NOT ACCOUNTED FOR IN EARTHWORK QUANTITIES.

BOARDWALK P00127-4 PLAN & PROFILE

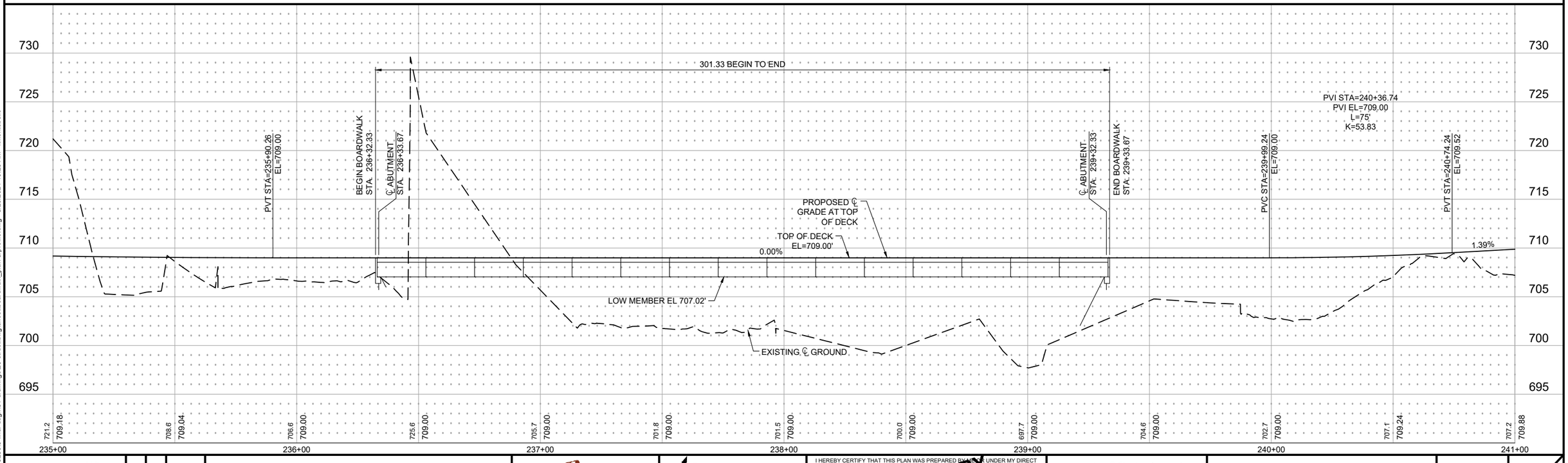

x:\aet\d\dakot\t1552805-final-dsgn\51-drawings\20-structdwg\sheet\boardwalk_plan & profile.dwg 5/20/2021 10:23 AM kmontebello

DRAWN BY: RAD					Dakota County	SEH PHONE: 952.912.2600 10901 RED CIRCLE DRIVE, SUITE 300 MINNETONKA, MN 55343 www.sehinc.com	I HEREBY CERTIFY THAT THIS PLAN WAS PREPARED BY ME OR UNDER MY DIRECT SUPERVISION AND THAT I AM A DULY LICENSED PROFESSIONAL ENGINEER UNDER THE LAWS OF THE STATE OF MINNESOTA. PRELIMINARY
DESIGNER: JAJ							
CHECKED BY: JAJ							
DESIGN TEAM	NO.	BY	DATE	REVISIONS			Name: XXXXXXXXXX, PE Date: XX/XX/2020 Lic. No. XXXXX

MINNESOTA RIVER GREENWAY - FORT SNELLING SEGMENT	BOARDWALK P00127-4 PLAN & PROFILE	S.P. XXX-XXX-XXX
		FILE NO. 155280
		50 / 119

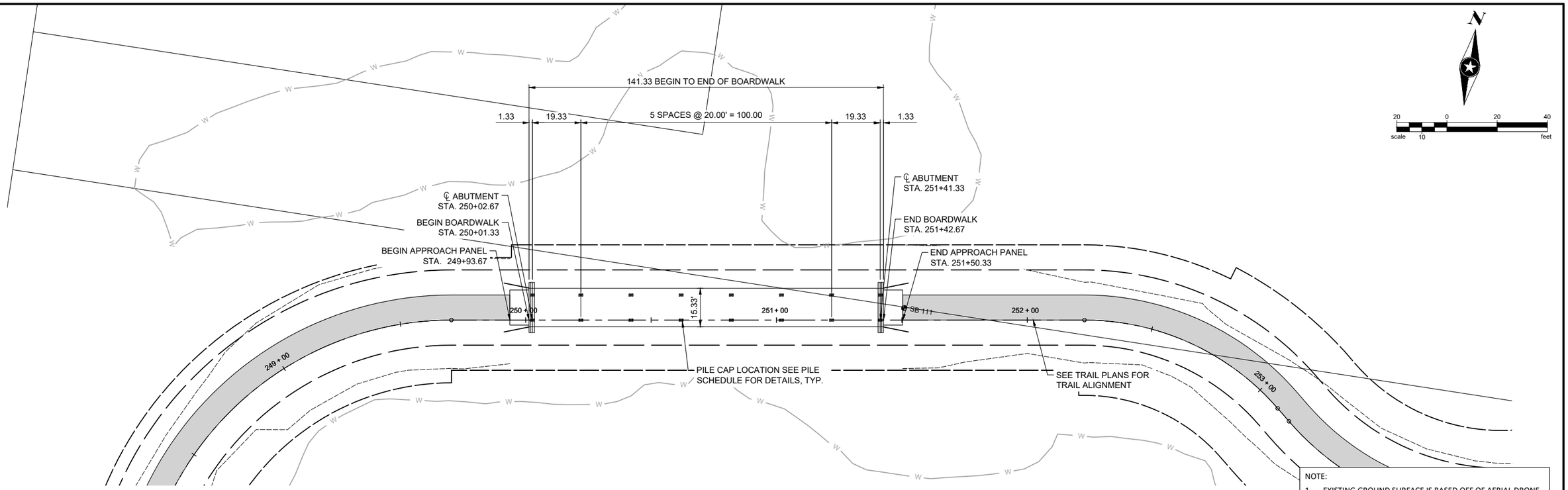

NOTE:

1. EXISTING GROUND SURFACE IS BASED OFF OF AERIAL DRONE TOPOGRAPHIC SURVEY. SPIKED ANOMALIES IN SURFACE WERE NOT ACCOUNTED FOR IN EARTHWORK QUANTITIES.

BOARDWALK P00127-5 PLAN & PROFILE

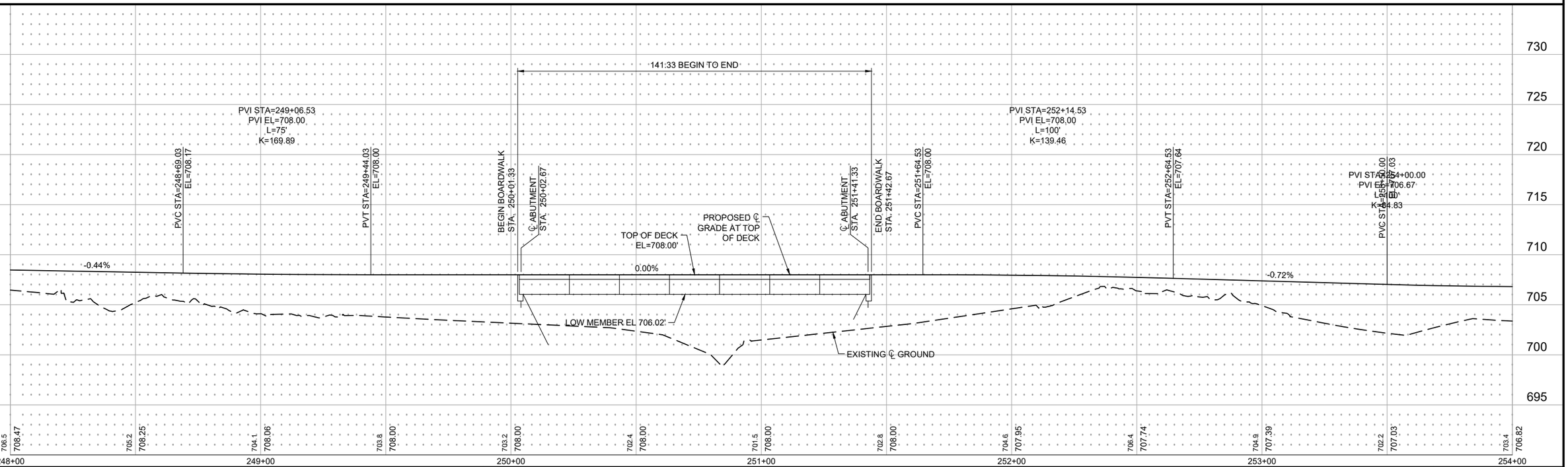

DRAWN BY: RAD					
DESIGNER: JAJ					
CHECKED BY: JAJ					
DESIGN TEAM	NO.	BY	DATE	REVISIONS	

Dakota COUNTY

SEH
PHONE: 952.912.2600
10901 RED CIRCLE DRIVE,
SUITE 300
MINNETONKA, MN 55343
www.sehinc.com

I HEREBY CERTIFY THAT THIS PLAN WAS PREPARED BY ME OR UNDER MY DIRECT SUPERVISION AND THAT I AM A DULY LICENSED PROFESSIONAL ENGINEER UNDER THE LAWS OF THE STATE OF MINNESOTA.

PRELIMINARY

XXXXXXXXXXXX, PE

Date: XX/XX/2020 Lic. No. XXXXX

MINNESOTA RIVER GREENWAY - FORT SNELLING SEGMENT

BOARDWALK P00127-5 PLAN & PROFILE

S.P. XXX-XXX-XXX

FILE NO. 155280

x:\ae\d\dakot\155280\5-final-dsgn\51-drawings\20-struct\dwg\sheet\boardwalk_plan & profile.dwg 5/20/2021 10:23 AM kmontebello

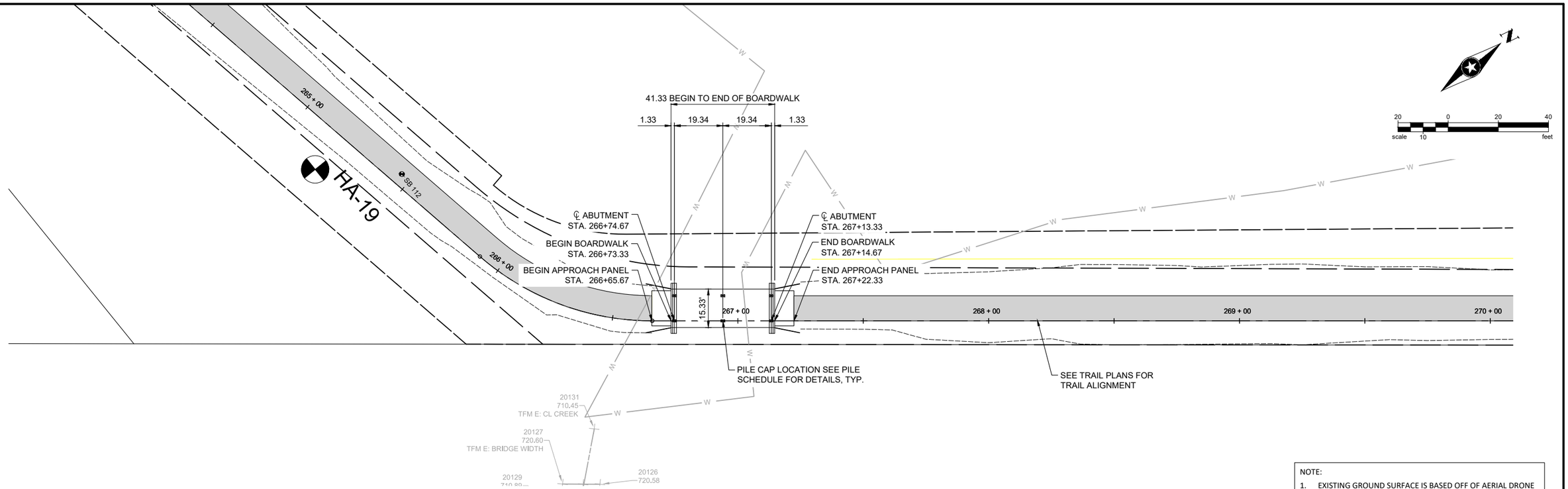

BOARDWALK P00127-6 PLAN & PROFILE

NOTE:

1. EXISTING GROUND SURFACE IS BASED OFF OF AERIAL DRONE TOPOGRAPHIC SURVEY. SPIKED ANOMALIES IN SURFACE WERE NOT ACCOUNTED FOR IN EARTHWORK QUANTITIES.

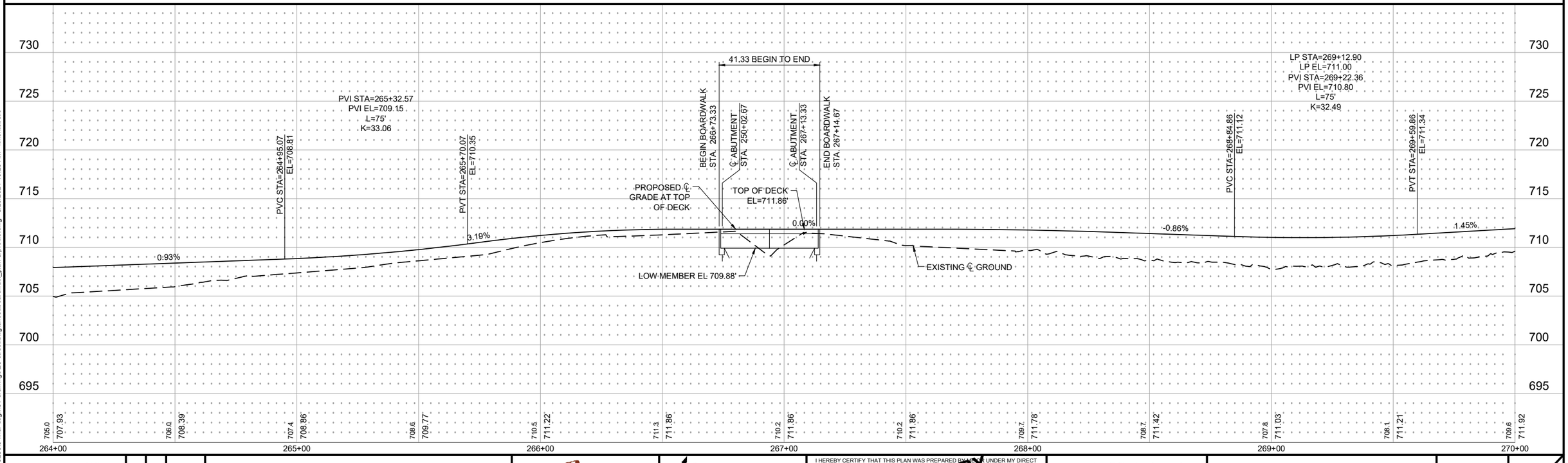

DRAWN BY: RAD					
DESIGNER: JAJ					
CHECKED BY: JAJ					
DESIGN TEAM	NO.	BY	DATE	REVISIONS	

Dakota County

SEH
PHONE: 952.912.2600
10901 RED CIRCLE DRIVE,
SUITE 300
MINNETONKA, MN 55343
www.sehinc.com

I HEREBY CERTIFY THAT THIS PLAN WAS PREPARED BY ME OR UNDER MY DIRECT SUPERVISION AND THAT I AM A DULY LICENSED PROFESSIONAL ENGINEER UNDER THE LAWS OF THE STATE OF MINNESOTA.

PRELIMINARY

Name: XXXXXXXXXX, PE
Date: XX/XX/2020 Lic. No. XXXXX

MINNESOTA RIVER GREENWAY - FORT SNELLING SEGMENT

BOARDWALK P00127-6 PLAN & PROFILE

S.P. XXX-XXX-XXX

FILE NO. 155280

52 / 119

x:\ael\d\dakot\11552805-final-dsgn\51-drawings\20-structdwg\sheet\boardwalk_plan & profile.dwg 5/20/2021 10:23 AM kmontebello

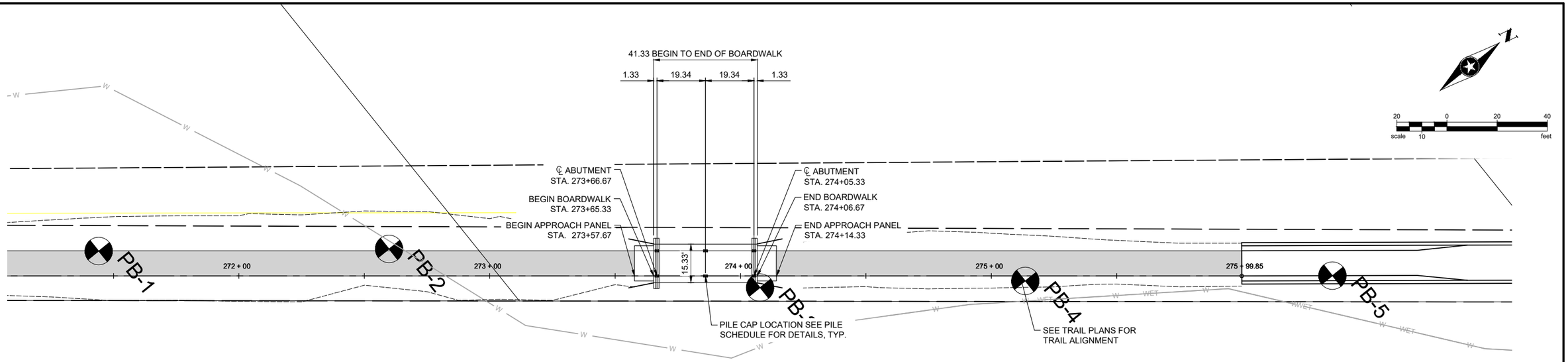

BOARDWALK P00127-7 PLAN & PROFILE

NOTE:

1. EXISTING GROUND SURFACE IS BASED OFF OF AERIAL DRONE TOPOGRAPHIC SURVEY. SPIKED ANOMALIES IN SURFACE WERE NOT ACCOUNTED FOR IN EARTHWORK QUANTITIES.

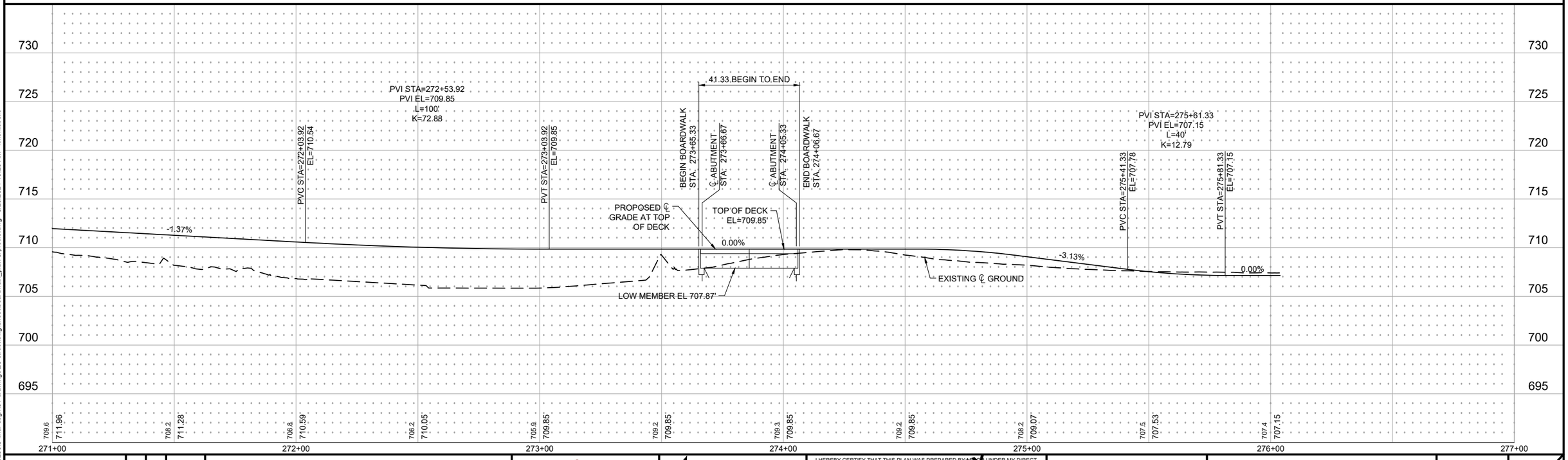

x:\ae\d\dakot\t1552805-final-dsgn\51-drawings\20-structdwg\sheet\boardwalk_plan & profile.dwg 5/20/2021 10:23 AM kmontebello

DRAWN BY: RAD					
DESIGNER: JAJ					
CHECKED BY: JAJ					
DESIGN TEAM	NO.	BY	DATE	REVISIONS	

Dakota County

SEH
PHONE: 952.912.2600
10901 RED CIRCLE DRIVE,
SUITE 300
MINNETONKA, MN 55343
www.sehinc.com

I HEREBY CERTIFY THAT THIS PLAN WAS PREPARED BY ME OR UNDER MY DIRECT SUPERVISION AND THAT I AM A DULY LICENSED PROFESSIONAL ENGINEER UNDER THE LAWS OF THE STATE OF MINNESOTA.

PRELIMINARY

XXXXXXXXXX, PE

Date: XX/XX/2020 Lic. No. XXXXX

MINNESOTA RIVER GREENWAY - FORT SNELLING SEGMENT

BOARDWALK P00127-7 PLAN & PROFILE

S.P. XXX-XXX-XXX

FILE NO. 155280

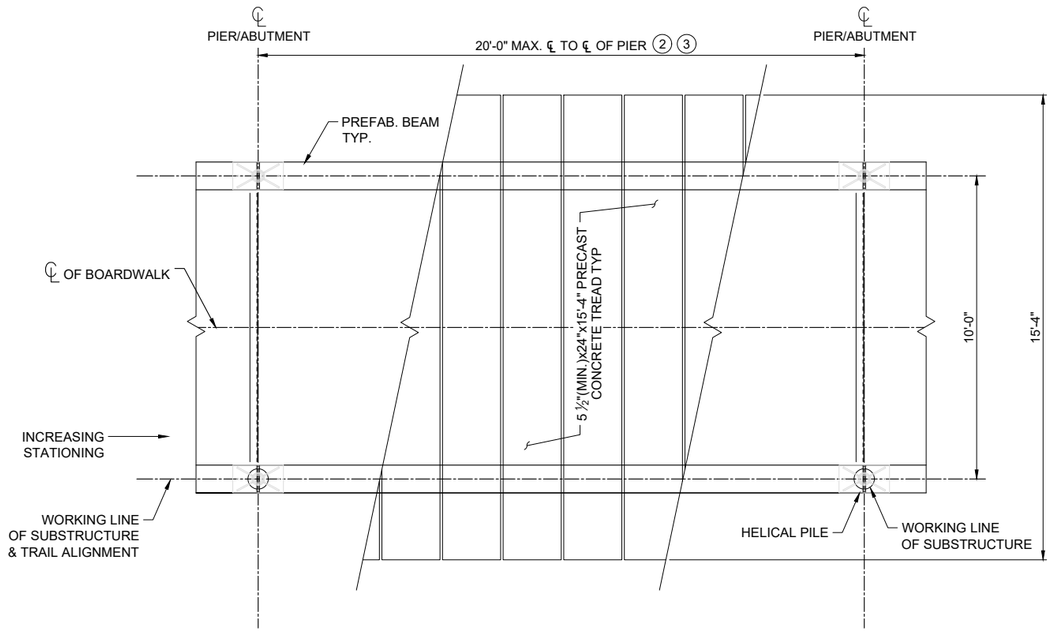

FRAMING PLAN

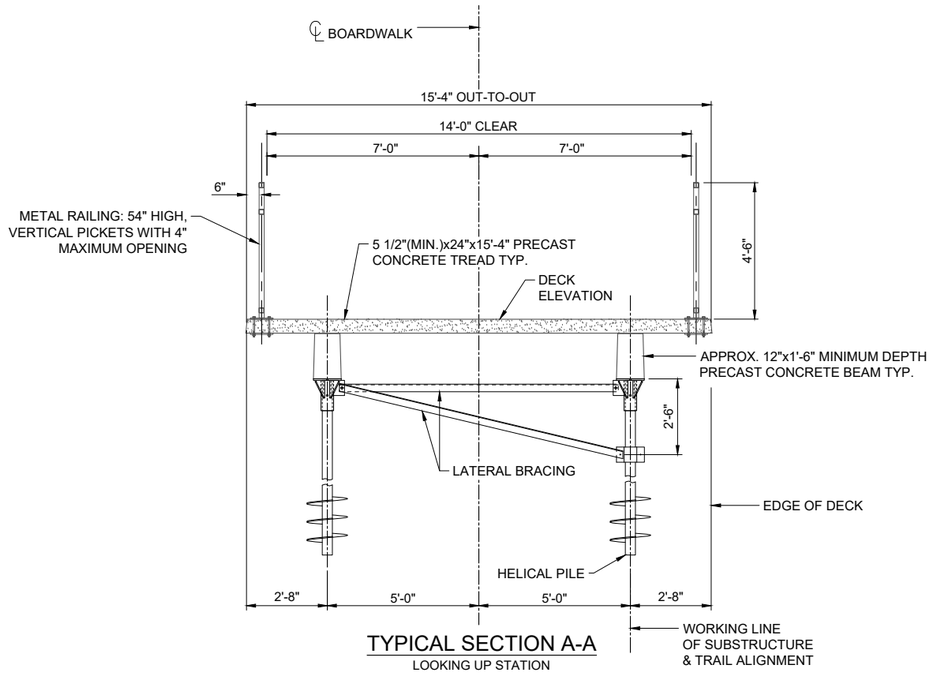

TYPICAL SECTION A-A
LOOKING UP STATION

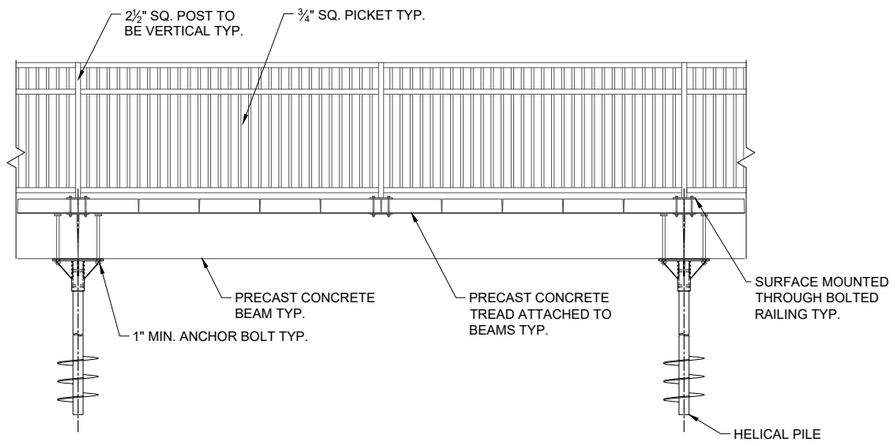

ELEVATION

NOTES:

1. WHEN BOARDWALK IS ON CURVED ALIGNMENT, STRINGERS & RAILING WILL BE CHORDS BETWEEN PIER SUBSTRUCTURE OR RAIL POSTS. LAYOUT DECK PLANK WITH NO EDGE GAP TO ½" MAX GAP ON CURVES. USE NO GAP TO ¼" GAP ON TANGENT ALIGNMENT. PLANK MAY NEED TO BE TAPER CUT TO MAINTAIN GAP.

(2) MEASURED ALONG ℄ OF TRAIL CHORD AS SHOWN.

(3) RAILING DIMENSIONS TO BE ADJUSTED AS NECESSARY DUE TO BRIDGE CURVES, AND TO AVOID DECK PANEL JOINTS.

DRAWN BY: RAD
DESIGNER: JAJ
CHECKED BY: JAJ
DESIGN TEAM

NO.	BY	DATE	REVISIONS

Dakota COUNTY

SEH
PHONE: 952.912.2600
10901 RED CIRCLE DRIVE, SUITE 300
MINNETONKA, MN 55343
www.sehinc.com

I HEREBY CERTIFY THAT THIS PLAN WAS PREPARED BY ME OR UNDER MY DIRECT SUPERVISION AND THAT I AM A DULY LICENSED PROFESSIONAL ENGINEER UNDER THE LAWS OF THE STATE OF MINNESOTA.

PRELIMINARY

Name: XXXXXXXXXXX, PE
Date: XX/XX/2020 Lic. No. XXXXX

MINNESOTA RIVER GREENWAY - FORT SNELLING SEGMENT

BOARDWALK - GENERAL DETAILS & SECTIONS

S.P. XXX-XXX-XXX
FILE NO. 155280

56 / 119

x:\aet\d\dakot\t1552805-final-dsgn\51-drawings\20-structdwg\sheet\boardwalk_details.dwg 5/20/2021 10:24 AM rdantzman

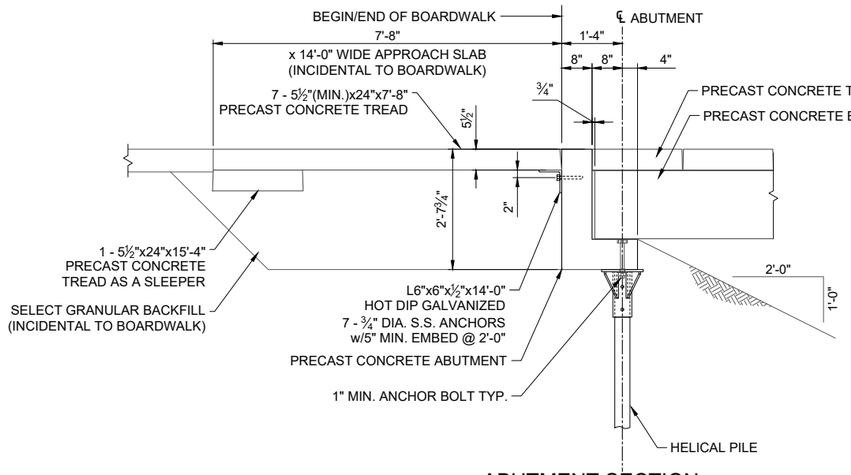

ABUTMENT SECTION

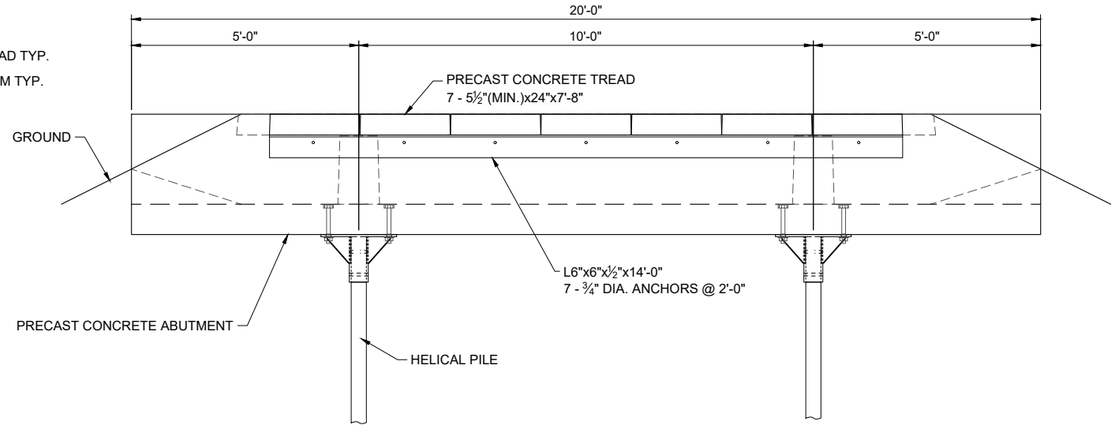

ABUTMENT ELEVATION

NOTE: BACKSIDE SHOWN

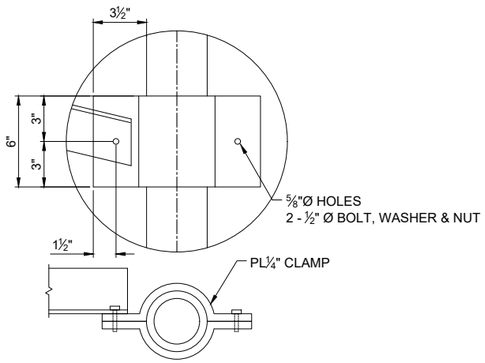

CLAMP CONNECTION DETAIL

NOTE: BRACED TO HELICAL PILE

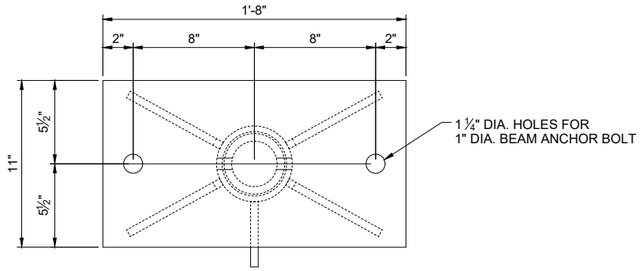

CAP PLATE DETAIL

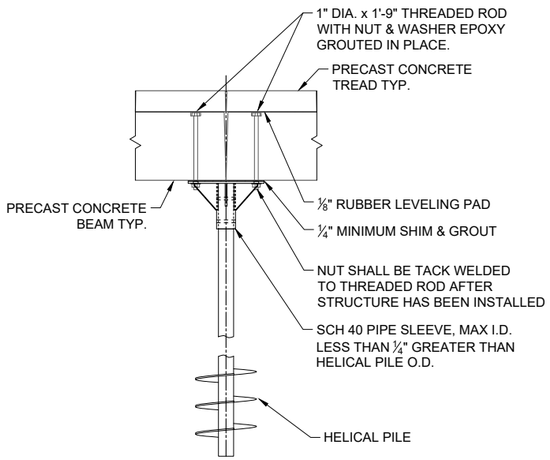

PIER DETAIL

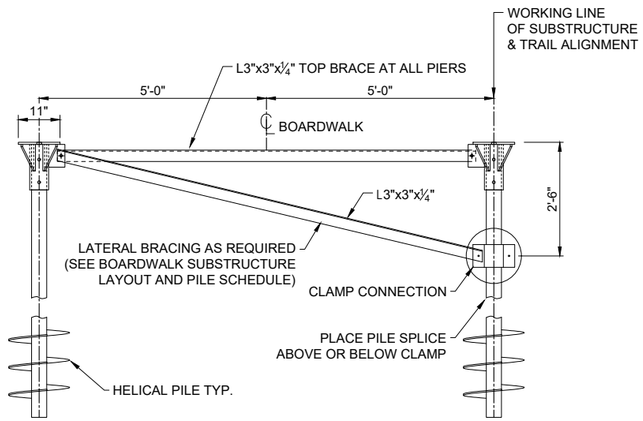

LATERAL BRACING DETAIL AT PIERS

NOTE: LOOKING UP STATION

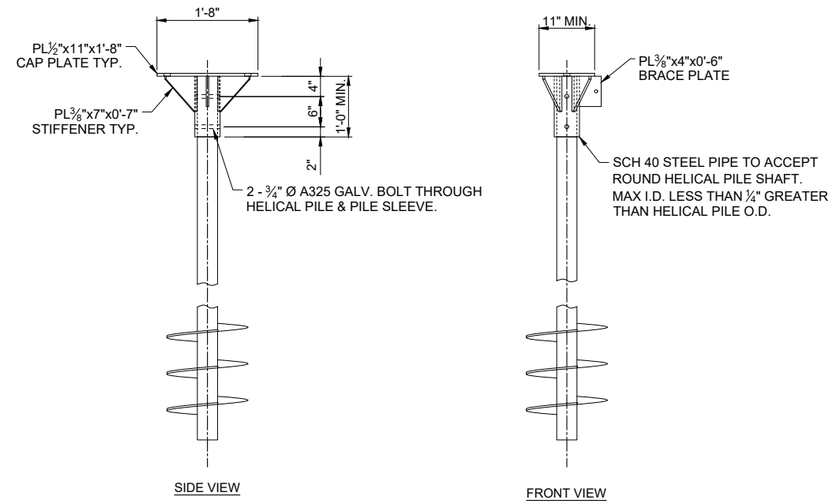

SUPPORT BRACKET DETAIL

NOTE: HOT DIPPED GALVANIZED PER ASTM A-153.

x:\aec\dakota\t1552805-final-dsgn\51-drawings\20-struct\dwg\sheet\boardwalk_details.dwg 5/20/2021 10:24 AM rdanitzman

DRAWN BY: RAD
DESIGNER: JAJ
CHECKED BY: JAJ
DESIGN TEAM

NO.	BY	DATE	REVISIONS

Dakota County

SEH
PHONE: 952.912.2600
10901 RED CIRCLE DRIVE,
SUITE 300
MINNETONKA, MN 55343
www.sehinc.com

I HEREBY CERTIFY THAT THIS PLAN WAS PREPARED BY ME OR UNDER MY DIRECT SUPERVISION AND THAT I AM A DULY LICENSED PROFESSIONAL ENGINEER UNDER THE LAWS OF THE STATE OF MINNESOTA.

PRELIMINARY

XXXXXXXXXX, PE
Date: XX/XX/2020 Lic. No. XXXXX

MINNESOTA RIVER GREENWAY - FORT SNELLING SEGMENT

BOARDWALK - ABUTMENT & SUBSTRUCTURES

S.P. XXX-XXX-XXX

FILE NO. 155280

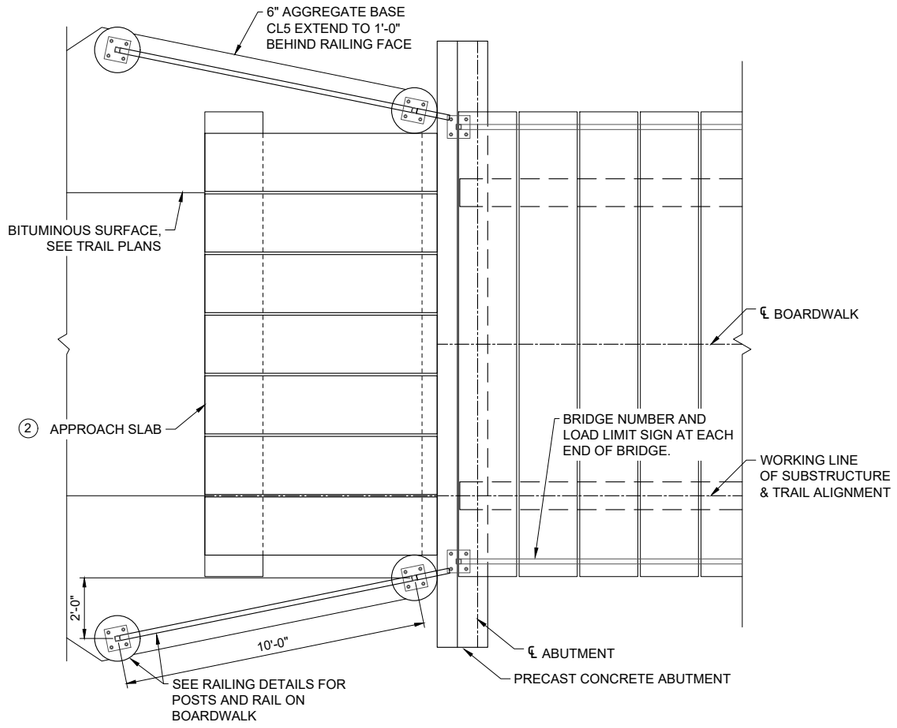

WINGWALL AND APPROACH RAILING PLAN

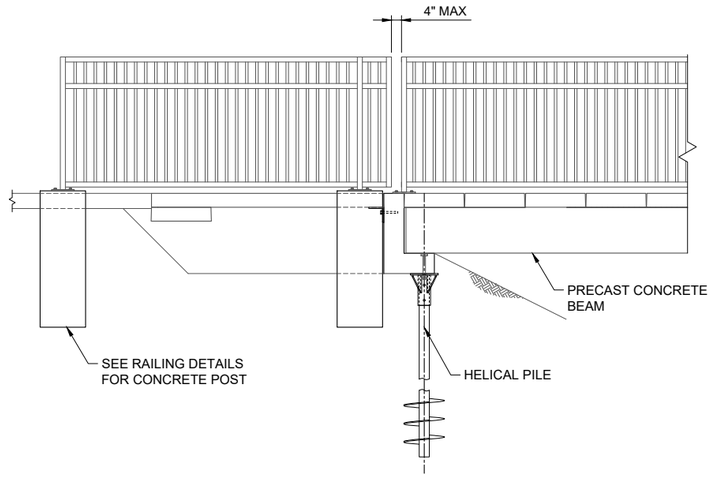

APPROACH RAILING ELEVATION

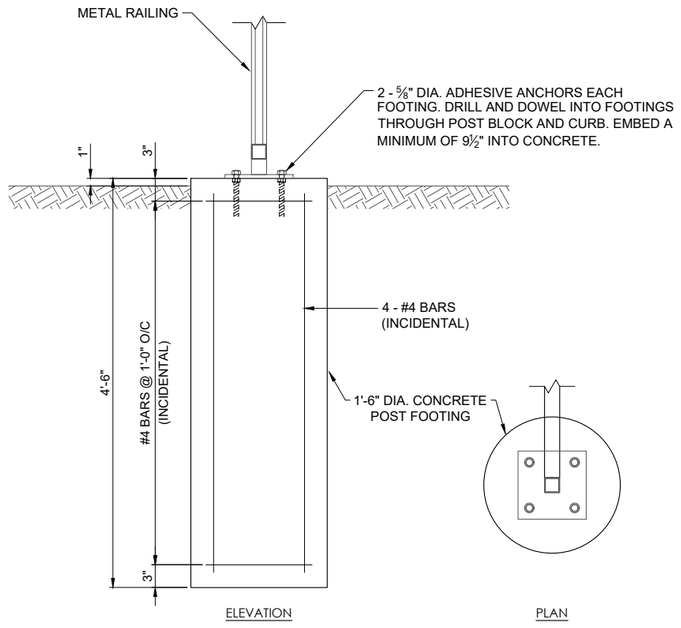

APPROACH RAIL POST FOOTING

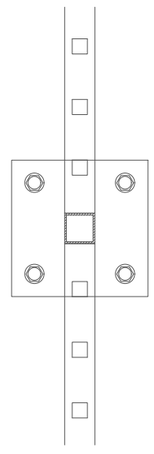

SECTION A-A

RAIL POST CONNECTION

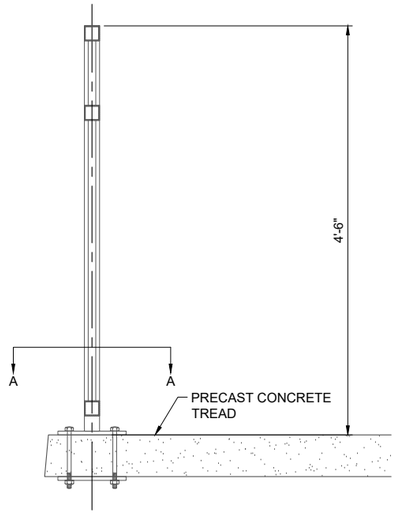

RAIL POST DETAIL

NOTES:

1. ALL GAPS BETWEEN BOARDWALK, AND BRIDGE RAILING SHALL BE LESS THAN 4".
2. APPROACH SLAB IS TANGENT TO ALIGNMENT.

DRAWN BY: RAD					
DESIGNER: JAJ					
CHECKED BY: JAJ					
DESIGN TEAM	NO.	BY	DATE	REVISIONS	

Dakota County

SEH
PHONE: 952.912.2600
10901 RED CIRCLE DRIVE,
SUITE 300
MINNETONKA, MN 55343
www.sehinc.com

I HEREBY CERTIFY THAT THIS PLAN WAS PREPARED BY ME OR UNDER MY DIRECT SUPERVISION AND THAT I AM A DULY LICENSED PROFESSIONAL ENGINEER UNDER THE LAWS OF THE STATE OF MINNESOTA.

PRELIMINARY

Name: XXXXXXXXXX, PE
Date: XX/XX/2020 Lic. No. XXXXX

MINNESOTA RIVER GREENWAY - FORT SNELLING SEGMENT

BOARDWALK - APPROACH & RAILING DETAILS

S.P. XXX-XXX-XXX

FILE NO. 155280

x:\aec\d\dakota\t\1552805-final-dsgn\51-drawings\20-structdwg\sheet\boardwalk_details.dwg 5/20/2021 10:24 AM rdantzman

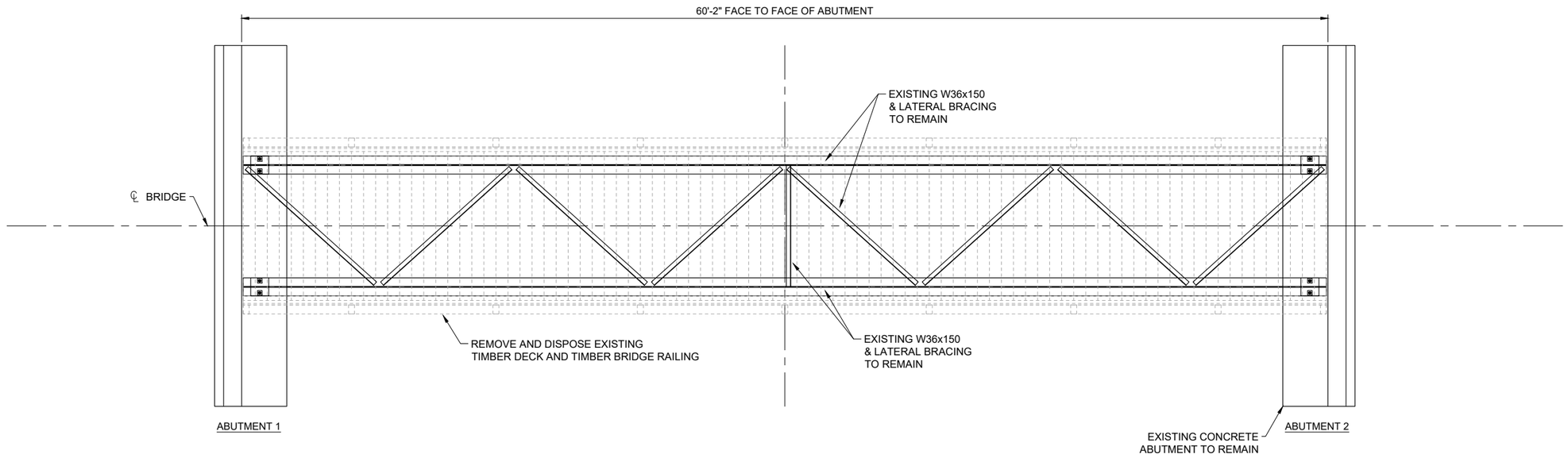

BR01600 - DEMOLITION PLAN & PROFILE

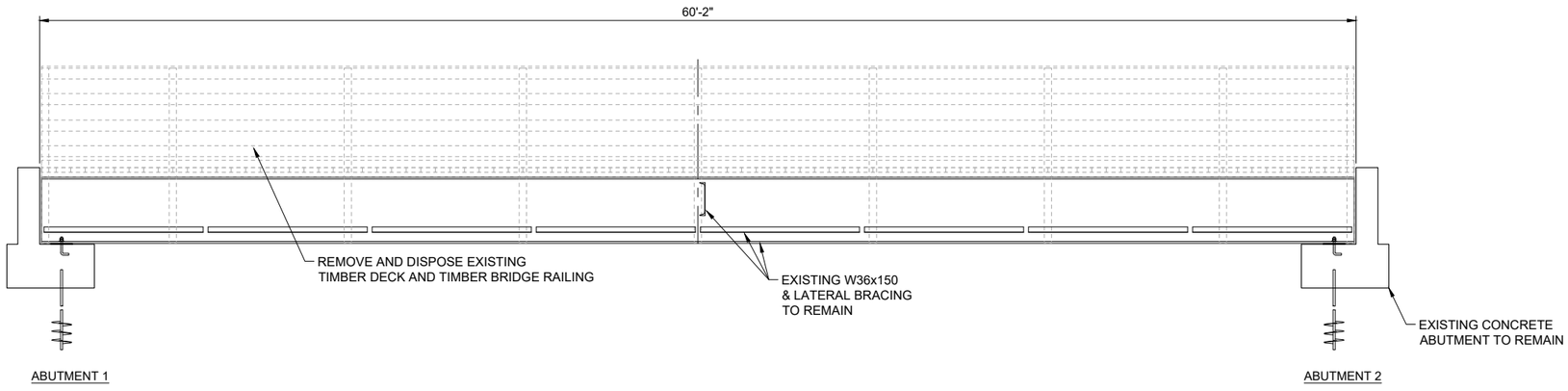

NOTES:
1. SEE SHEET 62 FOR TRANSVERSE SECTIONS AND DETAILS.
2. CLEAR AND GRUB:
   - 2.1. CLEAR AND GRUB ALL WOODY VEGETATION WITHIN 20' OF PROPOSED STRUCTURE AND LEGALLY DISPOSE OF OFF SITE.
   - 2.2. SALVAGE EXISTING TOPSOIL
3. FALL PROTECTION PLAN SHALL BE PROVIDED TO THE ENGINEER PRIOR TO DEMOLITION.
4. DEMOLITION:
   - 4.1. REMOVE ALL DESIGNATED TIMBER COMPONENTS INCLUDING ASSOCIATED HARDWARE AND LEGALLY DISPOSE OF OFF SITE.
5. RIGHT OF WAY:
   - 5.1. STATE OF MINNESOTA RIGHT OF WAY IS 50 FT EITHER SIDE OF THE CENTER LINE.
   - 5.2. CONSTRUCTION LIMITS SHALL BE CONTAINED WITHIN THE STATE RIGHT OF WAY.

SCHEDULE OF QUANTITIES - BR01600 RE-DECK			
ITEM NO	ITEM DESCRIPTION	UNIT	QUANTITY
2403.601	RE-DECK EXISTING BRIDGE	LUMP SUM	1

"RE-DECK EXISTING BRIDGE" NOTES
1. INCLUDES:
   - 1.1. REMOVAL OF EXISTING TIMBER DECK AND RAIL.
   - 1.2. INSTALLATION OF NEW TIMBER DECK WITH APPROACH SLABS
   - 1.3. AND ALL ITEMS SHOWN IN THESE DRAWINGS.
2. EXCLUDES:
   - 2.1. BITUMINOUS SURFACE

DESIGN DATA

2020 AND CURRENT INTERIM A.A.S.H.T.O. LRFD BRIDGE DESIGN SPECIFICATIONS AND 2009 LRFD GUIDE SPECIFICATIONS FOR THE DESIGN OF PEDESTRIAN BRIDGES.

LOAD AND RESISTANCE FACTOR DESIGN METHOD.

DESIGN LOADING: THE GREATER OF A UNIFORM LIVE LOAD OF 90 PSF APPLIED TO THE ENTIRE DECK SURFACE; OR AN HS-20 VEHICLE.

DESIGN SPEED 20 MPH.

APPROX. DECK AREA:
RE-DECK 720 SQ. FT.

MATERIALS:
STRUCTURAL STEEL SHALL BE MNDOT 2402 AND 3309 CONFORMING TO ASTM A572, F53 OR A709 GRD 36 OR 50, HARDWARE AND STEEL TO BE HOT-DIP GALVANIZED AFTER FABRICATION IN ACCORDANCE WITH MNDOT 3394.

CONCRETE IN ACCORDANCE WITH MNDOT 2401 f'c=4000 psi MINIMUM REINFORCEMENT GRADE 60 (UNCOATED)

TIMBER MATERIAL INSTALLED SHALL COMPLY WITH OR EXCEED THE FOLLOWING SCHEDULE:

ITEM	DESCRIPTION
DECK PANELS	DOUGLAS FIR, NO. 1 OR BETTER, ROUGH S1S2E Fb=1,150 PSI ACQ OR MCA WITH RETENTION FOR USE CATEGORY - UC3 (EXTERIOR ABOVE GROUND)
RAIL POST & RAILS	SOUTHERN YELLOW PINE NO. 2 OR BETTER, S4S Fb=850 PSI TREATMENT SAME AS ABOVE
RAIL POST SPACER BLOCK	SOUTHERN YELLOW PINE NO. 2 OR BETTER, ROUGH SAWN TREATMENT SAME AS ABOVE
TOP RAIL CAP	SOLID COMPOSITE (IE TREX) OR TROPICAL HARDWOOD (IE IPE OR CUMARU)

CONSTRUCTION NOTES

THE 2018 EDITION OF THE MINNESOTA DEPARTMENT OF TRANSPORTATION "STANDARD SPECIFICATIONS FOR CONSTRUCTION."

SHEET INDEX

59	BR01600 - DEMOLITION PLAN & PROFILE
60	BR01600 - PROPOSED PLAN & PROFILE
61	BR01600 - SUBSTRUCTURE MODIFICATIONS
62	BR01600 - TRANSVERSE SECTIONS & DETAILS
63	BR01600 - RAILING & MISCELLANOUS DETAILS
64	BR01600 - APPROACH PANEL DETAILS
65	BR01600 - PAVING DETAILS

_____ DATE: _____
APPROVED: _____ ENGINEER

95% PLAN
BRIDGE NO. 01600

LOCATED IN EAGAN ALONG THE MINNESOTA RIVER, TRAIL BRIDGE STEEL BEAMS, 60' SPAN, 12'-0" WIDE TIMBER PANELS, PEDESTRIAN RAILING, 0°00'00" SKEW IDENTIFICATION NO. 401

GENERAL PLAN AND ELEVATION

SEC. 18 T 27 N R 23 W
CITY: EAGAN COUNTY: DAKOTA

DRAWN BY: RAD
DESIGNER: JAJ
CHECKED BY: JAJ
DESIGN TEAM

NO.	BY	DATE	REVISIONS

Dakota COUNTY

SEH
PHONE: 952.912.2600
10901 RED CIRCLE DRIVE,
SUITE 300
MINNETONKA, MN 55343
www.sehinc.com

I HEREBY CERTIFY THAT THIS PLAN WAS PREPARED BY ME OR UNDER MY DIRECT SUPERVISION AND THAT I AM A DULY LICENSED PROFESSIONAL ENGINEER UNDER THE LAWS OF THE STATE OF MINNESOTA.

PRELIMINARY

_____ XXXXXXXXXXXX, PE
Date: XX/XX/2020 Lic. No. XXXXX

MINNESOTA RIVER GREENWAY - FORT SNELLING SEGMENT

BR01600 - DEMOLITION PLAN & PROFILE

S.P. XXX-XXX-XXX

FILE NO. 155280

59 / 119

x:\ae\d\dakot\t1552805-final-dsgn\51-drawings\20-structdwg\sheet\br01600_demolition.dwg 5/20/2021 10:24 AM rdantzman

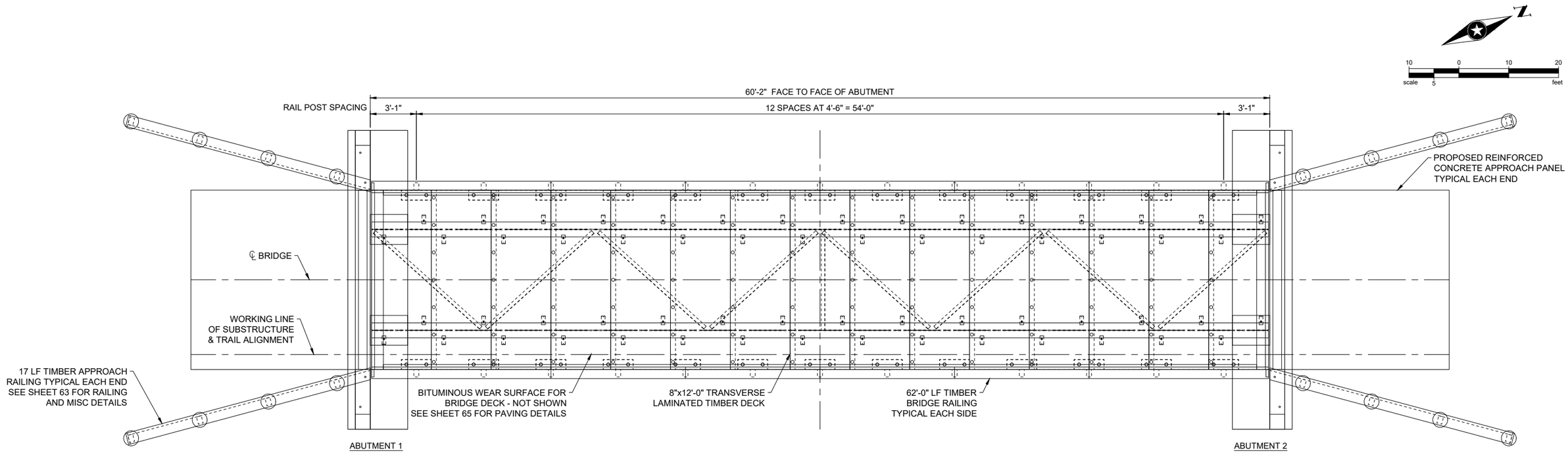

BR01600 - PROPOSED PLAN & PROFILE

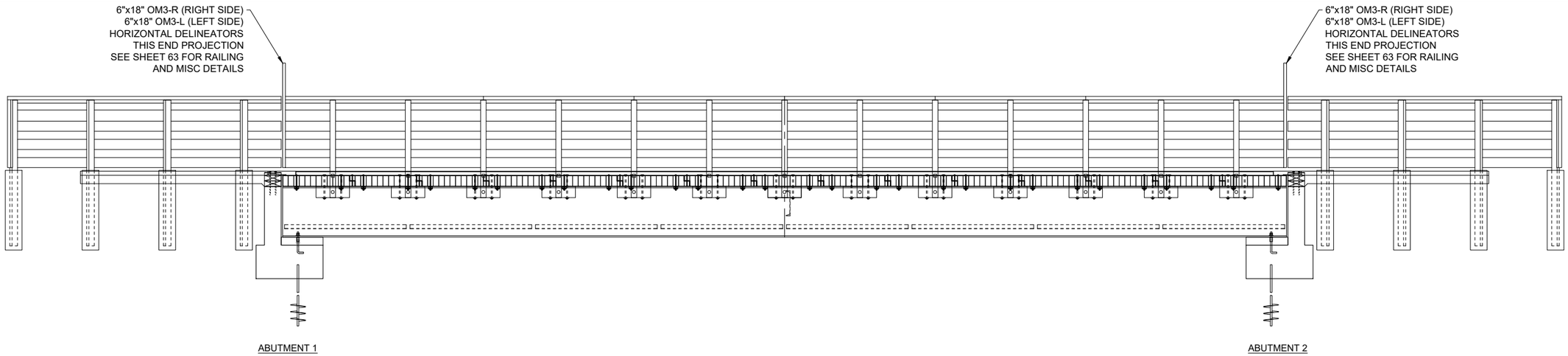

NOTES:
1. SEE SHEET 62 FOR BR01600 - TRANSVERSE SECTIONS & DETAILS.
2. BITUMINOUS WEAR SURFACE FOR TRAIL SHAAL BE 2 ½" THICK MINIMUM.
3. SEE SHEET 61 FOR BR01600 - SUBSTRUCTURE MODIFICATIONS.

DRAWN BY: RAD
DESIGNER: JAJ
CHECKED BY: JAJ
DESIGN TEAM

NO.	BY	DATE	REVISIONS

Dakota COUNTY

SEH
PHONE: 952.912.2600
10901 RED CIRCLE DRIVE, SUITE 300
MINNETONKA, MN 55343
www.sehinc.com

I HEREBY CERTIFY THAT THIS PLAN WAS PREPARED BY ME OR UNDER MY DIRECT SUPERVISION AND THAT I AM A DULY LICENSED PROFESSIONAL ENGINEER UNDER THE LAWS OF THE STATE OF MINNESOTA.

PRELIMINARY

XXXXXXXXXXX, PE
Date: XX/XX/2020 Lic. No. XXXXX

MINNESOTA RIVER GREENWAY - FORT SNELLING SEGMENT

BR01600 - PROPOSED PLAN & PROFILE

S.P. XXX-XXX-XXX
FILE NO. 155280

x:\ael\d\dakot\t1552805-final-dsgn\51-drawings\20-structdwg\sheet\br01600_proposed.dwg 5/20/2021 10:24 AM rdantzman

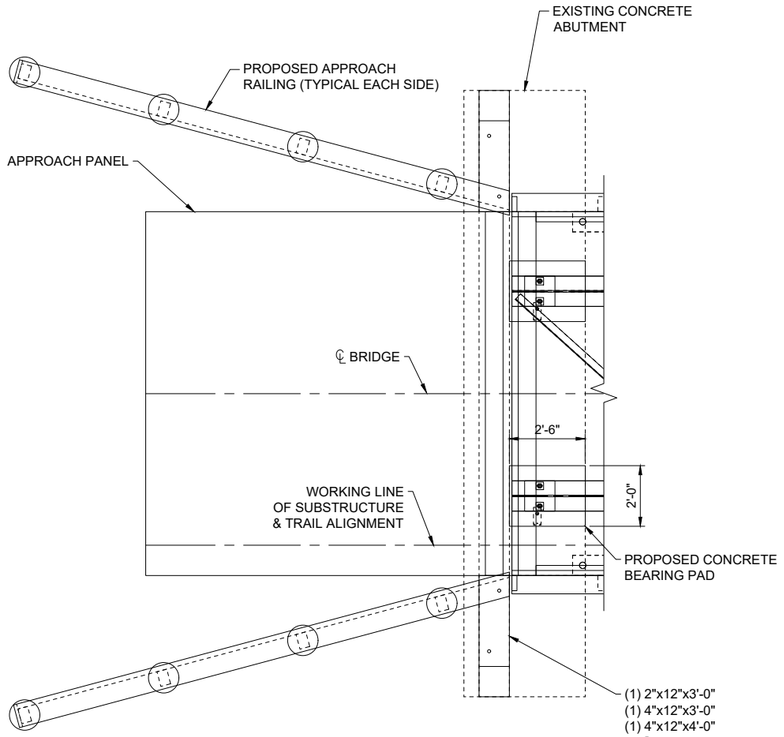

ABUTMENT 1 - PLAN VIEW

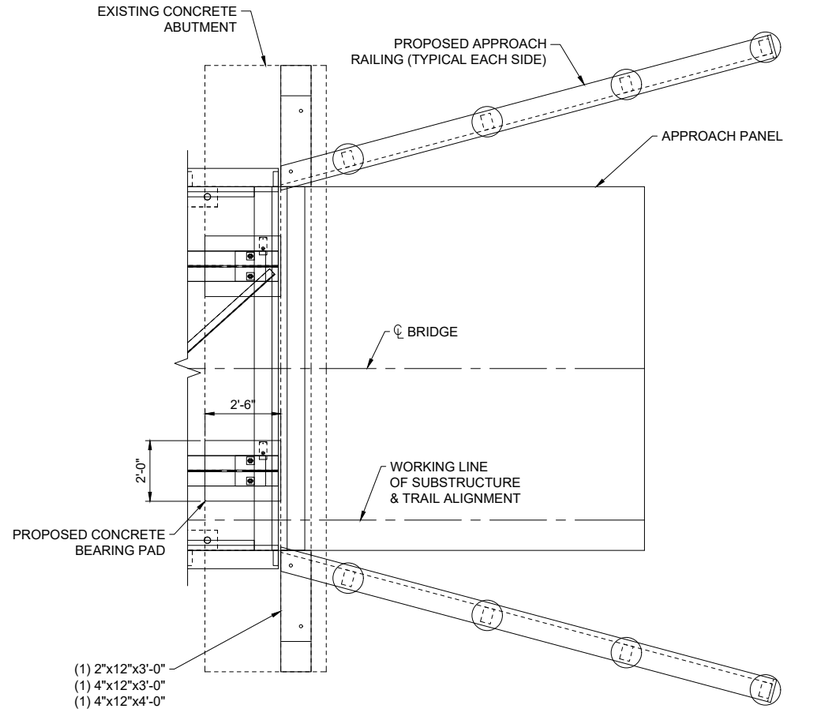

ABUTMENT 2 - PLAN VIEW

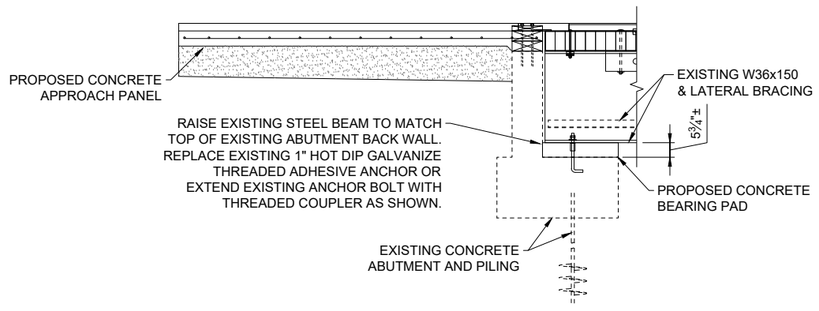

ABUTMENT 1 - ELEVATION VIEW

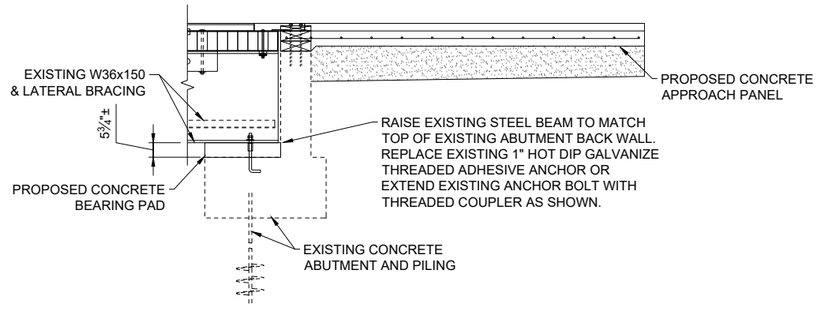

ABUTMENT 2 - ELEVATION VIEW

NOTES:

1. TIMBER SUBSTRUCTURE MODIFICATIONS.
   - 1.1. ALL SAWCUTS, HOLES, AND ABRASIONS SHALL BE FIELD TREATED WITH TWO APPLICATIONS OF THE PRESERVATIVE TREATMENT USED TO TREAT THE TIMBER.
   - 1.2. ALL HOLES GREATER THAN ½" IN ANY DIRECTION SHALL BE FILLED WITH BITUMINOUS MASTIC MEETING MNDOT SPEC. 3723 OR 3728.
   - 1.3. ALL HOLES FOR BOLTS, TIMBER DRIVE SPIKES, AND DRIFT PINS SHALL BE PREDRILLED TO PROPER DIAMETER AND FIELD TREATED WITH TWO APPLICATIONS OF A 2% SOLUTION OF COPPER NAPHTHENATE.
   - 1.4. UPSET ALL BOLTS AFTER FINAL TIGHTENING.
   - 1.5. TYPE III GEOTEXTILE FABRIC PER MNDOT SPEC 3733 SHALL BE INSTALLED ON THE BACKWALLS OF THE ABUTMENTS AND WINGWALLS BEFORE BACKFILLING.
   - 1.6. BACKFILL BEHIND ABUTMENT AND UNDER R/C APPROACH PANEL WITH SELECT GRANULAR BORROW COMPACTED TO 100% OF STANDARD PROCTOR DENSITY (APPROXIMATELY 7 CY'S (LV) PER SIDE). EXTRA EXCAVATED FILL SHALL BE PLACED ON THE FRONT SIDE OF THE ABUTMENT AND/OR ON THE SIDE SLOPE AS DIRECTED BY THE ENGINEER. THIS SHALL BE INCIDENTAL TO THE APPROACH PANEL.
   - 1.7. CONCRETE FOR BEARING PAD TO BE NON-SHRINK PACKAGED MIX, f'c=4000 PSI MINIMUM.

DESIGN TEAM	NO.	BY	DATE	REVISIONS
DRAWN BY: RAD				
DESIGNER: JAJ				
CHECKED BY: JAJ				

Dakota County

SEH
PHONE: 952.912.2600
10901 RED CIRCLE DRIVE, SUITE 300
MINNETONKA, MN 55343
www.sehinc.com

I HEREBY CERTIFY THAT THIS PLAN WAS PREPARED BY ME OR UNDER MY DIRECT SUPERVISION AND THAT I AM A DULY LICENSED PROFESSIONAL ENGINEER UNDER THE LAWS OF THE STATE OF MINNESOTA.

PRELIMINARY

XXXXXXXXXX, PE
Date: XX/XX/2020 Lic. No. XXXXX

MINNESOTA RIVER GREENWAY - FORT SNELLING SEGMENT

BR01600 - SUBSTRUCTURE MODIFICATIONS

S.P. XXX-XXX-XXX

FILE NO. 155280

x:\aet\d\dakot\15528\05-final-dsgn\51-drawings\20-structdwg\sheet\br01600_details.dwg 5/20/2021 10:25 AM rdantzman

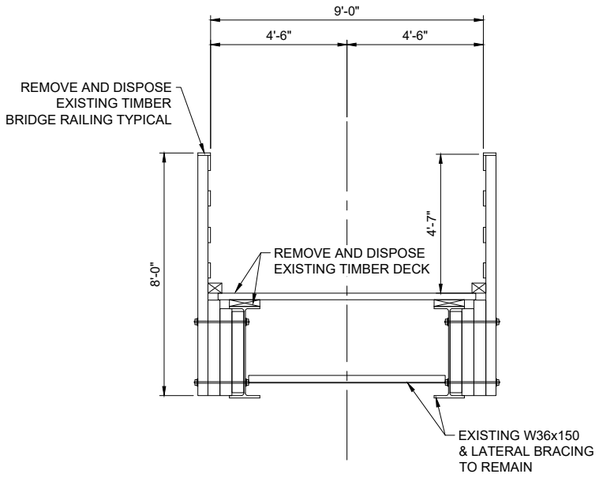

EXISTING DECK SECTION

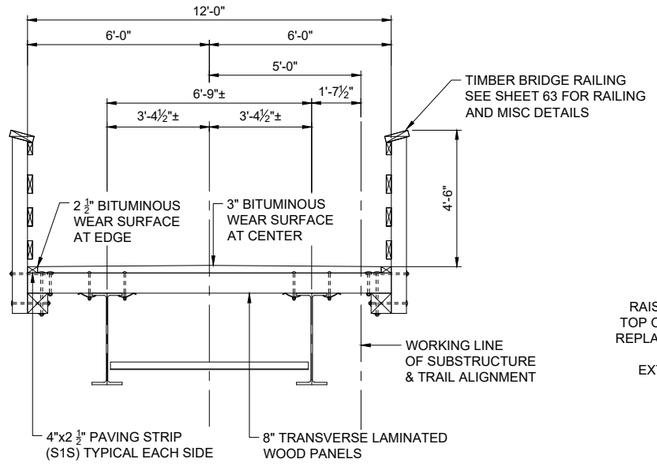

PROPOSED DECK SECTION

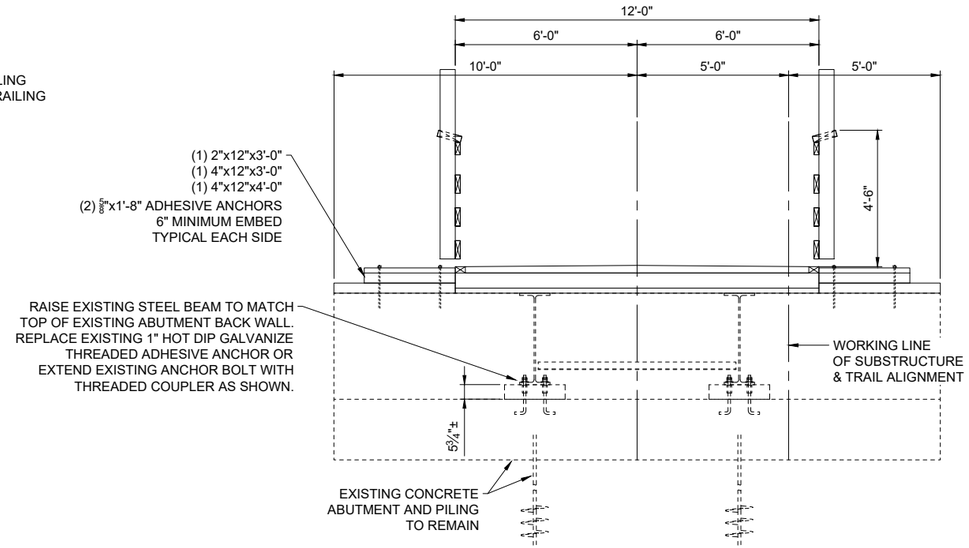

PROPOSED ABUTMENT MODIFICATION

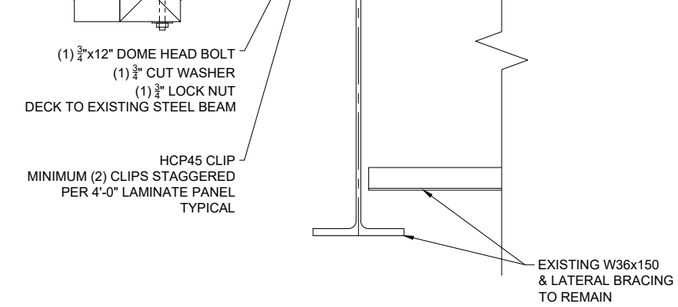

DECK FRAMING CONNECTION TO EXISTING STEEL

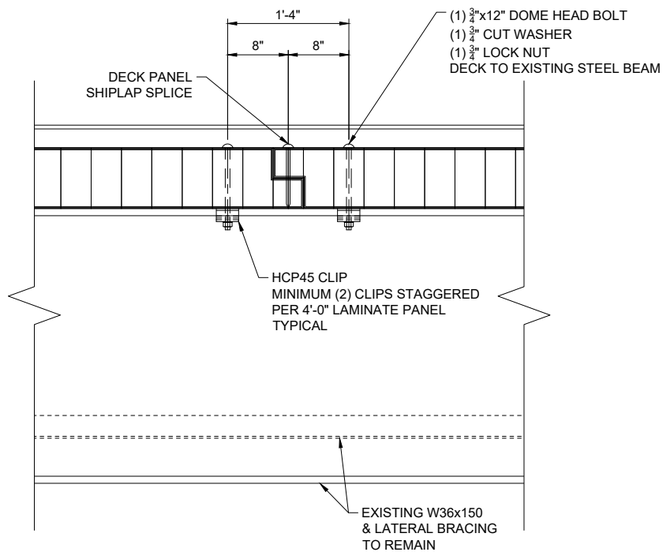

DECK FRAMING CONNECTION TO EXISTING STEEL

x:\ae\d\data\ko\t155280\05-final-dsgn\51-drawings\20-struct\dwg\sheet\br01600_details.dwg 5/20/2021 10:25 AM rdantzman

DRAWN BY: RAD
DESIGNER: JAJ
CHECKED BY: JAJ
DESIGN TEAM

NO.	BY	DATE	REVISIONS

Dakota COUNTY

SEH
PHONE: 952.912.2600
10901 RED CIRCLE DRIVE, SUITE 300
MINNETONKA, MN 55343
www.sehinc.com

I HEREBY CERTIFY THAT THIS PLAN WAS PREPARED BY ME OR UNDER MY DIRECT SUPERVISION AND THAT I AM A DULY LICENSED PROFESSIONAL ENGINEER UNDER THE LAWS OF THE STATE OF MINNESOTA.

PRELIMINARY

XX.XXXXXXXX, PE
Date: XX/XX/2020 Lic. No. XXXXX

MINNESOTA RIVER GREENWAY - FORT SNELLING SEGMENT

BR01600 - TRANSVERSE SECTIONS & DETAILS

S.P. XXX-XXX-XXX
FILE NO. 155280

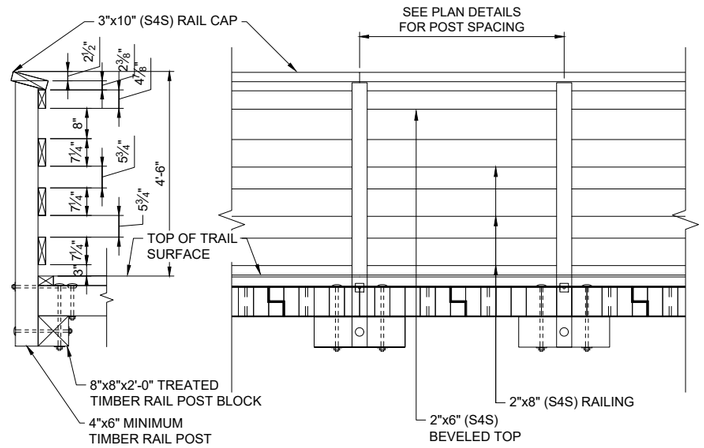

SECTION VIEW ELEVATION VIEW

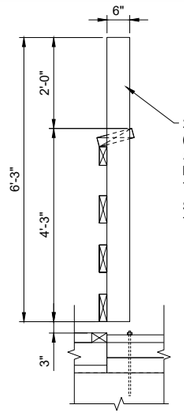

END VIEW

TYPICAL BRIDGE RAILING DETAILS

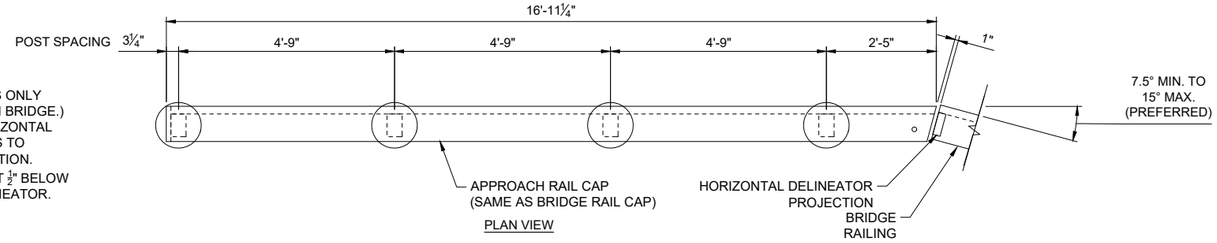

PLAN VIEW

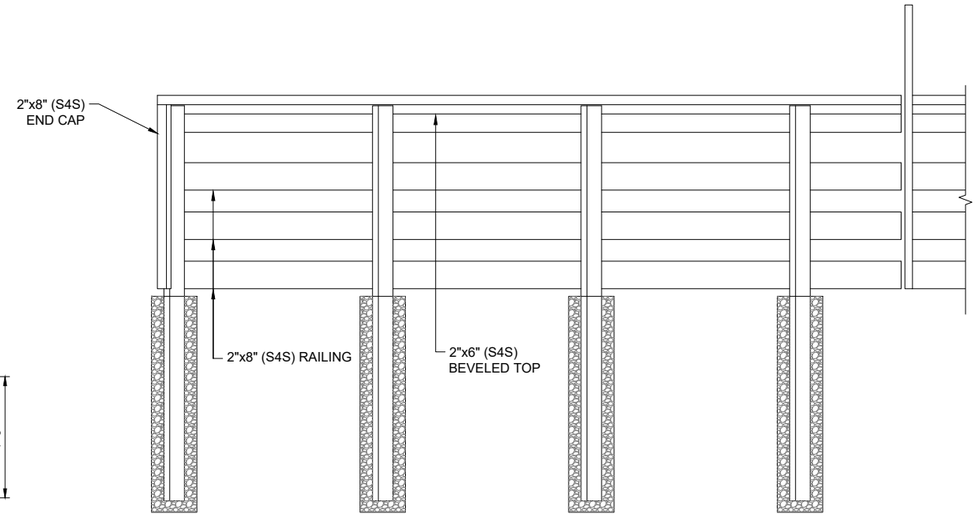

ELEVATION VIEW

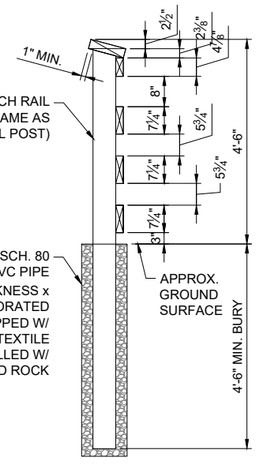

SECTION VIEW

TYPICAL APPROACH RAILING DETAILS

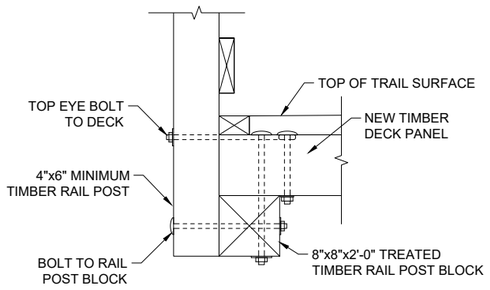

RAILING CONNECTION DETAIL

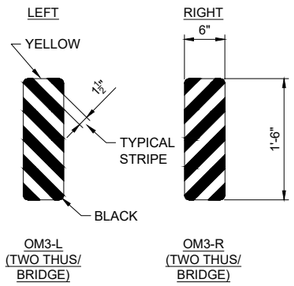

HORIZONTAL DELINEATOR DETAILS

NOTES:

1. TIMBER BRIDGE COMPONENTS--CONSTRUCTION REQUIREMENTS PER MNDOT SPEC. 2403.
   - 1.1. MATERIALS:
     - 1.1.1. ALL TIMBER SHALL BE DOUGLAS FIR NO. 1 EXCEPT THE TIMBER PAVING STRIPS AND TIMBER BEARINGS PADS SHALL BE DOUGLAS FIR NO. 2 OR BETTER.
     - 1.1.2. ALL TIMBER SHALL BE ROUGH SAWN UNLESS NOTED OTHERWISE.
     - 1.1.3. ALL HARDWARE SHALL BE GALVANIZED PER MNDOT SPEC. 3394 UNLESS NOTED OTHERWISE. HARDWARE SHALL BE CONSIDERED INCIDENTAL TO THE PRICE BID FOR THE BID ITEM THAT THE HARDWARE IS ASSOCIATED WITH.
   - 1.2. TIMBER TREATMENT:
     - 1.2.1. ALL, ADZING,BORING, CHAMFERING, CUTTING, GAINING, INCISING, SURFACING, OR TRIMMING SHALL BE DONE PRIOR TO PRESSURE TREATMENT UNLESS OTHERWISE SPECIFIED IN THE PLANS AND SPECIFICATIONS OR APPROVED BY THE ENGINEER.
     - 1.2.2. THE TIMBER FOR THE TRANSVERSE LAMINATED BRIDGE DECK, TIMBER BEARING PADS, RAIL POSTS, AND APPROACH RAIL POSTS, SHALL BE TREATED WITH COPPER NAPHTHENATE IN ACCORDANCE WITH THE MOST CURRENT AWPA STANDARDS FOR UC4B.
     - 1.2.3. THE TIMBER FOR THE BRIDGE RAILING MEMBERS, AND THE APPROACH RAILING MEMBERS SHALL BE TREATED WITH COPPER NAPHTHENATE IN ACCORDANCE WITH THE MOST CURRENT AWPA STANDARDS FOR UC3B.
     - 1.2.4. ALL FIELD CUTS, ABRASIONS, AND DRILLED HOLES SHALL BE THOROUGHLY SATURATED WITH A 2% SOLUTION OF COPPER NAPHTHENATE PER AWPA M4.
     - 1.2.5. SEAL ALL COUNTERBORED HOLES IN THE LAMINATED DECK WITH BITUMINOUS MASTIC MEETING MNDOT SPEC. 3723 OR 3728 AFTER APPROPRIATE TREATMENT PER
     - 1.2.6. THIS WORK SHALL BE CONSIDERED INCIDENTAL TO THE PRICE BID FOR TREATED TIMBER.
   - 1.3. TRANSVERSELY LAMINATED DECK
     - 1.3.1. TIMBER PAVING STRIPS ARE INCIDENTAL TO THE TRANSVERSELY LAMINATED DECK.
       - 1.3.1.1. ATTACH TIMBER PAVING STRIPS TO DECK WITH A MINIMUM OF 1 - $\frac{5}{16}$" x 5" CERAMIC COATED STAR DRIVE LAG SCREW/FT. ALTERNATE FROM EDGE TO EDGE. HARDWARE IS INCIDENTAL TO THE TRANSVERSELY LAMINATED DECK.
     - 1.3.2. HARDWARE SHALL NOT PROTRUDE MORE THAN $\frac{3}{8}$" ABOVE THE DECK'S SURFACE.
   - 1.4. TIMBER RAILING:
     - 1.4.1. RAIL POSTS SHALL BE CONNECTED TO THE DECK SYSTEM UTILIZING THROUGH TYPE BOLTS. NO LAG TYPE BOLTS OR SCREWS ARE ALLOWED FOR THIS CONNECTION.
     - 1.4.2. RAILING MEMBERS SHALL BE ATTACHED TO THE RAIL POSTS WITH A MINIMUM OF 2 - $\frac{5}{16}$" x 4" CERAMIC COATED STAR DRIVE LAG SCREWS PER INTERFACE ON 2"x8" RAILING MEMBERS, AND 3 - $\frac{5}{16}$" x 4" FOR 2"x12" RAILING MEMBERS.
     - 1.4.3. RAIL CAPS SHALL BE SECURED TO THE RAIL POSTS WITH A MINIMUM OF 4 - $\frac{5}{16}$" x 5" CERAMIC COATED STAR DRIVE LAG SCREWS. RAIL CAPS SHALL BE SECURED TO THE TOP RAILING MEMBER WITH A MINIMUM OF 1 - $\frac{5}{16}$" x 4" CERAMIC COATED STAR DRIVE LAG SCREW/FOOT.
     - 1.4.4. ATTACH THE 2"x6" END MEMBER TO RAILS AND RAIL CAPS WITH A MINIMUM OF TWO $\frac{5}{16}$" Ø x 4" STAR DRIVE LAG SCREWS PER INTERFACE.
2. BOLT PROJECTIONS EXCEEDING 1" SHALL BE CUT OFF. REPAIR END OF BOLT BY PAINTING WITH AN APPROVED ZINC-RICH PRIMER.
3. UPSET ALL BOLT THREADS AFTER FINAL TIGHTENING.

x:\lae\cd\data\01552805-final-dsgn\51-drawings\20-struct\dwg\sheet\br01600_details.dwg 5/20/2021 10:25 AM rdantzman

DRAWN BY:	RAD
DESIGNER:	JAJ
CHECKED BY:	JAJ
DESIGN TEAM	

NO.	BY	DATE	REVISIONS

Dakota County

SEH
PHONE: 952.912.2600
10901 RED CIRCLE DRIVE, SUITE 300
MINNETONKA, MN 55343
www.sehinc.com

I HEREBY CERTIFY THAT THIS PLAN WAS PREPARED BY ME OR UNDER MY DIRECT SUPERVISION AND THAT I AM A DULY LICENSED PROFESSIONAL ENGINEER UNDER THE LAWS OF THE STATE OF MINNESOTA.

PRELIMINARY

Name: XX.XXXXXXXXX, PE
Date: XX/XX/2020 Lic. No. XXXXX

MINNESOTA RIVER GREENWAY - FORT SNELLING SEGMENT

BR01600 - RAILING & MISCELLANOUS DETAILS

S.P. XXX-XXX-XXX

FILE NO. 155280

REINFORCING STEEL SCHEDULE (2 APPROACH PANELS)							
BAR NO.	SIZE	SHAPE	QTY.	LENGTH	TOTAL LENGTH (FT.)	WEIGHT LBS.	LOCATION
AP501	5	STR	52	11'-8"	606'-8"	635	APPROACH PANEL

NOTES:
1. REINFORCED CONCRETE APPROACH PANEL:
   1.1. THE NORTH APPROACH PANEL SHALL BE THE EXACT MIRROR OF THE SOUTH APPROACH PANEL SHOWN.
2. REINFORCING STEEL:
   2.1. ALL REBAR IS SIZED USING IMPERIAL UNITS (I.E. #5 = APPROX. 5/8")
   2.2. ALL REINFORCING STEEL SHALL BE CONSTRUCTED FROM 60 KSI STEEL.
   2.3. ALL REINFORCING STEEL SHALL BE COMPLETELY FREE FROM DUST AND DEBRIS PRIOR TO CONCRETE PLACEMENT.

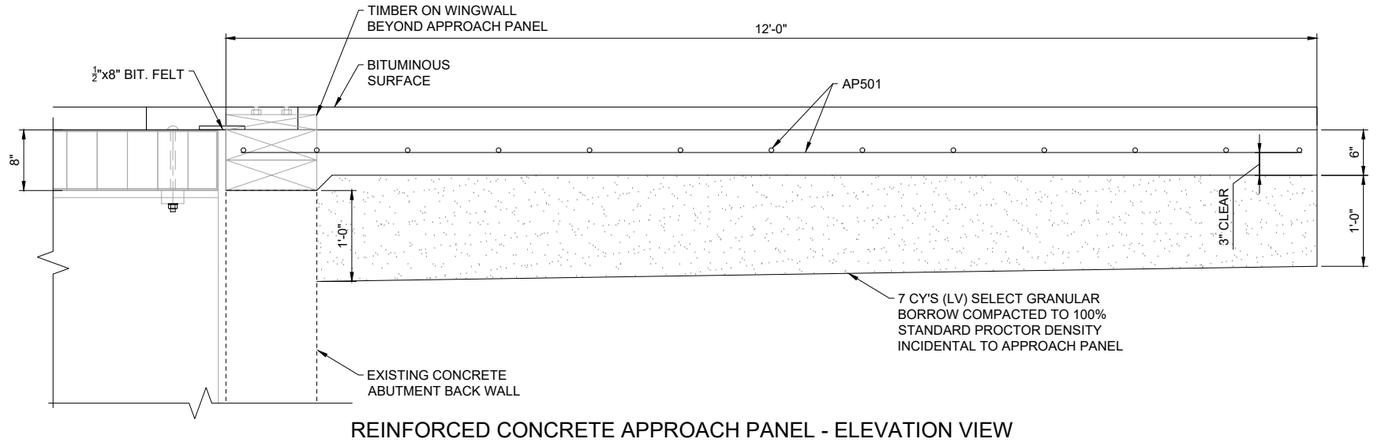

REINFORCED CONCRETE APPROACH PANEL - ELEVATION VIEW

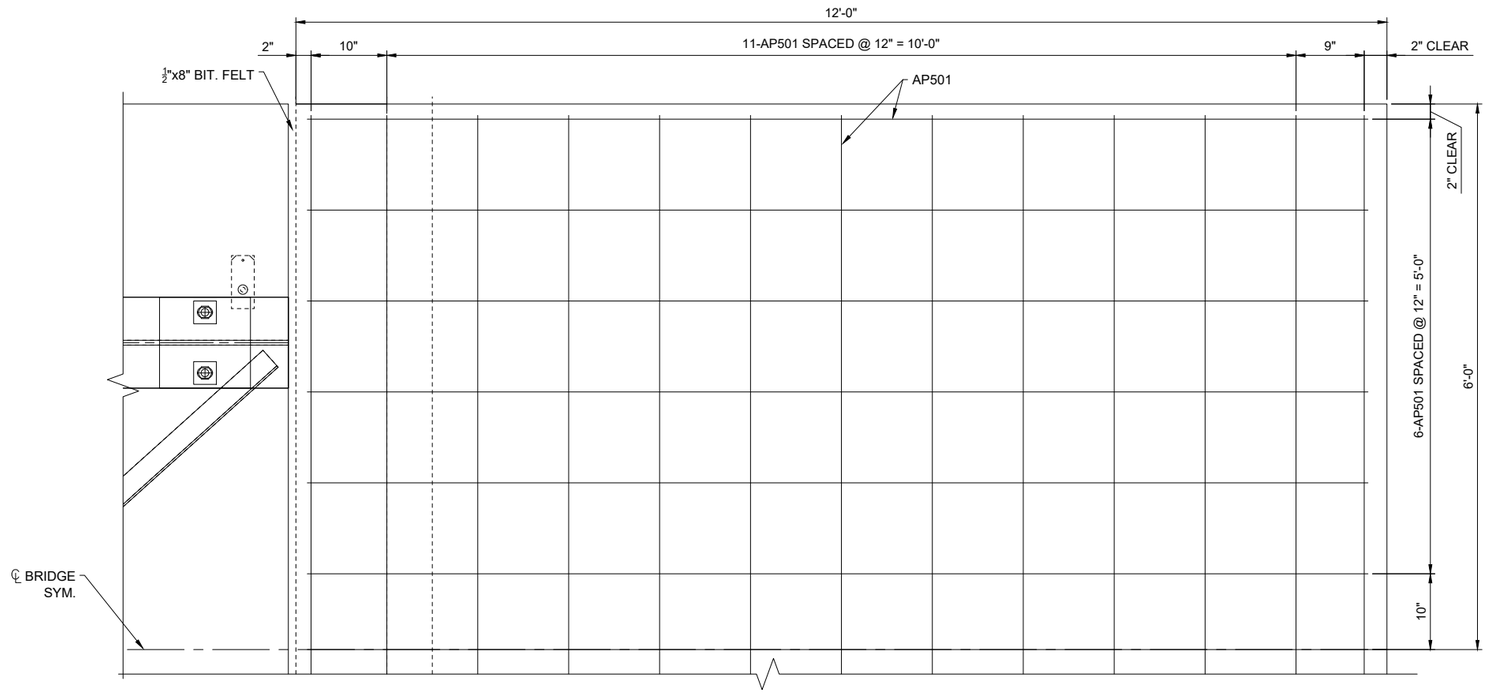

REINFORCED CONCRETE APPROACH PANEL - PLAN VIEW

x:\ae\cl\data\out\155280\5-final-dsgn\51-drawings\20-struct\dwg\sheet\br01600_details.dwg 5/20/2021 10:25 AM rdantzman

DRAWN BY:	RAD
DESIGNER:	JAJ
CHECKED BY:	JAJ
DESIGN TEAM	

NO.	BY	DATE	REVISIONS

Dakota County

SEH
PHONE: 952.912.2600
10901 RED CIRCLE DRIVE,
SUITE 300
MINNETONKA, MN 55343
www.sehinc.com

I HEREBY CERTIFY THAT THIS PLAN WAS PREPARED BY ME OR UNDER MY DIRECT SUPERVISION AND THAT I AM A DULY LICENSED PROFESSIONAL ENGINEER UNDER THE LAWS OF THE STATE OF MINNESOTA.

PRELIMINARY

XXXXXXXXXX, PE

Date: XX/XX/2020 Lic. No. XXXXX

MINNESOTA RIVER GREENWAY - FORT SNELLING SEGMENT

BR01600 - APPROACH PANEL DETAILS

S.P. XXX-XXX-XXX

FILE NO. 155280

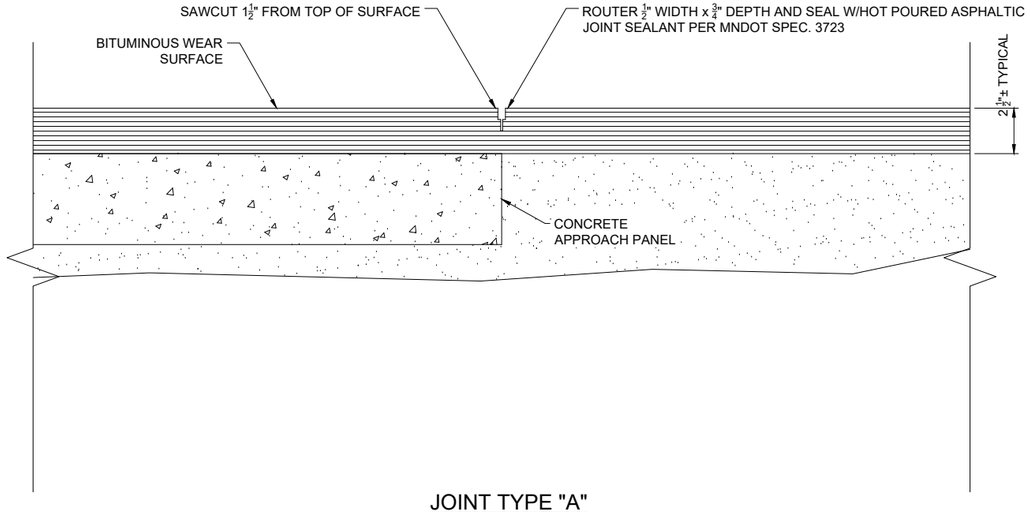

JOINT TYPE "A"

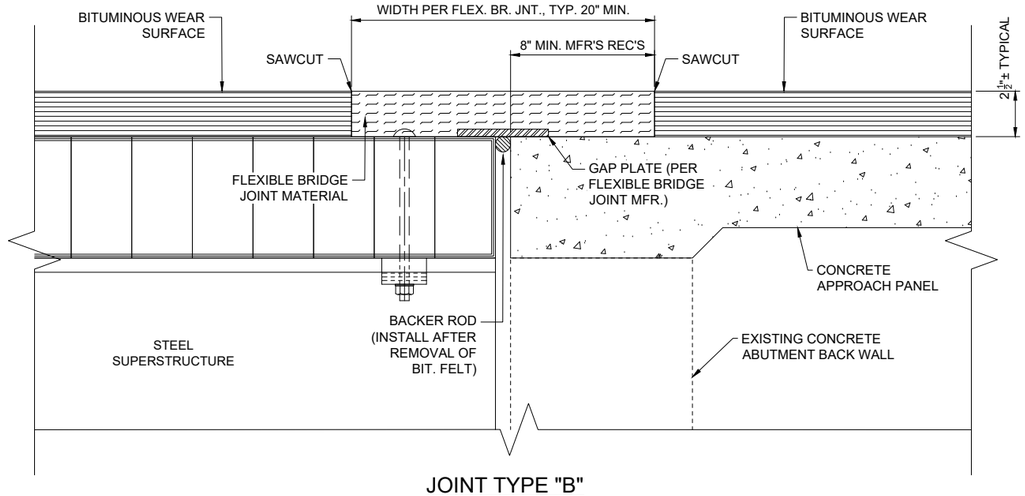

JOINT TYPE "B"

NOTES:

1. BITUMINOUS WEAR SURFACE INSTALLATION:
   - 1.1. ANY GAPS, HOLES, ETC. IN THE TIMBER OVER ⅜" SHALL BE FILLED WITH BITUMINOUS MASTIC PER SPEC. 3723 OR 3728 PRIOR TO ADDING DECK BLOTTER.
   - 1.2. ANY GAPS, HOLES, ETC. IN THE TIMBER OVER ½" SHALL BE REPAIRED OR REINSTALLED AS DETERMINED BY THE ENGINEER
   - 1.3. DECK BLOTTER AND TACK COAT SHALL BE INCIDENTAL TO BITUMINOUS WEAR SURFACE FOR TIMBER BRIDGE DECK.
   - 1.4. TIMBER BRIDGE DECK PREPARATION:
     - 1.4.1. APPLY SURFACE BLOTTER AT A RATE OF 10-15 POUNDS PER SQUARE YARD CONSISTING OF A MIXTURE OF DUST AND 10%-20% CRUSHED MATERIAL PASSING THE NO. 8 SIEVE.
     - 1.4.2. IMMEDIATELY ROLL SURFACE WITH A RUBBER-TIRED ROLLER AFTER PLACEMENT OF SURFACE BLOTTER.
     - 1.4.3. ALLOW UP TO ONE WEEK FOR EXCESS/FREE PRESERVATIVE TO BE ABSORBED.
     - 1.4.4. REMOVE BLOTTER BY BROOMING.
     - 1.4.5. REAPPLY SURFACE BLOTTER IF SURFACE IS NOT FREE OF EXCESS PRESERVATIVE.
   - 1.5. APPLY TACK COAT AT RATE OF 0.15 GALLONS PER SQUARE YARD ON BRIDGE DECK AFTER BLOTTER HAS BEEN REMOVED AND APPROVED BY ENGINEER. DO NOT TACK COAT DECK BLOTTER TO BRIDGE DECK.
   - 1.6. USE VIBRATORY PLATE COMPACTOR ALONG PAVING STRIP PRIOR TO ROLLING BITUMINOUS SURFACE.
2. BITUMINOUS APPROACHES:
   - 2.1. LENGTHS SHOWN ARE APPROXIMATE AND SHALL BE USED FOR DETERMINING THE CONTRACT PRICE. THE FINAL DIMENSIONS WILL VARY DEPENDING ON CRACK LOCATION, SITE ACCESS, EXISTING TRAIL CONDITION ETC.
   - 2.2. THE PAVING EXTENTS SHALL BE MARKED BY THE ENGINEER PRIOR TO CONSTRUCTION.
   - 2.3. ANY DAMAGE TO EXISTING BITUMINOUS APPROACHES NOT DESIGNATED FOR REPLACEMENT, SHALL BE REPAIRED/REPLACED AT THE CONTRACTORS EXPENSE.
3. ASPHALTIC JOINT NOTES:
   - 3.1. JOINT SHALL BE INSTALLED WITHIN THE TEMPERATURE RANGE AS SPECIFIED BY THE MANUFACTURER.
   - 3.2. APPROVED PRODUCTS: DS BROWN MATRIX 502, DSA-LTD. THORMA-JOINT, WABO EXPANDEX.
     - 3.2.1. OTHER SIMILAR PRODUCTS MUST BE PRE-APPROVED BY PROJECT ENGINEER.
   - 3.3. APPROVAL - SUBMITTALS OF ALL PRODUCTS REQUIRED PRIOR TO CONSTRUCTION.
   - 3.4. NOTIFICATION OF ENGINEER (1 WEEK NOTICE) OF CONSTRUCTION.
   - 3.5. GENERIC STEPS ARE PROVIDED HOWEVER INSTALLATION SHALL BE PERFORMED PER THE MANUFACTURERS REQUIREMENTS AND RECOMMENDATIONS.
   - 3.6. STEPS FOR INSTALLATION OF FLEXIBLE BRIDGE JOINT INCLUDE:
     - 3.6.1. ENGINEER SHALL INSPECT ALL PRODUCTS PRIOR TO CONSTRUCTION. NO CONSTRUCTION SHALL START IF ALL THE NECESSARY PRODUCTS ARE NOT ONSITE AND APPROVED BY THE ENGINEER.
     - 3.6.2. FACTORY REPRESENTATIVE OR CERTIFIED PERSONNEL MUST BE ON SITE FOR CONSTRUCTION.
     - 3.6.3. MARK JOINT EDGES AND SAWCUT PAVEMENT ON EACH JOINT. MINIMUM JOINT WIDTH SHALL BE 20" WIDE UNLESS OTHERWISE SPECIFIED BY THE MANUFACTURER.
     - 3.6.4. REMOVE PAVEMENT AND ALL DEBRIS FROM JOINT AND SURROUNDING AREA.
     - 3.6.5. PATCH THE JOINT FLOOR IF NEEDED TO PROVIDE A LEVEL BASE FOR THE GAP PLATE USING A MATERIAL APPROVED BY THE MANUFACTURER OR THE PROJECT ENGINEER.
     - 3.6.6. GRIT BLAST JOINT SURFACES AND DRY WITH A HOT COMPRESSED AIR LANCE.
     - 3.6.7. REMOVE BITUMINOUS FELT FROM GAP BETWEEN TIMBER DECK AND CONCRETE APPROACH PANEL AND INSTALL BACKER ROD PER MANUFACTURER'S RECOMMENDATIONS.
     - 3.6.8. COAT ALL SURFACES WITH A SURFACE CONDITIONER IF REQUIRED BY MANUFACTURER AND LET DRY.
     - 3.6.9. APPLY A THIN LAYER OF BITUMINOUS MASTIC ADHESIVE AND EMBED GAP PLATE WHILE MASTIC IS HOT. USE LOCATING PINS IF INSTRUCTED BY THE MANUFACTURER.
     - 3.6.10. APPLY HOT BITUMINOUS MASTIC ADHESIVE ONTO ALL REMAINING UNCOATED SURFACES INCLUDING THE GAP PLATE AND LET COOL.
     - 3.6.11. APPLY FLEXIBLE BRIDGE JOINT MATERIAL AS SPECIFIED BY MANUFACTURER.
     - 3.6.12. PLACE FINAL LAYER OF FLEXIBLE BRIDGE JOINT MATERIAL TO A HEIGHT THAT IS JUST ABOVE THE ADJOINING MATERIAL AS DIRECTED BY MANUFACTURER.
     - 3.6.13. COMPACT THE JOINT MATERIAL PER THE MANUFACTURERS INSTRUCTIONS USING A 1.5 TO 2 TON ROLLER, FIRST TRANSVERSE TO THE JOINT, AND THEN LONGITUDINAL WITH THE JOINT.
     - 3.6.14. FINISHED SURFACE SHALL BE FIRM AND SMOOTH WITH NO EXPOSED AGGREGATE AND NO VERTICAL RISE OF MORE THAN ⅛"
     - 3.6.15. ANY VOIDS OR TOLERANCE CORRECTIONS SHALL BE CONSTRUCTED UTILIZING MANUFACTURER APPROVED BITUMINOUS PRODUCT MIXED WITH FINE SILICA SAND. THIS PROCEDURE SHALL BE IN ACCORDANCE WITH THE MANUFACTURER'S RECOMMENDATIONS.

x:\ae\d\dako\t\155280\5-final-dsgn\51-drawings\20-struct\dwg\sheet\br01600_details.dwg 5/20/2021 10:25 AM rdantzman

DESIGN TEAM	NO.	BY	DATE	REVISIONS
DRAWN BY: RAD				
DESIGNER: JAJ				
CHECKED BY: JAJ				

Dakota County

SEH
PHONE: 952.912.2600
10901 RED CIRCLE DRIVE, SUITE 300
MINNETONKA, MN 55343
www.sehinc.com

I HEREBY CERTIFY THAT THIS PLAN WAS PREPARED BY ME OR UNDER MY DIRECT SUPERVISION AND THAT I AM A DULY LICENSED PROFESSIONAL ENGINEER UNDER THE LAWS OF THE STATE OF MINNESOTA.

PRELIMINARY

FIRST LAST NAME, PE
Date: XX/XX/2020 Lic. No. XXXXX

MINNESOTA RIVER GREENWAY - FORT SNELLING SEGMENT

BR01600 - PAVING DETAILS

S.P. XXX-XXX-XXX

FILE NO. 155280

Appendix C

Rail Crossing Bridge Project General Layout, Project Visualization Exhibits and Typical Sections

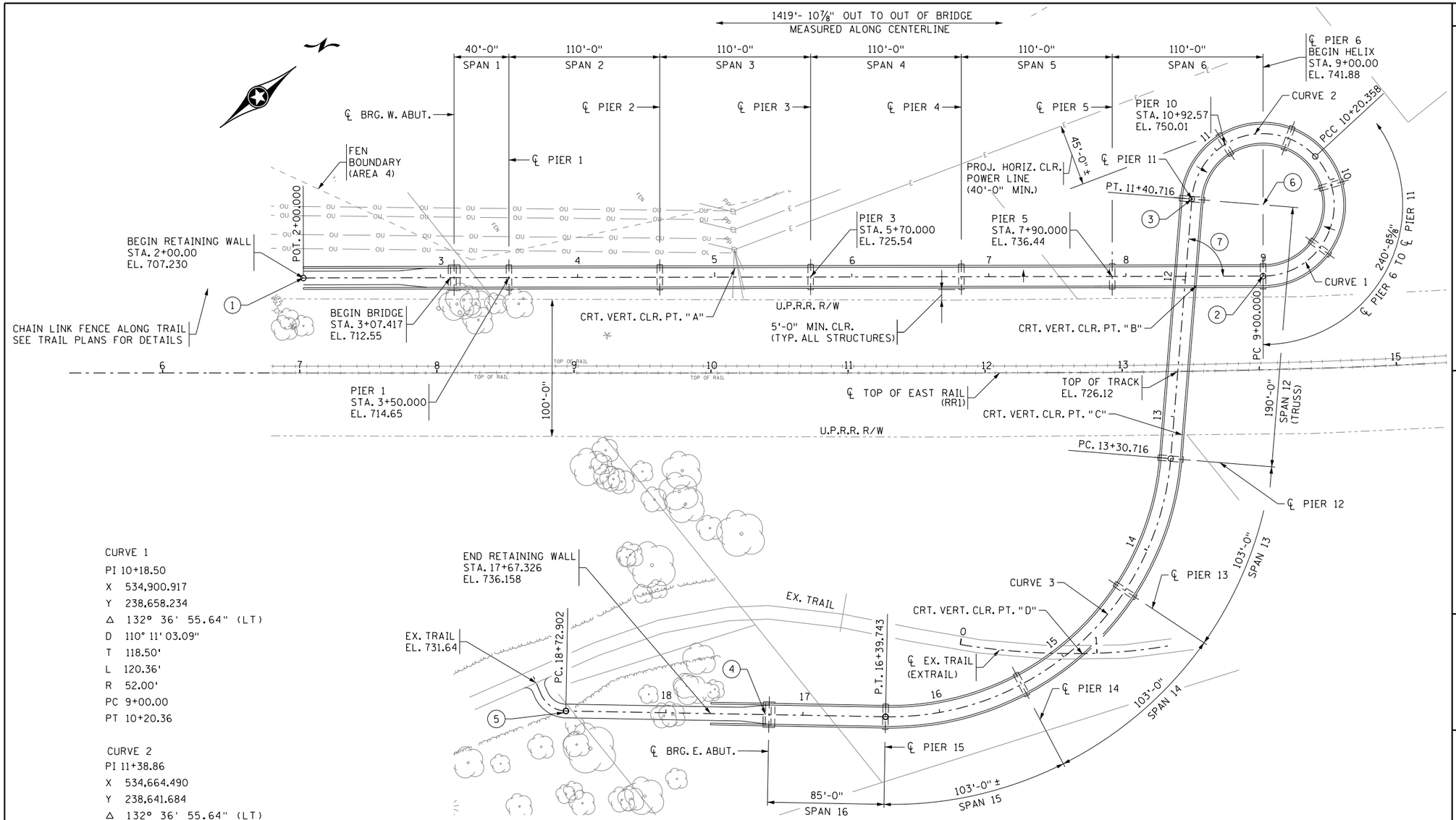

CURVE 1
PI 10+18.50
X 534,900.917
Y 238,658.234
Δ 132° 36' 55.64" (LT)
D 110° 11' 03.09"
T 118.50'
L 120.36'
R 52.00'
PC 9+00.00
PT 10+20.36

CURVE 2
PI 11+38.86
X 534,664.490
Y 238,641.684
Δ 132° 36' 55.64" (LT)
D 110° 11' 03.09"
T 118.50'
L 120.36'
R 52.00'
PC 10+20.36
PT 11+40.72

CURVE 3
PI 15+23.12
X 535,028.557
Y 238,297.640
Δ 86° 22' 13.29" (RT)
D 27° 56' 56.98"
T 192.41'
L 309.03'
R 205.00'
PC 13+30.72
PT 16+39.74

CRITICAL VERTICAL CLEARANCES

CRITICAL VERTICAL CLEARANCE "A"
STRUCTURE 38 = EL. 749.30
TOP OF DECK AT STATION 5+14.50, EL. 722.72
CLEARANCE = 26.58' (20.30' REQ'D.)

CRITICAL VERTICAL CLEARANCE "B"
BETWEEN TOP OF DECK AND BOTTOM OF TRUSS
10.56' (10.00' REQ'D.)

CRITICAL VERTICAL CLEARANCE "C"
BETWEEN TOP OF TRACK (EL. 726.12) AND BOTTOM OF TRUSS
AT EAST RAILROAD RIGHT OF WAY
23.94' (23.33' REQ'D)

CRITICAL VERTICAL CLEARANCE "D"
BETWEEN TOP OF TRAIL AND BOTTOM OF GIRDER
11.16' (10.00' REQ'D.)

(1) ℄ TRAIL (TRAIL)
STA. 2+00.000
X = 534390.144 Y = 238018.658

(2) ℄ PIER 6 & BEGIN HELIX CURVE
℄ TRAIL (TRAIL) STA. 9+00.000
X = 534826.967 Y = 238565.637

(3) ℄ PIER 11 & END HELIX CURVE
℄ TRAIL (TRAIL) STA. 11+40.716
X = 534750.619 Y = 238560.292

(4) END OF BRIDGE
STA. 17+27.326
EL. 737.878

(5) ℄ TRAIL (TRAIL)
STA. 18+72.902
EL. 732.390
X = 534756.428 Y = 237970.449

(6) CENTER OF HELIX
X = 534786.334 Y = 238598.086
RADIUS TO ℄ TRAIL (TRAIL) = 52.00'

(7) 85° 13' 51.3"

CONSTRUCTION NOTES:

THE 2018 EDITION OF THE MINNESOTA DEPARTMENT OF TRANSPORTATION "STANDARD SPECIFICATIONS FOR CONSTRUCTION" SHALL GOVERN.

ALL EXPOSED CONCRETE EDGES SHALL BE FORMED WITH A 3/4" CHAMFER UNLESS OTHERWISE NOTED.

CONSTRUCTION SHALL BE IN ACCORDANCE WITH SPEC. 2411, EXCEPT AS NOTED.

THE BAR SIZES SHOWN IN THIS PLAN ARE IN U.S. CUSTOMARY DESIGNATIONS.

THE BARS MARKED WITH THE SUFFIX "E" SHALL BE EPOXY COATED.

DRAWINGS ARE NOT TO BE SCALED.

BRIDGE SEAT REINFORCEMENT SHALL BE CAREFULLY PLACED TO AVOID INTERFERENCE WITH DRILLING HOLES FOR ANCHOR RODS. THE SUPERSTRUCTURE SHALL BE ERECTED IN FINAL POSITION PRIOR TO DRILLING HOLES FOR AND PLACING ANCHOR BOLTS.

DESIGN DATA

IN ACCORDANCE WITH 2020 AASHTO LRFD BRIDGE DESIGN SPECIFICATIONS, 2009 LRFD GUIDE SPECIFICATIONS FOR THE DESIGN OF PEDESTRIAN BRIDGES W/ 2015 INTERIM REVISIONS.
PEDESTRIAN LOADING: 90 PSF
DESIGN VEHICLE: H10 (20,000 LBS.)
MATERIAL DESIGN PROPERTIES:
REINFORCED CONCRETE:
f'c = 4 KSI n = 8
fy = 60 KSI REINFORCEMENT
STRUCTURAL STEEL:
WEATHERING STEEL, PER MNDOT 3309 & 3361 TYPE C (UNPAINTED)
fy = 50,000 PSI MINIMUM
PRESTRESSED CONCRETE:
n = 1 FOR PRESTESSING STRANDS
f'c = 9 KSI
fpu = 270 ksi LOW LAX. STRANDS
0.75 fpu FOR INITIAL PRESTRESS
DESIGN SPEED:
OVER = 20 MPH
APPROXIMATE DECK AREA XXXX SQ. FT.

BOLTON & MENK
7533 SUNWOOD DRIVE N.W.
RAMSEY, MINNESOTA 55303
Phone: (763) 433-2851
Email: Ramsey@bolton-menk.com
www.bolton-menk.com

MINNESOTA DEPARTMENT OF TRANSPORTATION

BRIDGE NO. XXXXX

LOCATED IN THE CITY OF EAGAN MN.
3.03 MILES NORTH FROM THE INTERSECTION
OF CEDAR AVE. AND THE UNION PACIFIC R.R. ALONG THE TRACKS
240'-8⅝" CONCRETE HELEX , 180'-0" STEEL TRUSS SPAN
5 – 110'-0" , 1 – 40'-0" PRESTRESSED BEAM SPANS
3 – 103'-0" , 1 – 85'-0" STEEL GIRDER SPANS

IDENTIFICATION NO. XXX

GENERAL PLAN

SEC. 4 T 27 N R 23 W
CITY OF EAGAN DAKOTA COUNTY

APPROVED _____ DATE _____
DAKOTA COUNTY ENGINEER

APPROVED _____ DATE _____
STATE BRIDGE ENGINEER

JOB NO.	STATE PROJECT NO. XXX-XXX-XXX	SHEET NO. 1 OF 22 SHEETS	XXXXX	ATP	JMR
				JJS	JJS

H:\DACO\T4411793 4\CADD\MS\Prelim\Bridge\Sheets\cbrxxxxx_si2001.dgn bmi.tbl
johnre pdf-B and W.pltcfg
12/18/2020 10:43:17 AM

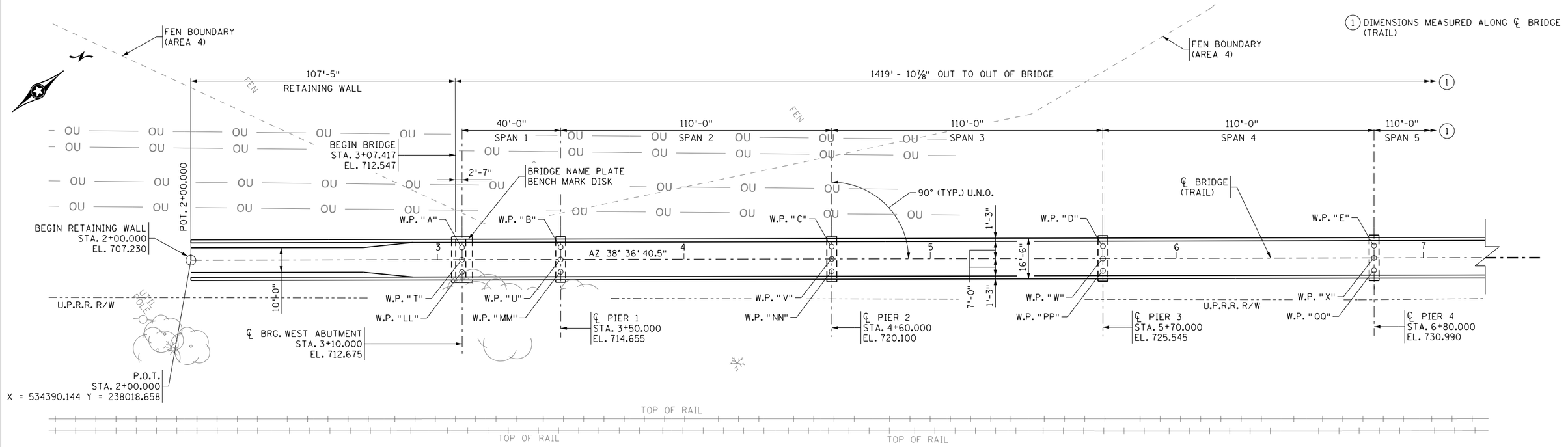

GENERAL PLAN

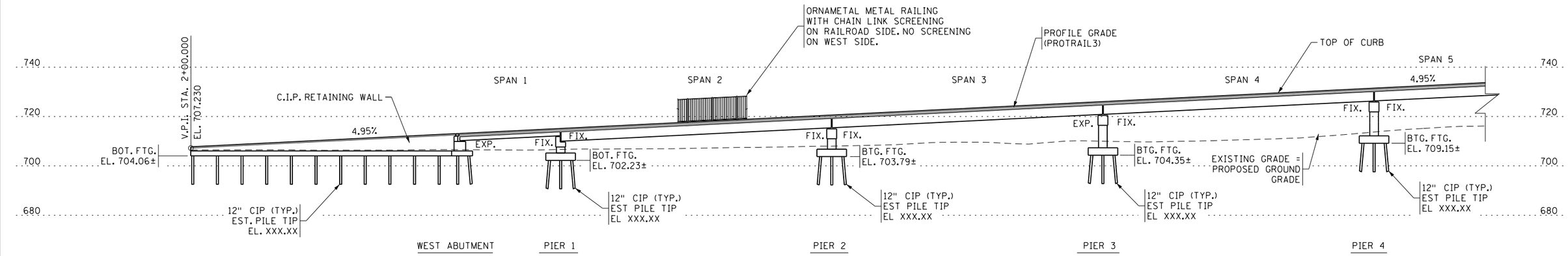

GENERAL DEVELOPED ELEVATION

NOTES:

SURFACE ELEVATION DATA IS FROM LIDAR POINTS THAT WERE COLLECTED IN 2011 AND PROVIDED BY THE MINNESOTA GEOSPATIAL INFORMATION OFFICE.

DESIGNED	DATE	REVISION DESCRIPTION	DR.	CHK.	APP'D.

BOLTON & MENK
7533 SUNWOOD DRIVE N.W.
RAMSEY, MINNESOTA 55303
Phone: (763) 433-2851
Email: Ramsey@bolton-menk.com
www.bolton-menk.com

TITLE:
GENERAL PLAN AND ELEVATION
SHEET 1 OF 4

DESIGNED ATP	DRAWN JMR	APPROVED	
CHECKED RRE	CHECK RRE		
XXXXXXXXXXX BRIDGE			
SHEET NO. 2 OF 22 SHEETS			BRIDGE NO. XXXXX

H:\DACO\T44117934\CAD\MS\Prelim\Bridge\Sheets\cbrxxxxx_s12002.dgn
johnre 12/18/2020 10:43:18 AM
pdf-B and W.pltcfg
bmi.tbl

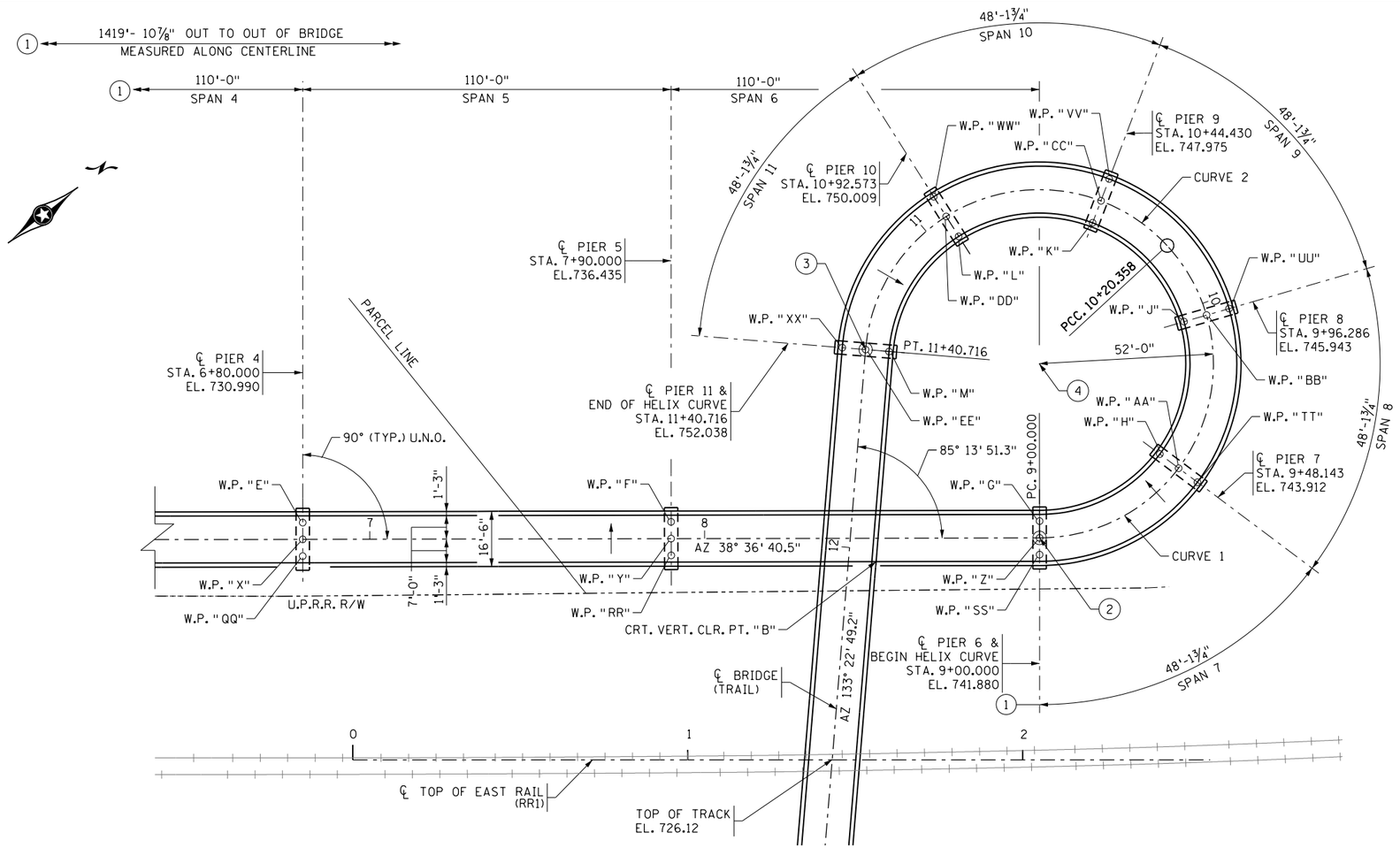

GENERAL PLAN

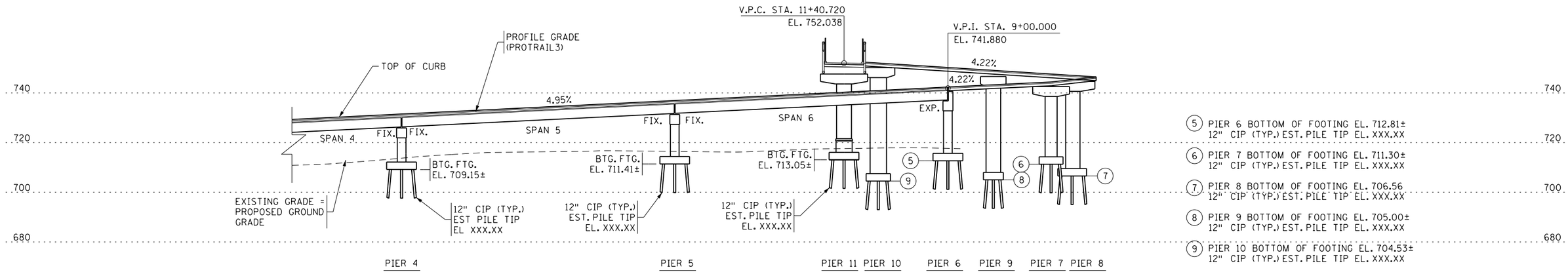

GENERAL DEVELOPED ELEVATION

1. DIMENSIONS MEASURED ALONG ℄ BRIDGE (TRAIL)
2. ℄ PIER 6 & BEGIN HELIX CURVE
   ℄ TRAIL (TRAIL) STA. 9+00.000
   X = 534826.967 Y = 238565.637
3. ℄ PIER 11 & END HELIX CURVE
   ℄ TRAIL (TRAIL) STA. 11+40.716
   X = 534750.619 Y = 238560.292
4. CENTER OF HELIX
   X = 534786.334 Y = 238598.086
   RADIUS TO ℄ TRAIL (TRAIL) = 52.00'

NOTES:

SURFACE ELEVATION DATA IS FROM LIDAR POINTS THAT WERE COLLECTED IN 2011 AND PROVIDED BY THE MINNESOTA GEOSPATIAL INFORMATION OFFICE.

5. PIER 6 BOTTOM OF FOOTING EL. 712.81±
   12" CIP (TYP.) EST. PILE TIP EL. XXX.XX
6. PIER 7 BOTTOM OF FOOTING EL. 711.30±
   12" CIP (TYP.) EST. PILE TIP EL. XXX.XX
7. PIER 8 BOTTOM OF FOOTING EL. 706.56
   12" CIP (TYP.) EST. PILE TIP EL. XXX.XX
8. PIER 9 BOTTOM OF FOOTING EL. 705.00±
   12" CIP (TYP.) EST. PILE TIP EL. XXX.XX
9. PIER 10 BOTTOM OF FOOTING EL. 704.53±
   12" CIP (TYP.) EST. PILE TIP EL. XXX.XX

DESIGNED	DATE	REVISION DESCRIPTION	DR.	CHK.	APP'D.

BOLTON & MENK
7533 SUNWOOD DRIVE N.W.
RAMSEY, MINNESOTA 55303
Phone: (763) 433-2851
Email: Ramsey@bolton-menk.com
www.bolton-menk.com

TITLE:
GENERAL PLAN AND ELEVATION
SHEET 2 OF 4

DESIGNED ATP	DRAWN JMR	APPROVED
CHECKED RRE	CHECK RRE	

XXXXXXXXXXX BRIDGE

SHEET NO. 3 OF 22 SHEETS

BRIDGE NO. XXXXX

H:\DACO\T44117934\CAD\MS\Prelim\Bridge\Sheets\cbrxxxxx_s12003.dgn
johnre 12/18/2020 10:43:19 AM pdf-B and W.pltcfg bmi.tbl

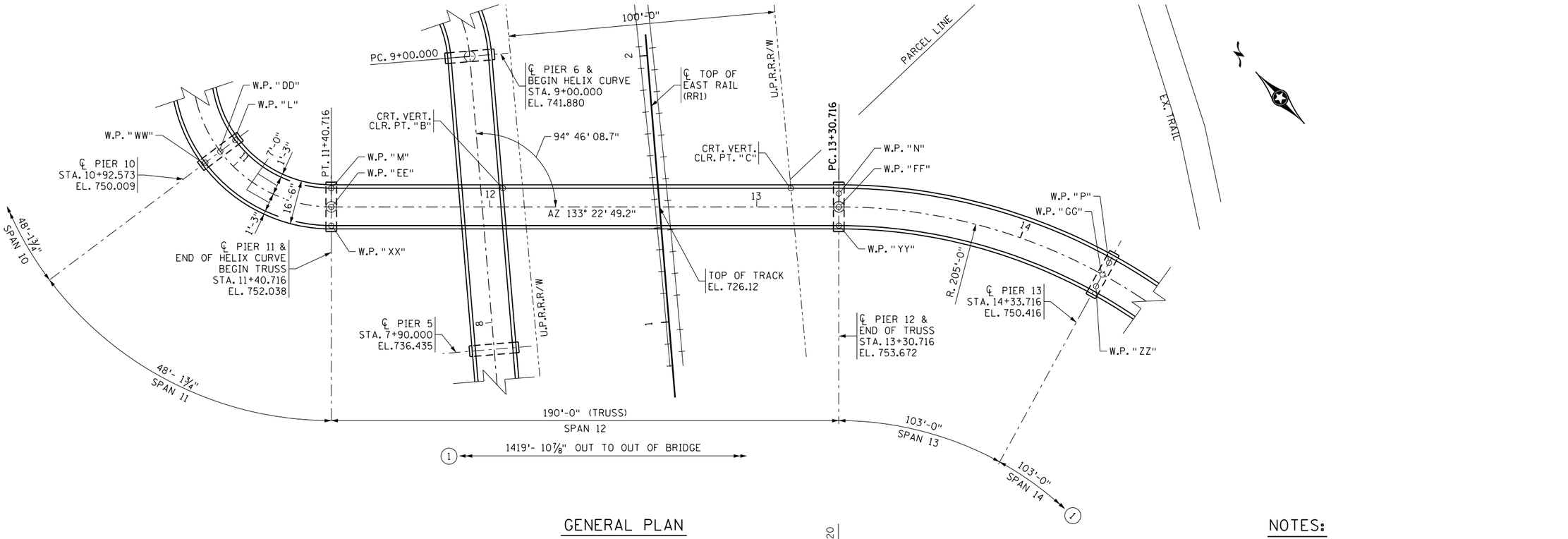

GENERAL PLAN

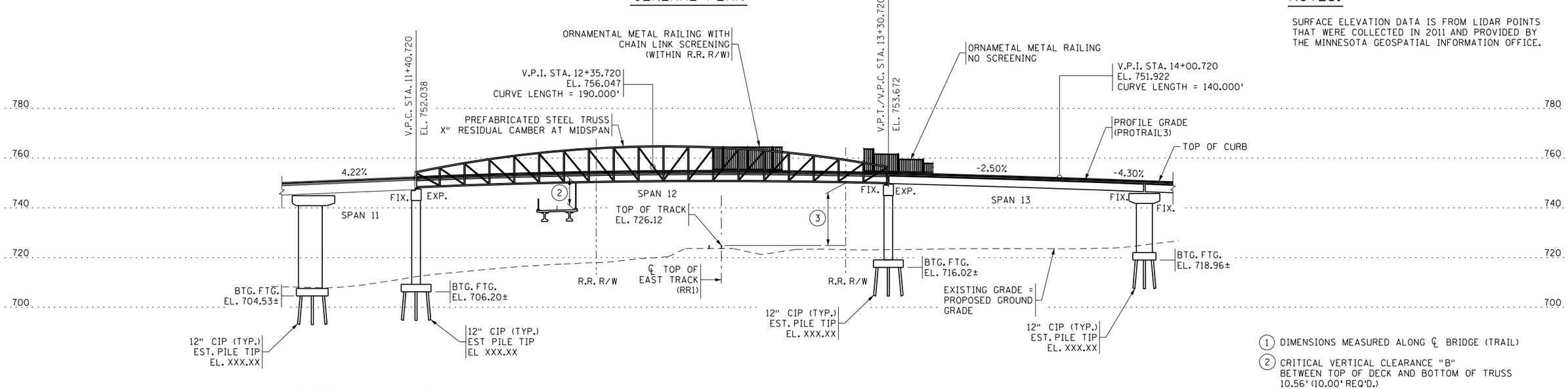

GENERAL DEVELOPED ELEVATION

NOTES:

SURFACE ELEVATION DATA IS FROM LIDAR POINTS THAT WERE COLLECTED IN 2011 AND PROVIDED BY THE MINNESOTA GEOSPATIAL INFORMATION OFFICE.

(1) DIMENSIONS MEASURED ALONG ℄ BRIDGE (TRAIL)

(2) CRITICAL VERTICAL CLEARANCE "B" BETWEEN TOP OF DECK AND BOTTOM OF TRUSS 10.56' (10.00' REQ'D.)

(3) CRITICAL VERTICAL CLEARANCE "C" BETWEEN TOP OF TRACK (EL. 726.12) AND BOTTOM OF TRUSS AT EAST RAILROAD RIGHT OF WAY 23.94' (23.33' REQ'D)

DESIGNED	DATE	REVISION DESCRIPTION	DR.	CHK.	APP'D.

BOLTON & MENK
7533 SUNWOOD DRIVE N.W.
RAMSEY, MINNESOTA 55303
Phone: (763) 433-2851
Email: Ramsey@bolton-menk.com
www.bolton-menk.com

TITLE:
GENERAL PLAN AND ELEVATION
SHEET 3 OF 4

DESIGNED ATP	DRAWN JMR	APPROVED	
CHECKED RRE	CHECK RRE		

XXXXXXXXXX BRIDGE

SHEET NO. 4 OF 22 SHEETS

BRIDGE NO. XXXXX

H:\DACO\T44117934\CAD\MS\Prelim\Bridge\Sheets\cbrxxxxx_sl2004.dgn bmi.tbl
Johnre 12/18/2020 10:43:20 AM pdf-B and W.pltcfg

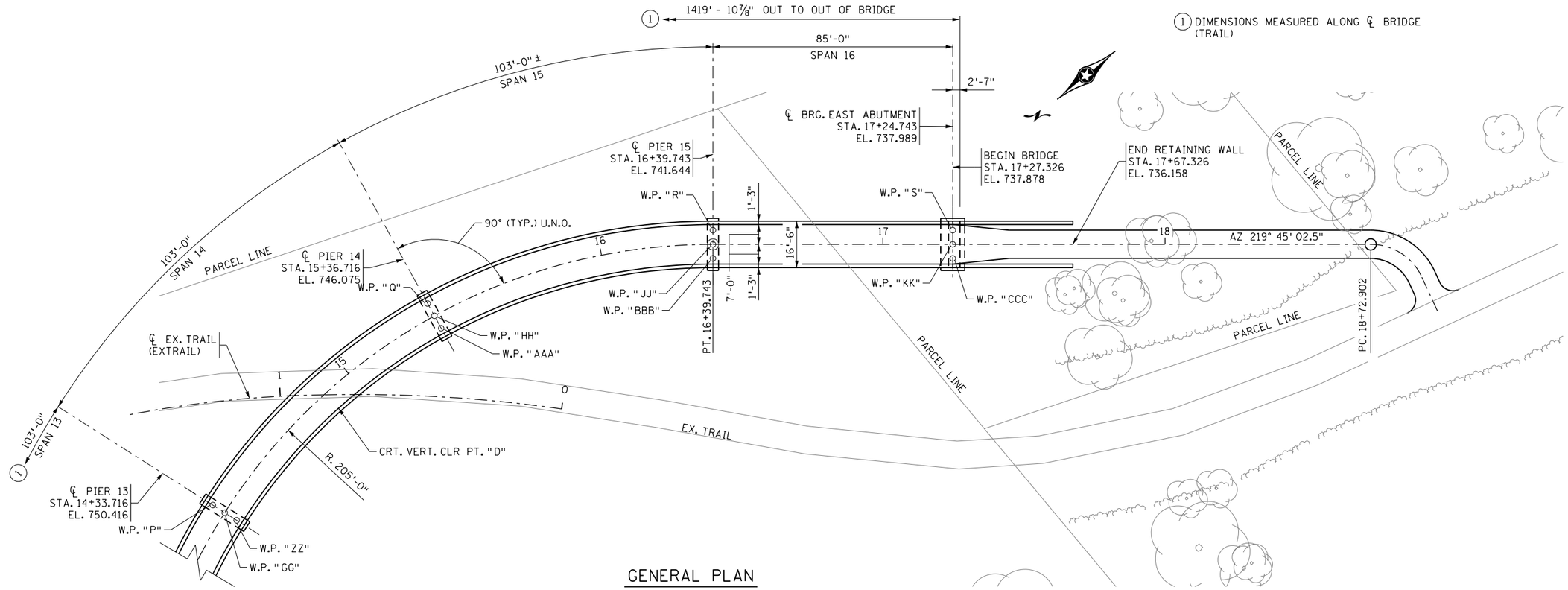

GENERAL PLAN

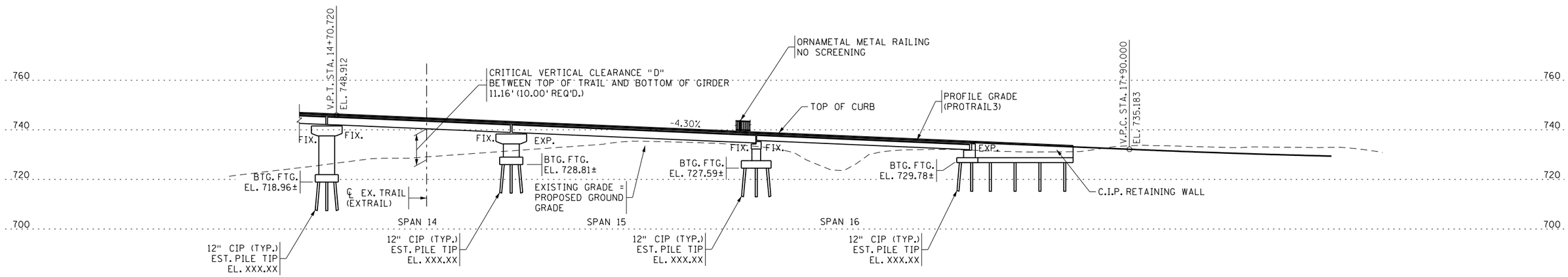

GENERAL DEVELOPED ELEVATION

NOTES:

SURFACE ELEVATION DATA IS FROM LIDAR POINTS THAT WERE COLLECTED IN 2011 AND PROVIDED BY THE MINNESOTA GEOSPATIAL INFORMATION OFFICE.

DESIGNED	DATE	REVISION DESCRIPTION	DR.	CHK.	APP'D.

BOLTON & MENK
7533 SUNWOOD DRIVE N.W.
RAMSEY, MINNESOTA 55303
Phone: (763) 433-2851
Email: Ramsey@bolton-menk.com
www.bolton-menk.com

TITLE:
GENERAL PLAN AND ELEVATION
SHEET 4 OF 4

DESIGNED	ATP	DRAWN	JMR	APPROVED
CHECKED	RRE	CHECK	RRE	

XXXXXXXXXXX BRIDGE

SHEET NO. 5 OF 22 SHEETS

BRIDGE NO. XXXXX

H:\DAC0\T44117934\CAD\MS\Prelim\Bridge\Sheets\cbrxxxxx_sl2005.dgn
johnre
12/18/2020
10:43:21 AM
pdf-B and W.pltcfg
bmi.tbl

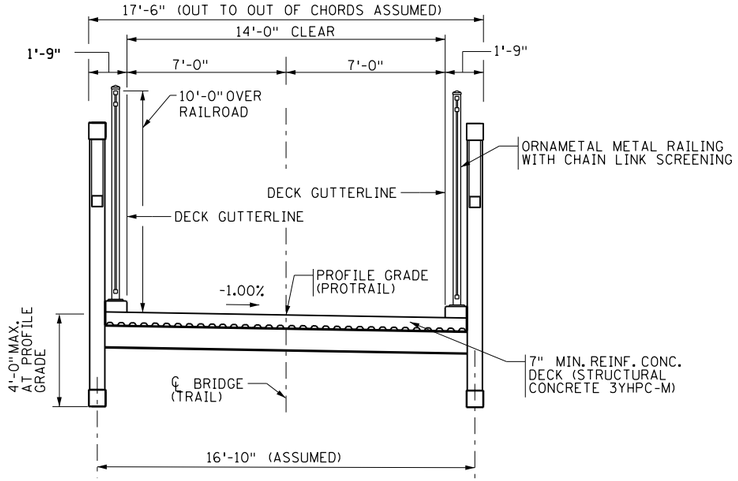

BRIDGE SECTION
TRUSS
SPAN 12

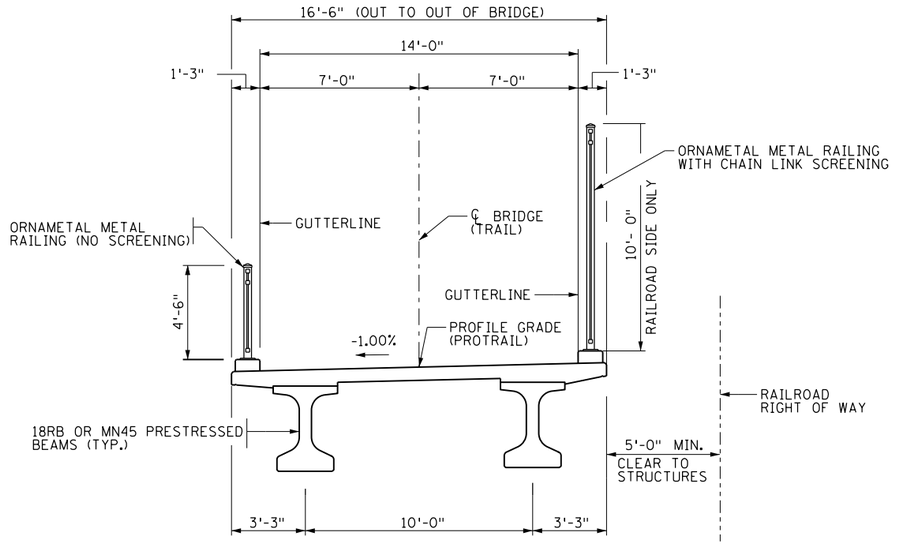

BRIDGE SECTION
PRESTRESSED BEAMS
SPAN 1 - SPAN 6

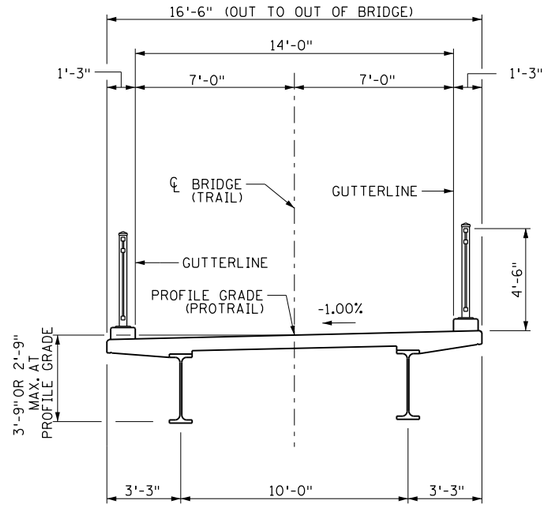

BRIDGE SECTION
PRESTRESSED BEAMS
SPAN 13 - SPAN 16

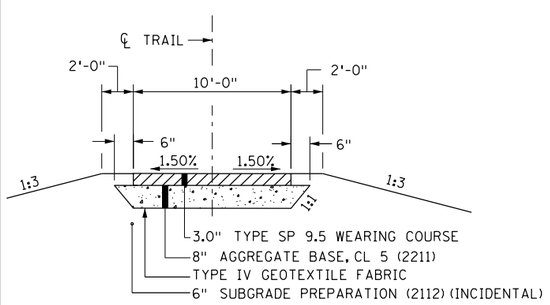

PROPOSED TRAIL SECTION

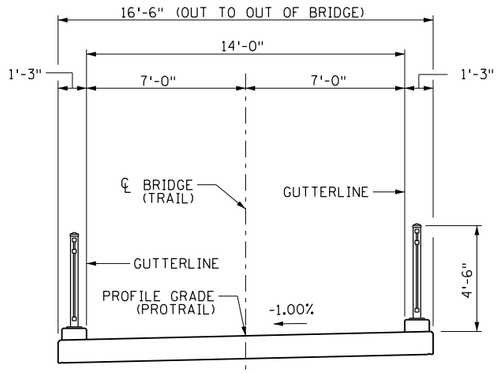

BRIDGE SECTION
HELIX SLAB
SPAN 7 - SPAN 11

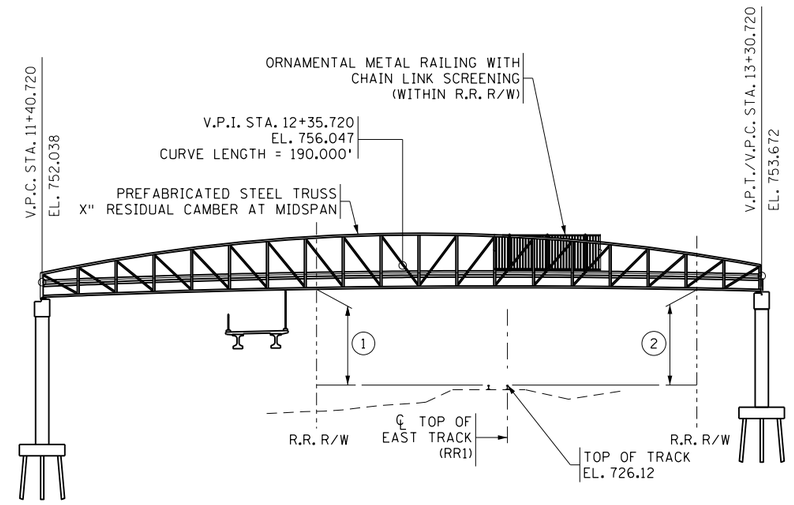

(1) CRITICAL VERTICAL CLEARANCE BETWEEN TOP OF TRACK (EL. 726.12) AND BOTTOM OF TRUSS AT WEST RAILROAD RIGHT OF WAY 24.03' (23.33' REQ'D)

(2) CRITICAL VERTICAL CLEARANCE BETWEEN TOP OF TRACK (EL. 726.12) AND BOTTOM OF TRUSS AT EAST RAILROAD RIGHT OF WAY 23.94' (23.33' REQ'D)

RAILROAD MINIMUM CONSTRUCTION CLEARANCE ENVELOPE

DESIGNED	DATE	REVISION DESCRIPTION	DR.	CHK.	APP'D.

BOLTON & MENK
7533 SUNWOOD DRIVE N.W.
RAMSEY, MINNESOTA 55303
Phone: (763) 433-2851
Email: Ramsey@bolton-menk.com
www.bolton-menk.com

TITLE: TYPICAL SECTIONS AND DETAILS

DESIGNED ATP	DRAWN JMR	APPROVED	
CHECKED RRE	CHECK RRE		

XXXXXXXXXX BRIDGE

SHEET NO. 6 OF 22 SHEETS

BRIDGE NO. XXXXX

H:\DACO\T44117934\CAD\MS\Prelim\Bridge\Sheets\cbrxxxxx_s12006.dgn bmi.tbl
Johnre pdf-B and W.pltcfg
12/18/2020 10:43:22 AM

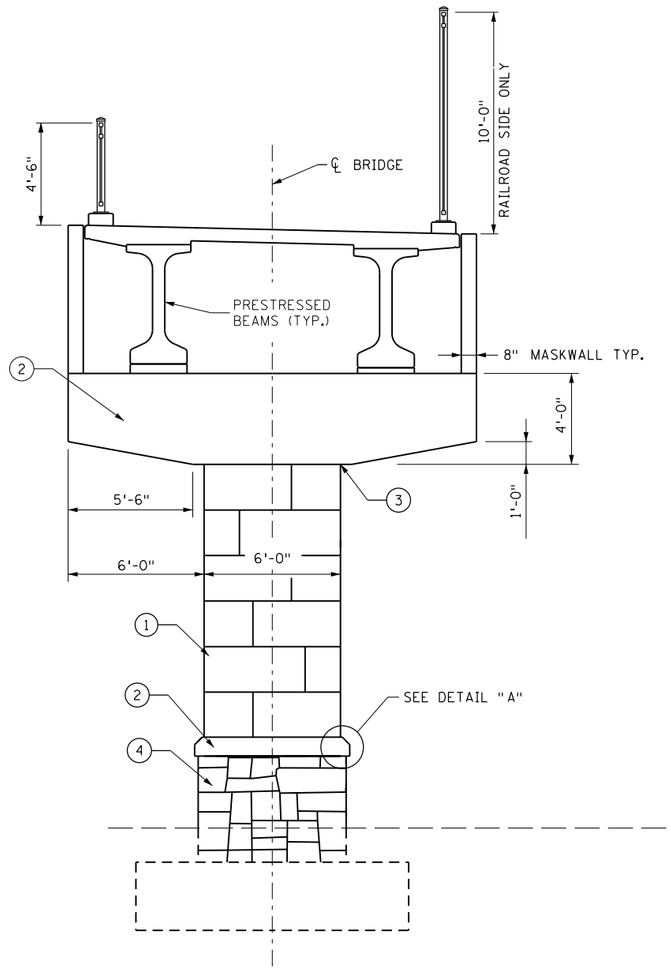

TYPICAL PIER ELEVATION

PIER 3 SHOWN OTHERS SIMILAR

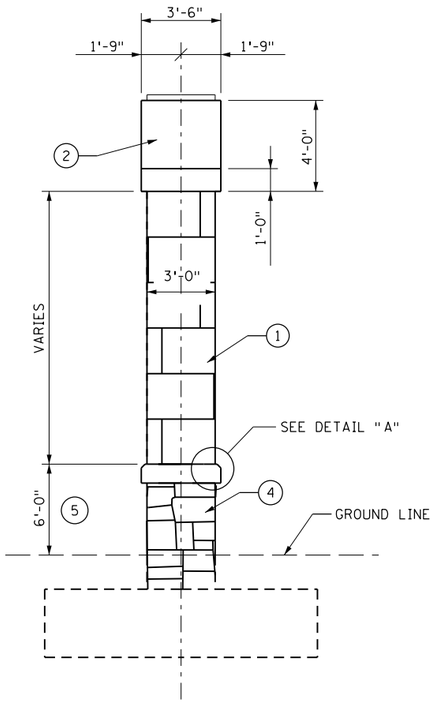

TYPICAL PIER END VIEW

PIER 3 SHOWN OTHERS SIMILAR

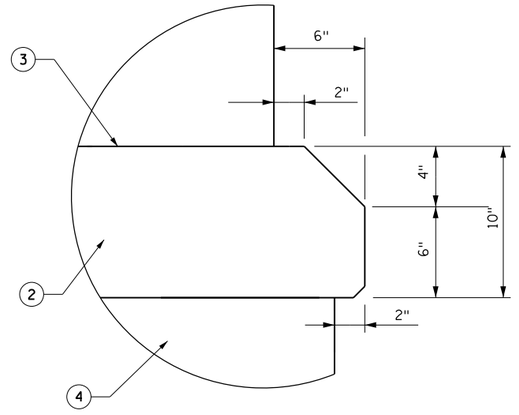

DETAIL "A"

NOTES:

APPLY 'SPECIAL SURFACE FINISH (COLOR 1)', IN ACCORDANCE WITH MNDOT SPEC 2401.3.F.2.C, TO THE FOLLOWING SURFACES:
1. ALL FACES OF BRIDGE PIERS ABOVE GROUND NOT RECEIVING ARCHITECTURAL TEXTURE & FINISH.
2. EXPOSED FACES OF BRIDGE ABUTMENTS, WINGWALLS, & RETAINING WALLS TO A DEPTH OF AT LEAST 1'-0" BELOW FINISHED GRADE (BACK FACE AND FRONT FACE).
3. TOP & SIDE FACES OF ALL CONCRETE CURBS.
4. EDGE OF BRIDGE DECK & BOTTOM OF BRIDGE DECK OVERHANGS.
5. ALL FACES OF CONCRETE PILASTERS.

APPLY 'SPECIAL SURFACE FINISH (COLOR 2)', IN ACCORDANCE WITH MNDOT SPEC 2401.3.F.2.C, TO THE FOLLOWING SURFACES:
1. ALL EXPOSED FACES OF PRESTRESSED CONCRETE BEAMS.

THE CONTRACT UNIT PRICE FOR THE RELEVANT CONCRETE BRIDGE CONSTRUCTION CONTRACT ITEM INCLUDES THE COST OF PROVIDING AND PLACING SPECIAL SURFACE FINISH (COLORS 1 & 2).

'ARCHITECTURAL SURFACE FINISH (SINGLE COLOR)' SHALL BE FEDERAL STANDARD 595C, COLOR NO. 33522 "LIGHT BUFF."
'SPECIAL SURFACE FINISH (COLOR 1)' SHALL BE FEDERAL STANDARD 595C, COLOR NO. 33522 "LIGHT BUFF."
'SPECIAL SURFACE FINISH (COLOR 2)' SHALL BE FEDERAL STANDARD 595C, COLOR NO. 26152 "MEDIUM GRAY."
ORNAMENTAL METAL RAILING SHALL BE FEDERAL STANDARD 595C, COLOR NO. 26152 "BLACK."

'ARCHITECTURAL CONCRETE TEXTURE (LIMESTONE)' SHALL MATCH CUSTOM ROCK PATTERN #11002 'WEATHERED LIMESTONE (24" COURSING)'

(1) +0": FRONT FACE OF FORMLINER
ARCHITECTURAL CONCRETE TEXTURE (LIMESTONE THIN BRICK)
ARCHITECTURAL SURFACE FINISH (MULTI-COLOR) AND
ANTI-GRAFITTI COATING.

(2) +3": SPECIAL SURFACE FINISH FRACTURED CAP.

(3) PERMISSIBLE CONSTRUCTION JOINT. LOCATE CONSTRUCTION JOINTS IN MORTAR LINE OF THE FORMLINER.

(4) +0": FRONT FACE OF FORMLINER
ARCHITECTURAL CONCRETE TEXTURE (ASHLAR STONE THIN BRICK)
ARCHITECTURAL SURFACE FINISH (SINGLE COLOR - COLOR XXX)
AND ANTI-GRAFITTI COATING.

(5) ONLY INCLUDE WHEN EXPOSED COLUMN HEIGHT EXCEEDS 12'-0".

DESIGNED	DATE	REVISION DESCRIPTION	DR.	CHK.	APP'D.

BOLTON & MENK
7533 SUNWOOD DRIVE N.W.
RAMSEY, MINNESOTA 55303
Phone: (763) 433-2851
Email: Ramsey@bolton-menk.com
www.bolton-menk.com

TITLE: AESTHETIC DETAILS

DESIGNED ATP	DRAWN JMR	APPROVED
CHECKED JJS	CHECK JJS	

XXXXXXXXXX BRIDGE

SHEET NO. 22 OF 22 SHEETS

BRIDGE NO. XXXXX

H:\DACO\T44117934\CAD\MS\Prelim\Bridge\Sheets\cbrxxxxx_s12007.dgn
johnre 12/18/2020 10:43:23 AM
pdf-B and W.pltcfg bmi.tbl

CONTRACTED PROFILE

SCALE : 0 50' 100' HORIZONTAL 0 5' 10' VERTICAL

PROFILE AT ℄ TRAIL (PROTRAIL)

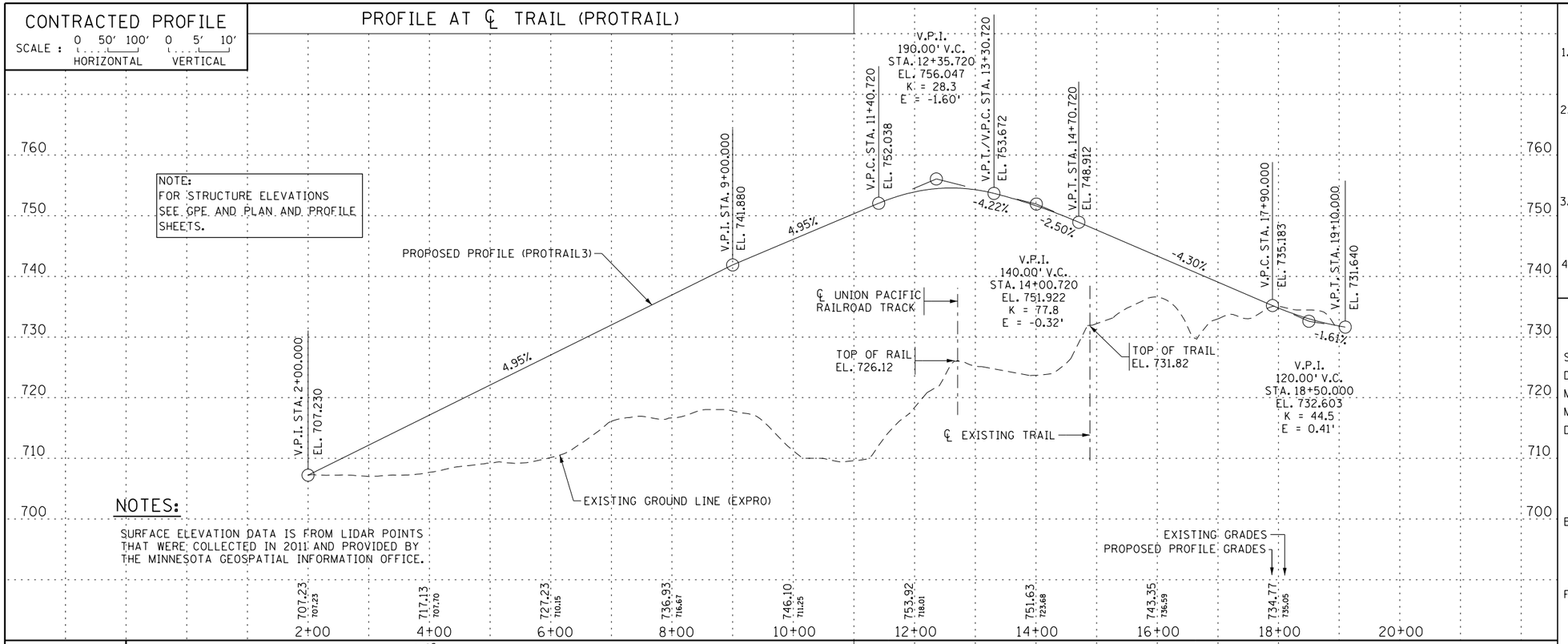

PLAT

SCALE: 0 50' 100'

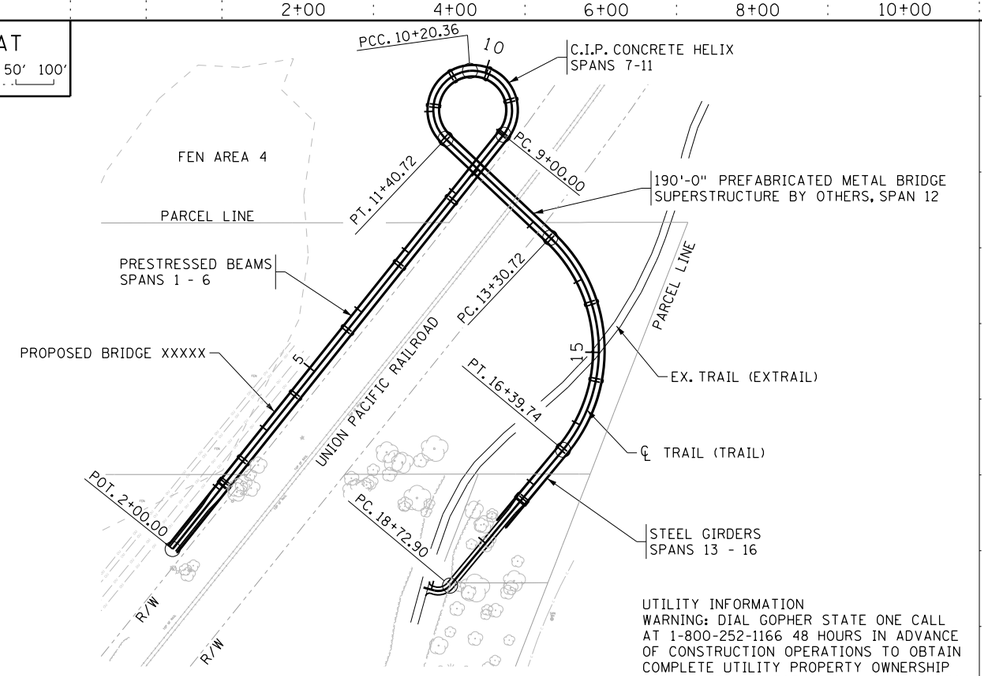

UTILITY INFORMATION
WARNING: DIAL GOPHER STATE ONE CALL AT 1-800-252-1166 48 HOURS IN ADVANCE OF CONSTRUCTION OPERATIONS TO OBTAIN COMPLETE UTILITY PROPERTY OWNERSHIP AND LOCATION INFORMATION. UTILITY INFO PRESENTED ON PLANS IS QUALITY LEVEL D. FIELD VERIFY ALL UTILITIES.

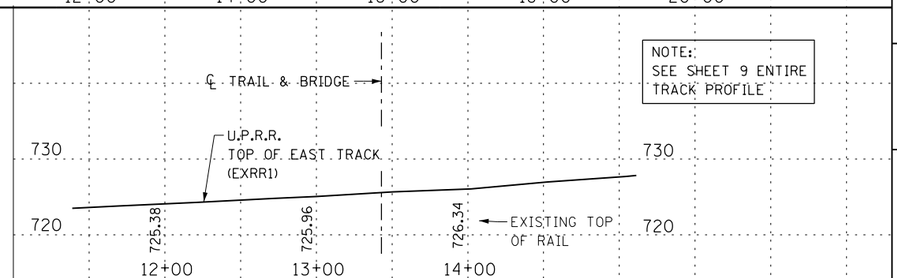

TOP EAST RAIL OF U.P.R.R.

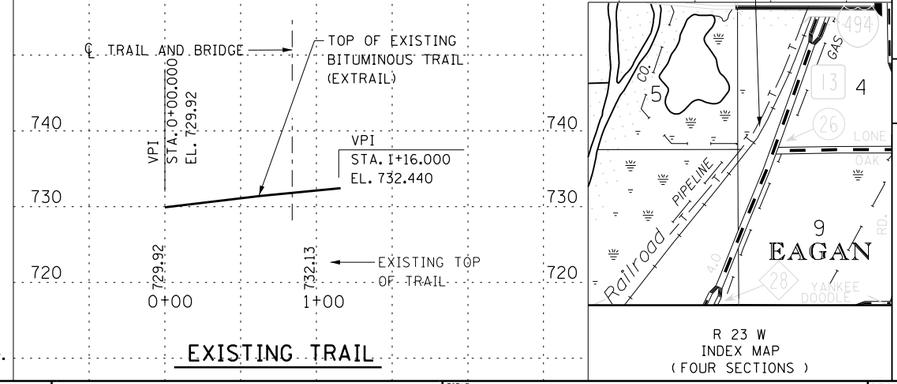

EXISTING TRAIL

PROPOSED BRIDGE NO. XXXXX

R 23 W
INDEX MAP
(FOUR SECTIONS)

LOCATION ENGINEER'S OBSERVATIONS AT BRIDGE SITE

1. SPECIAL FEATURES: WATERFALLS, DAMS, FLOODS, ICE, DEBRIS, SLIDING BANKS, RECREATIONAL BOATING.
2. OTHER BRIDGES OR CULVERTS OVER THE SAME STREAM (PARTICULARLY STRUCTURES WHICH CARRY HIGH WATER WITHOUT OVERFLOW OF ROADWAY): GIVEN LOCATION, TYPE, LENGTH, HEIGHT ABOVE HIGH WATER, CROSS-SECTIONAL AREA ETC.
3. APPARENT HIGHWATER ELEVATION OBTAINED FROM:
4. OTHER DATA: APPROX. VELOCITY OF WATER AT TIME OF SURVEY.

HYDRAULIC ENGINEERS RECOMMENDATION

DATE: XX-XX-XX

STREAM OR DITCH DESIGNATION: CENTER CREEK
DRAINAGE AREA: XX.X SQ. MI.
MAX. FLOOD ON RECORD: XXX C.F.S. UNK
MAXIMUM OBSERVED HIGHWATER ELEVATION: UNK FT.
DESIGN FLOOD (10 YR. FREQ.): XXX C.F.S.
HEADWATER ELEVATION: XXXX.XX
DESIGN MEAN VELOCITY THROUGH STRUCTURE: X.X F.P.S.
TOTAL STAGE INCREASE: X.X FT.
LOW MEMBER AT OR ABOVE ELEVATION: XXXX.X
BASIC FLOOD (100 YR. FREQ.): XXXX C.F.S.
HEADWATER ELEVATION: XXXX.X
TOTAL STAGE INCREASE: X.X FT.
MEAN VELOCITY THROUGH STRUCTURE: X.X F.P.S.
FLOWLINE ELEVATION: XXXX.X SKEW ANGLE: X°

SCOUR CONFIRMATION RECOMMENDATION

DATE: XX-XX-XX

TOTAL SCOUR AT PIER EL. XXX.XX (500 OR OT YR. FREQ.)
SCOUR CODE: OBTAIN FROM HYDRAULIC ENGINEER

BRIDGE SURVEY SHEETS MADE FROM :

FILES:
JOB34.GPK, CBRXXXXX AL200.DGN , CBRXXXXX GM.DGN , CBRXXXXX PR.DGN , CBRXXXXX TOPO.DGN , CBRXXXXX_PARCEL.DGN , CBRXXXXX_PRW.DGN

BENCH MARK ELEVATION XXX.XXX (NAVD88)
XXXXXXXXXXXXXXXXXXXXXXXXXXXXXXXXXXXXXXX
XXXXXXXXXXXXXXXXXXXXXXXXXXXXXXXXXXXXXXX
XXXXXXXXXXXXXXXXXXX.

MINNESOTA DEPARTMENT OF TRANSPORTATION

BRIDGE SURVEY

LOCATED IN THE CITY OF EAGAN MN.
3.03 MILES NORTH FROM THE INTERSECTION
OF CEDAR AVE. AND THE UNION PACIFIC R.R. ALONG THE TRACKS
240'-8⅝" CONCRETE HELEX , 180'-0" STEEL TRUSS SPAN
5 - 110'-0" , 1 - 40'-0" PRESTRESSED BEAM SPANS
3 - 103'-0" , 1 - 85'-0" STEEL GIRDER SPANS

IDENTIFICATION NO. XXX

SEC. 4 T 27 N R 23 W
CITY OF EAGAN DAKOTA COUNTY

DESIGNED	DATE	REVISION DESCRIPTION	DR.	CHK.	APP'D.

BOLTON & MENK
7533 SUNWOOD DRIVE N.W.
RAMSEY, MINNESOTA 55303
Phone: (763) 433-2851
Email: Ramsey@bolton-menk.com
www.bolton-menk.com

TITLE: BRIDGE SURVEY

DESIGNED ATP	DRAWN JMR	APPROVED
CHECKED JJS	CHECK JJS	

XXXXXXXXXX BRIDGE

SHEET NO. 7 OF 22 SHEETS

BRIDGE NO. XXXXX

H:\DACO\T44117934\CAD\MS\Prelim\Bridge\Sheets\cbrxxxxx_sur1.dgn bmi.tbl
Johnre pdf-B and W.pltcfg 10:43:37 AM
12/18/2020

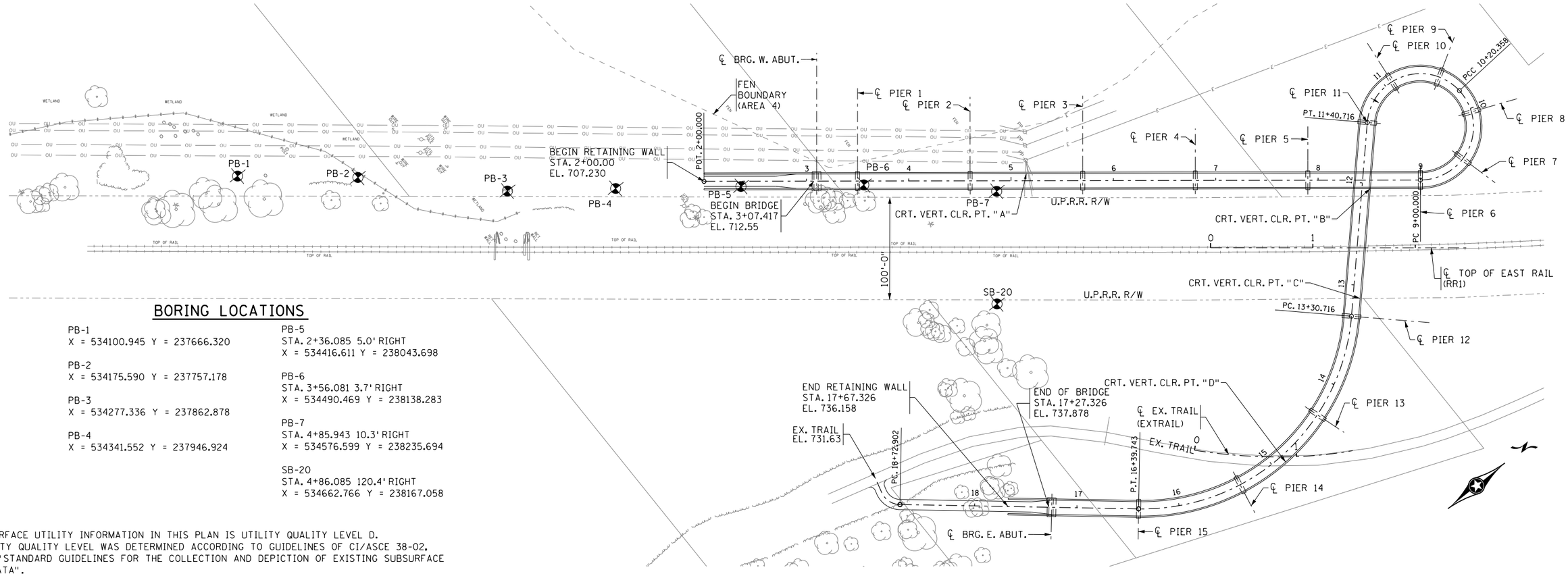

BORING LOCATIONS

PB-1
X = 534100.945 Y = 237666.320

PB-2
X = 534175.590 Y = 237757.178

PB-3
X = 534277.336 Y = 237862.878

PB-4
X = 534341.552 Y = 237946.924

PB-5
STA. 2+36.085 5.0' RIGHT
X = 534416.611 Y = 238043.698

PB-6
STA. 3+56.081 3.7' RIGHT
X = 534490.469 Y = 238138.283

PB-7
STA. 4+85.943 10.3' RIGHT
X = 534576.599 Y = 238235.694

SB-20
STA. 4+86.085 120.4' RIGHT
X = 534662.766 Y = 238167.058

THE SUBSURFACE UTILITY INFORMATION IN THIS PLAN IS UTILITY QUALITY LEVEL D.
THIS UTILITY QUALITY LEVEL WAS DETERMINED ACCORDING TO GUIDELINES OF CI/ASCE 38-02, ENTITLED "STANDARD GUIDELINES FOR THE COLLECTION AND DEPICTION OF EXISTING SUBSURFACE UTILITY DATA".

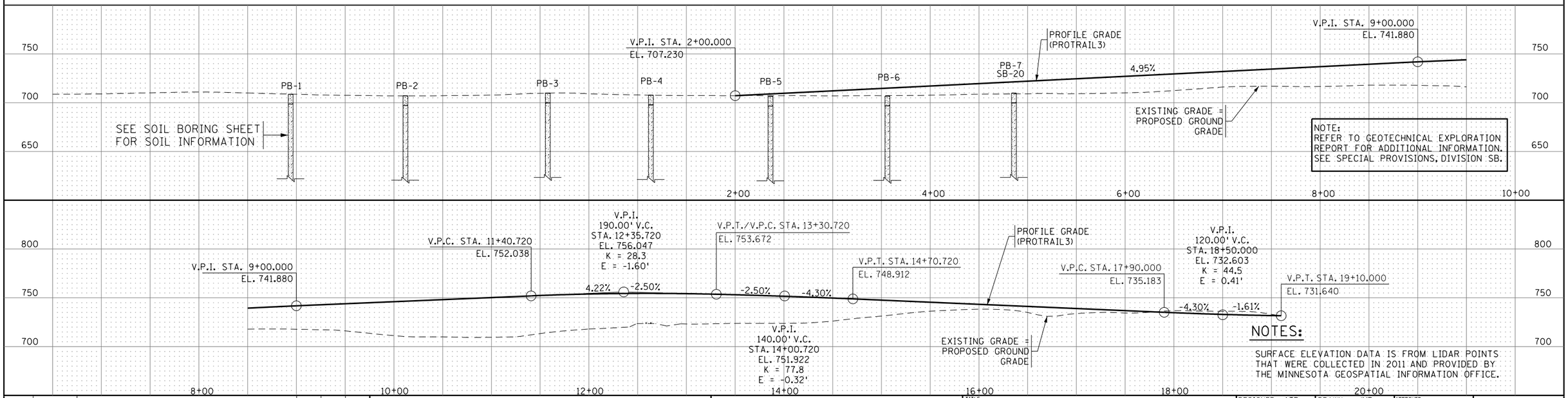

DESIGNED	DATE	REVISION DESCRIPTION	DR.	CHK.	APP'D.

BOLTON & MENK
7533 SUNWOOD DRIVE N.W.
RAMSEY, MINNESOTA 55303
Phone: (763) 433-2851
Email: Ramsey@bolton-menk.com
www.bolton-menk.com

TITLE:
BRIDGE SURVEY PLAN AND PROFILE

DESIGNED ATP	DRAWN JMR	APPROVED	
CHECKED JJS	CHECK JJS		

XXXXXXXXXX BRIDGE

SHEET NO. 8 OF 22 SHEETS

BRIDGE NO. XXXXX

H:\DACO\T44117934\CAD\MS\Prelim\Bridge\Sheets\cbrxxxxx_sur2.dgn bmi.tbl
Johnre 12/18/2020 10:43:41 AM pdf-B and W.pltcfg






UNION PACIFIC





Appendix D

Potentially Contaminated Properties Supporting Documentation

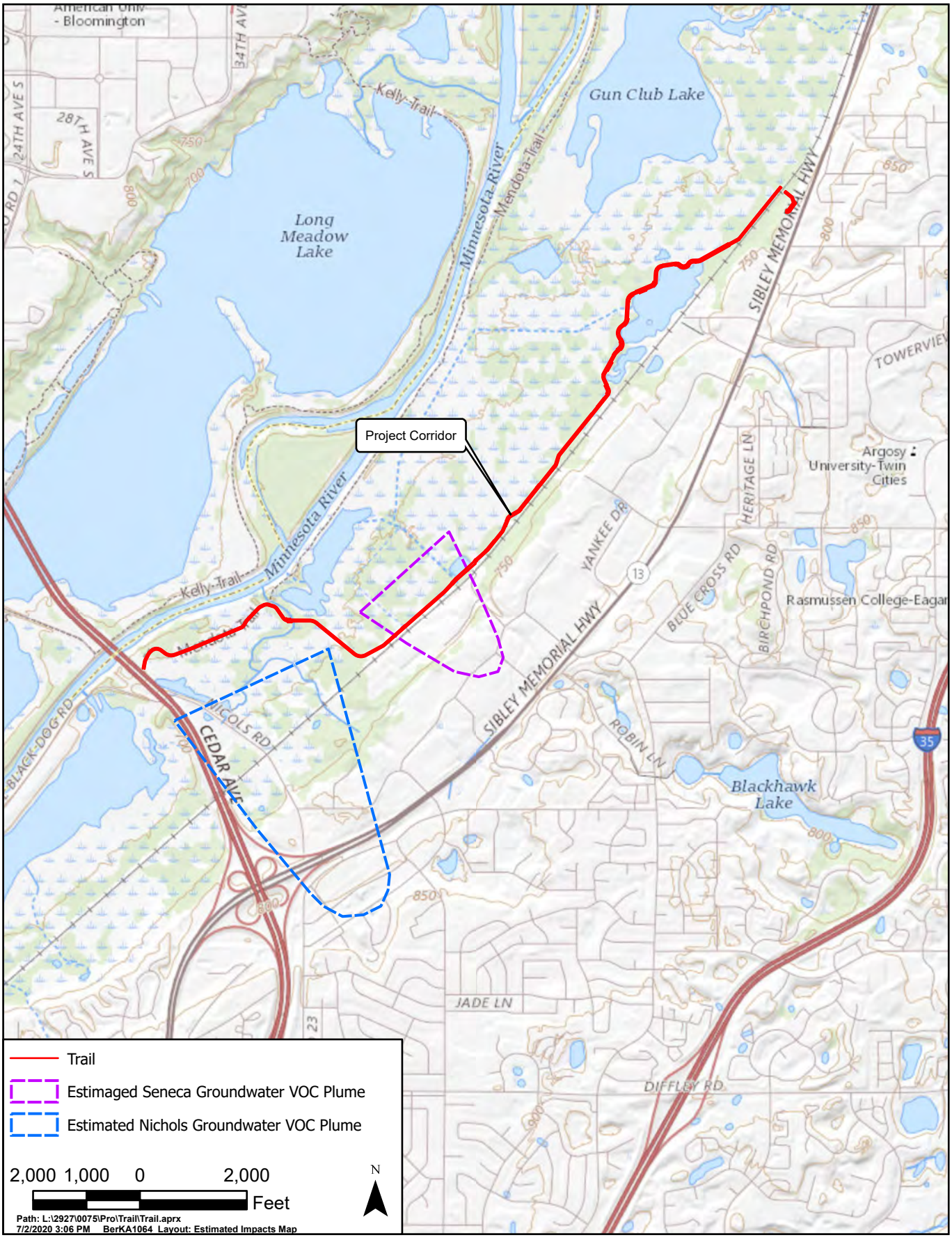

NORTHERN TECHNOLOGIES	WENCK Responsive partner. Exceptional outcomes.	JUL 2020
Estimated Impacts Map		Figure 3

Building a Better World for All of Us®

MEMORANDUM

TO: Josh Kinney, PLA, ASLA

FROM: Allen Sunderman (MN)

DATE: December 4, 2020

RE: Minnesota River Greenway - Fort Snelling Segment
Environmental File Review
Eagan, Minnesota
SEH No. DAKOT 155280

Short Elliott Hendrickson Inc. (SEH©) was retained by Dakota County to complete an Environmental File Review to identify potential environmental conditions in preparation for the Minnesota River Greenway – Fort Snelling Segment project located in Eagan, Minnesota.

The project is a 3.4-mile trail located within a portion of the Minnesota River Greenway – Segment 2, that extends from County State Aid Highway (CSAH) 26/Lone Oak Road to TH 77/Cedar Avenue North. Most of the alignment is located north of the Union Pacific Railroad, within the Fort Snelling State Park. The proposed trail will cross the Union Pacific Railroad at the north extend of the alignment and be constructed as either a bituminous surface or a boardwalk over the existing wetland areas.

SEH reviewed available information provided by Dakota County and Minnesota Pollution Control Agency (MPCA) regulatory files for the project. A summary of the files reviewed is included below. The sites are depicted on **Figure 1.**

Records Review

The following records were received from the MPCA and reviewed.

- Met Council – Seneca WWTP, Leak LS0002352
- Met Council – Seneca WWTP, Solid Waste SW-198
- Olson Concrete and Masonry, (VIC) VP14700
- Dakota County Bike Trail, LS0020687

The following records were received from Dakota County and were reviewed.

- Limited Phase I Environmental Site Assessment – Fort Snelling Greenway Trail

Copies of the reviewed files are attached electronically

File Review Information

LS0002352 – Seneca Wastewater Treatment Plant

On December 8th, 1989, a leak of fuel oil and diesel was reported to the MPCA during the removal of two underground storage tanks (USTs) at the Seneca Wastewater Treatment Plant (WWTP). Upon removal, petroleum impacted soils were encountered in the tank basin. It was determined the tanks were good condition and the release was associated with the piping. Approximately 60 cubic yards of impacted soil was stockpiled on-site. Laboratory analysis of the soil reported contamination consisting of total hydrocarbons as fuel oil #2 (up to 28 mg/kg). In March of 1990, Nova Environmental completed a site investigation, including five soil borings advanced to maximum depths ranging between 13.5 to 24 feet bgs. The soils encountered in the borings consisted of sand and gravel with some silt and black peat with roots and shells. No groundwater was encountered in the borings. Elevated PID headspace readings (up to 9.0 ppm) were encountered. Low-level concentrations of Benzene (up to 0.013ppm) were reported in the borings at 18-20 feet bgs. The stockpiled material was treated via thermal methods. The MPCA issued a site closure in November 1990.

SW-198 – Seneca Landfill

An area located south of the intersection of Blackhawk Road and Kennebec Drive in Eagan, Minnesota was used as storage for incinerated sewage sludge and ash. As of 1985, 85,000 cubic yards of material were stored at the facility. In January of 1985, MPCA issued a permit to allow for the storage of an additional 52,000 cubic yards of incinerator ash and cover material to be stored on site. Four ground water wells were installed at this time to be sampled three times a year. MPCA issued a close order of the site with a post-closure plan for the next thirty years. The plan included required site soil inspections three times a year and sampling of groundwater four times a year. The water samples were analyzed for: water depth, temperature, field/lab pH, Field conductivity, lab conductivity, alkalinity, dissolved particles (Ca, Mg, Cl, SO4, K, Na, Al, As, Ba, Cd, Cr, Cu, Fe, Pb, Ni, Se, Ag, and Zn) as well as any color or odors detected in the field. In the second quarter of 2004 3686.7 pounds (approximately 3025 cubic yards) of ash were removed from site for recycling purposes. In 2010 from April to June, 5819.6 cubic yards of ash were removed from site. Two additional wells were installed in November of 2006, to depths of 32 and 43 feet bgs. Site monitoring post-closure continues until 2026.

VP14700 – Olson Concrete and Masonry

From 1976 to1994 the site was used as a sand and gravel mine, City of Eagan Police Department firing range, and equipment/material storage for Olson Concrete and Masonry. A Phase I investigation completed by Braun in January of 2000, detailed several possible contamination sources including: uncontrolled storage of 55-gallon barrels, uncontrolled dumping in-situ, lead shot from firing range activities, and potential ground water contamination related to plumes from upgradient sites. Approximately 6,020 pounds of Lead shot from the firing range was screened and removed from the site. All soils from the firing range area had low- level concentrations lead and were determined to be non-contaminated. A Phase II Investigation completed in In November of 2001, included thirteen test pits and nine test trenches ranging from 6 to13 feet below ground surface (bgs). Eight soil samples were taken from the excavations. The soils encountered in the excavations consisted predominantly of native sands, clays, gravels, and cobbles. Debris found in the test pits and trenches near surface level (0-3 feet bgs) consisted of used tires, asphalt, and concrete materials. Soil contamination consisted of DRO (up to 14.0 mg/kg) and 4-Chloro-3-Methlyphenol (up to 0.15 mg/kg). Low-level concentrations of heavy metals (Hg, Ba, Cr, and Pb) were detected and were assumed to be naturally occurring. In the same Phase II investigation six borings were done to collect groundwater samples that ranged from 5 to 30 feet bgs. Groundwater was encountered at maximum depths ranging between 16 and 18 feet bgs. Low-level petroleum contamination was encountered in the groundwater was below state drinking water standards and included DRO (up to 24ug/l). In November of 2001, the 55-gallon barrels that were observed on site during the Phase I, a majority of which were empty, were crushed and removed from site. Six barrels were removed from site as hazardous materials (1 containing lead, 1 petroleum distillate flammable waste, and 4 petroleum distillate combustible waste). The only remaining source of

potential contamination is a groundwater well reportedly located near the old gravel pit. The well was not found during investigation. In 2004 the MPCA issued site closure.

LS0020678 – Dakota County Bike Trail

In April of 2018, a release of 100 gallons of fuel occurred from a 575 gallon UST, during grading activities for proposed trail construction. In June of 2018 the UST was removed. Elevated headspace readings (up to 187 ppm) were encountered during the tank removal. Soil analytical results reported exceedances of DRO (up to 4,560 mg/kg). Detections of volatile organic compounds (VOCs) were reported below regulatory limits. In April of 2020, a limited site investigation consisting of five soil borings were advanced around the former UST location. The soil borings extended to maximum depths ranging between 20 and 25 feet bgs. Soils encountered consisted of sand, silty sand, and clayey sand fill ranging in depth between 8 and 13 feet bgs. Native soils encountered generally consisted of clayey sand till to the termination depth of the borings. Groundwater was not encountered during the site investigation. No elevated PID headspace readings were encountered during the soil boring operations. Analytical analysis of soils samples reported no detection of petroleum-based compounds. However, visual indications of petroleum contamination was observed in the boring located within the former tank basin at 2.5 to 4 feet bgs. No cleanup measures were indicated within the file review documents. In September of 2020, the MPCA issued site closure with the following statement included: “If future development of this property or the surrounding area is planned, it should be assumed that petroleum contamination may still be present. If petroleum contamination is encountered during future development work, the MPCA should be notified immediately”.

Limited Phase I Environmental Site Assessment – Fort Snelling Greenway Trail

In August of 2020 Wenck Associates, Inc. completed a Phase I Environmental Site Assessment (ESA) for the proposed Minnesota River Greenway – Fort Snelling Segment. The Phase I ESA described historical use of the corridor as unimproved land and wetland through the early 1950s when the western portion of the corridor was used for agricultural purposes. A gravel pit was described within the eastern portion of the proposed alignment in the late 1950s. Commercial development began south of the railroad tracks in the late 1960s, and the existing Seneca Wastewater Treatment Plant was constructed in the 1970s. Intermittent flooding is described throughout the historical use of the project corridor. Three RECs were listed for the project area including the Nichols groundwater VOC plume, the Seneca groundwater VOC plume, and the Seneca Ash Landfill. The Nichols groundwater VOC plume consists of concentrations of PCE, 1,1,1-TCA, dioctyl phthalate that originated from Instant Testing located south of Cedar Avenue and Sibley Memorial Highway. The Seneca groundwater VOC plume consists of concentrations of chloride and TCE originating from Finishing Equipment located at 3640 Kennebec Drive.

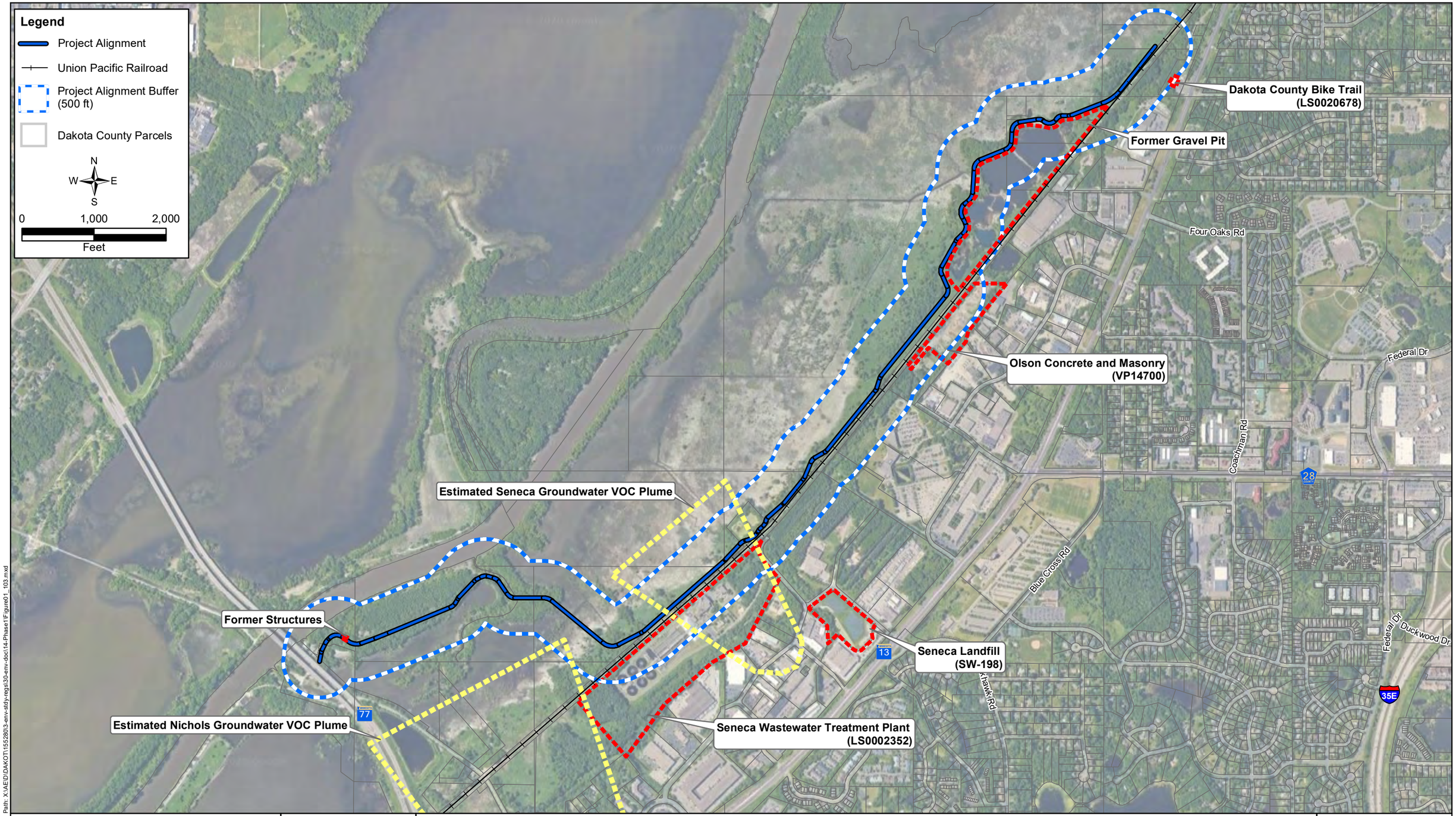

Path: X:\AE\D\DAKOT\155280\3-env-stdy-regl\30-env-dos\14-Phase1Figure01_103.mxd

SEH
3535 VADNAIS CENTER DR.
ST. PAUL, MN 55110
PHONE: (651) 490-2000
FAX: (888) 908-8166
TF: (800) 325-2055
www.sehinc.com

Project: DAKOT 155280
Print Date: 11/25/2020

User Name: rhawkins
Projection: NAD 1983 UTM Zone 15N
Source: SEH Digi, ESRI, MPCA, Wenck

Project Features

Minnesota River Greenway - Fort Snelling Segment
Eagan, Minnesota

Figure 1

This map is neither a legally recorded map nor a survey map and is not intended to be used as one. This map is a compilation of records, information, and data gathered from various sources listed on this map and is to be used for reference purposes only. SEH does not warrant that the Geographic Information System (GIS) Data used to prepare this map are error free, and SEH does not represent that the GIS Data can be used for navigational, tracking, or any other purpose requiring exacting measurement of distance or direction or precision in the depiction of geographic features. The user of this map acknowledges that SEH shall not be liable for any damages which arise out of the user's access or use of data provided.

Appendix E

State Threatened and Endangered Species Correspondence and Supporting Documentation

DEPARTMENT OF NATURAL RESOURCES

Minnesota Department of Natural Resources
Division of Ecological & Water Resources
500 Lafayette Road, Box 25
St. Paul, MN 55155-4025

August 21, 2019
Correspondence # ERDB 20140399-0003

Ms. Gina Aulwes
Bolton & Menk, Inc.
12224 Nicollet Avenue S
Burnsville, MN 55337-1649

RE: Natural Heritage Review of the proposed Minnesota River Greenway - Fort Snelling Segment,
T27N R23W Section 4,8,9,13,17, & 18; Dakota County

Dear Ms. Aulwes,

As requested, the Minnesota Natural Heritage Information System has been queried to determine if any rare species or other significant natural features are known to occur within an approximate one-mile radius of the proposed project. Based on this query, rare features have been documented within the search area (for details, please visit the Rare Species Guide Website for more information on the biology, habitat use, and conservation measures of these rare species). Please note that the following rare features may be adversely affected by the proposed project:

Ecologically Significant Areas

- The proposed trail crosses and is adjacent to multiple native plant communities. A native plant community is a group of native plants that interact with each other and with their environment in ways not greatly altered by modern human activity or by introduced organisms. Native plant communities are classified and described by considering vegetation, hydrology, landforms, soils, and natural disturbance regimes. (GIS shapefiles of DNR Native Plant Communities can be downloaded from the MN Geospatial Commons. Please contact me if you do not have access to the appropriate mapping services.) The proposed trail crosses through the following native plant communities:
    - Southern Terrace Forest
    - Bulrush Marsh (Northern)
    - Calcareous Fen (Southeastern)

  Actions to minimize disturbance to these communities may include, but are not limited to, the following recommendations:
    - Minimize width of trail;
    - As much as possible, operate within already-disturbed areas;
    - Do not route trails through wet swales or depressions;

- Bridge all stream and wetland crossings;
- Minimize vehicular disturbance in the area (allow only vehicles/equipment necessary for construction activities);
- Do not park equipment or stockpile supplies in the area;
- Do not place spoil within the area;
- Use effective erosion prevention and sediment control measures;
- Inspect and clean all equipment prior to bringing it to the site to prevent the introduction and spread of invasive species;
- Trail maintenance plans should address erodible soils;
- Use signage to encourage visitors to stay on designated trails;
- Revegetate disturbed soil with native species suitable to the local habitat as soon after construction as possible; and
- Use only weed-free mulches, topsoils, and seed mixes.

If the Wetland Conservation Act (WCA) is applicable to this project, please note that one or more of the above native plant communities may qualify as a "rare natural community" under this Act. Minnesota Rules, part 8420.0515, subpart 3 states that a wetland replacement plan for activities that modify a rare natural community must be denied if the local government unit determines the proposed activities will permanently adversely affect the natural community.

- Multiple calcareous fens have been documented in the vicinity of the proposed project. A calcareous fen is a rare and distinctive peat-accumulating wetland that is legally protected in Minnesota. The Wetlands Conservation Act, authorized by *Minnesota Statutes*, section 103G.223, states that calcareous fens may not be filled, drained, or otherwise degraded, wholly or partially, by any activity, except as provided for in a management plan approved by the commissioner of the Department of Natural Resources. Many of the unique characteristics of calcareous fens result from the upwelling of groundwater through calcareous substrates. Because of this dependence on groundwater hydrology, calcareous fens can be affected by nearby activities or even those several miles away. For more information regarding calcareous fens, please see the Calcareous Fen Fact Sheet. The following fens have been documented within a mile of the project:

  Nicols Meadow Fens (ID# 243, 20942 & 20943) contains the following state-listed plants:
  - Sterile sedge (Carex sterilis) – Threatened
  - Tuberous Indian-plantain (Arnoglossum plantagineum) – Threatened
  - Edible valerian (Valeriana edulis var. ciliate) – Threatened
  - Whorled nutrush (Scleria verticillata) – Threatened
  - Hair-like beak rush (Rhynchospora capillacea) – Threatened
  - Stream parsnip (Berula erecta) – Threatened
  - Twig rush (Cladium mariscoides) – Special Concern
  - Small white lady's-slipper (Cypripedium candidum) – Special Concern

  Gun Club Lake South Fen (ID# 244) contains the following state-listed species:
  - Sterile sedge (Carex sterilis) – Threatened
  - Edible valerian (Valeriana edulis var. ciliate) – Threatened
  - Small white lady's-slipper (Cypripedium candidum) – Special Concern

Black Dog Lake North Fen (ID# 16550) contains the following state-listed species:

- Sterile sedge (*Carex sterilis*) – Threatened
- Edible valerian (*Valeriana edulis* var. *ciliate*) – Threatened

The DNR would have concerns regarding any activities that might affect groundwater flows, including groundwater pumping or discharge. **Provided the proposed project will not alter the hydrological conditions in the surrounding area, we do not have any concerns.** If this is not the case, or if you have any questions regarding calcareous fen regulations, please contact Doug Norris, Wetlands Program Coordinator, at 651-259-5125 or Doug.Norris@state.mn.us.

If it is determined that the project will adversely affect the fens in any way, including indirect impacts through the alteration of hydrological conditions, you will need to contact Lisa Joyal, the Endangered Species Environmental Review Coordinator, at lisa.joyal@state.mn.us or 651-259-5109 before the project is initiated to discuss rare species survey process (see attached). Surveys must follow the standards contained in the attached Rare Species Survey Process and Rare Plant Guidance. Project planning should take into account that any botanical survey needs to be conducted during the appropriate time of the year, which may be limited.

State-listed Species

- Blanding's turtles (*Emydoidea blandingii*), a state-listed threatened species, have been documented in the vicinity of the proposed project. Blanding's turtles use upland areas up to and over a mile distant from wetlands, waterbodies, and watercourses. Uplands are used for nesting, basking, periods of dormancy, and traveling between wetlands. Factors believed to contribute to the decline of this species include collisions with vehicles, wetland drainage and degradation, and the development of upland habitat. Any added mortality can be detrimental to populations of Blanding's turtles, as these turtles have a low reproduction rate that depends upon a high survival rate to maintain population levels.

  This project has the potential to impact this rare turtle through direct fatalities and habitat disturbance/destruction due to excavation, fill, and other construction activities associated with the project. Minnesota's Endangered Species Statute (*Minnesota Statutes*, section 84.0895) and associated Rules (*Minnesota Rules*, part 6212.1800 to 6212.2300 and 6134) prohibit the take of threatened or endangered species without a permit. As such, **the following avoidance measures are required**:

  - Avoid wetland impacts during hibernation season, between October 15th and April 15th, unless the area is unsuitable for hibernation (less than 14 inches deep);
  - Timing of dewatering in areas 14 inches or deeper must take place between May 15th and September 15th;
  - Use of erosion control blanket shall be limited to 'bio-netting' or 'naturalnetting' types, and specifically not products containing plastic mesh netting or other plastic components. Also be aware that hydro-mulch products may contain small synthetic (plastic) fibers to aid in its matrix strength. These loose fibers could potentially re-suspend and make their way into Public Waters. As such, please review mulch products and not allow any materials with synthetic (plastic) fiber additives in areas that drain to Public Waters;

- Culverts need to be 36 inches or greater in diameter, at least twice as wide as the normal width of open water, and have an elliptical or flat-bottom;
- Monitor for turtles during construction and report any sightings to the DNR Regional Nongame Specialist, Michael Worland at 320-234-2550 or Michael.Worland@state.mn.us;
- Blanding's turtle flyer should be given to all contractors working in the area;

If the above avoidance measures are not possible, please contact me as further review will be needed.

For additional information, please see the Blanding's turtle fact sheet, which describes the habitat use and life history of this species. The fact sheet also provides two lists of recommendations for avoiding and minimizing impacts to this rare turtle. **Please refer to the both lists of recommendations for your project.** For further assistance regarding the Blanding's turtle, please contact the DNR Regional Nongame Specialist.

- Several state-listed fish and mussels have been documented in the Minnesota River in the vicinity of the proposed project. These species are particularly vulnerable to deterioration in water quality, especially increased siltation. As such, effective erosion prevention and sediment control practices must be implemented and maintained near the river and near any stream that flows into the river.

- The Bell's vireo, (*Vireo bellii*), a state-listed bird species of special concern, has been documented in the vicinity of the project. In Minnesota, Bell's vireo prefers shrub thickets within or bordering open habitats such as grasslands or wetlands. This bird suspends its nests from forks of low branches of small trees or shrubs. If feasible, avoid tree & shrub removal from May 15th through August 15th to avoid disturbance of nesting birds.

Federally Protected Species

- Northern long-eared bat (*Myotis septentrionalis*), federally listed as threatened and state-listed as special concern, little brown bat (*Myotis lucifugus*) and big brown bat (*Eptesicus fuscus*), both also state-listed as special concern, have been documented in the vicinity of the proposed project. During the winter these species typically hibernate in caves and mines. During the active season (approximately April-October) they roost underneath bark, in cavities, or in crevices of both live and dead trees; and in human structures such as buildings and bridges. Pup rearing is during June and July. Activities that may impact this species include, but are not limited to, wind farm operation, any disturbance to hibernacula, and destruction/degradation of habitat. As such, we recommend avoiding tree removal during pup rearing season, June 1st though July 31st.

  Regarding the northern long-eared bat, the U.S. Fish and Wildlife Service (USFWS) has published a final 4(d) rule that identifies prohibited take. To determine whether you need to contact the USFWS, please refer to the USFWS Key to the Northern Long-Eared Bat 4(d) Rule (see links below). **Please note there is a known roost area approximately 160 feet from the trail.**

Environmental Review and Permitting

- Please include a copy of this letter in any state or local license or permit application. Please note that measures to avoid or minimize disturbance to the above rare features may be included as restrictions or conditions in any required permits or licenses.

The Natural Heritage Information System (NHIS), a collection of databases that contains information about Minnesota's rare natural features, is maintained by the Division of Ecological and Water Resources, Department of Natural Resources. The NHIS is continually updated as new information becomes available, and is the most complete source of data on Minnesota's rare or otherwise significant species, native plant communities, and other natural features. However, the NHIS is not an exhaustive inventory and thus does not represent all of the occurrences of rare features within the state. Therefore, ecologically significant features for which we have no records may exist within the project area. If additional information becomes available regarding rare features in the vicinity of the project, further review may be necessary.

For environmental review purposes, the results of this Natural Heritage Review are valid for one year; the results are only valid for the project location (noted above) and the project description provided on the NHIS Data Request Form. Please contact me if project details change or for an updated review if construction has not occurred within one year.

The Natural Heritage Review does not constitute review or approval by the Department of Natural Resources as a whole. Instead, it identifies issues regarding known occurrences of rare features and potential effects to these rare features. If needed, please contact your DNR Regional Environmental Assessment Ecologist to determine whether there are other natural resource concerns associated with the proposed project. Please be aware that additional site assessments or review may be required.

Thank you for consulting us on this matter, and for your interest in preserving Minnesota's rare natural resources. An invoice will be mailed to you under separate cover.

Sincerely,



Samantha Bump
Natural Heritage Review Specialist
Samantha.Bump@state.mn.us

Enc. Rare Species Survey Protocol

Links: Rare Species Guide
http://www.dnr.state.mn.us/rsg/index.html
DNR Regional Environmental Assessment Ecologist Contact Info
http://www.dnr.state.mn.us/eco/ereview/erp_regioncontacts.html
MBS Sites of Biodiversity Significance
http://www.dnr.state.mn.us/eco/mcbs/biodiversity_guidelines.html

DNR Native Plant Communities
http://www.dnr.state.mn.us/npc/index.html
MN Geospatial Commons
https://gisdata.mn.gov/
BWSR Native Vegetation/Seed Mixes
http://www.bwsr.state.mn.us/native_vegetation/
Calcareous Fen Fact Sheet
https://files.dnr.state.mn.us/natural_resources/water/wetlands/calcareous_fen_fact_sheet.pdf
Blanding's Turtle Fact Sheet
http://files.dnr.state.mn.us/natural_resources/animals/reptiles_amphibians/turtles/blandings_turtle/factsheet.pdf
Blanding's Turtle Flyer
http://files.dnr.state.mn.us/natural_resources/animals/reptiles_amphibians/turtles/blandings_turtle/flyer.pdf
Wildlife Friendly Erosion Control
http://files.dnr.state.mn.us/eco/nongame/wildlife-friendly-erosion-control.pdf

Cc: Becky Horton
Leslie Parris
Doug Norris
Mike Worland
Jennie Skancke
Kit Elstad-Haveles

From: Horton, Becky (DNR) <becky.horton@state.mn.us>
Sent: Thursday, March 4, 2021 11:37 AM
To: John Thayer <jthayer@sehinc.com>
Cc: Joyal, Lisa (DNR) <lisa.joyal@state.mn.us>; Skancke, Jennie (DNR) <jennie.skancke@state.mn.us>
Subject: FW: MN River Greenway - Dakota County - Rare Flora Survey Report

Hi John,

Thank you for submitting the attached survey report regarding the Minnesota River Greenway – Fort Snelling Project (ERDB 20140399). The report contains sufficient information to make a determination regarding impacts to state-listed species and no further surveys are requested. Given that the survey results were negative, impacts to state-listed species are not anticipated and a Permit to Take is not needed.

Please ensure that any concerns to impacts to calcareous fens are addressed with DNR Wetlands Coordinator, Jennie Skancke (jennie.skancke@state.mn.us).

Please let me know if you have any questions.

Thank you,

Becky

Rebecca Horton
Planner Principal| Division of Ecological and Water Resources

Minnesota Department of Natural Resources
500 Lafayette Road
St. Paul, MN 55155-4025
Phone: 651-259-5122
Email: becky.horton@state.mn.us
mndnr.gov





Building a Better World for All of Us®

MEMORANDUM

TO: Lisa Joyal, Endagered Species Review Coordinator

FROM: John Thayer, SEH Scientist

DATE: August 18, 2020

RE: Minnesota River Greenway - Fort Snelling Segment Project
SEH No. DAKOT 155280 14.00

Introduction
The purpose of this memorandum is to summarize the results of a state-listed species survey and habitat assessment for the proposed Minnesota River Greenway – Fort Snelling Segment Project located in the City of Eagan, Dakota County, Minnesota. The survey sought to document any occurrences of state-listed species, if observed, and identify potential habitat for state-listed species within the project area. **Figure 1** shows the project location and survey area.

The survey and this memorandum were completed by John Thayer (Scientist) and Rebecca Beduhn (Sr. Scientist). Mr. Thayer is a Minnesota Department of Natural Resources qualified surveyor for general plants, *Botrychium* spp., and lichens.

Background
As a part of the environmental review process for the proposed project, SEH staff submitted a Natural Heritage Information System (NHIS) Data Request. A response was received, under correspondence # ERDB 20140399-003, which recommended the completion of a botanical survey prior to construction activities. The response identified eight (8) target species: sterile sedge (*Carex sterilis*), tuberous indian-plantain (*Arnoglossum plantagineum*), edible valerian (*Valeriana edulis* var. *ciliate*), whorled nutrush (*Scleria verticillata*), hair-like beak rush (*Rhynchospora capillacea*), stream parsnip (*Berula erecta*), twig rush (*Cladium mariscoides*), and small white lady's slipper (*Cypripedium candidum*). A survey proposal was completed and submitted to NHIS staff on June 1, 2020 (**Attachment A**).

Field Methodology
An early-season field survey was conducted on June 30th, 2020 by John Thayer and Rebecca Beduhn. The site was revisited by John Thayer on August 6th, 2020 for a late-season field survey. A random meander methodology was utilized to cover as much of the survey area as possible. When unique and/or potential habitats were located, these habitats were thoroughly searched. Plant species encountered within the survey area were identified and recorded (**Attachment B**).

Results and Discussion
No state-listed species were observed in the course of the survey. The survey area was comprised of plant communities best classified as a degraded wet meadow/carr community and a southern floodplain forest (FFs68). Representative photos of the communities are included in **Attachment C**. The degraded wet meadow/carr community was primarily dominated by reed canary grass (*Phalaris arundinacea*) and stinging nettle (*Urtica dioica*). Two calciphile species were observed in this community: *Carex hystercina* and *Carex interior*, both of

which have a calciphile score of 5. However, these sedges were observed in separate areas within the survey corridor. The southern floodplain forest had a continuous canopy of silver maple (*Acer saccharinum*), green ash (*Fraxinus pennsylvanica*), and boxelder (*Acer negundo*) with a sparse subcanopy of green ash, American elm (*Ulmus americana*), boxelder, and silver maple. The shrub layer was absent. The ground layer included orange jewelweed (*Impatiens capensis*), Canadian wood nettle (*Laportea canadensis*), and stinging nettle (*Urtica dioica*).

Thank you for your review. If you have any questions regarding this request, please contact me at **218-241-1816** or **jthayer@sehinc.com**.

jt
Attachments:
Figure 1 – Project Location
Attachment A – NHIS Survey Proposal
Attachment B – Plant Species List
Attachment C – Photos

c: Toby Muse, SEH PE (MN)
Josh Kinney, Dakota County Senior Project Manager
x:\ae\d\dakot\155280\3-env-stdy-regs\30-env-doc\dakota-rare-flora\2020-06-rare-flora-survey-memo.docx



Legend

Survey Area

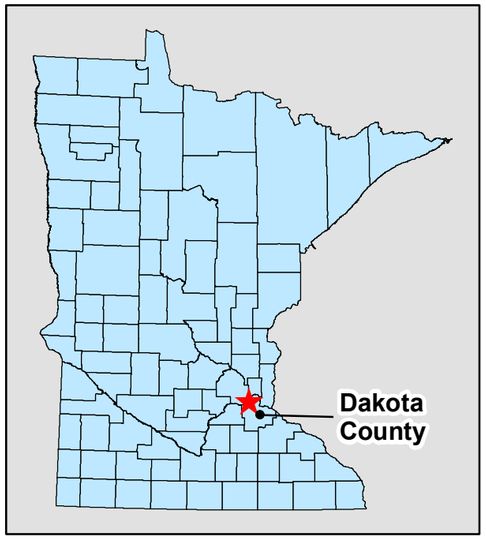

N

0 500 1,000 2,000 Feet

This map is neither a legally recorded map nor a survey map and is not intended to be used as one. This map is a compilation of records, information, and data gathered from various sources listed on this map and is to be used for reference purposes only. SEH does not warrant that the Geographic Information System (GIS) Data used to prepare this map are error free, and SEH does not represent that the GIS Data can be used for navigational, tracking, or any other purpose requiring exacting measurement of distance or direction or precision in the depiction of geographic features. The user of this map acknowledges that SEH shall not be liable for any damages which arise out of the user's access or use of data provided.

Path: X:\AE\D\DAKOT\155280\3-env-stdy-regs\30-env-doc\Dakota-Rare-Flora\Figure 1.mxd

SEH
3535 VADNAIS CENTER DR.
ST. PAUL, MN 55110
PHONE: (651) 490-2000
FAX: (651) 490-2150
WATTS: 800-325-2055
www.sehinc.com

Project: DAKOT 155280
Print Date: 8/21/2020

Map by: J. Thayer
Projection: UTM NAD 83
Source: ESRI, SEH, MNDNR
Background: 2019 Dakota Co.

Minnesota River Greenway – Fort Snelling Segment Project

City of Eagan, Dakota County, Minnesota

Site Location

Figure 1

Building a Better World
for All of Us®

MEMORANDUM

TO: Lisa Joyal, Natural Heritage Information System Data Distribution Coordinator & Endangered Species Environmental Review Coordinator

FROM: John Thayer, Scientist

DATE: May 14, 2020

RE: Minnesota River Greenway - Fort Snelling Segment
SEH No. 155280 14.00

The purpose of this memorandum is to present a proposal for a listed plant species survey for the Minnesota River Greenway – Fort Snelling Segment Project located in Dakota County, Minnesota (**Figure 1**). The proposed project consists of the construction of a 10 foot wide trail. The proposed survey will occur within a 25ft buffer around the trail alignment (**Figure 2**).

A NHIS data request was completed, and a response was received on August 21, 2019 under correspondence # ERDB 20140399-0003. This response identified eight (8) different plant species within one-mile of the project area: sterile sedge (*Carex sterilis*), tuberous indian-plantain (*Arnoglossum plantagineum*), edible valerian (*Valeriana edulis* var. *ciliate*), whorled nutrush (*Scleria verticillata*), hair-like beak rush (*Rhynchospora capillacea*), stream parsnip (*Berula erecta*), twig rush (*Cladium mariscoides*), and small white lady's slipper (*Cypripedium candidum*). Other species may also be present and will be investigated as part of a comprehensive field survey.

Based on the species listed above, SEH proposes an assessment in late June – early July of 2020 as the species listed above will be identifiable at this time. The assessment will include documenting plant species and classifying the area into Native Plant Community (NPC) types based on plant community composition and landscape features. All state- and/or federally-listed species observed within the project limits will be logged. SEH staff have a valid collections permit (#23228, **Attachment A**), should collection of any specimens be appropriate. In addition, listed occurrences will be photographed with reference to a measured scale, and the location will be recorded with a Trimble Geo XH handheld GPS unit capable of sub-meter accuracy.

SEH will compile a report summarizing methods, results, and photo-documentation following the completion of the field survey. SEH will provide the report to Dakota County and to MNDNR Natural Heritage staff for review and concurrence. Should occurrences of listed species be encountered, population data collected will be provided to the MNDNR using the reporting requirements set forth by the Natural Heritage Program.

Thank you for your review. If you have any questions regarding this request, please contact me at 218-241-1816 or jthayer@sehinc.com.

JT

Figure 1 – Project Location
Figure 2 – Trail Alignment
Attachment A – Collection Permit #23228

c: Rebecca Beduhn, Sr. Scientist
Deric Deuschle, Sr. Biologist
Toby Muse, PE (MN), Senior Project Manager

Engineers | Architects | Planners | Scientists

Short Elliott Hendrickson Inc., 418 West Superior Street, Suite 200, Duluth, MN 55802-1512
SEH is 100% employee-owned | **sehinc.com** | 218.279.3000 | 888.722.0547 | 888.908.8166 fax

Figure 1: Regional Location

April 2019

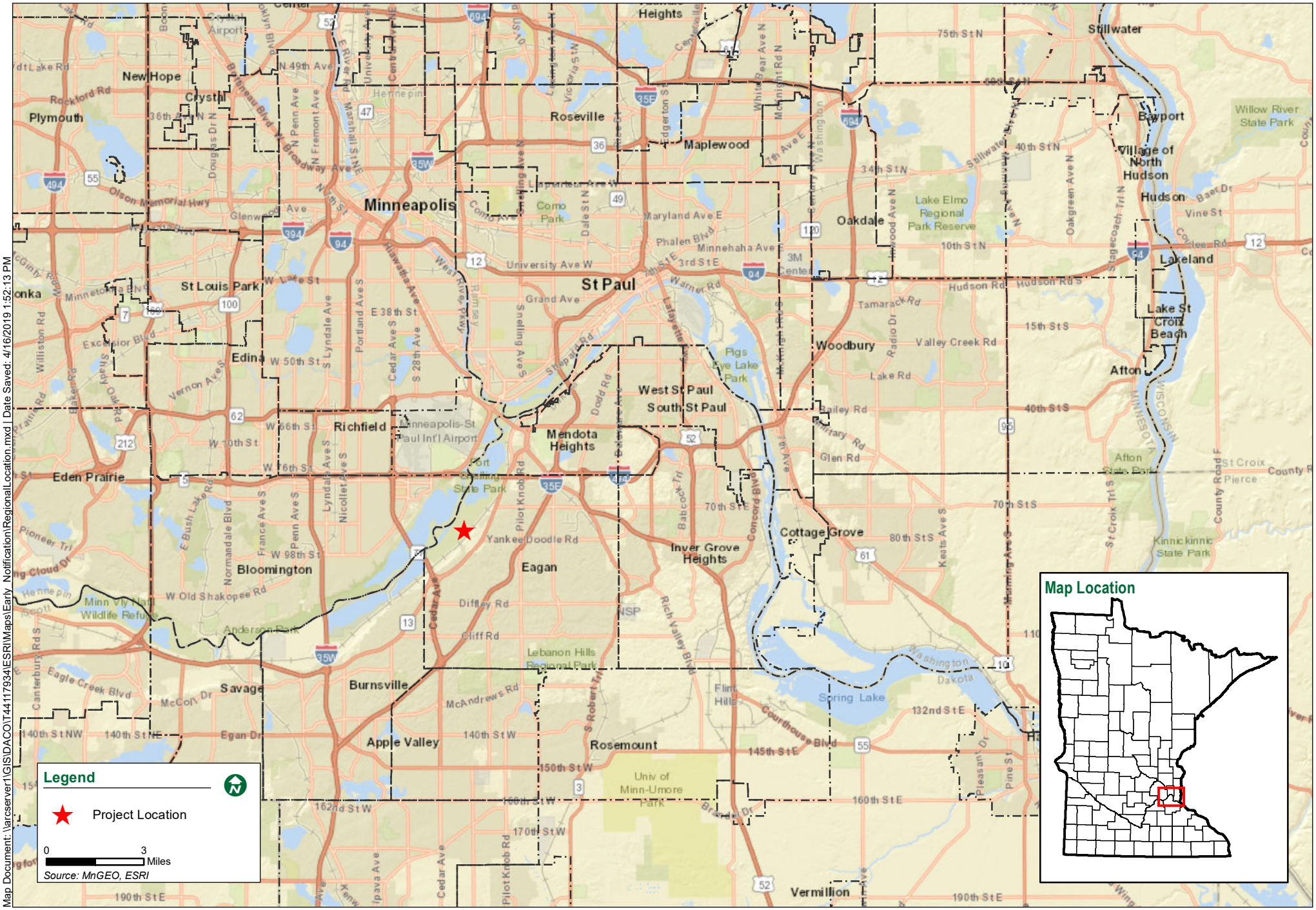

Map Document: \\arcserver1\GIS\DACO\T44117934\ESRI\Maps\Early_Notification\RegionalLocation.mxd | Date Saved: 4/16/2019 1:52:13 PM

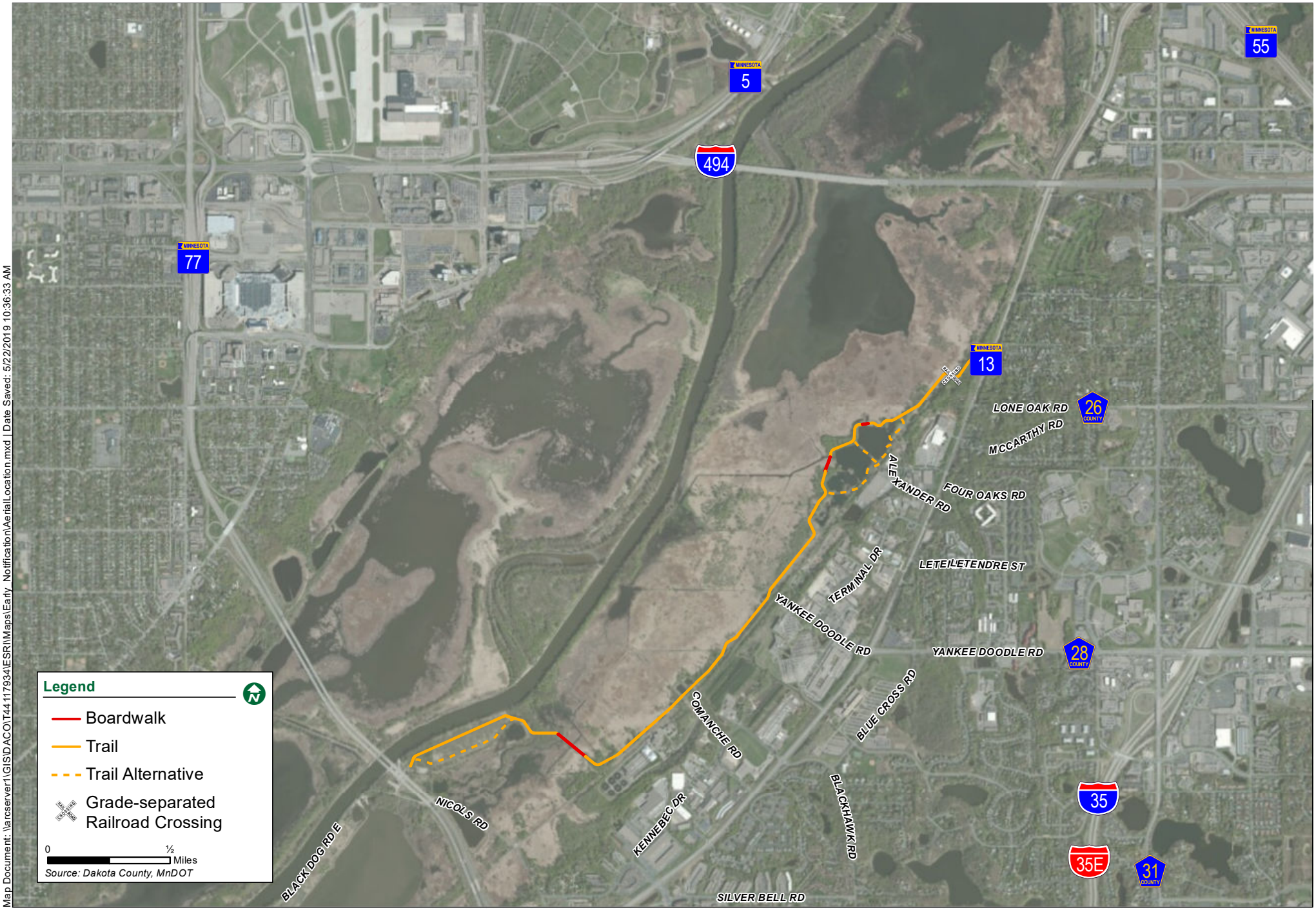

Map Document: \\arcserver1\GIS\DACO\T44 117934\ESRI\Maps\Early_Notification\AerialLocation.mxd | Date Saved: 5/22/2019 10:36:33 AM

DEPARTMENT OF NATURAL RESOURCES

STATE OF MINNESOTA
DEPARTMENT OF NATURAL RESOURCES
DIVISION OF ECOLOGICAL AND WATER RESOURCES
500 LAFAYETTE ROAD, BOX 25
ST. PAUL, MN 55155

SPECIAL PERMIT NO. 23228
(Taking and possession of endangered and/or threatened species)
June 15, 2018

TO WHOM IT MAY CONCERN:

Under the authority of Minn. Statutes, Section 84.0895 and Minn. Rules, Parts 6212.1800-2100, permission is hereby granted to:

Natalie White
Short Elliot Hendrickson, Inc.
418 West Superior Street, Suite 200
Duluth, MN 55802-1512

to collect an unlimited number of voucher specimens of endangered and threatened plant taxa for the purpose of research, subject to the following conditions:

1. Authorized Activities: This permit authorizes the collection and possession of endangered or threatened species of plants for the purpose of conducting surveys that are required by the Minnesota DNR's environmental review process. Before initiating any such survey, the Permittee must receive approval of a project-specific survey plan from the Minnesota Endangered Species Environmental Review Coordinator (Division of Ecological and Water Resources, Box 25, 500 Lafayette Road, St. Paul, MN 55155). Any proposed departure from the standards in the attached *Guidance on Documenting & Collecting Rare Plants* must be identified and justified in the project-specific plan. Survey work that proceeds without approval may not fulfill the needs of the DNR's environmental review process.
2. Vouchering: This permit also authorizes limited vouchering of endangered or threatened plants for the purpose of documenting discoveries made during the course of other activities.
3. Collection Guidance: When collecting plants under conditions 1 or 2, the Permittees must follow the specimen collection, data documentation, and data submission standards of the *Guidance.* Each specimen must be accompanied by a herbarium label and a data spreadsheet with all required fields completed. Specimen identification will be verified by a staff botanist. Following verification, the DNR will deposit specimens to the University of Minnesota Herbarium, St. Paul.
4. Other Permits Needed: Collecting on State Wildlife Management Areas, State Parks, Scientific and Natural Areas, federal lands, or tribal lands is to be done only with the express advanced approval of the manager responsible for those lands; other permits may also be needed. Collection of federally listed species on federal land requires a permit from the USFWS. The Permittee is responsible for securing landowner permission before entering private land.
5. Assistants: Assistants may carry out activities allowed by this permit under the direct on-site supervision of the Permittee. The Permittee must possess a copy of this permit while conducting permitted activities.
6. Invasive Species: Any activities conducted under this permit must be done to prevent the inadvertent transport of invasive species. DNR Operational Order 113 is incorporated into this permit by reference and may be found at http://files.dnr.state.mn.us/assistance/grants/habitat/heritage/oporder_113.pdf. Duties of the Permittee can be found in Sections II and III. The Permittee will prevent invasive species from entering into or spreading within a project site by cleaning tools, equipment, foot gear, and clothing of any plant materials, seed or soils prior to arriving at the project site and before moving from area to area in the project site.

7. Reports: An annual permit report must be submitted by mail or email to the Minnesota Endangered Species Coordinator (Division of Ecological and Water Resources, Box 25, 500 Lafayette Road, St. Paul, MN 55155) by January 31 of each year following a year during which this permit is effective.
   - The annual permit report must include a completed electronic spreadsheet (available under "Submitting Data" at http://www.dnr.state.mn.us/eco/nhnrp/nhis.html) containing information on a) any endangered or threatened species collected or otherwise taken under this permit, and b) any endangered or threatened species observed, but not otherwise reported to the DNR.
   - The completed spreadsheet must include at least the fields labeled as "required," as well as at least one set of precise locational coordinates (UTM, Lat/Long, GIS Shapefile). Additional fields in the data template should be completed to the degree practical.
   - The annual permit report will include a table that lists any survey reports, specimens, data spreadsheets, or other products that have been submitted separately to the DNR through the environmental review process during the previous year. Those products do not need to be resubmitted to the DNR.
   - Copies of other reports and publications resulting from permitted activities will be submitted to the Endangered Species Coordinator as they become available.
   - If no plants are collected under this permit, a report to that effect must be submitted.

This permit is effective immediately, and through December 31, 2023, but may be revoked at any time. Failure to submit reports or deliver specimens as required by this permit may be grounds for denial of future permit requests.

Richard J. Baker — June 15, 2018
Richard J. Baker — Date
Endangered Species Coordinator, Division of Ecological and Water Resources

I hereby certify that I have read and understand the provision of this permit and understand that this permit is not valid unless it is signed by me.

Permittee — Aug 1 2018
Permittee — Date

C: Jane Norris, CMRR Supervisor, Div. Ecological and Water Resources
Nathan Kestner, Regional Manager, Div. Ecological and Water Resources
Mike Peloquin, Regional Manager, Div. Ecological and Water Resources
Dan Lais, Regional Manager, Div. Ecological and Water Resources
Rob Collett, Regional Manager, Div. Ecological and Water Resources
Stacey Sharp, Regional Manager, Div. Enforcement
Tom Provost, Regional Manager, Div. Enforcement
Jason Peterson, Regional Manager, Div. Enforcement
Cory Palmer, Regional Manager, Div. Enforcement
Becky Marty, Regional Ecologist, Div. Ecological and Water Resources
Brooke Haworth, Regional Ecologist, Div. Ecological and Water Resources
Kit Elstad-Haveles, Regional Ecologist, Div. Ecological and Water Resources
Megan Benage, Regional Ecologist, Div. Ecological and Water Resources
Welby Smith, Botanist, Div. Ecological and Water Resources
Lisa Joyal, Endangered Species Review Coordinator, Div. Ecological and Water Resources
Permit Clerk, Div. Fish and Wildlife



Photo 1: Showing a component of the degraded wet meadow/carr community. Looking SW from the NE end of the survey area.



Photo 2: Showing a component of the degraded wet meadow/carr community.



Photo 3: Showing a component the wet meadow/carr community.



Photo 4: Showing the southern floodplain forest community.

Plant Species List

Acer negundo	*Galium aparine*	*Sparganium eurycarpum*
Acer saccharinum	*Galium trifidum*	*Spartina pectinata*
Acorus americanus	*Geum canadense*	*Symphyotricum lanceolatum*
Alliaria petiolata	*Glechoma hederacea*	*Thalictrum dasycarpum*
Allium canadense	*Hackelia virginiana*	*Typha* sp.
Ambrosia trifida	*Helianthus giganteus*	*Ulmus americana*
Amphicarpaea bracteata	*Hydrophyllum virginianum*	*Urtica dioica*
Angelica atropurpurea	*Impatiens capensis*	*Verbena hastata*
Arctium minus	*Laportea canadensis*	*Viola sororia*
Betula pumila	*Lathyrus palustris*	*Vitis riparia*
Boehmeria cylidica	*Leersia oryzoides*	
Bolboshoenus fluviatilis	*Leonurus cardiaca*	
Bromus inermis	*Lonicera morrowii*	
Calamagrostis canadensis	*Lycopus americanus*	
Calystegia sepium	*Lycopus asper*	
Cannabis sativa	*Mentha arvensis* var. *canadensis*	
Carex cristatella	*Nepeta cataria*	
Carex hystericina	*Oxalis stricta*	
Carex interior	*Parthenocissus* sp.	
Carex lacustris	*Persicaria amphibia*	
Carex normalis	*Persicaria* sp.	
Carex stricta	*Phalaris arundinacea*	
Carex utriculata	*Phragmites australis* subsp. *americanus*	
Cicuta maculata	*Physostegia virginiana*	
Circaea luteiana	*Poa palustris*	
Cirsium arvense	*Populus deltoides*	
Cirsium muticum	*Prenanthes alba*	
Conium maculatum	*Pycnanthemum virginianum*	
Cuscuta sp.	*Rhamnus cathartica*	
Doellingeria umbellata	*Rumex fueginus*	
Echinocystis lobata	*Sagittaria latifolia*	
Eleocharis acicularis	*Salix nigra*	
Elymus repens	*Salix petiolaris*	
Epilobium ciliatum	*Sambucus racemosa*	
Erigeron philadelphicus	*Sanicula marilandica*	
Euphorbia esula	*Shoenoplectus tabernaemontani*	
Eutrochium maculatum	*Scutellaria lateriflora*	
Fallopia convolvulus	*Silene latifolia*	
Frangula alnus	*Silphium perfoliatum*	
Fraxinus pennsylvanica	*Solidago gigantea*	

Appendix F

Federal Threatened and Endangered Species Correspondence

DEPARTMENT OF TRANSPORTATION

September 24, 2020

U.S. Fish and Wildlife Service
Ecological Services Field Office
4101 American Boulevard East
Bloomington, MN 55425

S.P. 019-090-024
Minnesota River Greenway
Eagan, Dakota County, Minnesota

Request for Concurrence – May affect, not likely to adversely affect – Northern long-eared bat (*Myotis septentrionalis*)

Request for Concurrence – May affect, not likely to adversely affect – Rusty patched bumble bee (*Bombus affinis*)

No Effect Determination – Higgins eye pearlymussel (*Lampsilis higginsii*)
No Effect Determination – Prairie bush clover (*Lespedeza leptostachya*)

Project Description: This project proposes to construct the 3.4 mile long Fort Snelling segment of the Minnesota River Greenway in Fort Snelling State Park, Eagan, Minnesota, along with a pedestrian bridge over the Union Pacific Railroad track near CSAH 26 (Lone Oak Road). See Attachment 1.

The proposed trail is a 10', multi-use, non-motorized path between TH 77 and I-494 south of the Minnesota River, extending from the existing DNR boat launch and parking lot off Black Dog Road to the existing Lone Oak Road trailhead. Portions of the trail are proposed to be a 10' bituminous surface, with other portions located on raised boardwalks through the Minnesota River floodway to minimize impacts to wetlands. The boardwalks will have helical anchor or driven pile concrete foundations and the superstructure, deck and railings will be concrete, timber or a combination of materials. Kennealy Creek, a designated trout stream, will be crossed using either a bridge or a boardwalk. Associated activities include installing chain link fencing, storm sewer, storm water management appurtenances, and curb and gutter as required.

The proposed pedestrian bridge is a prefabricated steel truss bridge that will cross the railroad's Right of Way perpendicularly and provide a 23'4" vertical clearance between the bottom of the proposed structure and the top of the rails. A 10' chain link fence is also proposed along both sides of the bridge crossing the tracks and along the railroad side of the trail parallel to the tracks.

In total, fewer than 15 acres of tree removal is anticipated, with all removal to occur during the winter (November 1 – March 31, inclusive). No work is proposed on existing bridges.



Action Area identified for the proposed project.

Conservation Measures:

- Winter tree removal required – tree removal November 1 to March 31, inclusive.
- All activities on the western ¾ mile portion of the trail work, adjacent to the Minnesota River and TH 77, must avoid bat pupping season – no construction activities may occur June 1 to August 15, inclusive.
- Direct temporary lighting, if used, away from wooded areas during the bat active season (April 1 to Oct 31, inclusive). If installing new or replacing existing permanent lights, use downward-facing, full cut-off lens lights (with same intensity or less for replacement lighting); or for those transportation agencies using the BUG system developed by the Illuminating Engineering Society, be as close to 0 for all three ratings with a priority of "uplight" of 0 and "backlight" as low as practicable. *Please contact Susan Zarling (MnDOT Lighting Engineer) at 651-234-7052 with questions about approved products.*
- If used, erosion control blanket should be limited to 'bio-netting' or 'natural netting' types, and specifically not products containing plastic mesh netting or other plastic components. These are Category 3N or 4N in the 2016 & 2018 MnDOT Standards Specifications for Construction. Be aware that hydro-mulch products may contain small plastic fibers to aid in its matrix strength. These loose fibers could potentially re-suspend and make their way into Public Waters impacting protected aquatic species (e.g., mussels, fishes).
- Revegetation of disturbed soils must follow MnDOT Metro Vegetation Establishment Recommendations (http://www.dot.state.mn.us/environment/erosion/vegetation.html), and use native mixes in areas that are not proposed for mowed turf grass. Include mowing and weed spraying as indicated in the District Vegetation Establishment Recommendations. For additional information, visit: http://www.dot.state.mn.us/environment/erosion/vegetation.html.

Species List for the Project Action Area

A list of federally threatened, endangered, proposed and candidate species, and designated and proposed critical habitat that overlaps with the action area, was requested via the Information for Planning and Consultation (IPaC) web application maintained by the U.S. Fish and Wildlife Service (requested September 2020). Based on this list, the project is within the range of the following:

Species	Status	Habitat
Northern long-eared bat *Myotis septentrionalis*	Threatened	Hibernates in caves and mines - swarming in surrounding wooded areas in autumn. Roosts and forages in upland forests during spring and summer.
Higgins eye pearlymussel *Lampsilis higginsii*	Endangered	Mississippi River
Rusty patched bumble bee *Bombus affinis*	Endangered	Grasslands with flowering plants from April through October, underground and abandoned rodent cavities or clumps of grasses above ground as nesting sites, and undisturbed soil for hibernating queens to overwinter.
Prairie bush clover *Lespedeza leptostachya*	Threatened	Native prairie on well-drained soils

MnDOT consults the Minnesota Department of Natural Resources Natural Heritage Information System (Copyright 2019 State of Minnesota, Department of Natural Resources), and other resources as available, to determine if proposed projects may affect listed species.

Endangered Species Act – Section 7 Consultation

Section 7 of Endangered Species Act of 1973, as amended (Act), requires each Federal agency to review any action that it funds, authorizes or carries out to determine whether it may affect threatened, endangered, proposed species or listed critical habitat. Federal agencies (or their designated representatives) must consult with the U.S. Fish and

Wildlife Service (Service) if any such effects may occur as a result of their actions. Consultation with the Service is not necessary if the proposed action will not directly or indirectly affect listed species or critical habitat. If a federal agency finds that an action will have no effect on listed species or critical habitat, it should maintain a written record of that finding that includes the supporting rationale.

Concurrence Requests

Northern long-eared bat – *May affect, not likely to adversely affect.*
No documented NLEB hibernacula and/or roost trees are documented within the project area. Documented records are located nearby on bridges, but proposed activities are not anticipated to result in incidental take and/or significant modification or degradation to suitable habitat. Any potential lighting work will meet bat-friendly conservation measures; all project activities on the portion of the proposed trail adjacent to the Minnesota River and TH 77 will occur outside of the June 1 – August 15 NLEB pupping season; and tree clearing will be limited to less than 15 acres and will be conducted during the winter months during the NLEB's inactive season. **MnDOT on behalf of the FHWA has determined that the proposed action may affect, but is not likely to adversely affect the northern long-eared bat and is requesting concurrence for this determination.**

Rusty-patched bumble bee – *May affect, not likely to adversely affect*.
A portion of the proposed action is within a USFWS identified High Potential Zone (HPZ), but habitat within this portion of the project area consists of disturbed wooded and open areas dominated by invasive species (buckthorn and reed canary grass & smooth brome, respectively) with low potential for floral resources or nesting. The area is frequently inundated with flood waters and is unlikely to be suitable habitat for hibernation. RPBB observations occur within 2 miles from the project area, within a park setting. Tree clearing associated with this project may include scattered trees and brush along the proposed trail corridor.

Little is known about RPBB nesting and overwintering site selection (USFWS 2016), but based on current knowledge of RPBB nesting and overwintering site selection it's unlikely that the areas proposed for impacts along the project corridor would be used by RPBB for hibernation or nesting due to compacted and/or hydric soils, heavy understory vegetation, and limited foraging resources.

Based on the project scope and the justification provided above, activities are not anticipated to result in incidental take and/or significant modification or degradation to suitable habitat. **MnDOT on behalf of the FHWA has determined that the proposed action *may affect, but is not likely to adversely affect* the rusty-patched bumble bee and is requesting concurrence for this determination.**

No Effect Determinations

No Effect Determination – Higgins eye pearlymussel (*Lampsilis higginsii*)
No Effect Determination – Prairie bush clover (*Lespedeza leptostachya*)

No documented occurrences for these species exist within the Action Area. Suitable habitat is not anticipated to be impacted by the proposed project. ***Therefore, MnDOT on behalf of the FHWA has made a determination of no effect for this species.***

Please contact me if there are questions or concerns.

Thank you,

Digitally signed by Christopher E Smith
Date: 2020.09.24 16:21:28 -05'00'

Christopher E. Smith, M.Sc., C.W.B.®
Wildlife Ecologist | Protected Species Program Coordinator

Minnesota Department of Transportation
Office of Environmental Stewardship
395 John Ireland Blvd., M.S. 620
St. Paul, Minnesota 55155
O: 651-366-3605

Attachment 1 - Schematic Trail Layout form Lone Oak Road to Cedar Ave.

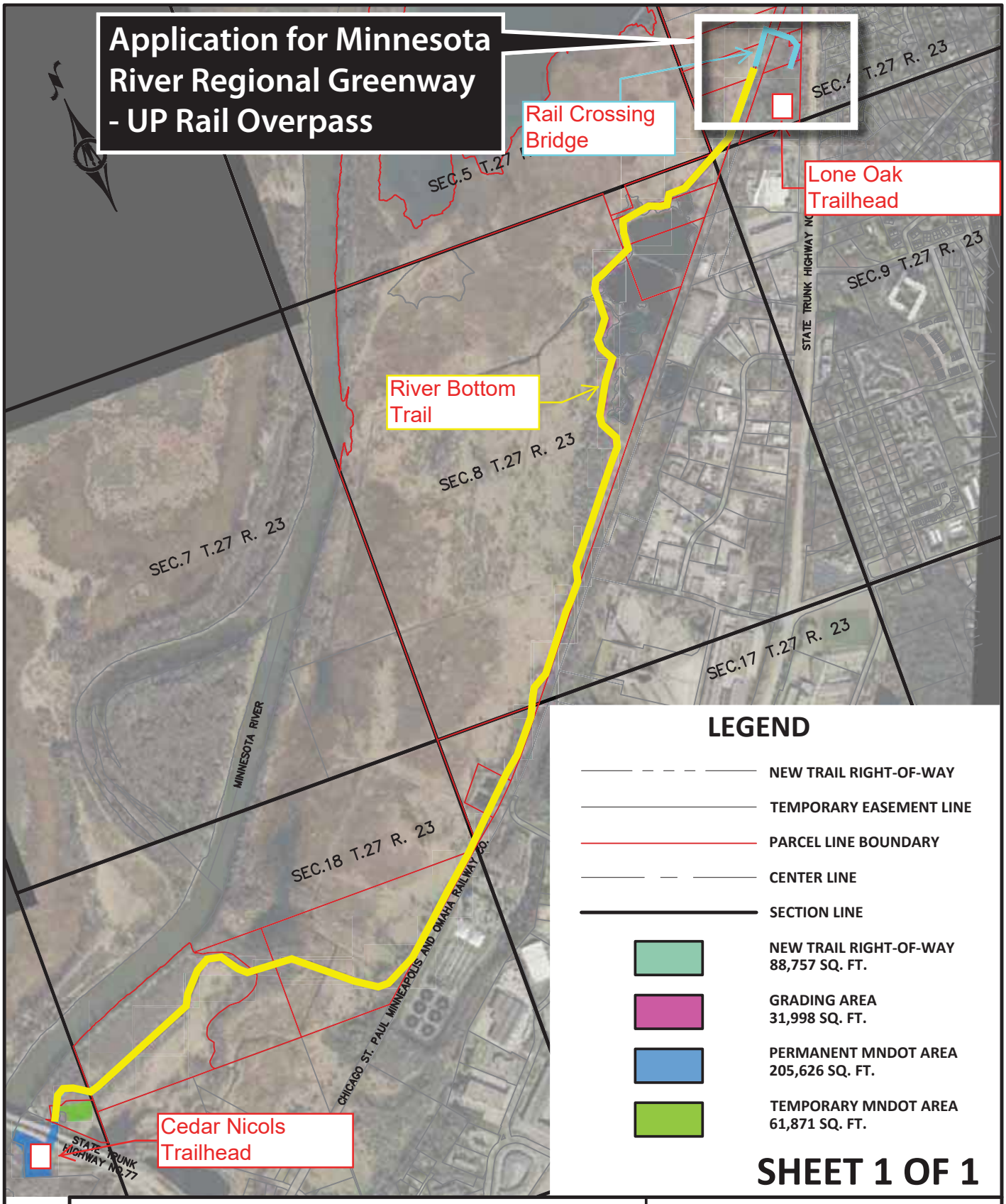

LEGEND

- NEW TRAIL RIGHT-OF-WAY
- TEMPORARY EASEMENT LINE
- PARCEL LINE BOUNDARY
- CENTER LINE
- SECTION LINE
- NEW TRAIL RIGHT-OF-WAY 88,757 SQ. FT.
- GRADING AREA 31,998 SQ. FT.
- PERMANENT MNDOT AREA 205,626 SQ. FT.
- TEMPORARY MNDOT AREA 61,871 SQ. FT.

SHEET 1 OF 1

EXHIBIT B–PARCEL SKETCH OVERVIEW

DAKOTA COUNTY

MINNESOTA RIVER GREENWAY TRAIL

BOLTON & MENK

12224 NICOLLET AVENUE
BURNSVILLE, MINNESOTA 55337
(952) 890–0509

0 1500 3000

SCALE FEET

H:\DACO\T44117934\CAD\C3D\figures\Daco_Greenway_Trail_Exhibit_B.dwg 12/13/2019 1:31 PM

©Bolton & Menk, Inc. 2019, All Rights Reserved

JOB NUMBER: T44117934 DRAWN BY: TJT

Request for Concurrence, SP 019-090-024, ESA (Section 7)
Smith, Christopher E (DOT)
to:
Marsh, Dawn S
09/24/2020 04:26 PM
Cc:
Samuel Turrentine, "josh.kinney@co.dakota.mn.us", "Khan, Sulmaan M (DOT)"
Hide Details
From: "Smith, Christopher E (DOT)" <christopher.e.smith@state.mn.us>
To: "Marsh, Dawn S" <dawn_marsh@fws.gov>
Cc: Samuel Turrentine <sturrentine@sehinc.com>, "josh.kinney@co.dakota.mn.us" <josh.kinney@co.dakota.mn.us>, "Khan, Sulmaan M (DOT)" <sulmaan.m.khan@state.mn.us>
History: This message has been forwarded.

1 Attachment

Request-for-Concurrence_019-090-024_ESA(Section_7).pdf

Ms. Marsh -
Attached is my **Request of Concurrence** that this project *may affect, but is not likely to adversely affect* the northern long-eared bat (NLEB) and rusty-patched bumble bee (RPBB). ***MnDOT, on behalf of FHWA, is requesting written concurrence that the project may affect, but is not likely to adversely affect*** **NLEB and RPBB.**

Sam-

Endangered Species Act (link)

We need to wait for concurrence from USFWS before our ESA Section 7 obligations are complete. I will forward you a copy of the USFWS correspondence when received.

"Conservation Measures" identified in this review represent project commitments and must be incorporated into project documents (e.g., specifications, special provisions, green sheets, etc.). Please consult the OES wildlife ecologist if modifications are requested.

Migratory Bird Treaty Act (link)
Protected birds are not anticipated to be impacted by the proposed action.

Bald and Golden Eagle Protection Act (link)
Based on the best available information, the proposed action may disturb, harm, or destroy a bald eagle or a bald eagle nest. A leaf-off bald eagle nest survey is recommended. Please contact me with questions about methods.

State Resources

Please note that the proposed action may impact state resources, including known populations of state endangered and/or threatened species. Information about coordination with the Minnesota Department of

Natural Resources is available at https://www.dnr.state.mn.us/eco/ereview/index.html, along with the NHIS Data Request Form.

Please let me know if you have questions or concerns.

-Chris

--

Christopher E. Smith, M.Sc., CWB®
Wildlife Ecologist | Protected Species Program Coordinator
(he/him/his) **what is this?*

Minnesota Department of Transportation
Office of Environmental Stewardship
395 John Ireland Blvd., M.S. 620
St. Paul, Minnesota 55155
O: 651-366-3605
mndot.gov





Re: [EXTERNAL] Request for Concurrence, SP 019-090-024, ESA (Section 7)
Marsh, Dawn S
to:
Smith, Christopher E (DOT)
10/20/2020 01:27 PM
Cc:
Samuel Turrentine, "josh.kinney@co.dakota.mn.us", "Khan, Sulmaan M (DOT)", Philip Forst
Hide Details
From: "Marsh, Dawn S" <dawn_marsh@fws.gov>
To: "Smith, Christopher E (DOT)" <christopher.e.smith@state.mn.us>
Cc: Samuel Turrentine <sturrentine@sehinc.com>, "josh.kinney@co.dakota.mn.us" <josh.kinney@co.dakota.mn.us>, "Khan, Sulmaan M (DOT)" <sulmaan.m.khan@state.mn.us>, Philip Forst <phil.forst@dot.gov>

Good afternoon,

The U.S. Fish and Wildlife Service (Service) has reviewed the information provided in your September 24, 2020 letter regarding the S.P. 019-090-024 Ft. Snelling Segment of the Minnesota River Greenway Project (the Project) in Dakota County, Minnesota and provides the following response according to the Endangered Species Act of 1973 (ESA) (87 Stat. 884, as amended; 16 U.S.C. 1531 *et seq*.).

Portions of the proposed project area are located within mapped High Potential Zones for the rusty patched bumble bee (*Bombus affinis*). The species has been observed approximately 2 miles from the proposed project area. However, our initial review is that little foraging or overwintering rusty patched bumble bee habitat exists within the proposed project area where ground disturbance is planned, as the project area consists of disturbed wooded and open areas dominated by non-native, invasive plants. Ground disturbing activities associated with the project will include the creation of a new multi-use path and the clearing of scattered trees and brush along the proposed trail corridor.

We concur that this project *may affect, but is not likely to adversely affect* the rusty patched bumble bee. The proposed project area has low potential for floral resources and nesting or overwintering habitat. Based on the information provided, the described project area consists of disturbed areas that support a low diversity of floral resources. The area is also within a floodplain and is subject to regular flood events that make the area unsuitable for overwintering rusty patched bumble bees. Therefore, we believe that species presence is unlikely, and we do not anticipate the temporary loss of this sub-optimal habitat to have an adverse effect on the species.

Per your letter, the proposed action may negatively impact the northern long-eared bat (*Myotis septentrionalis*). Due to the forested habitat within the project area and the relative proximity to recorded locations for the species, the northern long-eared bat may be present in the affected area during the roosting season, approximately April 1 to October 31.

The Service concurs with the determination that the project *may affect, but is not likely to adversely affect* the northern long-eared bat for the following reasons:

- Tree removal will take place during a period (November 1 to March 31, inclusive) when the species will not be present in the action area. Therefore, we do not expect any direct effects to

the species as a result of the action.

- Removal of forested habitat is not anticipated to appreciably change the usability of northern long-eared bat habitat in the action area.

- Temporary lighting or the installation/replacement of permanent lighting will meet bat-friendly standards. All temporary lighting will be directed away from wooded areas during the active season (April 1 to October 31, inclusive). New, or existing lights slated for replacement, will be downward-facing, full cut-off lens lights.

- All proposed project activities occurring adjacent to TH 77 and the Minnesota River will occur outside of the northern long-eared bat pupping season (June 1 to August 15).

This concludes consultation under Section 7 of the Endangered Species Act, as amended for the species listed above. Please contact our office if this project changes or new information reveals effects of the action to proposed or listed species or critical habitat to an extent not covered in your original request. If you have any questions regarding our response or if you need additional information, please contact me at 952-252-0092 (extension 202) or via email at dawn_marsh@fws.gov.

Thank you,
Dawn

Dawn Marsh (she/her/hers) | Fish and Wildlife Biologist
U.S. Fish & Wildlife Service | Minnesota-Wisconsin Field Office
4101 American Blvd. E., Bloomington, MN 55425
Tel: (952) 252-0092 x 202*
*Teleworking - please email to schedule a call

From: Smith, Christopher E (DOT) <christopher.e.smith@state.mn.us>
Sent: Thursday, December 03, 2020 8:10 AM
To: Toby P. Muse <tmuse@sehinc.com>
Subject: Bald Eagle Nest Survey

Hi Toby,

This e-mail may serve as confirmation of the completion of Bald Eagle nest surveys, and includes my recommendations going forward.

S.P. 156-090-004 (TH 61/63) – This area was surveyed for bald eagles nests via a driving survey and ground-based survey. A single nest was observed east of the project area approx. 900' across a backwater of the Mississippi River. Given the distance from the project further coordination with USFWS is not needed.

> **Recommendation(s):** Project should include language requiring the contract to make cursory inspections of project area and trees prior to tree clearing to ensure new eagle nests have not been constructed. If large stick nests are detected, tree clearing must be delayed and coordination with MnDOT and USFWS is required.

S.P. 019-090-024 (MN Greenway Trail) – The majority of areas where tree clearing is anticipated was surveyed for bald eagle nests via a ground-based survey. No nests were observed, however the site includes habitat with high risk of eagle nesting. Given the length of the project and access limitations, the entire corridor was not surveyed for bald eagles.

> **Recommendation(s):**
> Project should make ROW surveyors aware of eagle nest concerns, and any staking done ahead of physical construction should include direction to keep and eye out for eagle nests and to mark locations on maps and report to project management and MnDOT OES.
>
> Project should include language requiring the contract to make cursory inspections of project area and trees prior to tree clearing to ensure new eagle nests have not been constructed. If large stick nests are detected, tree clearing must be delayed and coordination with MnDOT and USFWS is required.

Please let me know if you have additional questions or concerns.

-Chris

--
Christopher E. Smith, M.Sc., CWB®

Wildlife Ecologist | Protected Species Program Coordinator
(he/him/his) **what is this?*

Minnesota Department of Transportation
Office of Environmental Stewardship
395 John Ireland Blvd., M.S. 620
St. Paul, Minnesota 55155
O: 651-366-3605
mndot.gov





Appendix G

Cultural Resources Review Correspondence

Office of Environmental Stewardship
Cultural Resources Unit
395 John Ireland Blvd., Mail Stop 620
St. Paul, MN 55155-1899

March 3, 2021

Samuel Turrentine
Senior Planner
Short Elliott Hendrickson, Inc.
10901 Red Circle Drive, Suite 300
Minnetonka, MN 55343

Re: S.P. 019-090-022, Minnesota River Greenway-Fort Snelling Segment, Dakota County, Township 27N, Range 23W, Sections 4, 8, 9, 13, 17, 18.

Dear Mr. Turrentine:

The professionally qualified staff (as per 36 CFR 61) in the Minnesota Department of Transportation (MnDOT) Cultural Resources Unit (CRU) have reviewed the above-referenced Federal Highway Administration (FHWA) undertaking pursuant to our FHWA-delegated responsibilities for compliance with Section 306108 (formerly known as Section 106 of the National Historic Preservation Act [54 USC 300101 et seq.]) and its implementing regulations, 36 CFR 800, and as per the terms of the 2015 Section 106 Programmatic Agreement between the FHWA, the U.S. Army Corps of Engineers (Corps), MnDOT, and the Minnesota State Historic Preservation Office (SHPO).

PLEASE NOTE: Minnesota state statutes regarding cultural resources remain the responsibility of the entity performing, funding, or licensing the work under the Minnesota Historic Sites Act (MS 138.665-.666); or the land-controlling agency for the Field Archaeology Act of Minnesota (MS 138.40), and the Private Cemeteries Act of Minnesota (M.S. 307.08). For this project, those entities are Dakota County and the Minnesota Department of Natural Resources (MnDNR).

Description of Undertaking

According to the project's State Aid for Local Transportation Historical/Archaeological Review Request (dated May 31, 2019) and supplementary information provided by the project team, Dakota County is proposing to construct a proposed Fort Snelling trail segment of the Minnesota River Greenway. The proposed trail segment will be 10 feet wide, and it is located primarily in the Fort Snelling State Park area between Trunk Highway (TH) 77/Cedar Avenue and I-494, south of the Minnesota River. The trail will extend from the existing MnDNR boat launch and parking lot off Black Dog Road to an existing trailhead south of I-494 and west of TH 13 (constructed in 2018 near the Lone Oak Road intersection). The project includes three segments of boardwalks to minimize impacts to wetlands. Additional trail alignments are proposed to either minimize/avoid impacts to existing natural or cultural resources or to enhance user experience. The alternative alignment nearest the TH 77 trailhead would pave an existing unpaved trail.

Area of Potential Effects (APE)

As defined in 36 CFR 800.16, the area of potential effects (APE) is "the geographic area or areas within which an undertaking may directly or indirectly cause alterations in the character or use of historic

properties, if any such properties exist." The project corridor is screened from the surrounding area by vegetation or passes through undeveloped areas. Therefore, the APE is limited to the anticipated maximum limits of ground disturbance. The APE is based on project plans current as of January 2021 and includes a 3.31-mile (5.33-kilometer [km]) linear corridor approximately 20 feet (ft) wide centered on the proposed trail route. The vertical depth of the APE is 1 ft.

Consultation

MnDOT CRU consulted with the following tribal nations, as per 36 CFR 800 or existing agreements between FHWA and certain tribes: Fort Peck Tribes, Lower Sioux Indian Community, Prairie Island Indian Community, Santee Sioux Nation, Shakopee Mdewakanton Sioux Community, Sisseton Wahpeton Oyate of the Lake Traverse Reservation, and Upper Sioux Community. Cheyanne St. John, Lower Sioux Indian Community Tribal Historic Preservation Officer, responded that they would like to consult on the activities for the project. Leonard Wabasha, Shakopee Mdewakanton Sioux Community Director of Cultural Resources, also responded with an interest in the project. Our unit also consulted with cultural resources staff from the Minnesota Historical Society (MNHS) and the MnDNR, who control lands the proposed trail will cross.

Identification and Evaluation

MnDOT CRU review of the State Historic Preservation Office (SHPO) database of inventoried properties, along with a review of topography, historic aerial photographs, and current land uses, confirmed there are no architecture/history resources 45 years or older in the APE.

In 2018 Dakota County sponsored a Phase Ia archaeological investigation for the project, completed by Bolton & Menk, that provided information about prior archaeological investigations, known archaeological sites, geomorphological conditions, expected project impacts, coordination with MnDOT CRU, and recommended next steps. The Phase Ia identified 12 previously recorded archaeological sites, one of which is an alpha (unconfirmed) site, within one mile of the proposed APE. The proposed APE was found to intersect with one previously recorded site (21DK0035), and is near several other sites including burials (21KD0025 and 21DK0026). All three sites were unevaluated for listing in the National Register at the time of the Phase Ia. Site 21DK0035 (Kennealy Creek Village Site) is a likely location of the historic Black Dog's Village. The site has been subjected to multiple years of investigation; however, past projects have either chosen to avoid or minimize impacts to the site. The Phase Ia also identified seven prior investigations within or adjacent to the proposed project that covered just over 0.4 miles of the proposed APE.

MnDOT CRU archaeological staff reviewed the Phase Ia report by Bolton & Menk, as well as information on known historic properties (i.e., those determined eligible for or listed on the National Register), previously inventoried properties (i.e., those not previously evaluated for National Register eligibility), significant state sites, and burials/cemeteries, from databases maintained by SHPO, Office of the State Archaeologist (OSA) (including the unrecorded historic cemeteries database), and the Minnesota Indian Affairs Council (MIAC). In addition, MnDOT CRU sent an Information Request form to OSA and MIAC, asking if they had additional information on sites MnDOT CRU had identified or if they were aware of any additional sites beyond what we identified in our searches.

A review of SHPO, OSA, and MIAC databases in June 2019 confirmed the results of the 2018 Bolton and Menk Phase Ia and revealed no National Register-listed or eligible sites, and no known burials, within or adjacent to the APE. In a response to MnDOT CRU's written inquiry, on June 21, 2019 OSA stated that no archaeological site leads have been reported within the APE, however three archaeological sites (21DK0035, 21DK0065, and 21DK0068) are within or adjacent to the APE. OSA further stated that the

APE is situated in the Minnesota River Valley, an area with extensive archaeological deposits, and as such the area has high potential for archaeological remains. No response regarding the project was received from MIAC.

On November 13, 2020, a project site visit was conducted with Kate Beane from MNHS, Dave Radford from MnDNR, and Tyler Lund-Kyrola with the 106 Group, Dakota County's archaeological consultant. This site visit was conducted per stipulations of a MnDNR Research Permit to conduct the archaeological survey. On November 18, another project site visit was arranged by MnDOT CRU and attendees included Tribal Historic Preservation Officers Cheyanne St. John (Lower Sioux Indian Community) and Leonard Wabasha (Shakopee Mdewakanton Sioux Community), Dave Radford (MnDNR), Teresa Martin (MnDOT CRU), and Tyler Lund-Kyrola, (The 106 Group). Of particular interest during this meeting was the portion of the APE that intersects with previously identified archaeological site 21DK0035. At the end of the meeting, all participants agreed that a Phase I Survey including 21DK0035 and the APE west of the site was unnecessary and unwarranted due to a lack of impact associated with construction methods in those portions of the APE (which involves bringing in fill and constructing on top with no excavation), however Phase I Survey east of the site was warranted. All participants also agreed that a Phase II Evaluation of site 21DK0035 was unwarranted. Leonard Wabasha was also particularly interested in a Phase I survey of the portion of the APE that connects site 21DK0035 to the railway and the portions of the APE that skirt bodies of water.

Based on a review of Bolton and Menk's Phase Ia investigation, as well as consultation with OSA and interested tribal groups, MnDOT CRU determined that an archaeological survey for the project was warranted. A Phase I archaeological survey of the project APE was conducted by The 106 Group in October and November 2020 on behalf of Dakota County Parks. The 106 Group's survey methodology was informed by the consultations between MnDOT CRU, MnDNR, MNHS, Lower Sioux Indian Community, Shakopee Mdewakanton Sioux Community, and The 106 Group on November 13 and November 18, 2020. Based on this consultation, Phase I survey of the APE including 21DK0035, as well as the APE west of the site, was not conducted Survey of the remainder of the APE resulted in no archaeological sites identified. The 106 Group recommended no additional archaeological work for the portions of the APE that were subjected to Phase I survey.

Based on a review of the project as summarized above, it is the determination of MnDOT CRU that the Phase I archaeological investigations conducted for the project are adequate and complete and no further archaeological investigations are warranted for this project as currently proposed.

Assessment of Effects

There are no properties within the project APE that are listed on or eligible for the NRHP.

Findings

This unit finds there will be **no historic properties affected** by the project as currently proposed. **It is the responsibility of the project proposer to notify MnDOT CRU of any scope changes, and if any unanticipated archaeological discoveries are made during project construction** so we can determine if additional review under Section 106 is required.

If your project requires a permit from the Corps, please attach this findings letter to your permit as proof that the Section 106 process has been completed on their behalf through the terms of the Amended 2014 Statewide Programmatic Agreement among the FHWA, SHPO, ACHP and the Corps.

Sincerely,



Dylan Eigenberger, Archaeologist
MnDOT Cultural Resources Unit

CC List

Josh Kinney, Dakota County Project Manager (Josh.Kinney@co.dakota.mn.us)
Toby Muse, SEH Project Manager (tmuse@sehinc.com)
Dylan Goetsch, Minnesota Indian Affairs Council (Dylan.Goetsch@state.mn.us)
Jennifer Tworzyanski, Office of the State Archaeologist (Jennifer.Tworzyanski@state.mn.us)
Cheyanne St. John, Lower Sioux Indian Community (cheyanne.stjohn@lowersioux.com)
Leonard Wabasha, Shakopee Mdewakanton Sioux Community (leonard.wabasha@shakopeedakota.org)
Kate Beane, Minnesota Historical Society (kate.beane@mnhs.org)
Dave Radford, Minnesota Department of Natural Resources (dave.radford@state.mn.us)
Teresa Martin, MnDOT CRU (Teresa.martin@state.mn.us)
Tyler Lund-Kyrola, 106 Group (TylerLundKyrola@106group.com)