DAKOTA COUNTY PROPOSAL
FOR HIGHWAY CONSTRUCTION
AND MAINTENANCE PROJECTS

Bids will be received until **9:00 a.m. October 30, 2012**
at the Empire Transportation Facility located at
2800 160th Street West
Rosemount, Minnesota 55068

Proposal of _____

Name

_____

Address

_____

Contact Person / Phone Number / E-Mail Address

TO FURNISH AND DELIVER ALL MATERIALS, AND TO DO AND PERFORM ALL WORK IN ACCORDANCE WITH THE CONTRACT, THE PLANS AND THE APPROVED DEPARTMENT OF TRANSPORTATION "STANDARD SPECIFICATIONS FOR CONSTRUCTION", 2005 EDITION ON FILE IN THE OFFICE OF THE COUNTY ENGINEER EXCEPT AS STATED OTHERWISE IN THE SPECIAL PROVISIONS INCLUDED IN THIS PROPOSAL, FOR

COUNTY PROJ. NO:	5-41
STATE PROJECT NO:	019-605-028, 179-020-031, 1901-148
MINN. PROJECT NO:	HPPH-STP09-STP 1912(258)
LOCATION:	Trunk Highway 13 /County State Aid Highway 5 interchange Burnsville
TYPE OF WORK:	Grading, Aggregate Base, Bituminous Surfacing, Storm Sewer, Concrete Curb & Gutter, Concrete Walk, Retaining Walls, Traffic Signals, Lighting & Bridge No. 19036
LENGTH:	1.743 miles
COMPLETION DATE:	June 1, 2015

*******NOTICE TO BIDDERS*********

IN SUBMITTING A BID THE FOLLOWING DOCUMENTS MUST BE COMPLETED AND RETURNED:

- **COVER SHEET, EQUAL EMPLOYMENT/ANTI-DISCRIMINATION SHEET, NOTICE TO BIDDERS - (SPECIFICATIONS), STIPULATION FOR FOREIGN IRON OR STEEL MATERIALS (IF APPLICABLE), ATTACHMENT CM 32-34, NON-COLLUSION DECLARATION, BID BOND, TENNESSEN NOTICE, SCHEDULE OF BID PRICES, AND PROPOSAL GUARANTY.**
- **IF RETURNING BY MAIL, CLEARLY MARK THE OUTER ENVELOPE WITH "SEALED BID ENCLOSED – C.P. 5-41, etc. – DUE OCTOBER 30, 2012, 9:00 AM". THIS INFORMATION MUST BE ON ALL OUTER ENVELOPES INCLUDING FEDEX, PRIORITY MAIL, ETC.**
- **ALL PAPERS WITH OR ATTACHED TO THE PROPOSAL FORM ARE ESSENTIAL PARTS OF THE PROPOSAL AND SHALL NOT BE ALTERED WITHOUT SPECIFIC AUTHORIZATION.**
- **INITIAL CHANGES MADE IN THE SCHEDULE OF PRICES.**
- **ACKNOWLEDGE ADDENDUMS ON BACK COVER SHEET.**

BID RIGGING IS A SERIOUS CRIME. IF YOU HAVE ANY INFORMATION CONCERNING COLLUSIVE BIDDING, EVEN A REQUEST TO SUBMIT A COMPLIMENTARY BID, PLEASE CALL THE MINNESOTA ATTORNEY GENERAL'S OFFICE AT (651) 296-1796.

To the Board of County Commissioners of DAKOTA County, Minnesota:

According to the advertisement of Dakota County inviting proposals for the improvement of the section of highway hereinbefore named, and in conformity with the Contract, Plans, Specifications and Special Provisions pertaining thereto, all on file in the office of the County Engineer:

(I)(We) hereby certify that (I am) (we are) the only person(s) interested in this proposal as principal(s); that this proposal is made and submitted without fraud or collusion with any other person, firm or corporation at all; that an examination has been made of the site of the work and the Contract form, with the Plans, Specifications and Special Provisions for the improvement.

(I)(We) understand that the quantities of work shown herein are approximate only and are subject to increase or decrease; that all quantities of work, whether increased or decreased within the limits specified in Mn/DOT 1903, are to be done at the unit prices shown on the attached schedule; that, at the time of opening bids, totals only will be read, but that comparison of bids will be based on the correct summation of item totals obtained from the unit prices bid, as provided in Mn/DOT 1301.

(I)(We) propose to furnish all necessary machinery, equipment, tools, labor and other means of construction and to furnish all materials specified, in the manner and at the time prescribed, all according to the terms of the Contract and Plans, Specifications, and the Special Provisions forming a part of this.

(I)(We) further propose to do all Extra Work that may be required to complete the contemplated improvement, at unit prices or lump sums to be agreed upon in writing before starting such work, or if such prices or sums cannot be agreed upon, to do such work on a Force Account basis, as provided in Mn/DOT 1904.

(I)(We) further propose to execute the form of Contract within 10 days after receiving written notice of award, as provided in Mn/DOT 1306.

(I)(We) further propose to furnish a payment bond equal to the Contract amount, and a performance bond equal to the Contract amount, with the aggregate liability of the bond(s) equal to twice the full amount of the Contract if the contract is less than or equal to five million dollars ($5,000,000.00), or if the contract is in excess of five million dollars ($5,000,000.00) the aggregate liability shall be equal to the amount of the contract, as security for the construction and completion of the improvement according to the Plans, Specifications and Special Provisions as provided in Mn/DOT 1305.

(I)(We) further propose to do all work according to the Plans, Specifications and Special Provisions, and to renew or repair any work that may be rejected due to defective materials or workmanship, before completion and acceptance of the Project by Dakota County.

(I)(We) agree to all provisions of Minnesota Statutes, Section 181.59.

(I)(We) further propose to begin work and to prosecute and complete the same according to the time schedule set forth in the Special Provisions for the improvement.

(I)(We) assign to Dakota County all claims for overcharges as to goods and materials purchased in connection with this Project resulting from antitrust violations that arise under the antitrust laws of the United States and the antitrust laws of the State of Minnesota. This clause also applies to subcontractors and first tier suppliers under this Contract.

NOTICE TO ALL BIDDERS

To report bid rigging activities call:

1-800-424-9071

The U.S. Department of Transportation (DOT) operates the above toll-free "hotline" Monday through Friday, 8:00 a.m. to 5:00 p.m., eastern time. Anyone with knowledge of possible bid rigging, bidder collusion, or other fraudulent activities should use the "hotline" to report such activities.

The "hotline" is part of the DOT's continuing effort to identify and investigate highway construction contract fraud and abuse and is operated under the direction of the DOT Inspector General. All information will be treated confidentially and caller anonymity will be respected.

LIMITATION ON USE OF CONTRACT FUNDS FOR LOBBYING

Appendix C to Part ___ - Contract Clause

NEW RESTRICTIONS ON LOBBYING

(a) Definitions. As used in this clause,

"Agency", as defined in 5 U.S.C. 552(f), includes Federal Executive departments and agencies as well as independent regulatory commissions and Government corporations, as defined in 31 U.S.C. 9101(1).

"Covered Federal action" means any of the following Federal actions:

(1) The awarding of any Federal contract;

(2) The making of any Federal grant;

(3) The making of any Federal loan;

(4) The entering into of any cooperative agreement; and,

(5) The extension, continuation, renewal, amendment, or modification of any Federal contract, grant, load, or cooperative agreement.

Covered Federal action does not include receiving from an agency a commitment providing for the United States to insure or guarantee a loan.

"Indian tribe" and "tribal organization" have the meaning provided in section 4 of the Indian Self-Determination and Education Assistance Act (25 U.S.C. 450B). Alaskan Natives are included under the definitions of Indian tribes in that Act.

"Influencing or attempting to influence" means making, with the intent to influence, any communication to or appearance before an officer or employee of any agency, a Member of Congress, an officer or employee of Congress, or an employee of a Member of Congress in connection with any covered Federal action.

"Local government" means a unit of government in a State and, if chartered, established, or otherwise recognized by a State for the performance of a governmental duty, including a local public authority, a special district, an intrastate district, a council of governments, a sponsor group representative organization, and any other instrumentality of a local government.

"Officer or employee of an agency" includes the following individuals who are employed by an agency:

(1) An individual who is appointed to a position in the Government under title 5, U.S. Code, including a position under a temporary appointment;

(2) A member of the uniformed services as defined in section 101(3). title 37, U.S. Code;

(3) A special Government employee as defined in section 202, title 18, U.S. Code; and,

(4) An individual who is a member of a Federal advisory committee, as defined by the Federal Advisory Committee Act, title 5, U.S. Code appendix 2.

"Person" means an individual, corporation, company, association, authority, firm, partnership, society, State, and local government, regardless of whether such entity is operated for profit or not for profit. This term excludes an Indian tribe, tribal organization, or any other Indian organization with respect to expenditures specifically permitted by other Federal law.

"Reasonable compensation" means, with respect to a regularly employed officer or employee of any person, compensation that is consistent with the normal compensation for such officer or employee for work that is not furnished to, not funded by, or not furnished in cooperation with the Federal Government.

"Reasonable payment" means, with respect to professional and other technical services, a payment in an amount that is consistent with the amount normally paid for such services in the private sector.

"Recipient" includes all contractors and subcontractors at any tier in connection with a Federal contract. The term excludes an Indian tribe, tribal organization, or any other Indian organization with respect to expenditures specifically permitted by other Federal law.

"Regularly employed" means, with respect to an officer or employee of a person requesting or receiving a Federal contract, an officer or employee who is employed by such person for at least 130 working days within one year immediately preceding the date of the submission that initiates agency consideration of such person for receipt of such contract. An officer or employee who is employed by such person for less than 130 working days within one year immediately preceding the date of the submission that initiates agency consideration of such person shall be considered to be regularly employed as soon as he or she is employed by such person for 130 working days.

"State" means a State of the United States, the District of Columbia, the Commonwealth of Puerto Rico, a territory or possession of the United States, an agency or instrumentality of a State, and a multi-State, regional, or interstate entity having governmental duties and powers.

(b) Prohibition.

(1) Section 1352 of title 31, U.S. Code provides in part that no appropriated funds may be expended by the recipient of a Federal contract, grant, loan, or cooperative agreement to pay any person for influencing or attempting to influence an officer or employee of any agency, a Member of Congress, an officer or employee of Congress, or an employee of a Member of Congress in connection with any of the following covered Federal actions: the awarding of any Federal contract, the making of any Federal grant, the making of any Federal loan, the entering into of any cooperative agreement, and the extension, continuation, renewal, amendment, or modification of any Federal contract, grant, loan, or cooperative agreement.

(2) The prohibition does not apply as follows:

(i) Agency and legislative liaison by Own Employees.

(A) The prohibition on the use of appropriated funds, in paragraph (1) of this section, does not apply in the case of a payment of reasonable

compensation made to an officer or employee of a person requesting or receiving a Federal activities not directly related to a covered Federal action.

(B) For purposes of paragraph (A) of this section, providing any information specifically requested by an agency or Congress is allowable at any time.

(C) For purposes of paragraph (A) of this section, the following agency and legislative liaison activities are allowable at any time only where they are not related to a specific solicitation for any covered Federal action:
  (i) Discussing with an agency (including individual demonstrations) the qualities and characteristics of the person's products or services, conditions or terms of sale, and service capabilities; and,
  (ii) Technical discussions and other activities regarding the application or adaptation of the person's products or services for an agency's use.

(D) For purposes of paragraph (A) of this section, the following agency and legislative liaison activities are allowable only where they are prior to formal solicitation of any covered Federal action:
  (i) Providing any information not specifically requested but necessary for an agency to make an informed decision about initiation of a covered Federal action;
  (ii) Technical discussions regarding the preparation of an unsolicited proposal prior to its official submission; and,
  (iii) Capability presentations by persons seeking awards from an agency pursuant to the provisions of the Small Business Act, as amended by Public Law 95-507 and other subsequent amendments.

(E) Only those activities expressly authorized by paragraph (i) of this section are allowable under paragraph (i).

(ii) Professional and Technical Services by Own Employees.

(A) The prohibition on the use of appropriated funds, in paragraph (1) of this section, does not apply in the case of a payment of reasonable compensation made to an officer or employee of a person requesting or receiving a Federal contract or an extension, continuation, renewal, amendment, or modification of a Federal contract if payment is for professional of technical services rendered directly in the preparation submission, or negotiation of any bid, proposal, or application for that Federal contract or for meeting requirements imposed by or pursuant to law as a condition for receiving that Federal contract.

(B) For purposes of paragraph (A) of this section, "professional and technical services" shall be limited to advice and analysis directly

applying any professional or technical discipline. For example, drafting of a legal document accompanying a bid or proposal by a lawyer is allowable. Similarly, technical advice provided by an engineer on the performance or operational capability of a piece of equipment rendered directly in the negotiation of a contract is allowable. However, communications with the intent to influence made by a professional (such as a licensed lawyer), or a technical person (such as a licensed accountant) are not allowable under this section unless they provide advice and analysis directly applying their professional or technical expertise and unless the advice or analysis is rendered directly and solely in the preparation, submission or negotiation of a covered Federal action. Thus, for example, communications with the intent to influence made by a lawyer that do not provide legal advice or analysis directly and solely related to the legal aspects of his or her client's proposal, but generally advocate one proposal over another are not allowable under this section because the lawyer is not providing professional legal services, Similarly, communications with the intent to influence made by an engineer providing an engineering analysis prior to the preparation or submission of a bid or proposal are not allowable under this section since the engineer is providing technical services but not directly in the preparation, submission or negotiation of a covered Federal action.

(C) Requirements imposed by or pursuant to law as a condition for receiving a covered Federal award include those required by law or regulation, or reasonably expected to be required by law or regulation, and any other requirements in the actual award documents.

(D) Only those services expressly authorized by paragraph (ii) of this section are allowable under paragraph (ii).

(iii) Reporting for Own Employees.

No reporting is required with respect to payments of reasonable compensation made to regularly employed officers or employees of a person.

(iv) Professional and technical services by Other than Own Employees.

(A) The prohibition on the use of appropriated funds, in paragraph (1) of this section, does not apply in the case of any reasonable payment to a person, other than an officer or employee of a person requesting or receiving a covered Federal action, if the payment is for professional or technical services rendered directly in the preparation, submission, or negotiation of any bid, proposal, or application for that Federal contract or for meeting requirements imposed by or pursuant to law as a condition for receiving that Federal contract.

(B) For purposes of paragraph (A) of this section, "professional and technical services" shall be limited to advice and analysis directly applying any professional or technical discipline. For example, drafting of a legal document accompanying a bid or proposal by a lawyer is allowable. Similarly, technical advice provided by an engineer on the performance or operational capability of a piece of equipment rendered directly in the negotiation of a contract is allowable. However, communications with the intent to influence made by a professional (such as a licensed lawyer) or a technical person (such as a licensed accountant) are not allowable under this section unless they provide advice and analysis directly applying their professional or technical expertise unless the advice or analysis is rendered directly and solely in the preparation, submission or negotiation of a covered Federal action. Thus, for example, communications with the intent to influence made by a lawyer that do not provide legal advice or analysis directly and solely related to the legal aspects of his or her client's proposal, but generally advocate one proposal over another are not allowable under this section because the lawyer is not providing professional legal services. Similarly, communications with the intent to influence made by an engineer providing an engineering analysis prior to the preparation or submission of a bid or proposal are not allowable under this section since the engineer is providing technical services but not directly in the preparation, submission or negotiation of a covered Federal action.

(C) Requirements imposed by or pursuant to law as a condition for receiving a covered Federal award include those required by law or regulation, or reasonably expected to be required by law or regulation, and any other requirements in the actual award documents.

(D) Persons other than officers or employees of a person requesting or receiving a covered Federal action include consultants and trade associations.

(E) Only those services expressly authorized by paragraph (iv) of this section are allowable under paragraph (iv).

(c) Disclosure.

(1) Each person who requests or receives from an agency a Federal contract shall file with that agency a certification, set forth in ____, that the person has not made, and will not make, any payment prohibited by paragraph (b) of this clause.

(2) Each person who requests or receives from an agency a Federal contract shall file with that agency a disclosure form, Standard Form-LLL, "Disclosure of Lobbying Activities," if such person has made or has agreed to make any payment using nonappropriated funds (to include profits from any covered Federal action), which would be prohibited under paragraph (b) of this clause if paid for with appropriated funds.

(3) Each person shall file a disclosure form at the end of each calendar quarter in which there occurs any event that requires disclosure or that materially affects the accuracy of the information contained in any disclosure form previously filed by such person under paragraph (2) of this section. An event that materially affects the accuracy of this information reported includes:

(i) A cumulative increase of $25,000 or more in the amount paid or expected to be paid for influencing or attempting to influence a covered Federal action; or

(ii) A change in the person(s) or individual(s) influencing or attempting to influence a covered Federal action; or,

(iii) A change in the officer(s), employee(s), or Member(s) contacted to influence or attempt to influence a covered Federal action.

(4) Any person who requests or receives from a person referred to in paragraph (1) of this section a subcontract exceeding $100,000 at any tier under a Federal contract shall file a certification, and a disclosure form, if required, to the next tier above.

(5) All disclosure forms, but not certifications, shall be forwarded from tier to tier until received by the person referred to in paragraph (1) of this section. That person shall forward all disclosure forms to the agency.

(d) Agreement. In accepting any contract resulting from this solicitation, the person submitting the offer agrees not to make any payment prohibited by this clause.

(e) Penalties.

(1) Any person who makes an expenditure prohibited under paragraph (b) of this clause shall be subject to a civil penalty of not less than $10,000 and not more than $100,000 of each such expenditure.

(2) Any person who fails to file or amend the disclosure form to be filed or amended if required by this clause, shall be subject to a civil penalty of not less than $10,000 and not more than $100,000 or each such failure.

(3) Contractors may rely without liability on the representations made by their subcontractors in the certification and disclosure form.

(f) Cost allowability. Nothing in this clause is to be interpreted to make allowable or reasonable any costs which would be unallowable or unreasonable in accordance with Part 31 or the Federal Acquisition Regulation. Conversely, costs made specifically unallowable by the requirements in this clause will not be made allowable under any of the provisions of Part 31 of the Federal Acquisition Regulation.

(End of Clause)

BILLING CODE 3110-01-M

FEDERAL-AID PROJECT

NOTICE

By signing and submitting this proposal, the prospective primary bidder is providing the certification set out below. The inability of a person to provide the certification required below will not necessarily result in denial of participation in this covered transaction. The prospective participant shall submit an explanation of why he/she cannot provide the certification set out below. Certification or explanation will be considered concerning Dakota County determination whether to enter this transaction. Failure of the prospective primary participant to furnish a certification or a written explanation why he/she cannot provide the certification shall disqualify such people from participation in this transaction.

The certification in this clause is a material representation of fact upon which reliance was placed when Dakota County decided to enter this transaction. If it is later decided that the prospective primary participant knowingly rendered an erroneous certification, beyond other remedies available to the Federal Government, Dakota County may end this transaction for cause of default. The prospective primary participant shall provide immediate written notice to Dakota County if any time the prospective primary participant learns that his/her certification was erroneous when submitted or has become erroneous due to changed circumstances.

The terms covered transaction, debarred, suspended, ineligible, lower tier covered transaction, participant, person, primary covered transaction, principal, proposal, and voluntarily excluded as used in this clause have the meanings set out in the Definition and Coverage sections of the rules carrying out Federal Executive Order 12549 dated February 18, 1986. Bidders may contact Mn/DOT for assistance in obtaining a copy of these regulations.

The prospective primary participant agrees by submitting this proposal that, should the proposed covered transaction be entered, he/she shall not knowingly enter any lower tier covered transaction with a person who is debarred, suspended, declared in-eligible, or voluntarily excluded from participation in this covered transaction unless authorized by Dakota County and Mn/DOT. Nothing contained in this shall be construed to require establishment of system of records to render in good faith the certification required by this clause. The knowledge and information of a participant are not required to exceed that which is normally possessed by a prudent person in the ordinary course of business dealings.

The prospective primary participant further agrees by submitting this proposal that he/she will include the clause titled "Certification Regarding Debarment, Suspension, Ineligibility and Voluntary Exclusion-Lower Tier Covered Transaction" provided by Mn/DOT without modification in all solicitations for lower tier covered transactions. A participant in a covered transaction may rely upon a certification of a prospective participant in a lower tier covered transaction that he/she and his/her principals are not de-barred, suspended, ineligible, or voluntarily excluded, from the covered transaction by any Federal agency, unless he/she knows that the certification is erroneous. A participant may decide the method and frequency by which he/she decides the eligibility of his/her principals.

Except as authorized by Mn/DOT, if a participant in a covered transaction knowingly enters a lower tier covered transaction with a person who is suspended, debarred, ineligible, or voluntarily excluded from participation in this transaction, beyond other remedies available to the Federal Government, Dakota County may end this transaction for cause or default.

Certification Regarding Debarment, Suspension, and Other Responsibility Matters-Primary Covered Transactions

(I)(We) certify that the firm or any person associated with it in the capacity of owner, partner, director, officer, project director, manager auditor, or any position involving the administration of Federal funds:

- are not presently debarred, suspended, proposed for debarment, declared ineligible or voluntary excluded from covered transactions by any Federal department or agency;

- have not within the three-year period preceding this proposal been convicted of or had a civil judgment rendered for commission of fraud or a criminal offense in connection with obtaining, attempting to obtain, or performing a public (Federal, State or local) transaction or contract under a public transaction; or violation of Federal or State antitrust statutes; or commission of embezzlement, theft, forgery, bribery, falsification or destruction of records, making false statements; or receiving stolen property;

- are not presently indicted for or otherwise criminally or civilly charged by a governmental entity with commission of any of the above-enumerated offenses;

- have not within a three-year period preceding this application/proposal had one or more transactions (Federal, State, or local) terminated for cause or default.

Where the prospective primary participant is unable to certify to any of the statements in this certification, such prospective participants shall attach an explanation to this proposal.

(I)(We) agree that (my)(our) signatures on this proposal form certification of "status" under penalty of perjury under the laws of the United States.

NOTICE TO BIDDERS

SUSPENSIONS/DEBARMENTS

August 7, 2012

DEPARTMENT OF TRANSPORTATION

NOTICE OF DEBARMENT

NOTICE IS HEREBY GIVEN that MnDOT has ordered that the following vendors be debarred for a period of three (3) years, effective February 24, 2010 until February 24, 2013:

- Joseph Edward Riley, Morris, MN
- John Thomas Riley, Morris, MN

NOTICE IS HEREBY GIVEN that MnDOT has ordered that the following vendors be debarred for a period of three (3) years, effective March 25, 2011 until March 25, 2014:

- Philip Joseph Franklin, Leesburg, VA
- Franklin Drywall, Inc. and its affiliates, Little Canada, MN
- Master Drywall, Inc. and its affiliates, Little Canada, MN

NOTICE OF SUSPENSION

NOTICE IS HEREBY GIVEN that the Department of Transportation ("MnDOT") has ordered that the following vendors be suspended for a period of sixty (60) days, effective August 7, 2012 until October 6, 2012:

- Marlon Louis Danner and his affiliates, South St. Paul, MN
- Danner, Inc. and its affiliates, South St. Paul, MN
- Bull Dog Leasing, Inc. and its affiliates, Inver Grove Heights, MN
- Danner Family Limited Partnership and its affiliates, South St. Paul, MN
- Ell-Z Trucking, Inc. and its affiliates, South St. Paul, MN
- Danner Environmental, Inc. and its affiliates, South St. Paul, MN

Minnesota Statute section 161.315 prohibits the Commissioner, counties, towns, or home rule or statutory cities from awarding or approving the award of a contract for goods or services to a person who is suspended or debarred, including:

1) any contract under which a debarred or suspended person will serve as a subcontractor or material supplier,
2) any business or affiliate which the debarred or suspended person exercises substantial influence or control, and
3) any business or entity, which is sold or transferred by a debarred person to a relative or any other party over whose actions the debarred person exercises substantial influence or control, remains ineligible during the duration of the seller's or transfer's debarment.

DEPARTMENT OF ADMINISTRATION

As of the date of this notice and in accordance with Minnesota Rules 1230.1150, the Minnesota Department of Administration has debarred and disqualified the following persons and businesses from entering into or receiving a State of Minnesota contract:

NAME	DATE OF DEBARMENT
Alternative Counseling Clinic 337 97th Lane NE Minneapolis, MN 55434	Oct. 22, 2008 through Oct. 22, 2011 (eligible for reinstatement on Oct. 22, 2012)
Bull Dog Leasing, Inc. 7854 Danner Court Inver Grove Heights, MN 55076	Aug. 30, 2011 through Aug. 30, 2014 (eligible for reinstatement on Aug. 30, 2015)
Danner Family Ltd. Ptnship. 843 Hardman Ave. S. S. St. Paul, MN 55075	Aug. 30, 2011 through Aug. 30, 2014 (eligible for reinstatement on Aug. 30, 2015)
Danner, Inc. 843 Hardman Ave. S. S. St. Paul, MN 55075	Aug. 30, 2011 through Aug. 30, 2014 (eligible for reinstatement on Aug. 30, 2015)
Ell-Z Trucking, Inc. 843 Hardman Ave. S. S. St. Paul, MN 55075	Aug. 30, 2011 through Aug. 30, 2014 (eligible for reinstatement on Aug. 30, 2015)
Excel Companies, Inc. 700 Bunker Lake Blvd. Anoka, MN 55303	April 23, 2012 through October 23, 2012
Franklin Drywall, Inc. 43279 Fieldsview Crt. Leesburg, VA 20176	March 25, 2011 through March 25, 2014 (eligible for reinstatement on March 25, 2015)
Master Drywall, Inc. 43279 Fieldsview Crt. Leesburg, VA 20176	March 25, 2011 through March 25, 2014 (eligible for reinstatement on March 25, 2015)
Riley Brothers Construction PO Box 535 Morris, MN 56267	Nov. 9, 2009 through Nov. 9, 2012

Minnesota Administrative Rule part 1230.1150, subpart 6 requires the Materials Management Division to maintain a master list of all suspensions and debarments. The master list must retain all information concerning suspensions and debarments as a public record for at least three (3) years following the end of a suspension or debarment. Refer to the following website for the master list: http://www.mmd.admin.state.mn.us/debarredreport.asp.

If the project is financed in whole or in part with federal funds, refer to the following website for vendors debarred by federal government agencies: https://www.epls.gov/.

SPECIAL PROVISIONS FOR
S.P. 019-605-028, 179-020-031, 1901-148
TH 13 & CSAH 5 INTERCHANGE, C.P. 5-41
DAKOTA COUNTY, MINNESOTA

TABLE OF CONTENTS

Number of Pages

TITLE PAGE 1
TO THE COMMISSIONERS 1
NOTICE TO ALL BIDDERS-TO REPORT BID RIGGING 1
LIMITATION ON USE OF CONTRACT FUNDS FOR LOBBYING 6
FEDERAL AID PROJECT NOTICE 2
NOTICE TO ALL BIDDERS-SUSPENSIONS / DEBARMENT 2
TABLE OF CONTENTS 2
SPECIAL PROVISIONS DIVISION A – LABOR. .. . . 1A – 11A
NOTICE TO BIDDERS-TRAFFIC CONTROL PREVAILING WAGE 2
FEDERAL WAGE RATES 10
PROMPT PAYMENT TO SUBCONTRACTORS NOTICE 1
STATE WAGE RATES 10
MINNESOTA TRUCK RENTAL RATES 3
CONTRACTOR CERTIFIES COMPLIANCE RESOLUTION 11-240. 1
NOTICE TO BIDDERS (SPECIFICATIONS). 1
DIVISION S . . . . . 1 S - 424 S
DIVISION SB . . . . . 1 SB- 53 SB
DIVISION SL. . . . . 1 SL- 20 SL
DIVISION SS . . . . . 1 SS-77 SS
DIVISION ST . . . . . 1 ST-4 ST
DIVISION SZ . . . . . 1 SZ-44 SZ
DIVISION 2 BURNSVILLE SANITARY AND WATERMAIN (U2). . . . . .1 UT- 45 UT
PART A- MnDOT SPECIFICATION MODIFICATIONS
PART B: C.E.A.M. SPECIFICATION MODIFICATIONS
PART C: PRESSURE REDUCING STATION SPECIFICATIONS
PART D: PIPELINE STEEL CASING PIPE AND BORING AND JACKING SPECIFICATIONS

DIVISION SLC BURNSVILLE ROADWAY LIGHTING . . . . . 1SLC – 17SLC
EXHIBIT 1 INSURANCE TERMS 3
STIPULATION FOR FOREIGN IRON OR STEEL MATERIALS (1601) 1
FUEL ESCALATION CLAUSE (1910) 2
DISADVANTAGED BUSINESS ENTERPRISE (DBE) SPECIAL PROVISIONS . . 26
EQUAL EMPLOYMENT OPPORTUNITY (EEO) SPECIAL PROVISIONS 38
APPENDIX A (SHORT VERSION) 1
ATTACHMENT CM 32-34 1
MNDOT FORM 21658A 2
NON-COLLUSION AFFIDAVIT 1
DAKOTA COUNTY DEMOLITION WASTE DISPOSAL POLICY AND PROCEDURES (ORDINANCE NO. 110) 4
COUNTY BOARD RESOLUTION 11-240 REGARDING BID AND CONTRACT POLICY 4
TENNESSEN NOTICE DATA PRIVACY: ACKNOWLEDGMENT. 1
NPDES PERMIT APPLICATION 7
CAUTION BLANDING'S TURTLES 2
BLANDING’S TURTLE ENVIRONMENTAL REVIEW FACT SHEET. 1
RECOMMENDATIONS FOR AVOIDING AND MINIMIZING IMPACTS 2
SCHEDULE OF BID PRICES 21
FORM 21126D. 1

FEDERALLY FUNDED CONSTRUCTION CONTRACTS
SPECIAL PROVISIONS DIVISION A - LABOR
February 1, 2006

I. PREAMBLE

It is in the public interest that public buildings and other public works projects be constructed and maintained by the best means and the highest quality of labor reasonably available and that persons working on public works projects be compensated according to the real value of the services they perform.[1]

Therefore, the department shall administer this contract pursuant to the **Federal Davis-Bacon and Related Acts**, **Required Contract Provisions Federal-Aid Construction Contracts, Form-1273**, **U.S. Department of Labor's Field Operations Handbook, State of Minnesota Statutes and Rules, MN/DOT's Standard Specifications for Construction, MN/DOT's Contract Administration Manual** and **MN/DOT's State Aid Manual.**

II. DEFINITIONS[2]

A. **Contract**: The written agreement between the contracting authority and the prime contractor setting forth their obligations, including, but not limited to, the performance of the work, the furnishing of labor and materials, the basis of payment, and other requirements contained in the contract documents.

B. **Contracting Authority**: The political subdivision, governmental body, board, department, commission, or officer making the award and execution of contract as the party of the first part.

C. **Contractor**: The term "contractor" in these provisions shall include the prime contractor, subcontractor, agent, or other person doing or contracting to do all or part of the work under this contract.[3]

D. **Department**: The Department of Transportation of the State of Minnesota, or the political subdivision, governmental body, board, commission, office, department, division, or agency constituted for administration of the contract work within its jurisdiction.

E. **First Tier Subcontractor**: An individual, firm, corporation, or other entity to which the prime contractor sublets part of the contract.

F. **Independent Truck Owner/Operator (ITO)**: An individual, partnership, or principal stockholder of a corporation who owns or holds a vehicle under lease and who contracts that vehicle and the owner's services to an entity that provides construction services to a public works project.[4]

G. **Laborer or Mechanic**: A worker in a construction industry labor class identified in or pursuant to Minnesota Rules 5200.1100, Master Job Classifications.[5]

H. **Plan**: The plan, profiles, typical cross-sections, and supplemental drawings that show the locations, character, dimensions, and details of the work to be done.

I. **Prime Contractor**: The individual, firm, corporation, or other entity contracting for and undertaking prosecution of the prescribed work; the party of the second part to the contract, acting directly or through a duly authorized representative.

---

[1] Minnesota Statute 177.41
[2] MN/DOT Standard Specifications for Construction, Section 1103
[3] Minnesota Statute 177.44, Subdivision 1
[4] Minnesota Rules 5200.1106, Subpart 7(A)
[5] Minnesota Rules 5200.1106, Subpart 5(A)

J. **Project**: The specific section of the highway, the location, or the type of work together with all appurtenances and construction to be performed under the contract.

K. **Second Tier Subcontractor**: An individual, firm, corporation, or other entity to which a first tier subcontractor sublets part of the contract.

L. **Special Provisions**: Additions and revisions to the standard and supplemental specifications covering conditions peculiar to an individual project.

M. **Specifications**: A general term applied to all directions, provisions, and requirements pertaining to performance of the work.

N. **Subcontractor**: An individual, firm, corporation, or other entity to which the prime contractor or subcontractor sublets part of the contract.

O. **Substantially In Place**: Mineral aggregate is deposited on the project site directly or through spreaders where it can be spread from or compacted at the location where it was deposited.[6]

P. **Trucking Broker**: An individual or business entity, the activities of which include, but are not limited to: contracting to provide trucking services in the construction industry to users of such services, contracting to obtain such services from providers of trucking services, dispatching the providers of the services to do work as required by the users of the services, receiving payment from the users in consideration of the trucking services provided and making payment to the providers for the services.[7]

Q. **Trucking Firm/Multiple Truck Owner (MTO)**: Any business entity that owns more than one vehicle and hires the vehicles out for services to brokers or contractors on public works projects.[8]

R. **Work**: The furnishing of all labor, materials, equipment, and other incidentals necessary or convenient to the successful completion of the project and the carrying out of all the duties and obligations imposed by the contract upon the contractor. Also used to indicate the construction required or completed by the contractor.

III. SCOPE – SPECIAL PROVISIONS DIVISION A & CONTRACT

A. These provisions shall apply to this contract, which is funded in whole or in part with federal funds[9] and state funds.[10]

B. These provisions shall apply to the prime contractor and all subcontractors contracting to do all or part of the work under this contract.[11]

C. The provisions established in this document do not necessarily represent all federal, state, and local laws, ordinances, rules and regulations. It is the responsibility of the prime contractor to inform itself and all subcontractors about other regulations that may be applicable to this contract.

D. The prime contractor is responsible to ensure that each subcontractor performing work under this contract receives copies of all required contract provisions.[12] These provisions shall be incorporated into written subcontracts and must be displayed on the poster board.[13]

E. The department shall administer this contract in accordance with all applicable federal regulations, state statutes and rules[14], along with the plans, specifications and provisions, which are incorporated into and found elsewhere in this contract.

---

[6] Minnesota Rules 5200.1106, Subpart 5(C)
[7] Minnesota Rules 5200.1106, Subpart 7(C)
[8] Minnesota Rules 5200.1106, Subpart 7(B)
[9] 29 CFR Part 5.5(a)
[10] Minnesota Statute 177.41
[11] Minnesota Statute 177.44, Subdivision 1
[12] 29 CFR Part 5.5(a)(6)
[13] Minnesota Statute 177.44, Subdivision 5

F. An unpublished decision from the Minnesota Court of Appeals affirms the authority of the Minnesota Commissioner of Transportation to enforce the Minnesota Prevailing Wage Law on a case-by-case basis.[15] Therefore, the department shall provide enforcement in a manner consistent with the decision notwithstanding any prior notices on the subject.

G. For additional information refer to: www.dot.state.mn.us/const/labor/.

IV. PAYROLLS AND STATEMENTS

A. Each week, in which work was performed under this contract, all contractors shall submit a payroll statement to the department.[16] Each statement shall be submitted within seven days after the regular payment date of the payroll period.[17] Each payroll submitted shall include all employees that performed work under this contract and provide at a minimum the following information:[18]

1. Contractor's name, address, and telephone number.
2. State project number.
3. Payroll report number.
4. Project location.
5. Workweek ending date.
6. Name, social security number, and home address for each employee.
7. Labor classification(s) and/or three-digit code for each employee.
8. Hourly straight time and overtime wage rates paid to each employee.
9. Daily and weekly hours worked in each labor classification, including overtime hours for each employee.
10. Authorized legal deductions for each employee.
11. Project gross amount, weekly gross amount and net wages paid to each employee.

B. Payroll records may be submitted in any form provided it includes all the information contained in **Subpart A (1 - 11)** of this section.[19] However, contractors needing a payroll form may utilize the "front side" of the **U.S. Department of Labor's, WH-347 - Payroll Form**. This form is available by visiting the Labor Compliance website.[20]

C. All payroll records must be accompanied with a completed and signed **MN/DOT, 21658 - Statement of Compliance Form**.[21]

D. The prime contractor is responsible for assuring that its payroll records and those of all subcontractors include all employees that performed work under this contract and accurately reflect the hours worked, regular and overtime rates of pay and classification of work performed.[22]

E. The prime contractor is responsible to maintain all certified payroll records, including those of all subcontractors, throughout the course of a construction project and retain all records for a period of three years after the final contract voucher has been issued.[23]

---

[14] Minnesota Rules 8820.3000, Subpart 2
[15] Minnesota Court of Appeals Case Number: C6-97-1582
[16] Required Contract Provisions Federal-Aid Construction Contracts Form-1273, Section V, Subpart 2(c)
[17] 29 CFR Part 3.4(a)
[18] Minnesota Rules 5200.1106, Subpart 10
[19] Required Contract Provisions Federal-Aid Construction Contracts Form-1273, Section V, Subpart 2(c)
[20] www.dot.state.mn.us/const/labor/
[21] Minnesota Rules 5200.1106, Subpart 10
[22] 29 CFR Part 5.5(a)(6)
[23] Required Contract Provisions Federal-Aid Construction Contracts Form-1273, Section V, Subpart 2(a)

F. At the end of each pay period, each contractor shall provide every employee, in writing, an accurate detailed earnings statement.[24]

G. Upon request from the U.S. Department of Labor (U.S. DOL), Federal Highway Administration (FHWA), Minnesota Department of Labor and Industry (MN/DLI) or the Department, the prime contractor shall promptly furnish copies of payroll records for its workers and those of all subcontractors, along with other records, deemed appropriate by the requesting agency to determine compliance with these contract provisions.[25]

H. At the department's discretion, the project engineer may administer the submission of payroll records according to MN/DOT's Payroll Maintenance Program. The guidelines for the implementation and administration of this program are outlined in the **MN/DOT Contract Administration Manual, Section A(4)(d)**. The program has not been approved for federal-aid contracts administered by local units of government and will not be allowed for such contracts. However, the program may be utilized for local state-aid contracts.

I. If, after written notice, the prime contractor fails to submit its payroll reports and certification forms and those of any subcontractor, the department may implement the actions prescribed in section **XVI (NON-COMPLIANCE AND ENFORCEMENT).**

V. WAGE RATES

A. The prime contractor is responsible to ensure that its workers and those of all subcontractors are compensated according to the U.S. DOL federal general decision(s) and the MN/DLI state prevailing wage determination(s) incorporated into and found elsewhere in this contract, **whichever is greater**. All contractors shall pay each worker the required minimum total hourly wage rate for all hours worked on the project and for the appropriate classification of labor.

1. Federal building, heavy and highway general decisions are specific to the county in which the construction work is being performed; a decision does not cross county or state lines.[26] If a project extends into more than one county or state, the applicable wage decision for each county or state shall be incorporated into and found elsewhere in this contract.

2. State highway and heavy wage determinations are specific to ten separate regions throughout the state of Minnesota. If a project extends into more than one region, the applicable wage decision for each region shall be incorporated into and found elsewhere in this contract.

   a. If this contract contains multiple highway and heavy wage determinations, there shall be only one standard of hours of labor and wage rates.[27]

3. State commercial wage determinations are specific to the county in which the construction work is being performed. If a project extends into more than one county, the applicable wage determination for each county shall be incorporated into and found elsewhere in this contract.

   a. If this contract contains multiple commercial wage determinations, there shall be only one standard of hours of labor and wage rates.[28]

B. Wage rates listed in the federal and/or state wage determination(s) contain two components: the hourly basic rate and the fringe rate; together they equal the total prevailing wage rate. A

[24] Minnesota Statute 181.032
[25] Minnesota Statute 177.44, Subdivision 7 and Minnesota Rules 5200.1106, Subpart 10
[26] 29 CFR Part 1.7(a)
[27] Minnesota Statute 177.44, Subdivision 4
[28] Minnesota Statute 177.44, Subdivision 4

contractor shall compensate a worker at a minimum, a combination of cash and fringe benefits equaling the total prevailing wage rate.[29]

C. The applicable certified wage decisions incorporated into and found elsewhere in this contract remain in effect for the life of this contract. The wage decisions do not necessarily represent the workforce that can be obtained at the rates certified by the U.S. DOL or MN/DLI. It is the responsibility of the prime contractor and any subcontractor to inform themselves about local labor conditions and prospective changes or adjustments to the wage rates. No increase in this contract price shall be allowed or authorized due to wage rates that exceed those incorporated into this contract.

D. A contractor shall not reduce a worker's private, regular rate of pay when the wage rate certified by the U.S. DOL or MN/DLI is less than the worker's normal hourly wage.[30]

E. From the time a worker is required to report for duty at the project site until the worker is allowed to leave the site, no deductions shall be made from the worker's hours for any delays of less than twenty consecutive minutes.[31]

1. In situations where a delay may exceed twenty consecutive minutes and the contractor requires a worker to remain on the premises or so close to the premises that the worker cannot use the time effectively for the worker's own purposes, the worker is considered "on-call"[32] and shall be compensated in accordance with **Subpart B** of this section, unless the worker is allowed or required to leave the project site.

F. A contractor making payment to an employee, laborer, mechanic, worker, or truck owner-operator shall not accept a rebate for the purpose of reducing or otherwise decreasing the value of the compensation paid.[33]

G. Any employee who knowingly permits a contractor to pay less than the total prevailing wage or gives up any part of the compensation to which the employee is entitled may be subject to penalties.[34]

VI. BONA FIDE FRINGE BENEFITS

A. A "funded" fringe benefit plan is one that allows the contractor to make irrevocable contributions on behalf of an employee to a financially responsible trustee, third person, fund, plan or program, without prior approval from the U.S. Department of Labor. Types of "funded" fringe benefits may include, but are not limited to: pension, health and life insurance.[35]

B. An "unfunded" fringe benefit plan or program is one that allows the contractor to furnish an in-house benefit on behalf of an employee. The cost to provide the benefit is funded from the contractor's general assets rather than funded by contributions made to a trustee, third person, fund, plan or program. Types of "unfunded" fringe benefits may include, but are not limited to: holiday plans, vacation plans and sick plans.[36]

C. Credit toward the total prevailing wage rate shall be determined for each individual employee and is allowed for bona fide fringe benefits that:[37]

1. include contributions irrevocably made by a contractor on behalf of an employee to a financially responsible trustee, third person, fund, plan, or program;

[29] Minnesota Statute 177.42, Subdivision 6
[30] Minnesota Statute 181.03, Subdivision 1(2)
[31] Minnesota Rules 5200.0120,Subpart 1
[32] Minnesota Rules 5200.0120, Subpart 2
[33] Minnesota Rules 5200.1106, Subpart 6
[34] Minnesota Statute 177.44, Subdivision 6
[35] 29 CFR Parts 5.26 and 5.27
[36] 29 CFR Part 5.28
[37] 29 CFR Part 5.23

2. are legally enforceable;
3. have been communicated in writing to the employee; and
4. are made available to the employee once he/she has met all eligibility requirements.

D. No credit shall be allowed for benefits required by federal, state or local law, such as: worker's compensation, unemployment compensation, and social security contributions.[38]

E. Upon request from the Minnesota Department of Labor and Industry (MN/DLI) or the Department, the prime contractor shall promptly furnish copies of fringe benefit records for its workers and those of all subcontractors, along with other records, deemed appropriate by the requesting agency to determine compliance with these contract provisions.[39]

F. In addition to the requirements set forth in **Subpart C** of this section, it is the responsibility of the prime contractor and any subcontractor to inform themselves about other federal and state fringe benefit regulations that may be applicable to this contract.

G. Contractors shall submit a completed and signed **MN/DOT, 21658 - Statement of Compliance Form,** identifying any fringe contributions made on behalf of a worker.[40] The form must be submitted in accordance with section **IV (PAYROLLS AND STATEMENTS), Subparts A and C.**

H. Pursuant with ***Minnesota Statute 181.74, Subdivision 1***, a contractor that is obligated to deposit fringe benefit contributions on behalf of its employees into a financially responsible trustee, third person, fund, plan, or program and fails to make timely contributions may be guilty of a gross misdemeanor. A contractor found in violation of the above-mentioned statute shall compel the department to take such actions as prescribed in section **XVI, (NON-COMPLIANCE AND ENFORCEMENT).**

VII. OVERTIME

A. A contractor shall not permit or require a worker to work in excess of 40 hours per week unless the worker is compensated at a rate not less than 1-1/2 times the basic hourly rate as determined by the United States Secretary of Labor.[41]

B. A contractor shall not permit or require a worker to work longer than the prevailing hours of labor unless the worker is paid for all hours in excess of the prevailing hours at a rate of at least 1-1/2 times the hourly basic hourly rate of pay.[42] The prevailing hours of labor is defined as not more than 8 hours per day or more than 40 hours per week.[43]

C. In addition to the requirements set forth in **Subparts A and B** of this section, it is the responsibility of the prime contractor and any subcontractor to inform themselves about other federal and state overtime regulations that may be applicable to this contract.

VIII. LABOR CLASSIFICATIONS

A. All contractors shall refer to the federal general decision or the state wage determination incorporated into and found elsewhere in this contract to obtain an applicable job classification. Workers must be classified and compensated for the actual work performed regardless of the worker's skill level.[44] The prime contractor shall ensure that all contractors adhere to the following requirements:

---

[38] 29 CFR Part 5.29(f)
[39] Minnesota Statute 177.44, Subdivision 7 and Minnesota Rules 5200.1106, Subpart 10
[40] Minnesota Rules 5200.1106, Subpart 10
[41] Required Contract Provisions Federal-Aid Construction Contracts Form-1273, Section IV, Subpart 7
[42] Minnesota Statute 177.44, Subdivision 1
[43] Minnesota Statute 177.42, Subdivision 4
[44] Required Contract Provisions Federal-Aid Construction Contracts Form-1273, Section IV, Subpart 1(a)

1. Prior to performing work under this contract, all contractors shall review the federal general decision and complete a **U.S. DOL, SF-1444 - Request for Authorization of Additional Classification and Wage Rate Form** for any labor classification missing from the decision and submit it to the MN/DOT Labor Compliance Unit for processing.[45]

2. If a contractor cannot determine an appropriate job classification, state law requires that the worker be assigned a job classification that is the "same or most similar".[46] Contractors should refer to the Master Job Classification List[47] to obtain an applicable labor classification. Clarification regarding labor classifications should be directed to the MN/DLI or the MN/DOT Labor Compliance Unit.

IX. INDEPENDENT CONTRACTORS, OWNERS, SUPERVISORS AND FOREMAN

A. An independent contractor performing work as a laborer or mechanic is subject to the contract prevailing wage requirements[48] for the classification of work performed and shall adhere to the requirements established in sections **IV (PAYROLLS AND STATEMENTS); V (WAGE RATES); VI (FRINGE BENEFITS); VII (OVERTIME) and VIII (LABOR CLASSIFICATIONS)**. In order to ensure compliance, the department may examine the subcontract agreement to determine if the bid price submitted covers the applicable prevailing wage rate for the number of hours worked, along with other records, deemed appropriate by the department.[49]

B. Pursuant with state regulations, owners, supervisors and foreman performing work under the contract[50] shall be compensated in accordance with section **V (WAGE RATES)**. Furthermore, the prime contractor and any subcontractor shall adhere to the requirements established in sections **IV (PAYROLLS AND STATEMENTS); VI (FRINGE BENEFITS); VII (OVERTIME) and VIII (LABOR CLASSIFICATIONS)**.

C. Pursuant with federal regulations, the contract labor provisions do not apply to owners, supervisors or foreman whose duties are primarily associated with bona fide administrative, executive or clerical positions. These individuals are not deemed to be laborers or mechanics.[51]

1. However, working owners, supervisors and/or foreman who devote more than 20 percent of their time during a workweek to laborer or mechanic duties are considered laborers or mechanics for the time so spent and are subject to the requirements established in sections **IV (PAYROLLS AND STATEMENTS); V (WAGE RATES); VI (FRINGE BENEFITS); VII (OVERTIME) and VIII (LABOR CLASSIFICATIONS)**.

X. APPRENTICES, TRAINEES AND HELPERS

A. An apprentice is not subject to the federal and/or state wage decisions incorporated into and found elsewhere in this contract, provided the contractor can demonstrate compliance with **Subparts (1 - 4)** of this section:[52]

1. The apprentice is performing the work of his/her trade.

2. The apprentice is registered with the U.S. DOL Bureau of Apprenticeship and Training or MN/DLI Division of Voluntary Apprenticeship.

3. The apprentice is compensated according to the rate specified in the program for the level of progress.

---

[45] Required Contract Provisions Federal-Aid Construction Contracts Form-1273, Section IV, Subpart 2
[46] Minnesota Statute 177.44, Subdivision 1
[47] Minnesota Rules 5200.1100
[48] 29 CFR Part 5.2(o) and Minnesota Statute 177.41
[49] Minnesota Statute 177.44, Subdivision 7 and Minnesota Rules 5200.1106, Subpart 10
[50] Minnesota Statute 177.44, Subdivision 1
[51] 29 CFR Part 5.2(m)
[52] Minnesota Rules 5200.1070

4. The ratio of apprentices to journeyman workers on the project is not greater than the ratio permitted for the contractor's entire work force under the registered program.[53]

B. A trainee is not subject to the federal general decision incorporated into and found elsewhere in this contract, provided the contractor can demonstrate compliance with **Subparts (1 - 4)** of this section: [54]

1. The trainee is performing the work of his/her trade.

2. The trainee is registered with the U.S. DOL Employment and Training Administration.

3. The trainee is compensated according to the rate specified in the program for the level of progress.

4. The ratio of trainees to journeyman workers on the project is not greater than the ratio permitted under the program.

5. All hours worked in excess of the prescribed hours allowed under the program and/or this contract shall be paid at the journeyman wage rate incorporated into and found elsewhere in this contract.

6. A trainee is not exempt under state law; the contractor shall assign the trainee a job classification that is the "same or most similar"[55] and compensate the trainee for the actual work performed regardless of the trainee's skill level, unless the trainee is:[56]

a. employed and registered in a bona-fide apprenticeship program; or

b. employed in the first 90 days of probationary employment as an apprentice, is not registered in the apprenticeship program, but has been certified by the proper government authorities to be eligible for probationary employment as an apprentice.

C. A helper may perform work only if the helper classification is specified and defined in the federal general decision incorporated into and found elsewhere in this contract or is approved pursuant to the federal conformance procedure:[57]

1. A helper is not exempt under state law; a contractor shall assign the helper a job classification that is the "same or most similar"[58] and compensate the helper for the actual work performed regardless of the helper's skill level.[59]

D. If a contractor fails to demonstrate compliance with the terms established in **Subparts A - C** of this section, the contractor shall compensate the worker not less than the applicable total prevailing wage rate for the actual work performed.[60]

XI. SUBCONTRACTING PART OF THIS CONTRACT[61]

A. If the prime contractor intends to sublet any portion of this contract, it shall complete and submit a **MN/DOT, TP-21834, Request To Sublet Form** to the project engineer 10 days prior to the first day of work for any subcontractor.

B. The prime contractor shall not subcontract any portion of this contract without prior written consent from the project engineer.

---

[53] MN/DOLI Division of Apprenticeship – April 6, 1995 Memorandum from Jerry Briggs, Director
[54] Required Contract Provisions Federal-Aid Construction Contracts Form-1273, Section IV, Subpart 4(b)
[55] Minnesota Statute 177.44, Subdivision 1
[56] Required Contract Provisions Federal-Aid Construction Contracts Form-1273, Section IV, Subpart 1(a)
[57] Required Contract Provisions Federal-Aid Construction Contracts Form-1273, Section IV, Subpart 4(c)
[58] Minnesota Statute 177.44, Subdivision 1
[59] Required Contract Provisions Federal-Aid Construction Contracts Form-1273, Section IV, Subpart 1(a)
[60] Required Contract Provisions Federal-Aid Construction Contracts Form-1273, Section IV, Subpart 4(a)(b)(c)
[61] MN/DOT Standard Specifications for Construction, Section 1801

C. The prime contractor's organization shall perform work amounting to not less than 40 percent of the total original contract cost. However, contracts with Disadvantaged Business Enterprise (DBE) or Targeted Group Business (TGB) established goals, or both, the contractor's organization shall perform work amounting to not less than 30 percent of the total original contract cost.

D. A first tier subcontractor shall not subcontract any portion of its work under this contract unless approved by the prime contractor and the project engineer. In addition, a first tier subcontractor may only subcontract up to 50% of its original subcontract.

E. A second tier subcontractor shall not subcontract any portion of its work under this contract.

F. Written consent to subcontract any portion of this contract does not relieve the prime contractor of liabilities and obligations under the contract and bonds.

G. Contractors shall not subcontract with or purchase materials or services from a debarred or suspended person.[62]

XII. POSTER BOARDS

A. The prime contractor shall construct and display a poster board, which contains all required posters, is legible and is accessible to all workers from the first day of work until the project is 100 percent complete.[63] The prime contractor is not allowed to place a poster board at an off-site location.

1. The prime contractor can obtain the required posters by contacting MN/DOT at (651) 366-3091. The prime contractor will need to furnish its name, mailing address, the type of posters (federal-aid) and the quantity needed.

XIII. EMPLOYEE INTERVIEWS

A. At any time the prime contractor shall permit representatives from the U.S. DOL, FHWA, MN/DLI, or the Department to interview its workers and those of any subcontractor during working hours on the project.[64]

XIV. TRUCKING / OFF-SITE FACILITIES

A. The prime contractor is responsible to ensure that its workers and those of all subcontractors are compensated in accordance with the federal wage decision incorporated into and found elsewhere in this contract for the following work duties:

1. The processing or manufacturing of material, including the hauling of material to and from an immediately adjacent, dedicated off-site facility.[65]

2. The hauling of any or all stockpiled or excavated materials on the project work site to other locations on the same project.[66]

B. The prime contractor is responsible to ensure that its workers and those of all subcontractors, are compensated in accordance with the state wage determination incorporated into and found elsewhere in this contract for the following work duties:

1. The processing or manufacturing of material, including the hauling of material to and from a prime contractor's material operation that is not a separate commercial establishment.[67]

---

[62] Minnesota Statute 161.315, Subdivision 3(3)
[63] Required Contract Provisions Federal-Aid Construction Contracts Form-1273, Section IV, Subpart 1(a)
[64] Required Contract Provisions Federal-Aid Construction Contracts Form-1273, Section V, Subpart 2(g)
[65] 29 CFR Part 5.2(l)(2)
[66] 29 CFR Part 5.2(j)(1)
[67] ALJ Findings of Fact, Conclusions of Law, and Recommendation, Conclusions (7), Case #12-3000-11993-2

2. The processing or manufacturing of material, including the hauling of material to and from an off-site material operation that is not considered a commercial establishment.[68]

3. The hauling of any or all stockpiled or excavated materials on the project work site to other locations on the same project even if the truck leaves the work site at some point.[69]

4. The delivery of materials from a non-commercial establishment to the project and the return haul.[70]

5. The delivery of materials from another construction project site to the public works project and the return haul, either empty or loaded. Construction projects are not considered commercial establishments.[71]

6. The hauling required to remove any materials from the project to a location off the project site and the return haul, either empty or loaded from other than a commercial establishment.[72]

7. The delivery of mineral aggregate materials from a commercial establishment, which is deposited "substantially in place" and the return haul, either empty or loaded.[73]

C. The work duties prescribed in **Subpart A (1 - 2) and Subpart B (1 - 7)** of this section do not represent all possible hauling activities and/or other work duties that may be performed under this contract. It is the responsibility of the prime contractor to inform itself and all subcontractors about other applicable job duties that may be subject to this contract labor provisions.

D. A contractor acquiring trucking services from an ITO, MTO and/or Truck Broker to perform and/or provide "covered" hauling activities shall comply with the payment of the certified state truck rental rates,[74] which are incorporated into and found elsewhere in this contract.

1. Each month, in which hauling activities were performed under this contract, the prime contractor and all subcontractors shall submit a **MN/DOT, TP-90550 - Month-End Trucking Report** and **MN/DOT, TP-90551 - Statement of Compliance Form**, along with each ITOs, MTOs and/or Truck Brokers reports to the department.[75] The specifications regarding the dates for submission can be found near the bottom of the **MN/DOT, TP-90551 - Statement of Compliance Form.**

E. A Truck Broker contracting to provide trucking services in the construction industry may charge a reasonable broker fee to the provider of trucking services.[76] The prime contractor and any subcontractor contracting to receive trucking services shall not assess a broker fee.

F. A contractor with employee truck drivers shall adhere to the requirements established in **Sections IV (PAYROLLS AND STATEMENTS); V (WAGE RATES); VI (FRINGE BENEFITS); VII (OVERTIME) and VIII (LABOR CLASSIFICATIONS).**

G. If after written notice, the prime contractor fails to submit its month-end trucking reports and certification forms and those of any subcontractor, MTO and/or Truck Broker, the department may take such actions as prescribed in section **XVI, (NON-COMPLIANCE AND ENFORCEMENT).**

[68] Minnesota Rules 5200.1106, Subpart 3B(2)
[69] Minnesota Rules 5200.1106, Subpart 3B(1)
[70] Minnesota Rules 5200.1106, Subpart 3B(2)
[71] Minnesota Rules 5200.1106, Subpart 3B(3)
[72] Minnesota Rules 5200.1106, Subpart 3B(4)
[73] Minnesota Rules 5200.1106, Subpart 3B(5)(6)
[74] Minnesota Rules 5200.1106, Subpart 1
[75] Minnesota Rules 5200.1106, Subpart 10
[76] Minnesota Rules 5200.1106, Subpart 7(C)

XV. CHILD LABOR

A. No worker under the age of 18 is allowed to perform work on construction projects.[77]

B. In accordance with state law, a worker under the age of 18, employed in a corporation totally owned by one or both parents that is supervised by the parent(s), may perform work on construction projects.[78] However, if this contractor is subject to the federal Fair Labor Standards Act, a worker under the age of 18 is not allowed to perform work in a hazardous occupation.[79]

C. To protect the interests of the department, the project engineer may remove a worker that appears to be under the age of 18 from the construction project until the contractor or worker can demonstrate proof of age[80] and compliance with all applicable federal and/or state regulations.[81]

XVI. NON-COMPLIANCE AND ENFORCEMENT

A. The prime contractor shall be liable for any unpaid wages to its workers or those of any subcontractor, ITO, MTO and/or Truck Broker.[82]

B. If it is determined that a contractor has violated federal and/or state prevailing wage laws, or any portion of this contract, the department may implement, after written notice, one or more of the following sanctions:

1. Withhold or cause to be withheld from the prime contractor under this contract, or any other federally funded contract with the same prime contractor, as much of the accrued payments or advances as may be considered necessary to pay workers employed by the prime contractor or any subcontractor the full amount of wages required by this contract.[83]

2. Withhold or cause to be withheld from the prime contractor such amounts in considerations or assessments against the prime contractor, whether arising from this contract or other contract with the department.[84]

3. The department may <u>reject a bid</u> from a prime contractor that has demonstrated continued or persistent noncompliance with the prevailing wage law on previous or current contracts with the department.[85]

4. The department may take the prosecution of the work out of the hands of the prime contractor, place the contractor in default and terminate this contract for failure to demonstrate compliance with these provisions.[86]

C. Any contractor who violates the state prevailing wage law is guilty of a misdemeanor and may be fined not more than $300 or imprisoned not more than 90 days or both. Each day that the violation continues is a separate offense.[87]

D. All required documents and certification reports are legal documents; willful falsification of the documents may result in civil action and/or criminal prosecution[88] and may be grounds for debarment proceedings.[89]

---

[77] Minnesota Rules 5200.0910, Subpart F
[78] Minnesota Rules 5200.0930, Subpart 4
[79] 29 CFR Part 570.2(a)(ii)
[80] Minnesota Statute 181A.06, Subdivision 4
[81] MN/DOT Standard Specifications for Construction, Section 1701
[82] MN/DOT Standard Specifications for Construction, Section 1801
[83] Required Contract Provisions Federal-Aid Construction Contracts Form-1273, Section IV, Subpart 6
[84] MN/DOT Standard Specifications for Construction, Section 1906
[85] Minnesota Statute 161.32, Subdivision 1(d)
[86] MN/DOT Standard Specifications for Construction, Section 1808
[87] Minnesota Statute 177.44, Subdivision 6
[88] Minnesota Statutes 16B, 161.315, Subdivision 2, 177.43,Subdivision 5 177.44, Subdivision 6, 609.63
[89] Minnesota Statute 161.315

NOTICE TO BIDDERS

TRAFFIC CONTROL
PREVAILING WAGE COVERAGE

The following defines the United States Department of Labor's interpretation of contract labor provision coverage for employees who work for traffic control companies and /or perform traffic control duties.

Non-covered Supplier Designated Duties:

Employees of bona fide "Material Persons/Suppliers" are not covered. A Material Person/Supplier is limited to supply, delivery, and routine maintenance (once a week) of barricades, cones, flashers, etc. to the job site.

The following functions, except as qualified in "6." below, do not come under the prevailing wage requirements of the contracts:

1. Supply and delivery of traffic control devices such as barricades, cones, barrels, flashers and signboards.

2. Routine and periodic maintenance service (usually once a week).

3. Removal of equipment from job site.

4. In connection with delivery, they may drop the equipment at a central stockpile location or at various locations along the project. Employees of company may set-up the equipment as long as such set-up is by dropping barrels and cones from the back of a moving truck.

5. Maintenance would consist of inspecting and cleaning the equipment, replacing broken or lost equipment, replacing barricades knocked down or out of line, and changing light bulbs and barricades.

6. If an employee spends more than 20% of their workweek performing the above duties on a Davis-Bacon (Federal-Aid) project or other Davis-Bacon (Federal-Aid) projects, prevailing wage rates would apply for the time so spent.

Covered Contractor or Subcontractor Duties:

The following functions are covered under the contract labor provisions. Any contractor performing these duties will need to be listed on a Request to Sublet form and their employees performing the duties will need to be listed on a Certified Payroll form and submitted following the appropriate procedures.

Related and continuing traffic control services such as, but not limited to:

1. Moving barricades and barriers as construction work progresses.
2. Moving barricades for lane closures and changes.
3. Painting traffic lines.
4. Sandblasting to remove traffic lines.
5. Applying and removing traffic tape.
6. Setting up barrels or barricades other than those dropped from the back of a moving truck.
7. Digging postholes to erect temporary warning signs (only).
8. Erection of advance temporary warning signs.
9. Placing temporary signboards.

On Federal-aid Projects (only) when there is no appropriate classification listed under either the state or federal wage determinations, a classification wage rate will be negotiated using the procedures under FHWA 1273, REQUIRED CONTRACT PROVISIONS FEDERAL-AID CONSTRUCTION CONTRACTS, Part IV. PAYMENT OF PREDERTERMINED MINIMUM WAGE, Subp. 2. Classifications.

General Decision Number: MN120010 06/15/2012 MN10

Superseded General Decision Number: MN20100020

State: Minnesota

Construction Type: Highway

Counties: Anoka, Carver, Chisago, Dakota, Hennepin, Ramsey, Scott and Washington Counties in Minnesota.

HIGHWAY CONSTRUCTION PROJECTS

Modification Number	Publication Date
0	01/06/2012
1	06/15/2012

* SUMN2010-009 10/31/2011

	Rates	Fringes
BRICKLAYER	$ 31.66	17.38
CARPENTER	$ 32.54	17.53
CEMENT MASON/CONCRETE FINISHER	$ 32.80	17.00
ELECTRICIAN		
Electrician	$ 35.55	22.86
Ground Person	$ 24.15	12.13
Lineman	$ 36.04	15.64
Wiring System Installer	$ 22.46	10.61
Wiring System Technician	$ 32.09	12.39
IRONWORKER	$ 34.05	20.37
LABORER		
Blaster	$ 29.82	15.72
Common or General	$ 26.82	15.72
Flag Person	$ 26.82	15.72
Landscape	$ 17.44	12.09
Skilled	$ 26.82	15.72
Traffic Control Person	$ 26.82	15.72
Underground & Open Ditch (8 ft below grade)	$ 27.52	15.72
MILLWRIGHT	$ 30.90	19.52
PAINTER (Including Pavement Marking)	$ 30.45	17.45
PILEDRIVERMAN	$ 32.49	17.58
POWER EQUIPMENT OPERATOR:		
GROUP 2	$ 31.97	16.70
GROUP 3	$ 31.42	16.70
GROUP 4	$ 31.12	16.70
GROUP 5	$ 28.08	16.70
GROUP 6	$ 26.87	16.70

Speciality Equipment
Articulated Hauler.....$ 31.12 16.70
Boom Truck.....$ 31.12 16.70
Landscaping Equipment.....$ 17.44 12.09
Off-Road Truck.....$ 31.12 16.70

OPERATING ENGINEER CLASSIFICATIONS

GROUP 2: Helicopter Pilot; Concrete Pump; Cranes over 135 ft boom excluding jib; Dragline, Crawler, Hydraulic Backhoe and other similar equpment with shovel-type controls including attachments 3 cu yd & over; Grader or Motor Patrol; Pile Driving

GROUP 3: Asphalt Bituminous Stabilizer Plant; Cableway; Concrete Mixer, Stationary Plant; Derrick (guy or stiff leg)(power)(skids or stationary); Dragline, Crawler, Hydraulic Backhoe and other similar equpment with shovel-type controls including attachments up to 3 cu yd; Dredge or Engineers Dredge (Power); Front end loader 5 cu yd & over including attachments; Locomotive Crane Operator; Mixer (paving) concrete paving, Road Mole including Mucking operations, Conway or similar type; Mechanic, Welder; Tractor, Boom type. Tandem Scraper; Truck Crane, Crawler Crane; Tugboat 100 H.P. & over.

GROUP 4: Air Track Rock Drill; Automatic Road Machine CMI or similar; Backfiller; Concrete Batch Plant; Bituminous Roller Rubber Tire or Steel Drum 8 tons & over; Bituminous Spreader & Finishing Machine (power), including pavers, Macro Surfacing & Micro Surfacing or similar types (Operator & Screed person); Brokk or RTC remote control or similar type with attachments; Cat Challenger Tractor or similar types pulling Rock Wagons; Bulldozer & Scraper; Chip Harvester & Tree Cutter; Concrete Distributor & Spreader Finishing Machine, Longitudinal Float, Joint Machine, Spray Machine; Concrete Mixer on jobsite; Concrete Mixer; Crusing Plant (gravel, stone) or Gravel Washing, Crushing & Screening Plant; Curb Machine; Directional Boring Machine; Drill Rigs, Heavy Rotary or Churn or Cable Drill; Dual Tractor; Elevating Grader; Fork Lift; Front End, Skid Steer 1 to 5 cu yd; GPS Remote Operating of equpment; Hoist Engineer (power); Hydraulic Tree Planter; Launcher Person; Locomotive; Milling, Grinding, Planing, Fine Grade, or Trimmer Machine; Multiple Machines such as Air Comressors, Welding Machines, Generators, Pumps; Pavement Breaker or Tamping Machine, Mighty Mite or similar type; Pickup Sweeper 1 cu yd & over hopper capacity; Horizontal Boring Machine power actuated over 6 inches; Pugmill; Pumpcrete; Rubber Tired Farm Tractor with Backhoe attachment; Scraper; Self-Propelled Soil Stabilizer; Slip Form (power driven) paving; Tractor, Bulldozer; Wheel type Tractor over 50 hp with PTO; Trenching Machine excludes walk behind Trencher; Tub Grinder, Morbark or similar type; Well Point installation or Dismantling.

GROUP 5: Air Compressor 600 cfm or over; Bituminous Roller under 8 tons; Concrete Saw multiple blade; Form Tench Digger (power); Front End Skid Steer up to 1 cu yd; Gunite Gunall; Hydraulic Log Splitter; Loader, Barber Greene or similar; Post Hole Driving Machine/Post Hole Auger; Power Actuated Auger & Boring Machine; Power Actuated Jack; Pump; Self-Propelled Chip Spreader (Flaherty or similar); Sheep Foot Compactor with

blade 200 hp & over; Shouldering Machine (Power) APSCO or similar type including self-propelled Sand and Chip Spreader; Stump Chipper and Tree Chipper; Tree Farmer (Machine).

GROUP 6: Cat, Challenger or siliar tractor when pulling Disk or Roller; Conveyor; Dredge Deck Hand; Fire Person or Tank Car Heater; Gravel Screening Plant (portable, not crushing or washing); Greaser (tractor); Lever Person; Oiler (Power Shovel, Truck Crane, Dragline, Crusher and Milling Mazchine; Power Sweeper; Sheep Foot Roller & Rollers on Gravel Compaction including vibrating rollers; Wheel type Tractor over 50 hp.

TRUCK DRIVER

GROUP 1	$ 27.50	13.65
GROUP 2	$ 26.95	13.65
GROUP 3	$ 26.85	13.65
GROUP 4	$ 26.60	13.65

TRUCK DRIVER CLASSIFICATIONS:

GROUP 1: Mechanic, Welder; Tractor Trailer; Truck hauling machinery including operation of hand and power operated winches.

GROUP 2: Four or more axle unit straight body truck.

GROUP 3: Bituminouos Distributor driver; Bituminous Distributor (one person operation); Three Axle units.

GROUP 4: Bituminous Distributor Spray operator (rear and oiler); Dump Person; Greaser; Pilot Car; Rubber Tire self-propelled Packer under 8 tons; Two Axle unit; Slurry Operator; Tank Truck Tender (gas, road oil, water); Tractor under 50 hp.

Tunnel Miner	$ 27.52	15.72

WELDERS - Receive rate prescribed for craft performing operation to which welding is incidental.

==========

Unlisted classifications needed for work not included within the scope of the classifications listed may be added after award only as provided in the labor standards contract clauses (29CFR 5.5 (a) (1) (ii)).

The body of each wage determination lists the classification and wage rates that have been found to be prevailing for the cited type(s) of construction in the area covered by the wage determination. The classifications are listed in alphabetical order of "identifiers" that indicate whether the particular rate is union or non-union.

Union Identifiers

An identifier enclosed in dotted lines beginning with characters other than "SU" denotes that the union classification and rate have found to be prevailing for that classification. Example: PLUM0198-005 07/01/2011. The first four letters , PLUM, indicate the international union and the four-digit number, 0198, that follows indicates the local union number or district council number where applicable , i.e., Plumbers Local 0198. The next number, 005 in the example, is an internal number used in processing the wage determination. The date, 07/01/2011, following these characters is the effective date of the most current negotiated rate/collective bargaining agreement which would be July 1, 2011 in the above example.

Union prevailing wage rates will be updated to reflect any changes in the collective bargaining agreements governing the rate.

Non-Union Identifiers

Classifications listed under an "SU" identifier were derived from survey data by computing average rates and are not union rates; however, the data used in computing these rates may include both union and non-union data. Example: SULA2004-007 5/13/2010. SU indicates the rates are not union rates, LA indicates the State of Louisiana; 2004 is the year of the survey; and 007 is an internal number used in producing the wage determination. A 1993 or later date, 5/13/2010, indicates the classifications and rates under that identifier were issued as a General Wage Determination on that date.

Survey wage rates will remain in effect and will not change until a new survey is conducted.

WAGE DETERMINATION APPEALS PROCESS

1.) Has there been an initial decision in the matter? This can be:

* an existing published wage determination
* a survey underlying a wage determination
* a Wage and Hour Division letter setting forth a position on a wage determination matter
* a conformance (additional classification and rate) ruling

On survey related matters, initial contact, including requests for summaries of surveys, should be with the Wage and Hour Regional Office for the area in which the survey was conducted because those Regional Offices have responsibility for the Davis-Bacon survey program. If the response from this initial contact is not satisfactory, then the process described in 2.) and 3.) should be followed.

With regard to any other matter not yet ripe for the formal process described here, initial contact should be with the Branch of Construction Wage Determinations. Write to:

Branch of Construction Wage Determinations
Wage and Hour Division
U.S. Department of Labor
200 Constitution Avenue, N.W.
Washington, DC 20210

2.) If the answer to the question in 1.) is yes, then an interested party (those affected by the action) can request review and reconsideration from the Wage and Hour Administrator (See 29 CFR Part 1.8 and 29 CFR Part 7). Write to:

Wage and Hour Administrator
U.S. Department of Labor
200 Constitution Avenue, N.W.
Washington, DC 20210

The request should be accompanied by a full statement of the interested party's position and by any information (wage payment data, project description, area practice material, etc.) that the requestor considers relevant to the issue.

3.) If the decision of the Administrator is not favorable, an interested party may appeal directly to the Administrative Review Board (formerly the Wage Appeals Board). Write to:

Administrative Review Board
U.S. Department of Labor
200 Constitution Avenue, N.W.
Washington, DC 20210

4.) All decisions by the Administrative Review Board are final.

==========

END OF GENERAL DECISION

General Decision Number: MN120100 07/06/2012 MN100

Superseded General Decision Number: MN20100134

State: Minnesota

Construction Type: Heavy
Heavy including Water and Sewer Lines

Counties: Dakota and Ramsey Counties in Minnesota.

HEAVY CONSTRUCTION PROJECTS (including sewer/water construction).

Modification Number	Publication Date
0	01/06/2012
1	03/02/2012
2	05/04/2012
3	06/01/2012
4	07/06/2012

CARP0087-007 05/01/2011

	Rates	Fringes
CARPENTER (Including Form Work)	$ 33.09	16.48

ELEC0110-014 01/01/2011

	Rates	Fringes
ELECTRICIAN	$ 35.55	22.86

ENGI0049-064 05/01/2011

	Rates	Fringes
OPERATOR: Power Equipment		
Group 2	$ 31.82	16.60
Group 3	$ 31.27	16.60
Group 4	$ 30.97	16.60
Group 5	$ 27.93	16.60
Group 6	$ 26.72	16.60

POWER EQUIPMENT OPERATOR CLASSIFICATIONS

GROUP 2: Crane with over 135' Boom, excluding jib; Dragline & Hydraulic Backhoe with shovel-type controls, 3 cubic yards and over; Grader/Blade finishing earthwork and bituminous.

GROUP 3: Dragline & Hydraulic Backhoe with shovel-type controls up to 3 cubic yards; Loader 5 cu yd and over; Mechanic; Tandem Scraper; Truck Crane; Crawler Crane

GROUP 4: Bituminous Roller 8 tons & over; Crusher/Crushing Plant; Drill Rig; Elevating Grader; Loader over 1 cu yd; Grader; Pump; Scraper up; to 32 cu yd; Farm Tractor with

Backhoe attachment; Skid Steer Loader over 1 cu yd with Backhoe attachment; Bulldozer over 50 hp.

GROUP 5: Bituminous Roller under 8 tons; Bituminous Rubber Tire Roller; Loader up to 1 cu yd; Bulldozer 50 hp or less.

GROUP 6: Oiler; Self-Propelled Vibrating Packer 35 hp and over.

CRANE OVER 135' BOOM, EXCLUDING JIB - $ .25 PREMIUM;
CRANE OVER 200' BOOM, EXCLUDING JIB - $ .50 PREMIUM

UNDERGROUND WORK:
UNNELS, SHAFTS, ETC. - $ .25 PREMIUM
UNDER AIR PRESSURE - $ .50 PREMIUM

HAZARDOUS WASTE PROJECTS (PPE Required):
LEVEL A - $1.25 PREMIUM
LEVEL B - $ .90 PREMIUM
LEVEL C - $ .60 PREMIUM

IRON0512-041 05/01/2012

	Rates	Fringes
IRONWORKER, STRUCTURAL AND REINFORCING	$ 34.15	21.20

LABO0132-037 05/01/2011

	Rates	Fringes
LABORER (LANDSCAPE)	$ 18.79	10.05

LABO0563-026 05/01/2011

	Rates	Fringes
LABORERS		
(1) Common or General Laborer; Top Person	$ 28.42	13.23
(2) Mason Tender Cement/Concrete	$ 28.62	13.23
(6) Pipe Layer	$ 30.42	13.23

PLAS0633-004 05/09/2012

	Rates	Fringes
CEMENT MASON/CONCRETE FINISHER	$ 32.80	17.00

---

* PLUM0034-020 06/01/2012

	Rates	Fringes
PLUMBER	$ 39.99	20.81

FOOTNOTE:
Paid Holiday: Labor Day

PLUM0455-013 05/01/2012

	Rates	Fringes
PIPEFITTER	$ 39.70	23.09

TEAM0160-016 05/01/2011

	Rates	Fringes
TRUCK DRIVER (DUMP)		
(1) Articulated Dump Truck	$ 27.10	13.65
(2) 3 Axles/4 Axles; 5 Axles receive $0.30 additional per hour	$ 26.55	13.65
(3) Tandem Axles; & Single Axles	$ 26.45	13.65

WELDERS - Receive rate prescribed for craft performing operation to which welding is incidental.

==========

Unlisted classifications needed for work not included within the scope of the classifications listed may be added after award only as provided in the labor standards contract clauses (29CFR 5.5 (a) (1) (ii)).

The body of each wage determination lists the classification and wage rates that have been found to be prevailing for the cited type(s) of construction in the area covered by the wage determination. The classifications are listed in alphabetical order of "identifiers" that indicate whether the particular rate is union or non-union.

Union Identifiers

An identifier enclosed in dotted lines beginning with characters other than "SU" denotes that the union classification and rate have found to be prevailing for that classification. Example: PLUM0198-005 07/01/2011. The first four letters , PLUM, indicate the international union and the four-digit number, 0198, that follows indicates the local union number or district council number where applicable , i.e., Plumbers Local 0198. The next number, 005 in the example, is an internal number used in processing the wage determination. The date, 07/01/2011, following these characters is the effective date of the most current negotiated rate/collective bargaining agreement which would be July 1, 2011 in the above example.

Union prevailing wage rates will be updated to reflect any changes in the collective bargaining agreements governing the rate.

Non-Union Identifiers

Classifications listed under an "SU" identifier were derived from survey data by computing average rates and are not union rates; however, the data used in computing these rates may include both union and non-union data. Example: SULA2004-007 5/13/2010. SU indicates the rates are not union rates, LA indicates the State of Louisiana; 2004 is the year of the survey; and 007 is an internal number used in producing the wage determination. A 1993 or later date, 5/13/2010, indicates the classifications and rates under that identifier were issued as a General Wage Determination on that date.

Survey wage rates will remain in effect and will not change until a new survey is conducted.

WAGE DETERMINATION APPEALS PROCESS

1.) Has there been an initial decision in the matter? This can be:

* an existing published wage determination
* a survey underlying a wage determination
* a Wage and Hour Division letter setting forth a position on a wage determination matter
* a conformance (additional classification and rate) ruling

On survey related matters, initial contact, including requests for summaries of surveys, should be with the Wage and Hour Regional Office for the area in which the survey was conducted because those Regional Offices have responsibility for the Davis-Bacon survey program. If the response from this initial contact is not satisfactory, then the process described in 2.) and 3.) should be followed.

With regard to any other matter not yet ripe for the formal process described here, initial contact should be with the Branch of Construction Wage Determinations. Write to:

Branch of Construction Wage Determinations
Wage and Hour Division
U.S. Department of Labor
200 Constitution Avenue, N.W.
Washington, DC 20210

2.) If the answer to the question in 1.) is yes, then an interested party (those affected by the action) can request review and reconsideration from the Wage and Hour Administrator (See 29 CFR Part 1.8 and 29 CFR Part 7). Write to:

Wage and Hour Administrator
U.S. Department of Labor
200 Constitution Avenue, N.W.
Washington, DC 20210

The request should be accompanied by a full statement of the

interested party's position and by any information (wage payment data, project description, area practice material, etc.) that the requestor considers relevant to the issue.

3.) If the decision of the Administrator is not favorable, an interested party may appeal directly to the Administrative Review Board (formerly the Wage Appeals Board). Write to:

Administrative Review Board
U.S. Department of Labor
200 Constitution Avenue, N.W.
Washington, DC 20210

4.) All decisions by the Administrative Review Board are final.

==========

END OF GENERAL DECISION

NOTICE TO BIDDERS

Minnesota Statutes that require prompt payment to subcontractors:

471.425 Prompt payment of local government bills.

Subd. 1. Definitions. For the purposes of this section, the following terms have the meanings here given them.

(d) "Municipality" means any home rule charter or statutory city, county, town, school district, political subdivision or agency of local government. "Municipality" means the metropolitan council or any board or agency created under chapter 473.

Subd. 4a. Prompt payment to subcontractors.

Each contract of a municipality must require the prime contractor to pay any subcontractor within ten days of the prime contractor's receipt of payment from the municipality for undisputed services provided by the subcontractor. The contract must require the prime contractor to pay interest of 1-1/2 percent per month or any part of a month to the subcontractor on any undisputed amount not paid on time to the subcontractor. The minimum monthly interest penalty payment for an unpaid balance of $100 or more is $10. For an unpaid balance of less than $100, the prime contractor shall pay the actual penalty due to the subcontractor. A subcontractor who prevails in a civil action to collect interest penalties from a prime contractor must be awarded its costs and disbursements, including attorney's fees, incurred in bringing the action.

HIST: 1985 c 136 s 5; 1995 c 31 s 1

MINNESOTA DEPARTMENT OF LABOR AND INDUSTRY PREVAILING WAGES FOR STATE FUNDED CONSTRUCTION PROJECTS

THIS NOTICE MUST BE POSTED ON THE JOBSITE IN A CONSPICUOUS PLACE

Construction Type: Highway and Heavy

Region Number: 09

Counties within region:

- ANOKA-02
- CARVER-10
- CHISAGO-13
- DAKOTA-19
- HENNEPIN-27
- RAMSEY-62
- SCOTT-70
- WASHINGTON-82

Effective: 2011-10-31 Revised: 2012-07-23

This project is covered by Minnesota prevailing wage statutes. Wage rates listed below are the minimum hourly rates to be paid on this project.

All hours worked in excess of eight (8) hours per day or forty (40) hours per week shall be paid at a rate of one and one half (1 1/2) times the basic hourly rate.

Violations should be reported to:

Department of Transportation
Office of Construction
Transportation Building MS650
John Ireland Blvd
St. Paul, MN 55155
(651) 366-4209

Refer questions concerning the prevailing wage rates to:

Department of Labor and Industry
Prevailing Wage Section
443 Lafayette Road N
St Paul, MN 55155
(651) 284-5091
DLI.PrevWage@state.mn.us

LABOR CODE AND CLASS	EFFECT DATE	BASIC RATE	FRINGE RATE	TOTAL RATE
LABORERS (101 - 112) (SPECIAL CRAFTS 701 - 730)				
101 LABORER, COMMON (GENERAL LABOR WORK)	2011-10-31	26.82	15.47	42.29
	2012-05-01	26.82	15.72	42.54
102 LABORER, SKILLED (ASSISTING SKILLED CRAFT JOURNEYMAN)	2011-10-31	26.82	15.47	42.29
	2012-05-01	26.82	15.72	42.54
103 LABORER, LANDSCAPING (GARDENER, SOD LAYER AND NURSERY OPERATOR)	2011-10-31	17.19	11.59	28.78
	2012-05-01	17.44	12.09	29.53
104 FLAG PERSON	2011-10-31	26.82	15.47	42.29
	2012-05-01	26.82	15.72	42.54
105 WATCH PERSON	2011-10-31	23.42	14.92	38.34
	2012-05-01	23.42	15.17	38.59
106 BLASTER	2011-10-31	29.82	15.47	45.29
	2012-05-01	29.82	15.72	45.54
107 PIPELAYER (WATER, SEWER AND GAS)	2011-10-31	28.82	15.47	44.29
	2012-05-01	28.82	15.72	44.54
108 TUNNEL MINER	2011-10-31	27.52	15.47	42.99
	2012-05-01	27.52	15.72	43.24
109 UNDERGROUND AND OPEN DITCH LABORER (EIGHT FEET BELOW STARTING GRADE LEVEL)	2011-10-31	27.52	15.47	42.99
	2012-05-01	27.52	15.72	43.24
110 SURVEY FIELD TECHNICIAN (OPERATE TOTAL STATION, GPS RECEIVER, LEVEL, ROD OR RANGE	2011-10-31	26.82	15.47	42.29

	POLES, STEEL TAPE MEASUREMENT; MARK AND DRIVE STAKES; HAND OR POWER DIGGING FOR AND IDENTIFICATION OF MARKERS OR MONUMENTS; PERFORM AND CHECK CALCULATIONS; REVIEW AND UNDERSTAND CONSTRUCTION PLANS AND LAND SURVEY MATERIALS). THIS CLASSIFICATION DOES NOT APPLY TO THE WORK PERFORMED ON A PREVAILING WAGE PROJECT BY A LAND SURVEYOR WHO IS LICENSED PURSUANT TO MINNESOTA STATUTES, SECTIONS 326.02 TO 326.15.				
		2012-05-01	26.82	15.72	42.54
111	TRAFFIC CONTROL PERSON (TEMPORARY SIGNAGE)	2011-10-31	26.82	15.47	42.29
		2012-05-01	26.82	15.72	42.54
112	QUALITY CONTROL TESTER (FIELD AND COVERED OFF-SITE FACILITIES; TESTING OF AGGREGATE, ASPHALT, AND CONCRETE MATERIALS); LIMITED TO MN DOT HIGHWAY AND HEAVY CONSTRUCTION PROJECTS WHERE THE MN DOT HAS RETAINED QUALITY ASSURANCE PROFESSIONALS TO REVIEW AND INTERPRET THE RESULTS OF QUALITY CONTROL TESTERS. SERVICES PROVIDED BY THE CONTRACTOR.	2011-10-31	16.28	4.07	20.35

SPECIAL EQUIPMENT (201 - 204)

201	ARTICULATED HAULER	2011-10-31	30.97	16.60	47.57
		2012-05-01	31.12	16.70	47.82
202	BOOM TRUCK	2011-10-31	30.97	16.60	47.57
		2012-05-01	31.12	16.70	47.82
203	LANDSCAPING EQUIPMENT, INCLUDES HYDRO SEEDER OR MULCHER, SOD ROLLER, FARM TRACTOR WITH ATTACHMENT SPECIFICALLY SEEDING, SODDING, OR PLANT, AND TWO-FRAMED FORKLIFT (EXCLUDING FRONT, POSIT-TRACK, AND SKID STEER LOADERS), NO EARTHWORK OR GRADING FOR ELEVATIONS	2011-10-31	17.19	11.59	28.78
		2012-05-01	17.44	12.09	29.53
204	OFF-ROAD TRUCK	2011-10-31	30.97	16.60	47.57

	2012-05-01	31.12	16.70	47.82

HIGHWAY/HEAVY POWER EQUIPMENT OPERATOR

GROUP 2	2011-10-31	31.82	16.60	48.42
	2012-05-01	31.97	16.70	48.67

302 HELICOPTER PILOT (HIGHWAY AND HEAVY ONLY)

303 CONCRETE PUMP (HIGHWAY AND HEAVY ONLY)

304 ALL CRANES WITH OVER 135-FOOT BOOM, EXCLUDING JIB (HIGHWAY AND HEAVY ONLY)

305 DRAGLINE, CRAWLER, HYDRAULIC BACKHOE (TRACK OR WHEEL MOUNTED) AND/OR OTHER SIMILAR EQUIPMENT WITH SHOVEL-TYPE CONTROLS THREE CUBIC YARDS AND OVER MANUFACTURER.S RATED CAPACITY INCLUDING ALL ATTACHMENTS. (HIGHWAY AND HEAVY ONLY)

306 GRADER OR MOTOR PATROL

307 PILE DRIVING (HIGHWAY AND HEAVY ONLY)

308 TUGBOAT 100 H.P. AND OVER WHEN LICENSE REQUIRED (HIGHWAY AND HEAVY ONLY)

GROUP 3	2011-10-31	31.27	16.60	47.87
	2012-05-01	31.42	16.70	48.12

309 ASPHALT BITUMINOUS STABILIZER PLANT

310 CABLEWAY

311 CONCRETE MIXER, STATIONARY PLANT (HIGHWAY AND HEAVY ONLY)

312 DERRICK (GUY OR STIFFLEG)(POWER)(SKIDS OR STATIONARY) (HIGHWAY AND HEAVY ONLY)

313 DRAGLINE, CRAWLER, HYDRAULIC BACKHOE (TRACK OR WHEEL MOUNTED) AND/OR SIMILAR EQUIPMENT WITH SHOVEL-TYPE CONTROLS, UP TO THREE CUBIC YARDS MANUFACTURER.S RATED CAPACITY INCLUDING ALL ATTACHMENTS (HIGHWAY AND HEAVY ONLY)

314 DREDGE OR ENGINEERS, DREDGE (POWER) AND ENGINEER

315 FRONT END LOADER, FIVE CUBIC YARDS AND OVER INCLUDING ATTACHMENTS. (HIGHWAY AND HEAVY ONLY)

316 LOCOMOTIVE CRANE OPERATOR

317 MIXER (PAVING) CONCRETE PAVING, ROAD MOLE, INCLUDING MUCKING OPERATIONS, CONWAY OR SIMILAR TYPE

318 MECHANIC . WELDER ON POWER EQUIPMENT (HIGHWAY AND HEAVY ONLY)

319 TRACTOR . BOOM TYPE (HIGHWAY AND HEAVY ONLY)

320 TANDEM SCRAPER

321 TRUCK CRANE . CRAWLER CRANE (HIGHWAY AND HEAVY ONLY)

322 TUGBOAT 100 H.P AND OVER (HIGHWAY AND HEAVY ONLY)

GROUP 4	2011-10-31	30.97	16.60	47.57
	2012-05-01	31.12	16.70	47.82

323 AIR TRACK ROCK DRILL

324 AUTOMATIC ROAD MACHINE (CMI OR SIMILAR) (HIGHWAY AND HEAVY ONLY)

325 BACKFILLER OPERATOR

326 CONCRETE BATCH PLANT OPERATOR (HIGHWAY AND HEAVY ONLY)

327 BITUMINOUS ROLLERS, RUBBER TIRED OR STEEL DRUMMED (EIGHT TONS AND OVER)

328 BITUMINOUS SPREADER AND FINISHING MACHINES (POWER), INCLUDING PAVERS, MACRO SURFACING AND MICRO SURFACING, OR SIMILAR TYPES (OPERATOR AND SCREED PERSON)

329 BROKK OR R.T.C. REMOTE CONTROL OR SIMILAR TYPE WITH ALL ATTACHMENTS

330 CAT CHALLENGER TRACTORS OR SIMILAR TYPES PULLING ROCK WAGONS, BULLDOZERS AND SCRAPERS

331 CHIP HARVESTER AND TREE CUTTER

332 CONCRETE DISTRIBUTOR AND SPREADER FINISHING MACHINE, LONGITUDINAL FLOAT, JOINT MACHINE, AND SPRAY MACHINE

333 CONCRETE MIXER ON JOBSITE (HIGHWAY AND HEAVY ONLY)

334 CONCRETE MOBIL (HIGHWAY AND HEAVY ONLY)

335 CRUSHING PLANT (GRAVEL AND STONE) OR GRAVEL WASHING, CRUSHING AND SCREENING PLANT

336 CURB MACHINE

337 DIRECTIONAL BORING MACHINE

338 DOPE MACHINE (PIPELINE)

339 DRILL RIGS, HEAVY ROTARY OR CHURN OR CABLE DRILL (HIGHWAY AND HEAVY ONLY)

340 DUAL TRACTOR

341 ELEVATING GRADER

342 FORK LIFT OR STRADDLE CARRIER (HIGHWAY AND HEAVY ONLY)

343 FORK LIFT OR LUMBER STACKER (HIGHWAY AND HEAVY ONLY)

344 FRONT END, SKID STEER OVER 1 TO 5 C YD

345 GPS REMOTE OPERATING OF EQUIPMENT

346 HOIST ENGINEER (POWER) (HIGHWAY AND HEAVY ONLY)

347 HYDRAULIC TREE PLANTER

348 LAUNCHER PERSON (TANKER PERSON OR PILOT LICENSE)

349 LOCOMOTIVE (HIGHWAY AND HEAVY ONLY)

350 MILLING, GRINDING, PLANNING, FINE GRADE, OR TRIMMER MACHINE

351 MULTIPLE MACHINES, SUCH AS AIR COMPRESSORS, WELDING MACHINES, GENERATORS, PUMPS (HIGHWAY AND HEAVY ONLY)

352 PAVEMENT BREAKER OR TAMPING MACHINE (POWER DRIVEN) MIGHTY MITE OR SIMILAR TYPE

353 PICKUP SWEEPER, ONE CUBIC YARD AND OVER HOPPER CAPACITY(HIGHWAY AND HEAVY ONLY)

354 PIPELINE WRAPPING, CLEANING OR BENDING MACHINE

355 POWER PLANT ENGINEER, 100 KWH AND OVER (HIGHWAY AND HEAVY ONLY)

356 POWER ACTUATED HORIZONTAL BORING MACHINE, OVER SIX INCHES

357 PUGMILL

358 PUMPCRETE (HIGHWAY AND HEAVY ONLY)

359 RUBBER-TIRED FARM TRACTOR WITH BACKHOE INCLUDING ATTACHMENTS (HIGHWAY AND HEAVY ONLY)

360 SCRAPER

361 SELF-PROPELLED SOIL STABILIZER

362 SLIP FORM (POWER DRIVEN) (PAVING)

363 TIE TAMPER AND BALLAST MACHINE

364 TRACTOR, BULLDOZER (HIGHWAY AND HEAVY ONLY)

365 TRACTOR, WHEEL TYPE, OVER 50 H.P. WITH PTO UNRELATED TO LANDSCAPING (HIGHWAY AND HEAVY ONLY)

366 TRENCHING MACHINE (SEWER, WATER, GAS) EXCLUDES WALK BEHIND TRENCHER (HIGHWAY AND HEAVY ONLY)

367 TUB GRINDER, MORBARK, OR SIMILAR TYPE

368 WELL POINT DISMANTLING OR INSTALLATION (HIGHWAY AND HEAVY ONLY)

GROUP 5	2011-10-31	27.93	16.60	44.53
	2012-05-01	28.08	16.70	44.78

369 AIR COMPRESSOR, 600 CFM OR OVER (HIGHWAY AND HEAVY ONLY)

370 BITUMINOUS ROLLER (UNDER EIGHT TONS)

371 CONCRETE SAW (MULTIPLE BLADE) (POWER OPERATED)

372 FORM TRENCH DIGGER (POWER)

373 FRONT END, SKID STEER UP TO 1C YD

374 GUNITE GUNALL (HIGHWAY AND HEAVY ONLY)

375 HYDRAULIC LOG SPLITTER

376 LOADER (BARBER GREENE OR SIMILAR TYPE)

377 POST HOLE DRIVING MACHINE/POST HOLE AUGER

378 POWER ACTUATED AUGER AND BORING MACHINE

379 POWER ACTUATED JACK

380 PUMP (HIGHWAY AND HEAVY ONLY)

381 SELF-PROPELLED CHIP SPREADER (FLAHERTY OR SIMILAR)

382 SHEEP FOOT COMPACTOR WITH BLADE . 200 H.P. AND OVER

383 SHOULDERING MACHINE (POWER) APSCO OR SIMILAR TYPE INCLUDING SELF-PROPELLED SAND AND CHIP SPREADER

384 STUMP CHIPPER AND TREE CHIPPER

385 TREE FARMER (MACHINE)

GROUP 6	2011-10-31	26.72	16.60	43.32
	2012-05-01	26.87	16.70	43.57

387 CAT, CHALLENGER, OR SIMILAR TYPE OF TRACTORS, WHEN PULLING DISK OR ROLLER

388 CONVEYOR (HIGHWAY AND HEAVY ONLY)

389 DREDGE DECK HAND

390 FIRE PERSON OR TANK CAR HEATER (HIGHWAY AND HEAVY ONLY)

391 GRAVEL SCREENING PLANT (PORTABLE NOT CRUSHING OR WASHING)

392 GREASER (TRACTOR) (HIGHWAY AND HEAVY ONLY)

393 LEVER PERSON

394 OILER (POWER SHOVEL, CRANE, TRUCK CRANE, DRAGLINE, CRUSHERS, AND MILLING MACHINES, OR OTHER SIMILAR HEAVY EQUIPMENT) (HIGHWAY AND HEAVY ONLY)

395 POWER SWEEPER

396 SHEEP FOOT ROLLER AND ROLLERS ON GRAVEL COMPACTION, INCLUDING VIBRATING ROLLERS

397 TRACTOR, WHEEL TYPE, OVER 50 H.P., UNRELATED TO LANDSCAPING

TRUCK DRIVERS

GROUP 1	2011-10-31	27.10	13.65	40.75
	2012-05-01	27.50	13.65	41.15

601 MECHANIC . WELDER

602 TRACTOR TRAILER DRIVER

603 TRUCK DRIVER (HAULING MACHINERY INCLUDING OPERATION OF HAND AND POWER OPERATED WINCHES)

GROUP 2	2011-10-31	26.55	13.65	40.20
	2012-05-01	26.95	13.65	40.60

604 FOUR OR MORE AXLE UNIT, STRAIGHT BODY TRUCK

GROUP 3	2011-10-31	26.45	13.65	40.10
	2012-05-01	26.85	13.65	40.50

605 BITUMINOUS DISTRIBUTOR DRIVER

606 BITUMINOUS DISTRIBUTOR (ONE PERSON OPERATION)

607 THREE AXLE UNITS

GROUP 4	2011-10-31	26.20	13.65	39.85
	2012-05-01	26.60	13.65	40.25

608 BITUMINOUS DISTRIBUTOR SPRAY OPERATOR (REAR AND OILER)

609 DUMP PERSON

610 GREASER

611 PILOT CAR DRIVER

612 RUBBER-TIRED, SELF-PROPELLED PACKER UNDER 8 TONS

613 TWO AXLE UNIT

614 SLURRY OPERATOR

615 TANK TRUCK HELPER (GAS, OIL, ROAD OIL, AND WATER)

616 TRACTOR OPERATOR, UNDER 50 H.P.

SPECIAL CRAFTS

701	HEATING AND FROST INSULATORS	2011-10-31	41.07	18.39	59.46
702	BOILERMAKERS	FOR RATE CALL 651-284-5091 OR EMAIL DLI.PREVWAGE@STATE.MN.US			
703	BRICKLAYERS	2011-10-31	31.66	17.38	49.04
704	CARPENTERS	2011-10-31	32.04	17.53	49.57
		2012-05-01	32.54	17.53	50.07
705	CARPET LAYERS (LINOLEUM)	2011-10-31	23.79	7.96	31.75
706	CEMENT MASONS	2011-10-31	32.30	17.00	49.30
		2012-05-01	32.80	17.00	49.80
707	ELECTRICIANS	2011-10-31	35.55	22.86	58.41

708	ELEVATOR CONSTRUCTORS	FOR RATE CALL 651-284-5091 OR EMAIL DLI.PREVWAGE@STATE.MN.US			
709	GLAZIERS	FOR RATE CALL 651-284-5091 OR EMAIL DLI.PREVWAGE@STATE.MN.US			
710	LATHERS	FOR RATE CALL 651-284-5091 OR EMAIL DLI.PREVWAGE@STATE.MN.US			
711	GROUND PERSON	2011-10-31	24.15	12.13	36.28
712	IRONWORKERS	2011-10-31	34.05	20.37	54.42
713	LINEMAN	2011-10-31	36.04	15.64	51.68
714	MILLWRIGHT	2011-10-31	30.05	19.52	49.57
		2012-05-01	30.90	19.52	50.42
715	PAINTERS (INCLUDING HAND BRUSHED, HAND SPRAYED, AND THE TAPING OF PAVEMENT MARKINGS)	2011-10-31	30.45	17.45	47.90
716	PILEDRIVER (INCLUDING VIBRATORY DRIVER OR EXTRACTOR FOR PILING AND SHEETING OPERATIONS)	2011-10-31	31.99	17.58	49.57
		2012-05-01	32.49	17.58	50.07
717	PIPEFITTERS . STEAMFITTERS	2011-10-31	27.69	19.00	46.69
718	PLASTERERS	FOR RATE CALL 651-284-5091 OR EMAIL DLI.PREVWAGE@STATE.MN.US			
719	PLUMBERS	2011-10-31	32.42	23.66	56.08
720	ROOFER				

		FOR RATE CALL 651-284-5091 OR EMAIL DLI.PREVWAGE@STATE.MN.US			
721	SHEET METAL WORKERS	2011-10-31	38.79	20.21	59.00
		2012-05-01	39.29	20.21	59.50
722	SPRINKLER FITTERS	FOR RATE CALL 651-284-5091 OR EMAIL DLI.PREVWAGE@STATE.MN.US			
723	TERRAZZO WORKERS	FOR RATE CALL 651-284-5091 OR EMAIL DLI.PREVWAGE@STATE.MN.US			
724	TILE SETTERS	2011-10-31	27.89	18.09	45.98
725	TILE FINISHERS	FOR RATE CALL 651-284-5091 OR EMAIL DLI.PREVWAGE@STATE.MN.US			
726	DRYWALL TAPER	FOR RATE CALL 651-284-5091 OR EMAIL DLI.PREVWAGE@STATE.MN.US			
727	WIRING SYSTEM TECHNICIAN	2011-10-31	32.09	12.39	44.48
728	WIRING SYSTEMS INSTALLER	2011-10-31	22.46	10.61	33.07
729	ASBESTOS ABATEMENT WORKER	2011-10-31	27.33	14.49	41.82
		2012-01-01	27.33	14.94	42.27
730	SIGN ERECTOR	FOR RATE CALL 651-284-5091 OR EMAIL DLI.PREVWAGE@STATE.MN.US			

Official Notices

Department of Labor and Industry (DLI)

Labor Standards Unit

Notice of Certification of Truck Rental Rates and Effective Date Pursuant to *Minnesota Rules*, Part 5200.1105

On May 1, 2012, the Commissioner of the Department of Labor and Industry ("DLI") certified the minimum truck rental rates for highway projects in the state's ten highway and heavy construction areas for trucks and drivers operating "four or more axle units, straight body trucks," "three axle units," "tractor only" and "tractor trailers." The certification followed publication of the Notice of Determination of Truck Rental Rates in the *State Register* on March 12, 2012, and the informal conference held pursuant to Minnesota Rules, part 5200.1105 on April 4, 2012.

According to Minnesota Rules, part 5200.1105, the purpose of the informal conference is for DLI to obtain further input regarding the proposed rates before the rates are certified. Approximately 18 individuals attended the informal conference. Many of the attendees voiced strong concerns regarding the inadequacy of the proposed rates. Among the concerns raised was the fact that the proposed rates were based on 2010 costs, including the 2010 price of fuel. Speakers indicated that because of the dramatic increase in the price of diesel in recent months, the published rates were far below the operators' current costs. As stated by some attendees:

> **"This year, right now yesterday we were paying $4.10...I know when fuel went up that last time, a lot of us had to eat the cost because there was no way of recouping it."**
>
> Testimony of Colleen Donovan, Transcript of Informal Conference, pp. 13, 14.

Ms. Donavan provided DLI written information that her 2010 average cost for fuel was $2.99 per gallon.

> **"And, like the price of fuel, $4.25, $4.30. That's what it is down by my place, anyway."**
>
> Testimony of Bob Dornsbach, Transcript of Informal Conference, p. 32.

Mr. Bob Dornsbach provided DLI written information that in October 2010 his fuel cost was $3.15 per gallon.

In response to the informal conference Jim Lloyd provided written information that his 2010 fuel cost was close to $3.00 per gallon and "now is at $4.00 plus and it does not look like it is going to decrease."

After the informal conference, Tom Barnes provided written information that his fuel costs in March 2010 were $2.82 per gallon and that his fuel costs for March 2012 were $4.07 per gallon.

Following the informal conference, DLI staff obtained data from the United States Department of Energy ("DOE") regarding the price of diesel during 2010 as compared to current costs.[1] That data, available at *www.eia.doe.gov*, show that the average price of diesel during 2010 was $2.964 per gallon. The average price of diesel during January, February, and March 2012 was $3.862 per gallon. Consequently, the average price of diesel for the first three months of this year was 30.4% higher than the average cost of diesel during 2010.

The purpose of *Minnesota Rules*, part 5200.1105, as stated in its Statement of Need and Reasonableness, is to "provide equitable compensation" to independent truck operators. The commissioner finds that in order to carry out the purpose of the rule, it is appropriate to consider the concerns expressed at the informal conference[2] and to use average 2012 diesel costs in computing and certifying 2012 truck rental rates. Specifically, the commissioner finds that the extreme disparity between 2010 and current fuel costs warrants this adjustment in order for truck operators to be equitably compensated.[3]

(Footnotes)

[1] U.S. Energy Information Administration Midwest No. 2 Retail Prices (Dollars per Gallon)

[2] The DLI has historically used input from the informal conferences to establish certified rates. For example, truck rental rates certified in 2009 varied from the proposed rates based on information gathered at the informal conference.

[3] The commissioner notes that the Minnesota Department of Transportation incorporates a fuel adjustment clause in certain of its contracts to accommodate the fluctuating price of fuel. That clause generally provides for the adjustment of contract payments when the cost of fuel increases or decreases by more than 15% from an indexed rate during the term of the contract. By using 2012 fuel costs in certifying 2012 truck rental rates, the commissioner is not intending to adopt or establish a similar fuel adjustment mechanism. Rather, he is taking this action to effectuate the purpose of Part 5200.1105 in light of the concerns raised at the informal conference and the dramatic increase in the price of diesel between 2010 and effective date of 2012 truck rental rates.

Construction truck operating costs were initially determined by survey on a statewide basis and were the subject of further input by interested parties attending the informal conference pursuant to *Minnesota Rules*, part 5200.1105 on April 4, 2012 and further data on fuel prices from the DOE for 2010 and 2012. In light of the discussion above, fuel costs stated in the surveys were adjusted upward by 30.4% to determine statewide operating costs. As a result of this adjustment, the operating cost for "four axle units, straight body trucks" is determined to be $51.58 per hour; the operating cost for "three axle units" is determined to be $37.35 per hour; the operating cost for "tractor only" is determined to be $41.43 per hour; and the operating cost for "tractor trailers" is determined to be $52.89 per hour.

Adding the prevailing wage for drivers of these four types of trucks from each of the State's ten highway and heavy construction areas to the operating costs, the minimum hourly truck rental rate for the four types of trucks in each area is certified to be as follows:

3 Axle Units

	Effective Date	607 Driver Rate	Operating Cost	Truck Rental Rate
Region 1	May 1, 2012	40.10	37.35	77.45
Region 2	May 1, 2012	33.76	37.35	71.11
Region 3	May 1, 2012	25.40	37.35	62.75
Region 4	May 1, 2012	33.76	37.35	71.11
Region 5	May 1, 2012	40.50	37.35	77.85
Region 6	May 1, 2012	38.30	37.35	75.65
Region 7	May 1, 2012	33.76	37.35	71.11
Region 8	May 1, 2012	33.76	37.35	71.11
Region 9	May 1, 2012	40.50	37.35	77.85
Region 10	May 1, 2012	13.22	37.35	50.57

4 or more Axle Units

	Effective Date	604 Driver Rate	Operating Cost	Truck Rental Rate
Region 1	May 1, 2012	40.20	51.58	91.78
Region 2	May 1, 2012	33.91	51.58	85.49
Region 3	May 1, 2012	24.71	51.58	76.29
Region 4	May 1, 2012	33.91	51.58	85.49
Region 5	May 1, 2012	26.34	51.58	77.92
Region 6	May 1, 2012	38.40	51.58	89.98
Region 7	May 1, 2012	20.87	51.58	72.45
Region 8	May 1, 2012	20.87	51.58	72.45
Region 9	May 1, 2012	40.60	51.58	92.18
Region 10	May 1, 2012	32.91	51.58	84.49

	Effective Date	Tractor 602 Driver Rate	Operating Cost	Tractor Only Truck Rental Rate	Plus Trailer Operating Cost	Tractor Trailer Rental Rate
Region 1	May 1, 2012	40.75	41.43	82.18	11.46	93.64
Region 2	May 1, 2012	34.42	41.43	75.85	11.46	87.31
Region 3	May 1, 2012	22.37	41.43	63.80	11.46	75.26
Region 4	May 1, 2012	34.42	41.43	75.85	11.46	87.31
Region 5	May 1, 2012	21.38	41.43	62.81	11.46	74.27
Region 6	May 1, 2012	37.95	41.43	79.38	11.46	90.84
Region 7	May 1, 2012	25.85	41.43	67.28	11.46	78.74
Region 8	May 1, 2012	34.42	41.43	75.85	11.46	87.31
Region 9	May 1, 2012	41.15	41.43	82.58	11.46	94.04
Region 10	May 1, 2012	33.42	41.43	74.85	11.46	86.31

The operating costs, including the average truck broker fees paid by those survey respondents who reported paying truck broker fees, and the truck rental rates may also be reviewed by accessing DLI's website at *www.dli.mn.gov*. Questions regarding the operational costs and truck rental rates can be answered by calling (651) 284-5091.

The minimum truck rental rates certified for these four types of trucks in the state's ten highway and heavy construction areas will be effective for all highway and heavy construction projects financed in whole or part with state funds advertised for bid on or after May 1, 2012.

Dated: 1 May 2012

Ken B. Peterson, Commissioner
Department of Labor and Industry

We as contractor, sub-contractor or vendor fully intend to comply with the standards of equal employment and anti-discrimination as cited in the Civil Rights Act of 1964 as amended in 1972 by the Equal Employment Opportunity Act.

CONTRACTOR'S NAME: _____
(Please Print)

SIGNATURE: _____

MAILING ADDRESS: _____

PHONE NUMBER: _____ **FAX NUMBER**_____

EMAIL ADDRESS: _____

By signing this contract, the Contractor certifies they are in compliance with County Board Resolution 11-240, regarding bid and contract policy. (See Attachment).

Notice to Bidders (Specifications)

Certain specification sections that have been traditionally included in the proposals are now available over the internet. These specifications are also available by request from the Dakota County Transportation Department. This in no way reduces your responsibility to strictly adhere to these specifications.

The following specifications are required by this contract and are available by request from the Dakota County Transportation Department and via the Dakota County website at: http://www.dakotacounty.us/DoingBusiness/default.htm, select *Other Information* in the *Requests for Bids, Proposals, and Information* section

Schedule of Materials Control (April 2012)	60 pages
2360 Plant Mixed Asphalt Pavement (dated March 5, 2012)	42 pages
NPDES – Storm-water Permit for Construction Activity	30 pages
City Engineers Association of Minnesota (C.E.A.M.) Standard Specifications 1999 Edition	65 pages
Materials Design Recommendation Report from Mn/DOT	181 files
FINAL Phase II ESA TH 13 CSAH 5	339 pages
RESPONSE ACTION PLAN	35 pages

This contract requires strict adherence to these specifications. It is the contractor's responsibility to make himself/herself familiar with them. As bidder of this contract, I acknowledge that I(we) am(are) familiar with the above documents and that we will adhere to the requirements of same for this contract.

_____

Signed Date

for:_____

Planholder's List

Contractor's may access the planholder's list for this project at any time from the Dakota County website at: http://www.dakotacounty.us/DoingBusiness/default.htm, select *Current Bids*, then select *Dakota County Transportation Projects*, and then select *County Project 5-41 etc. (TH 13 at CSAH 5).* Access this project through the Quest CDN web site and select *View Planholders* from the top bar.

Attachments

See Notice to Bidders (Specifications)

- Schedule of Materials Control
- 2360 Plant Mixed Asphalt Pavement
- Minnesota Pollution Control Agency General Permit "Authorization to Discharge Storm Water"
- City Engineers Association of Minnesota (CEAM) Standard Specifications – 1999 Edition
- Materials Design Recommendation Report from Mn/DOT
- FINAL Phase II ESA TH 13 CSAH 5
- Response Action Plan (RAP)

Included Attachments

- Exhibit 1 – Insurance Terms
- Stipulation for Foreign Iron or Steel Materials
- (1910) Fuel Escalation Clause
- Disadvantaged Business Enterprise (DBE) Special Provisions
- Equal Employment Opportunity (EEO) Special Provisions
- Equal Employment Opportunity (EEO), Appendix A (Short Version) & Attachment CM 32-34
- Mn/DOT Form 21658A (Statement of Wage Rate Compliance)
- Form 21126D With DBE Goal
- Dakota County Demolition Waste Disposal Policy and Procedures (Ordinance No. 110)
- Minnesota Pollution Control Agency "General Storm-water Permit for Construction Activity" for TH 13 and CSAH 5 and Application for Permit Transfer/Modification
- Non-Collusion Affidavit
- Bid Bond Form 21816
- County Board Resolution 11-240 regarding Bid and Contract Policy
- Tennessen Notice – Data Privacy Acknowledgment
- Caution Blanding's Turtles
- Blanding's Turtles Environmental Review Fact Sheet Series
- Recommendations for Avoiding and Minimizing Impacts

I hereby certify that (Division S) was prepared by me or under my direct supervision and that I am a duly Licensed Professional Engineer under the laws of the State of Minnesota.

Thomas J. Anton, P.E.
Reg. No. 20396

10/8/12
Date

DIVISION S

Section Page

S-1 CONTACT INFORMATION 1
S-2 PROTECTION OF BLANDINGS TURTLE 1
S-3 INSURANCE 2
S-4 EMERALD ASH BORER COMPLIANCE 2
S-5 USE OF ADHESIVE ANCHORS 3
S-6 (1205) EXAMINATION OF PLANS, SPECIFICATIONS, AND SITE OF WORK 3
S-7 (1206) PREPARATION OF PROPOSAL 3
S-8 (1208) PROPOSAL GUARANTY 3
S-9 (1302) AWARD OF CONTRACT 4
S-10 (1305) REQUIREMENT OF CONTRACT BOND 6
S-11 (1404) MAINTENANCE OF TRAFFIC AND (2563) TRAFFIC CONTROL 6
S-12 (1407) FINAL CLEANUP 22
S-13 (1505) COOPERATION BY CONTRACTORS 22
S-14 (1506) SUPERVISION BY CONTRACTOR 23
S-15 (1507) UTILITY PROPERTY AND SERVICE 23
S-16 (1508) CONSTRUCTION STAKES, LINES AND GRADES 28
S-17 (1513) RESTRICTIONS ON MOVEMENT AND STORAGE OF HEAVY LOADS AND EQUIPMENT 29
S-18 (1514) MAINTENANCE DURING CONSTRUCTION 30
S-19 (1517) CLAIMS FOR COMPENSATION ADJUSTMENT 31
S-20 (1601) SOURCE OF SUPPLY AND QUALITY 34
S-21 (1602) NATURAL MATERIAL SOURCES 35
S-22 (1606) STORAGE OF MATERIALS 35
S-23 (1701) LAWS TO BE OBSERVED (DATA PRACTICES) 36
S-24 (1701) LAWS TO BE OBSERVED (BUILDING REMOVALS) 36
S-25 (1701) LAWS TO BE OBSERVED (CULTURAL RESOURCES) 38
S-26 1702) PERMITS, LICENSES, AND TAXES 40
S-27 (1706) EMPLOYEE HEALTH AND WELFARE 41
S-28 (1707) PUBLIC CONVENIENCE AND SAFETY 41
S-29 (1710) TRAFFIC CONTROL DEVICES 42
S-30 (1712) PROTECTION AND RESTORATION OF PROPERTY AND LANDSCAPE 42
S-31 (1714) RESPONSIBILITY FOR DAMAGE CLAIMS; INSURANCE 43
S-32 (1716) CONTRACTOR'S RESPONSIBILITY FOR WORK 43

S-33 (1717) AIR, LAND AND WATER POLLUTION 43
S-34 (1717) AIR, LAND AND WATER POLLUTION (CONCRETE GRINDING) 46
S-35 (1717) NATIONAL POLLUTANT DISCHARGE ELIMINATION SYSTEM (NPDES) PERMIT 46
S-36 (1718) FURNISHING RIGHT-OF-WAY 51
S-37 IMPLEMENTATION OF CLEAN AIR ACT AND FEDERAL WATER POLLUTION CONTROL ACT 51
S-38 (1802) TRAINING FOR CONSTRUCTION TRUCK OPERATORS 51
S-39 (1803) PROSECUTION OF WORK 52
S-40 (1803) PROGRESS SCHEDULES CRITICAL PATH METHOD (CPM) SCHEDULE 56
S-41 (1804) FAILURE TO MAINTAIN SATISFACTORY PROGRESS 68
S-42 (1806) DETERMINATION AND EXTENSION OF CONTRACT TIME 68
S-43 (1807) FAILURE TO COMPLETE THE WORK ON TIME 83
S-44 (1809) EMERGENCY CANCELLATION OF CONTRACT 84
S-45 (1901) MEASUREMENT OF QUANTITIES 84
S-46 (1903) COMPENSATION FOR INCREASED OR DECREASED QUANTITIES 84
S-47 (1904) EXTRA AND FORCE ACCOUNT WORK 85
S-48 (1910) FUEL ESCALATION CLAUSE 85
S-49 (2011) VIBRATION MONITORING 85
S-50 (2021) MOBILIZATION 90
S-51 (2031) FIELD OFFICE 90
S-52 (2041) ON-THE-JOB-TRAINING PROGRAM 93
S-53 (2051) MAINTENANCE AND RESTORATION OF HAUL ROADS 97
S-54 (2101) CLEARING AND GRUBBING 98
S-55 (2102) PAVEMENT MARKING REMOVAL 98
S-56 (2103) BUILDING REMOVALS 99
S-57 (2103) CONSTRUCTION WASTE MANAGEMENT AND DEBRIS RECYCLING REQUIREMENTS 101
S-58 (2104) REMOVE TANK 103
S-59 (2104) REMOVING PAVEMENT AND MISCELLANEOUS STRUCTURES 108
S-60 (2104) REMOVE AND HAUL TREATED WOOD 110
S-61 (2104) HAUL SALVAGED MATERIALS 111
S-62 (2104) SALVAGE CONCRETE BLOCK RETAINING WALL 111
S-63 (2105) DEWATERING 111
S-64 (2105) EXCAVATION SPECIAL 114
S-65 (2105) CONTAMINATED SOIL AND GROUNDWATER 118
S-66 (2106) EXCAVATION AND EMBANKMENT 122
S-67 (2123) STREET SWEEPER (WITH PICKUP BROOM) 138

S-68 (2130) APPLICATION OF WATER 139
S-69 (2211) AGGREGATE BASE 139
S-70 (2221) AGGREGATE SHOULDERING 140
S-71 (2231) BITUMINOUS PATCHING MIXTURE 140
S-72 (2301) CONCRETE PAVEMENT 141
S-73 (2301) HIGH PERFORMANCE DOWEL BAR – 38 mm (1.5 inch) 183
S-74 (2301) HIGH PERFORMANCE DOWEL BAR – 32 mm (1.25 inch) 184
S-75 (2357) BITUMINOUS TACK COAT 185
S-76 (2360) PLANT MIXED ASPHALT PAVEMENT 187
S-77 (2399) PAVEMENT SURFACE SMOOTHNESS 189
S-78 (2406) BRIDGE APPROACH PANELS 197
S-79 (2411) CONCRETE STEPS-DESIGN SPECIAL 201
S-80 (2411) RECONSTRUCT RETAINING WALL 201
S-81 (2411) CONCRETE RETAINING WALL (SPECIAL) 202
S-82 (2411) TIMBER LAGGING CONCRETE RETAINING WALL (SPECIAL) 237
S-83 (2411) DRILLED SHAFT (EARTH) CONCRETE RETAINING WALL (SPECIAL) 238
S-84 (2411) PREFABRICATED MODULAR BLOCK WALLS (PMBW) WITH AND WITHOUT EARTH REINFORCEMENT 246
S-85 (2411) ARCHITECTURAL SURFACE FINISH (SINGLE COLOR) 289
S-86 (2411) ARCHITECTURAL CONCRETE TEXTURE (RANDOM BATTEN) 291
S-87 (2422) WOOD NOISE BARRIER 292
S-88 (2461) STRUCTURAL CONCRETE 304
S-89 (2471) STRUCTURAL METALS 327
S-90 (2472) METAL REINFORCEMENT 327
S-91 (2501) PIPE CULVERTS 328
S-92 (2502) SUBSURFACE DRAINS, PERMEABLE AGGREGATE BASE TYPE 330
S-93 (2502) SUBSURFACE DRAINS, SUBCUT DRAIN TYPE 332
S-94 (2503) PIPE SEWERS 334
S-95 (2503) CONNECT TO EXISTING STORM SEWER 336
S-96 (2503) REPAIR SEWER PIPE 337
S-97 (2503) CONSTRUCT BULKHEAD 338
S-98 (2503) 48" STEEL CASING PIPE 338
S-99 (2506) MANHOLES AND CATCH BASINS 339
S-100 (2506) CONNECT INTO EXISTING DRAINAGE STRUCTURE 340
S-101 (2511) RIPRAP 340
S-102 (2521) WALKS 340
S-103 (2521) CONCRETE WALK (ADA) 344

S-104 (2531) CONCRETE CURBING 345
S-105 (2531) CONCRETE CURB AND GUTTER (ADA) 348
S-106 (2531) TRUNCATED DOMES 349
S-107 (2533) PORTABLE PRECAST CONCRETE BARRIER DESIGN 8337 349
S-108 (2533) CONCRETE MEDIAN BARRIER DESIGN 8308 AND 8309 350
S-109 (2533) RELOCATE PORTABLE PRECAST CONCRETE BARRIER DESIGN 8337 351
S-110 (2554) TRAFFIC BARRIERS 351
S-111 (2554) END TREATMENT - TANGENT TERMINAL 351
S-112 (2554) END TREATMENT – FLARED TERMINAL 352
S-113 (2554) INSTALL ENERGY ABSORBING TERMINAL 354
S-114 (2554) INSTALL GUARD RAIL 354
S-115 (2554) IMPACT ATTENUATOR 355
S-116 (2554) RELOCATE IMPACT ATTENUATOR 355
S-117 (2557) INSTALL VEHICULAR GATE 356
S-118 (2557) FENCING 356
S-119 (2557) TEMPORARY GLARE SCREEN 356
S-120 (2557) INSTALL CHAIN LINK FENCE 357
S-121 (2557) ORNAMENTAL IRON FENCE 357
S-122 (2563) TRAFFIC CONTROL SUPERVISOR 361
S-123 (2563) TEMPORARY PEDESTRIAN ACCESS CONTROL 363
S-124 (2563) RAISED PAVEMENT MARKERS TEMPORARY (TRPMS) 365
S-125 (2563) MEDIAN BARRIER DELINEATOR 365
S-126 (2563) PORTABLE CHANGEABLE MESSAGE SIGN 365
S-127 (2572) PROTECTION AND RESTORATION OF VEGETATION 366
S-128 (2573) STORM WATER MANAGEMENT 367
S-129 (2573) STORM DRAIN INLET PROTECTION 368
S-130 (2575) CONTROLLING EROSION AND ESTABLISHING VEGETATION 370
S-131 (2575) RAPID STABILIZATION SPECIFICATIONS 371
S-132 (2580) INTERIM PAVEMENT MARKING 372
S-133 (2581) REMOVABLE PREFORMED PLASTIC MASK (BLACK) 373
S-134 (2582) PERMANENT PAVEMENT MARKINGS 373
S-135 (2582) PERMANENT PAVEMENT MARKINGS (POLY PREFORMED) 374
S-136 (2582) PERMANENT PAVEMENT MARKINGS (POLY PREFORMED GROUND IN) 376
S-137 (2582) PERMANENT PAVEMENT MARKINGS (EPOXY GROUND IN) 379
S-138 (3103) PORTLAND-POZZOLAN CEMENT 382
S-139 (3137) COARSE AGGREGATE FOR PORTLAND CEMENT CONCRETE 382

S-140 (3138) AGGREGATE FOR SURFACE AND BASE COURSES 388
S-141 (3139) GRADED AGGREGATE FOR BITUMINOUS MIXTURES 390
S-142 (3236) REINFORCED CONCRETE PIPE 397
S-143 (3247) CORRUGATED POLYETHYLENE PIPE 398
S-144 (3301) REINFORCEMENT BARS 398
S-145 (3302) DOWEL BARS 398
S-146 (3310) HIGH STRENGTH LOW ALLOY COLUMBIUM-VANADIUM STEEL 399
S-147 (3376) FENCE WIRE 399
S-148 (3401) FLANGED CHANNEL SIGN POSTS 401
S-149 (3403) ROLLED STEEL FENCE POSTS 402
S-150 (3406) STRUCTURAL METAL FENCE POSTS 402
S-151 (3590) EPOXY RESIN PAVEMENT MARKINGS (FREE OF TOXIC HEAVY METALS) 403
S-152 (3591) HIGH SOLIDS WATER BASED TRAFFIC PAINT 405
S-153 (3592) DROP-ON GLASS BEAD 405
S-154 (3721) PREFORMED ELASTOMERIC COMPRESSION JOINT SEALS FOR CONCRETE 406
S-155 (3753) TYPE 1-D MEMBRANE CURING COMPOUND 406
S-156 (3754) POLY-ALPHA METHYLSTYRENE (AMS) MEMBRANE CURING COMPOUND 407
S-157 (3755) LINSEED OIL MEMBRANE CURING COMPOUND 408
S-158 (3861) PLANT STOCK 409
S-159 (3876) SEED 410
S-160 (3877) TOPSOIL BORROW 422
S-161 (3889) TEMPORARY DITCH CHECKS 423
S-162 (3891) STORM DRAIN INLET PROTECTION 424
S-163 FINAL ESTIMATE AND FINAL PAYMENT 424

OTHER SECTIONS

The Special Provisions for Bridge Construction (**Division SB**) and the tabulation of the bridge plans follows Division S in this Proposal.

The Special Provisions for Lighting Construction (**Division SL**) follows Division SB in this Proposal.

The Special Provisions for Signal Construction (**Division SS**) follows Division SL in this Proposal.

The Special Provisions for Traffic Sign Construction (**Division ST**) follows Division SS in this Proposal.

The Special Provisions for Traffic Management System Construction (**Division SZ**) follows Division ST in this Proposal.

The Special Provisions for the Water and Sanitary Sewer prepared by the City of Burnsville (**DIVISION 2)** follows Division SZ.

The Special Provisions for the City of Burnsville Lighting (DIVISION 2 SLC 1 – SLC 5) follows Division 2 prepared by S.E.H

PROJECT PLANS

The Plans for this Project, consisting of the sheets tabulated below, were approved by the State Design Engineer.

PROJECT NO.	TYPE OF WORK	TOTAL SHEETS	SHEET NO.	DATE OF APPROVAL
1901-148	**Grading, Bituminous and Concrete Surfacing, Retaining Walls, Noise Walls, Signals, TMS, Signing, Lighting, and Bridge No. 19036**	817	1-442 U1-U28 TC1-TC84 PM1-PM14 SL1-SL6 SLC1-SLC5 ST1-ST48 SZ1-SZ23 SS1-SS31 X1-X137	August 16, 2012

New or revised sheets were approved as listed below:

PROJECT NO.	SHEET NO.	DATE OF APPROVAL

DIVISION S

S-1 CONTACT INFORMATION

Questions regarding this project prior to bidding shall be directed to John Sass, Dakota County Transportation Department at (952) 891-7130 or email at john.sass@co.dakota.mn.us

S-2 PROTECTION OF BLANDINGS TURTLE

The Project location is inhabited by the threatened species "Blanding's Turtle". This work shall consist of protecting the endangered Blanding's Turtle in accordance with the attachments listed below and this special provision:

S-2.1 BACKGROUND INFORMATION:

The Project location is inhabited by the threatened species "Blanding's Turtle". Blanding's turtles spend much of their time in shallow wetlands (1-3 feet deep), but they nest in open, shady uplands up to 1 mile from wetlands. Nesting is in June and eggs hatch in September, at which time young turtles enter deep wetlands where they over-winter in soft sediments. Factors believed to contribute to the decline of this species include wetland drainage and degradation, development on upland nesting areas, and possibly collection for pet trade. In addition, because of the tendency for Blanding's Turtles to travel long distances over land, they are often forced to cross roads in developed areas.

S-2.2 REQUIREMENTS:

(A) The Contractor is to undertake all practicable measures to protect both turtle and habitat as per the attached recommendations entitled "Caution Blanding's Turtles", "Summary of Recommendations for Avoiding and Minimizing Impacts to Blanding's Turtle Populations", and "Environmental Review Fact Sheet Series". The fact sheet is intended to provide background information regarding habitat use, life history, and reasons for the species decline, as well as recommendations for avoiding and minimizing impacts to this rare turtle.

(B) All Blanding's Turtle sightings shall be immediately reported to the local DNR Nongame Specialist **Erica Hoaglund** Phone: 651-259-5772 Email:erica.hoaglund@state.mn.us 1200 Warner Road, Box 28 St. Paul, MN 55106

(C) The Caution flyer with an illustration of an adult Blanding's Turtle along with the Summary of Recommendations sheet (as above), shall be conspicuously posted adjacent to the Engineer's field office.

S-2.3 Compliance with this Special Provision shall not affect the final configuration of the roadway, except as approved by the Engineer.

S-2.4 Payment for any additional effort as required by this Special Provision shall be considered incidental to Item 2021.501 (Mobilization).

S-3 INSURANCE

A. Hold Harmless and Indemnification

To the fullest extent permitted by law, Contractor agrees to indemnify Dakota County, City of Burnsville, and State of Minnesota their officers, employees, agents, and others acting on their behalf, to hold them harmless, and to defend and protect them, from and against any and all loss, damage, liability, cost and expense (specifically including attorneys' fees and other costs and expenses of defense), of any sort whatsoever, based upon, resulting from, or otherwise arising in connection with any actions, claims or proceedings (of any sort and from any source whatsoever) brought, or any loss, damage or injury of any type whatsoever sustained, whether or not also caused in part by a party indemnified hereunder, by reason of any act or omission of Contractor, its officers, employees or agents, or any other person(s) or entity(ies) for whose acts or omissions Contractor may be legally responsible, in the performance of any of Contractor's obligations (whether expressed or implied) under this Contract.

B. Contractor's Insurance

Contractor agrees to provide and maintain at all times during the term of this Contract such insurance coverage's as are set forth in the insurance certificate (attached to these Special Provisions) as Exhibit 1 – Insurance Terms.

C. Contractor's Insurance Magellan Pipeline requirements

Contractor must deliver to Magellan certificate(s) of insurance, naming Magellan Midstream Partners, L.P. and its Affiliates as an additional insured. The limits set forth in **Section S-15 (1507) Utility Property and Services** are minimum limits and will not be construed to limit the Contractors liability.

S-4 EMERALD ASH BORER COMPLIANCE

This Project is located, all or in part, in a county that the Minnesota Department of Agriculture has placed under a Emerald Ash Borer Quarantine. Any work for this Contract is subject to the following:

S-4.1 No part of an Ash (Fraxinus spp) tree from a quarantined area can be marketed to wood-using industries or individuals without an Emerald Ash Borer compliance agreement with Minnesota Department of Agriculture.

The Contractor shall not make ash or any non-coniferous (hardwood) species with bark attached available to the public for use as firewood from the quarantined area. The Contractor shall not transport entire ash trees, limbs, branches, logs, chips, ash lumber with bark, stumps and roots outside of a quarantined county without fulfilling the requirements of an Emerald Ash Borer Compliance Agreement with the Minnesota Department of Agriculture. Contact the Minnesota Department of Agriculture at (651) 201-6684 or 1-888-545-6684 or visit the Emerald Ash Borer website at: http://www.mda.state.mn.us/plants/pestmanagement/eab.aspx to find out which counties are quarantined.

S-4.2 If the ash material is going to be shipped out of Minnesota, the Contractor shall contact John.o.haanstad@aphis.usda.gov for United States Department of Agriculture joint Emerald Ash Borer Compliance Agreement approval with the Minnesota Department of Agriculture.

S-4.3 The Contractor shall dispose of ash trees:

(1) In accordance with the Emerald Ash Borer Compliance Agreement, and

(2) By utilizing the ash wood chips within the construction limits for erosion control, construction exit pads or landscaping purposes.

S-4.4 No direct compensation will be made for compliance with these requirements.

S-5 USE OF ADHESIVE ANCHORS

The use of adhesive anchors in sustained tension is prohibited. Other application utilizing adhesive anchors, such as metal rail attachment, in a non-direct tensile application is permitted.

S-6 (1205) EXAMINATION OF PLANS, SPECIFICATIONS, AND SITE OF WORK

The provisions of Mn/DOT 1205 are hereby supplemented by the following:

S-6.1 No subsurface exploration on the Project shall be performed by prospective bidders until a permit has been obtained from the County. Permits may be obtained from Butch McConnell (952) 891-7115, Transportation Department at the Dakota County Western Service Center, 14955 Galaxie Avenue, Apple Valley. Permit applications are available online at: www.co.dakota.mn.us/DoingBusiness/Permits/Highway/default.htm. The general permit for work within County right of way and Contractor registration will be required.

S-6.2 Bidders shall be responsible for all costs involved in obtaining these permits.

S-7 (1206) PREPARATION OF PROPOSAL

The provisions of Mn/DOT 1206 are supplemented and/or modified with the following:

S-7.1 The first paragraph of Mn/DOT 1206.2 is hereby changed to read:

The bidder's attention is directed to MN Statute § 161.32 subd. 1c, which provides among other things, that a bid will be rejected if it contains any alterations or erasures that are not corrected as follows:

S-8 (1208) PROPOSAL GUARANTY

Attached to this proposal is a copy of a bid bond form that has been approved for use and meets the minimum requirements of Mn/DOT 1208. No proposal will be considered unless it is accompanied by a guaranty complying with these requirements and providing a penal sum at least equal to 5 percent of the total amount of the bid (under all circumstances and without exception) as provided in Mn/DOT 1208.

S-9 (1302) AWARD OF CONTRACT

The first sentence of the first paragraph of Mn/DOT 1302 is hereby deleted and the following substituted therefor:

The award of Contract, if it be awarded, will be made within forty (45) calendar days after the opening of Proposals to the lowest responsible bidder who complies with all prescribed requirements.

S-9.1 ESCROW OF BID DOCUMENTS

(A) The Contractor shall submit a legible copy of bid documentation used to prepare the bid for this Contract to the Dakota County Construction Engineer or his authorized representative. Such documentation will be placed in escrow in a secure locked location and preserved as specified below:

The term "bid documentation" means all writings, working papers, computer printout charts, and all other data calculations used by the Contractor to determine the bid in bidding for this Contract. The bid documentation includes, but is not limited to, Contractor equipment rates, Contractor overhead rates, labor rates, efficiency or productivity factors, arithmetic extensions, and such rates and quotations from subcontractors and material suppliers to the extent that such rates and quotations were used by the Contractor in formulating and determining the amount of the bid.

The bid documentation also includes any manuals which are standard to the industry used by the Contractor in determining the bid for this Project. Such manuals may be included in the bid documentation by reference. Such reference shall include the name and date of the publication and the publisher. (The term "bid documentation" does not include documents provided by Dakota County or their representatives for use by the Contractor in bidding this Project.)

The Contractor shall submit the bid documentation to Dakota County in a container suitable for sealing no later than ten (10) Calendar Days following Award of the Contract by the Department.

The container shall be clearly marked "Bid Documentation" and shall have entered on the face of the container, the Contractor's name, the date of submittal, and the State Project Number. Failure to submit the bid documentation in accordance with ten (10) Calendar Days following Award will result in the assessment of non-compliance charge. Non-compliance charge will be assessed at a rate of $250.00 per day or any portion thereof which the Engineer determines that the Contractor has not complied.

(B) In addition to the bid documentation a notarized affidavit signed by an individual authorized by the Contractor to execute bidding **Proposals** shall be included. The affidavit shall list each bid document with sufficient specificity so a comparison may be made between the list and the bid documentation to ensure that all of the bid documentation listed in the affidavit has been enclosed. The affidavit shall attest that the affiant has personally examined the bid documentation, that the affidavit lists all of the documents used by the Contractor to determine the bid for this Project, and that all such bid documentation has been included.

(C) Upon receipt of the bid documentation, authorized representatives of Dakota County and the Contractor will verify the accuracy and completeness of the bid documentation compared to the affidavit. Should a discrepancy exist, the Contractor shall immediately furnish Dakota County with any other needed bid documentation. Dakota County, upon determining that the bid documentation is complete, will immediately place the complete documentation and affidavit in the container in the presence of the Contractor's representative, and seal it.

Both parties will deliver the sealed container to the storage facility selected by Dakota County for placement in a secure accommodation.

(D) Subcontractors bidding work equaling or exceeding $50,000.00 are required to submit bid documents as described in Paragraph A above except that with the Engineer's permission, the subcontractors may have thirty (30) Calendar Days following Award of the Contract submit bid documentation.

The subcontractor's bid documents are to be sealed in a separate container and delivered by their representative to the Dakota County Construction Engineer or his authorized representative.

The subcontractor's bid documents shall remain in escrow during the life of the Contract or until such time as the Contractor notifies Dakota County of its intention to make a claim or initiates litigation against Dakota County related to the subcontractor's work. If no such notification is received and the Contractor has signed the Certificate of Final Acceptance, or, at the discretion of the County, upon Final Acceptance of Work, Dakota County shall release the sealed container to the subcontractor(s).

The subcontractor affirms that its sealed container delivered to Dakota County contains all of the information used to determine the bid and that no other bid documentation, relating to the subcontractor's work, exists.

(E) The bid documentation and affidavit shall remain in escrow during the life of the Contract or until such time as the Contractor notifies Dakota County of its intention to file a claim or its initiation of litigation against Dakota County related to the Contract. Notification of the Contractor's intention to file a claim, or litigation against Dakota County shall be sufficient evidence for Dakota County to obtain release and custody of the bid documentation. If no such notification is received and the Contractor has signed the Certificate of Final Acceptance, or, at the discretion of the County, upon Final Acceptance of Work, Dakota County shall release the sealed container to the Contractor.

(F) The Contractor affirms that the sealed container placed in escrow contains all of the bid documentation used to determine the bid and that no other bid documentation shall be utilized by the Contractor in litigation over claims brought by the Contractor arising out of this Contract.

Refusal of the Contractor to provide adequate documentation after execution of the Contract will be considered material breach of the Contract, and the Contractor will be declared in default of the Contract. Dakota County may, at its option, terminate the Contract for default. These remedies are not exclusive, and Dakota County may take such other action as is available to it under the law.

(G) The bid documentation and affidavit in escrow are, and will remain, the property of the Contractor. Dakota County has no interest in, or right to, the bid documentation and affidavit other than to verify the contents and legibility of the bid documentation unless notification of the intention to file a claim is received or litigation ensues between Dakota County and the Contractor. In the event of such notification or litigation, the bid documentation and affidavit shall become the property of Dakota County.

S-10 (1305) REQUIREMENT OF CONTRACT BOND

The provisions of Mn/DOT 1305 are hereby deleted and replaced with the following:

The successful bidder shall furnish a payment bond equal to the contract amount and a performance bond equal to the contract amount as required by Minnesota Statutes, section 574.26. The surety and form of the bonds shall be subject to the approval of the contracting authority.

The contracting authority shall require for all contracts less than or equal to five million dollars ($5,000,000.00), that the aggregate liability of the payment and performance bonds shall be twice the amount of the contract. All contracts in excess of five million dollars ($5,000,000.00) shall have an aggregate liability equal to the amount of the contract.

S-10.1 In addition to the contract bonds, the Contractor shall furnish a warranty bond to Dakota County, State of Minnesota, and City of Burnsville to guarantee the underground utilities prior to final Contract payment. The warranty shall run for a period of one year following final acceptance of the Project by the County and the bond shall equal 25% of the Contract amount for the underground utilities. The warranty shall cover against defects in workmanship and materials. The Contractor shall be responsible for repairs to the utilities and damage to roads and streets and adjacent property due to defects in workmanship and materials for underground utilities during the warranty period.

S-11 (1404) MAINTENANCE OF TRAFFIC AND (2563) TRAFFIC CONTROL

Traffic shall be maintained in accordance with the provisions of Mn/DOT 1404, as directed by the Engineer and the following:

S-11.1 All traffic control devices shall conform to and be installed in accordance with the "Minnesota Manual On Uniform Traffic Control Devices" (MN MUTCD) and Part 6, "Field Manual for Temporary Traffic Control Zone Layouts", the "Guide to Establishing Speed Limits in Highway Work Zone", the Minnesota Flagging Handbook, the Minnesota Standard Signs Manuals, the Traffic Engineering Manual, the Traffic Control and Detour Signing Layouts in the Plans, and the provisions of Mn/DOT 1404 and Mn/DOT 1710 and the Traffic Control Layouts/Typical Traffic Control Layouts in the Plans, and the modifications thereto contained in these Special Provisions.

The Contractor shall furnish, install, maintain and remove all traffic control devices required to provide safe movement of vehicular and pedestrian traffic through and around the Project for the life of the Contract from the start of Contract operations to the final completion thereof, including any times of suspension, or until approved by the Engineer, whichever is longer. The Engineer shall have the right to modify the

requirements for traffic control as deemed necessary due to existing field conditions. The highways shall be kept open to traffic at all times, except as modified below.

Traffic control devices include, but are not limited to, barricades, warning signs, trailers, flashers, cones, drums, pavement markings and flaggers as required and sufficient barricade weights to maintain barricade stability.

S-11.2 SPECIAL PROJECT REQUIREMENTS

(1) All traffic shall be maintained at all times on Trunk Highway 13 over a minimum traveled width of one 11 foot wide lane in each direction using the by-passes indicated in the plans, the existing road surface or the newly constructed road.

(2) All pedestrian traffic shall be maintained along project corridor and it's side streets at all times. A minimum 48 inch wide pedestrian access route shall be provided along a minimum of one side of each street at all times, unless otherwise approved by the Engineer. The pedestrian access route shall comply with the accessibility requirements of the current version of ADAAG and PROWAG.

1. The Contractor shall prepare and submit to the Project Engineer traffic control plans and sign layouts no later than 14 days prior to beginning any construction. No work which restricts traffic will be permitted until the submitted traffic control plans and sign layouts have been approved by the Engineer.

2. Before any traffic restrictions will be permitted, the Contractor's plan for traffic control and methods must be approved by the Engineer.

3. During off peak hours as described and as approved by the Engineer, the Contractor will be permitted to restrict traffic to single a lane in each direction operation on TH 13, CSAH 5, Williams Drive as needed during the time periods that grading, utility, or surfacing operations are actually being performed. Prior to commencement of grading, utility, or surfacing operations and upon completion of said operations on a daily basis, traffic shall be restored on all traffic lanes.

4. Local access to abutting property must be maintained at all times**.** The Contractor is required to maintain road surfaces so that any necessary local traffic can safely travel within the project. Material needed for this maintenance shall be incidental and no direct compensation will be made. At all times throughout this project, the Contractor shall keep all directly affected property owners informed as to the appropriate access route being provided and maintained for them.

5. The Contractor must give the County a minimum of seven (7) days advance notice of road and/or intersection closures. Seven (7) days prior to closing sections of the road and/or intersections, the Contractor shall place an advance notice sign in each direction for the section to be closed as indicated in the Traffic Control Plans.

6. Street identification signage shall be maintained at all times. Where the only existing signs are small city or county signs located at the intersection, street names and address numbers shall be maintained by temporary installations as required by the Engineer. This is necessary to maintain the 911 emergency system.

7. Any transitions between old and new pavement sections that are placed for the winter shutdown must be gradual, uniform and safe for speeds normally traveled on these roads.

8. If, at any time, the Contractor fails to comply with the provisions of Section 1404, the Dakota County Engineer will notify the Contractor or any employee who has written authority to act in a supervisory capacity of the default. If the Contractor fails to take immediate action to remedy the unsatisfactory condition, the Dakota County Transportation Department may proceed to correct the unsatisfactory condition, so as to allow public traffic to move safely under its own power. The entire cost of this work will be deducted from monies due or to become due the Contractor.

9. As a precautionary measure from a soils standpoint, traffic lanes to be used during construction must be delineated to keep vehicles a safe distance away from the adjacent excavation. The delineation should coincide with points established by projecting 1:2 (rise:run) or greater (flatter) slope between the edge of the traffic surface and the bottom of the excavation. In areas of muck excavation, use 1:30 or flatter. Where sheeting is in place 2:1 (rise:run) can be used.

10. All signs installed on roads open to traffic that are not consistent with traffic operations during construction shall be covered as directed by the Engineer. The cover shall be a plate of solid opaque material covering the entire legend or all of that part of the legend that is inappropriate. This cover shall be bolted to the sign and plastic washers with a minimum thickness of 1/8 inch shall be installed between the sign face and the cover. See “Typical-Temporary Construction Sign Panel Overlay (Cover)” in Chapter 8 of the Mn/DOT Traffic Engineering Manual for applicable details.

11. The Contractor shall maintain, at all times, the existing traffic movements at intersections unless specific movement restrictions are allowed in the plans.

12. Access to existing entrances shall be maintained at all times except as follows:

    Where there is only one entrance to a property, the Contractor shall conduct his work to provide for vehicular ingress and egress to the property at all times.

13. The Contractor shall conduct all construction activities within parking lots, driveways, and entrance aprons, in a timely manner so as to minimally disrupt the daily operations of the affected adjacent property owners.

14. Pedestrian traffic shall be maintained and guided through the Project at all times. All sidewalk closures and pedestrian access route immediately adjacent to construction activities shall be delineated with pedestrian barricades and channelizing devices complying with ADAAG and PROWAG. These devices shall be continuous, stable and non-flexible. These devices shall also contain a continuous detectable base provided a maximum 6 inches above the walking surface or ground, and a continuous surface or upper rail 3 feet minimum above the walking surface or ground. Support members shall not protrude into the accessible route.

15. No access to or from any public road or at-grade crossing of any public road will be permitted for the contractor's equipment, material deliveries, the hauling of excavated materials of any kind, or employees' private vehicles, except at in-place public road intersections, or at locations and in such manner as approved by the Engineer.

16. At various locations and times within the project the new storm sewer work will not function properly without completing the storm sewer construction thru the existing roadways being used to carry traffic. In those locations where the completion of the underground construction through the open traffic lanes is essential to the project progress, and safety of the motoring public, the Contractor will be permitted to utilize the open trench method of construction thru the roadways in order to complete as much of the construction as is required for the drainage to function properly. See the Temporary Lane Closures section for specific requirements.

    Any construction through the roadways open to traffic shall be accomplished in accordance with the time restrictions set forth in the Temporary Lane Closure Requirements later in this section of these Special Provisions.

    One lane of traffic in each direction shall be maintained at all times during any construction activities through the roadways open to traffic unless otherwise approved by the Engineer. Bituminous patches will be required at all locations where the driving surface is disturbed and shall be installed prior to reopening the roadway to traffic.

17. As each road is completed, the Contractor shall install the final signing and pavement markings required to safely open that road to traffic. This work shall be completed on or before the date of opening as approved by the Engineer. Overhead signs may be temporarily ground mounted at the Contractor's expense.

18. The Contractor shall furnish, install, and maintain "ROAD WORK AHEAD" and "END ROAD WORK" signs in advance of and beyond each end of the construction limits as directed by the Engineer. The Contractor shall also furnish, install, and maintain "ROAD WORK AHEAD" signs in advance of the construction limits on all intersecting roads and streets as directed by the Engineer. The signs shall conform to the standards shown in the MN MUTCD. No direct compensation will be made to the Contractor for furnishing and erecting these signs. The signs shall remain the property of the Contractor.

S-11.3 TRAFFIC CONTROL

a) The Contractor shall be responsible for the immediate repair or replacement of all traffic control devices that become damaged, moved or destroyed, of all lights that cease to function properly, and of all barricade weights that are damaged, destroyed, or otherwise fail to stabilize the barricades. The Contractor shall further provide sufficient surveillance of all traffic control devices at least once every 24 hours.

The Contractors attention is directed to **Section 1506** of these Special Provisions for requirements regarding "on call" individuals responsible for traffic control devices.

b) If traffic control layouts are not present in the Plan, or the Contractor modifies the layout or sequence from the Plan, the Contractor shall submit the proposed traffic control layout to the Engineer, for approval, at least fourteen (14) days prior to the start of construction. At least 24 hours prior to placement, all traffic control devices shall be available on the Project for inspection by the Engineer. The Contractor shall modify his/her proposed traffic control layout and/or devices as deemed necessary by the Engineer.

c) The Contractor shall notify the Engineer in writing at least 72 hours prior to the start of any construction operation that will necessitate lane closure or internal traffic control signing.

d) The Contractor shall inspect, on a daily basis, all traffic control devices, which the Contractor has furnished and installed, and verify that the devices are placed in accordance with **the Traffic Control Layouts**, these Special Provisions, and/or the MN MUTCD. Any discrepancy between the placement and the required placement shall be immediately corrected.

The Contractor shall be required to respond immediately to any call from the Engineer or his designated representative concerning any request for improving or correcting traffic control devices. **If the Contractor is negligent in correcting the deficiency within one hour of notification the Contractor shall be subject to an hourly charge assessed at a rate of $500.00 per hour for each hour or any portion thereof with which the Engineer determines that the Contractor has not complied.**

e) The person performing the inspection in paragraph (d) above, shall be required to make a daily log. This log shall also include the date and time any changes in the stages, phases, or portions thereof go into effect. The log shall identify the location and verify that the devices are placed as directed or corrected in accordance with the Plan. All entries in the log shall include the date and time of the entry and be signed by the person making the inspection. The Engineer reserves the right to request copies of the logs as deemed necessary.

The Contractor shall be required to provide copies of the inspection logs, within the time frame agreed upon, when requested by the Engineer. **If the Contractor is negligent in providing the inspection logs within the time frame agreed upon, the Contractor shall be subject to an hourly charge assessed at a rate of $250.00 per hour for each hour or any portion thereof with which the Engineer determines that the Contractor has not complied.**

f) The third sentence in paragraph 2 in Mn/DOT 1404.7 (Winter Suspension) is hereby revised as follows:

"In the event that any Contractor-owned traffic control devices are damaged or destroyed making them in effective for their intended use, the Contractor will receive payment in the amount of the value of the traffic control device as determined by the Engineer."

g) If, at any time, the Contractor fails to, in a timely manner, properly furnish, install, maintain or remove any of the required traffic control devices, the County reserves the right to properly correct the deficiency. **Each time the County takes such corrective action, the costs thereof, including mobilization, plus $1,500 will be deducted from monies due or coming due the Contractor.**

S-11.4 MEASUREMENT AND PAYMENT

Traffic control will be measured and paid for as follows:

No measurement will be made of the various items that constitute Traffic Control, but all such work shall be construed to be included in the lump sum payment under Item **2563.601 "Traffic Control".** The lump sum payment shall be compensation in full for all costs of furnishing, installing, maintaining and removing the individual traffic control except for items identified additional traffic devices and paid for under a separate pay item.

Payment for furnishing, installing, maintaining, relocating and subsequently removing traffic control devices (including flag persons) as required will be made as a lump sum under **2563.601 "Traffic Control "** and according to the following schedule for the work under each Stage:

(1) When 5 percent of the Contract amount is earned, 25 percent of the amount bid for traffic control will be paid.
(2) When 10 percent, or more, of the Contract amount is earned, an additional 15 percent of the amount bid for traffic control will be paid.
(3) When 50 percent, or more, of the Contract amount is earned, an additional 35 percent of the amount bid for traffic control will be paid.
(4) When 75 percent, or more, of the Contract amount is earned, an additional 20 percent of the amount bid for traffic control will be paid.
(5) The remaining 5 percent bid for traffic control will be paid when all work has been completed and accepted.
(6) In all items above, the original Contract amount shall be the total value of all Contract Items including the traffic control item, but the percentage earned in each case shall be exclusive of the traffic control item.

S-11.5 VEHICLE WARNING LIGHT SPECIFICATION

All Contractors', subcontractors' and suppliers' mobile equipment, operating within the limits of the Project with potential exposure to passing traffic, shall be equipped with operable warning lights which meet the appropriate requirements of the SAE specifications. This would include closed roads that are open to local traffic only. This also includes any vehicle which enters the traveled roadway at any time. The SAE specification requirements are as follows:

360 Degree Rotating Lights - SAE Specification J845

Flashing Lights - SAE Specification J595

Flashing Strobe Lights - SAE Specification J1318

Lights shall be mounted so that at least one light is visible at all times when at eye level from a 18 m [**60 foot**] radius about the equipment. This specification is to be used for both day and night time operations. All costs incurred to provide warning lights shall be

at no cost to the County. These warning lights shall also be operating and visible when a vehicle decelerates to enter a construction work zone and again when a vehicle leaves the work zone and enters the traveled traffic lane.

Any warning lights shall be on the list of approved lights which may be obtained by contacting:

Vehicle Warning Lights
Office of Construction MS650
Transportation Bldg. OR by calling: (651)366-4216
395 John Ireland Blvd.
St. Paul, MN 55155

This list is updated periodically. Warning light suppliers and manufacturers may contact the above for information on adding new products to the list.

S-11.6 FLAGGER TRAINING

Any person acting as a flagger on this Project shall have attended a training session taught by a Contractor's qualified trainer. The Contractor's qualified trainer shall have completed a "Mn/DOT Flagger Train the Trainer Session" in the five years previous to the start date of this Contract and shall be on file as a qualified flagger trainer with the Department. The Flagger Trainer's name and Qualification Number shall be furnished by the Contractor at the pre-construction meeting. The Contractor shall provide all flaggers with the Mn/DOT Flagger Handbook and shall observe the rules and regulations contained therein. This handbook shall be in the possession of all flaggers while flagging on the Project. The Contractor shall obtain handbooks from the Department. Flaggers shall not be assigned other duties while working as authorized flaggers. The "Checklist for Flagger training" form shall be furnished to the Engineer any time a new flagger reports to work on the Project. The "Checklist for Flagger Training" form can be found at:
http://www.dot.state.mn.us/const/wzs/flaggerchecklist%20.pdf.

The Engineer will have the right to waive the above requirements.

S-11.7 TEMPORARY LANE CLOSURE REQUIREMENTS:

(A) Unless otherwise approved by the Engineer, any temporary lane closure that is adjacent to traffic, and is extending to or beyond 300 m [1000 feet] shall have a minimum of one Type III barricade, or 3 drums, placed in the closed lane for every 300 m [1000 feet] of extension. Any lane closure that is adjacent to traffic and inplace 3 days or more, shall use the Type III barricade only.

(B) All temporary lane closures shall have Type B Channelizers (drums, Type I or Type II barricades, vertical panel or Direction Indicator Barricades) in the lane closure taper and also in any shifts in traffic alignment.

(C) Short Term Duration lane closures will not be permitted during inclement weather, nor any other time when, in the opinion of the Engineer, the lane closure will be a greater than normal hazard to traffic.

(D) Temporary lane closures or other restrictions by the Contractor, during work hours and consistent with the time restrictions, will be permitted during those hours and at those locations approved by the Engineer. Requests for temporary

lane closures shall be made at least 24 hours prior to such closures. When a temporary lane closure is used by the Contractor, the closure shall be incidental work and no direct compensation will be made therefore.

(E) Temporary lane restrictions will not be permitted on TH 13 EB between the hours of 6:00 A.M. and 9:00 A.M **and** 3:00 P.M. to 7:00 PM **Monday through Friday**, and 3:00 P.M. to 6:00 PM Saturday and Sunday.

Temporary lane restrictions will not be permitted on TH 13 WB between the hours of 6:00 A.M. **and** 9:00 A.M **and** 3:00 P.M. to 7:00 PM **Monday through Friday**, and 3:00 P.M. to 6:00 PM **Saturday and Sunday**.

Work which will restrict or interfere with traffic shall not be performed between 12:00 noon on the day preceding and 9:00 A.M. on the day following any consecutive combination of a Saturday, Sunday and legal holiday. The Engineer will have the right to lengthen, shorten, or otherwise modify the foregoing periods of restrictions as actual traffic conditions may warrant.

The Engineer will have the right to lengthen, shorten, or otherwise modify the foregoing periods of restrictions as actual traffic conditions may warrant. **If the Contractor is negligent in adhering to the established time schedules, he shall be subject to an hourly charge assessed at a rate of $1000.00 per hour for each hour or any portion thereof with which the Engineer determines that the Contractor has not complied.**

(F) Temporary lane restrictions and/or closures for removing and/or erecting overhead structures will only be permitted between the hours of 1:30 A.M. and 5:00 A.M. as approved by the Engineer. If the Contractor requests to close the road and the Engineer approves that it is necessary to temporarily detour traffic in order to remove or set the structures, the Contractor shall furnish the detour as directed by the Engineer. The temporary detour shall be incidental work for which no direct compensation will be made. **If the Contractor is negligent in adhering to the established time schedules, he shall be subject to an hourly charge assessed at a rate of $1,000.00 per hour for each hour or any portion thereof with which the Engineer determines that the Contractor has not complied.**

The Contractor may stop all traffic on any road open to traffic to erect or remove overhead structures for periods of time not to exceed fifteen minutes only from 1:30 A.M. to 5:00 A.M. The Contractor shall allow sufficient clearance time between stopped periods so as to cause as little delay to traffic as possible. **If the Contractor is negligent in adhering to the established time schedules, he shall be subject to an hourly charge assessed at a rate of $500.00 per hour for each hour or any portion thereof with which the Engineer determines that the Contractor has not complied.**

(G) No center lane closures will be permitted. Only double lane closures as shown in the Field Manual of the MN MUTCD will be allowed at the times as directed by the Engineer. This may require night lane closures if traffic volumes warrant.

(H) The Contractor shall provide one vehicle or trailer mounted flashing arrow panel for each lane of each work area where traffic is restricted. The arrow panel shall meet the requirements of the MN MUTCD, and be on the qualified products list for flashing arrow panels found at: http://www.dot.state.mn.us/products/temporarytrafficcontrol/index.html ,and shall be equipped with a light that is visible to personnel in the work area to indicate that the unit is in operation. The flashing arrow panel shall be incidental to Traffic Control.

It is imperative that the Contractor continually operate each Flashing Arrow Panel at maximum legibility. Many factors, such as mechanical problems, insufficient charging, incorrect intensity settings, or other factors can degrade performance.

Except as approved by the Engineer, the Flashing Arrow Panel shall be stored off the shoulder when not in use. In the event the Engineer allows the arrow panel to remain on the shoulder, the arrow panel shall be delineated according to Layout 4 (Partial Shoulder Closure) in the field manual, as determined by the Engineer.

(I) The Contractor shall furnish flag persons as required to adequately control traffic. Flag persons shall conform to the requirements set forth in the MN MUTCD. All costs incurred to provide such flag persons shall be incidental to the lump sum traffic control.

(J) The Contractor shall provide two-way radios for flag persons.

Flag persons shall wear high visibility retroreflective safety vests, pants and hats at all times while actively flagging on the Project. High visibility apparel shall also comply with current Minnesota OSHA Rules 5207.0100 and 5207.1000. The flag persons clothing shall be considered an incidental expense for which no direct compensation will be made.

The Contractor will be subject to a non-compliant charge for failure to adhere to the clothing requirements as listed above. Non-compliance charges, for each incident, will be assessed at a rate of $**500.00 per incident** that the Engineer determines that the Contractor has not complied.

Except as otherwise authorized by the Engineer, the maximum length of the flagging operation shall be no more than 660 feet (1/8 mile).

The Contractor shall coordinate the flagging operations in a manner which causes as little delay to the traveling public as possible, and at no time shall the delay exceed five (5) minutes. In the event that the Contractor is unable to meet the maximum delay requirements, operations shall shut down until such time a new traffic control plan is developed which does meet the maximum delay requirement.

If hauling operations create hazards for the traveling public, the Contractor will be required to provide additional flaggers, as directed by the Engineer. All costs incurred to provide the additional flaggers shall be incidental to the lump sum traffic control.

(K) The Contractor shall furnish off-duty police officers in uniform with cars and an orange reflectorized vest to direct traffic if deemed necessary and so ordered by the Engineer. "Police Officer" means every officer authorized to direct or regulate traffic or to make arrests for violations of traffic rules. No direct payment for police officers will be made; this work shall be incidental to the lump sum traffic control.

(L) A Portable Changeable Message sign will be provided in advance of each temporary lane closure and in other areas shown in the plans and locations indicated by the engineer in the field to communicate real time information.

(PCMS) Type C Trailer Mounted Message Signs will be permitted and shall be on the qualified products list for portable changeable message signs as found at: http://www.dot.state.mn.us/products/temporarytrafficcontrol/index.html . It is imperative that the Contractor continually operate each PCMS at maximum legibility. Many factors, such as mechanical problems, insufficient charging, incorrect intensity settings, or other factors can degrade performance. If at any time the Contractor fails to operate a Portable Changeable Message Sign at maximum legibility, as determined by the Engineer, no payment will be made for each day that the Message Sign is deemed inadequate.

Except as approved by the Engineer, the message sign shall be stored off the shoulder when not in use. In the event the Engineer allows the message board to remain on the shoulder the message sign shall be delineated according to Layout 4 (Partial Shoulder Closure) in the field manual, as determined by the Engineer.

Payment for Portable Changeable Message Signs furnished and installed, as directed by the Engineer, will be made by the Unit Day as specified in **Section S-126 (2563) PORTABLE CHANGEABLE MESSAGE SIGN** of these Special Provisions.

S-11.8 GENERAL REQUIREMENTS:

(A) All portable sign assemblies shall be perpendicular to the ground. No traffic control device (signs, channelizing devices, arrowboards, etc.) shall be weighted so they become hazardous to motorists and workers. The approved ballast system for devices mounted on temporary portable supports is sandbags, unless it is designed, crash tested, and approved for the specific device. During freezing conditions, the sand for bags shall be mixed with a de-icer to prevent the sand from freezing. The sandbags shall be placed and maintained at the base of the traffic control device to the satisfaction of the Engineer.

When signs will remain in the same location for more than 30 consecutive days the signs shall be post mounted. This would not include portable signs which are set up and taken down at the beginning and end of each work shift. The signs must be post mounted according to the Typical Temporary Sign Framing and Installation Detail Sheet found in the Plan or in these Special Provisions.

(B) When signs are installed, they shall be mounted on posts driven into the ground at the proper height and lateral offset as detailed in the MN MUTCD. **When signs are removed, the sign posts and stub posts shall also be removed from the Right of Way within two (2) weeks or the Contractor shall be subject to a**

daily charge assessed at a rate of $100.00 per day for each day or portion thereof with which the Engineer determines that the Contractor has not complied.

(C) The Contractor shall be required to cover or remove all traffic control devices, including street signs as indicated by the Engineer, which may be inconsistent with traffic patterns during all traffic switches. The cover should be a plate of solid material covering the entire legend or all of that part of the legend that is inappropriate. This cover shall be bolted to the sign and shall use a minimum of 3 mm [**1/8 inch**] plastic washers between the sign face and the cover. See Figures 8.2A, 8.2B and 8.3C of the Traffic Engineering Manual for details. No additional payment will be made for removal or covering of inconsistent traffic control devices.

(D) Open excavation adjacent to the existing pavement will not be permitted on opposite sides of the roadway at the same time.

(E) The Contractor shall provide protective devices necessary to protect traffic from excavations, drop-offs, falling objects, splatter or other hazards that may exist during construction. This work shall be an incidental cost to the Contractor.

(F) The Contractor will not be permitted to park vehicles or construction equipment so as to obstruct any traffic control device. The parking of workers' private vehicles will not be allowed within the Project limits unless so approved by the Engineer.

Note 1 of Layout 2 of the field manual is hereby deleted. The Contractor will not be allowed to load or unload material or equipment on the shoulders of the roadway without a full shoulder closure using appropriate signs, barricades and channelizing devices as directed by the Engineer.

(G) The Contractor will not be allowed to store materials or equipment within 10 m [**30 feet**] of through traffic unless approved by the Engineer. If materials or equipment must be stored within 10 m [30 feet] of through traffic, the Contractor shall provide Type B channelizers, barricades or barriers, placed near the object to warn and protect traffic.

(H) All personnel working within the Right-of-Way shall wear reflectorized high-visibility apparel. All personnel shall adhere to the following HIGH VISIBILITY PERSONAL PROTECTIVE EQUIPMENT SPECIFICATION.

Each worker exposed to or working adjacent to moving motor vehicles as part of their assigned job shall be provided with and required to wear a high visibility safety apparel. High-visibility safety apparel means personal protective safety clothing that is intended to provide conspicuity during both daytime and nighttime usage, and meets the Performance Class 2 or 3 requirements of the ANSI/ISEA 107 – 2004 publication entitled “American National Standard for High-Visibility Safety Apparel and Headwear.”

If the high visibility apparel becomes faded, torn, dirty, worn, or defaced, reducing the conspicuity of the apparel, the apparel shall be removed from service and replaced.

The Contractor will be subject to a non-compliant charge for failure to adhere to the clothing requirements as listed above. **Non-compliant charges, for each incident, will be assessed at a rate of $500.00 per incident that the Engineer determines that the Contractor has not complied.**

(I) At the beginning of the Project, the Contractor shall store at least 10 (ten) extra Type III barricades, 20 (Twenty) extra retroreflective drums, and 2 (Two) Portable Changeable Message Signs at a convenient location within the Project limits, to be used at the discretion of the Engineer. No direct compensation will be made to the Contractor for furnishing and erecting these traffic control devices.

If additional devices, beyond the quantity specified above, are ordered by the Engineer the Contractor will be compensated according to Section (ADDITIONAL TRAFFIC CONTROL DEVICES) of this Special Provision.

(J) When work will be performed between the official hours of sunset and sunrise, all appropriate practices for night work will apply.

The Contractor shall provide sufficient numbers of light plants to adequately illuminate the work area as determined by the Engineer. All costs incurred to provide such light plants shall be incidental to the lump sum traffic control.

All Contractor's personnel, except operators who will remain in their vehicles at all times, shall wear reflectively striped (approximately 10 m [**33 feet**] of striping), highly visible, short sleeved one or two piece coveralls (color and striping pattern to be determined by the District Traffic Engineer), at all times while working on the Project. These coveralls shall be considered an incidental expense for which no direct compensation will be made. Any Contractor's employee found on the Project not wearing the prescribed reflective coveralls will be immediately ordered off the Project by the Engineer.

The Contractor shall provide a sufficient amount of 50 mm [**2 inch**] wide highly reflective vehicle marking tape to be applied to Contractor vehicles and equipment, as directed by the Engineer, and as provided by the manufacturer's instructions. This tape shall be considered an incidental expense for which no direct compensation will be made and shall be on the qualified products list for conspicuity vehicle sign sheeting as found at: http://www.dot.state.mn.us/trafficeng/qpl/Signing.pdf. Vehicle examples to be marked with tape are Contractor rollers, paver, millers and other equipment normally found in the lane closure.

(K) The Contractor shall provide a Traffic Control Supervisor. Payment and measurement will be made as provided in **Section S-122 (2563) TRAFFIC CONTROL SUPERVISOR** of these Special Provisions.

(L) Truck Mounted Attenuators (TMA'S)

If the Contractor establishes a mobile lane closure on a high speed roadway, any vehicle operating totally or partially in a traffic lane shall be equipped with a truck mounted attenuator that meets the requirements of NCHRP 350. The mobile lane closure shall meet the requirements described in the appropriate Field Manual layout.

(M) All temporary rigid signs shall be fabricated with an approved retroreflective sheeting material of the appropriate color, and be listed on the Qualified Product Listing (QPL) for either “Sheeting for Rigid Signs” or “High Performance Sheeting for Rigid Signs”. Signs remaining inplace that still apply during temporary operations need no change in sign sheeting.

To visually identify approved retroreflective sign sheeting on temporary rigid signs in the field signs shall have an easily identifiable marking on the face. This marking verifies that the sign sheeting is Approved for Rigid Sign Use as found on the APL. Although still required to meet sheeting standards, temporary rigid signs 4 sq. feet and under in size and all barricades and route markers will be exempt from this marking. The appropriate marking shall be used for each type of the approved sheeting types, consisting of Type IX and Type HP (also marked as DG3). Refer to the instructions for the marking of temporary signs which may be found on the APL or directly at the following link:
http://www.dot.state.mn.us/products/signing/common/typelabel.pdf

The retroreflective sheeting types and qualified products used for temporary signs and barricades can be found at:
http://www.dot.state.mn.us/trafficeng/products/MnDOTapprovedproductlist.xls.

S-11.9 MILLING AND PAVING OPERATIONS

(A) Milling and paving operations shall be completed over the full width of all traffic carrying lanes, including turn lanes, bypass, etc., under construction on each day’s run. At no time shall traffic be permitted on a milled surface for longer than 24 hours unless approved by the Engineer.

(B) When traffic is allowed to drive on the milled surface, the Contractor shall furnish and install "GROOVED PAVEMENT" and "BUMP" signs with "Advisory Speed" plates at locations determined by the Engineer. Payment for these signs shall be included in the lump sum payment for traffic control.

(C) Any drop-off where traffic will cross from or to the in place surface, or from or to the milled surface, shall be tapered and/or chamfered so as to provide for the safe passage of traffic.

(D) The Contractor shall schedule construction operations so as to minimize traffic exposure to uneven lanes, milled edges, and edge drop-offs. Only after every attempt has been made to avoid these conditions and one or more of them are deemed necessary, the Contractor shall provide and maintain the appropriate traffic control in accordance with the "DROP OFF GUIDELINES" in the MnMUTCD Field Manual.

(E) The Contractor shall not mill any notches for surfacing tapers until immediately prior to paving, except that with the Engineer's permission, the Contractor may mill the notches and install and maintain temporary bituminous tapers to provide for the safe passage of traffic until the surfacing taper is installed.

(F) The Contractor shall maintain traffic with a minimum of delay during milling and paving operations at intersections controlled by signals or by all-way stop signs. The Contractor shall provide off-duty police officers, at no expense to the

Department, to direct and control traffic around and through milling and paving operations at those intersections. "Police officer" means every officer authorized to direct or regulate traffic or to make arrests for violations of traffic rules.

(G) The Contractor may close intersecting streets to traffic, other than at intersections controlled by signals or "All Way Stop" signs during milling and paving operations in the intersection, but only if there are adequate alternate routes for the intersecting street traffic. The Contractor shall not close adjacent intersecting streets to traffic concurrently. The Contractor shall notify the local road authorities of its schedule to close intersecting streets 48 hours in advance of the closure. The maximum duration of the closure of intersecting streets during milling and paving operations shall be four (4) hours.

S-11.10 SIGNAL AND LIGHTING SYSTEMS

The Contractor shall not interfere with the operation of any traffic signal system, except as required by the Contract. The Contractor shall notify the Engineer at least 24 hours prior to beginning any work that will interfere with any traffic signal system or its detectors.

The Contractor shall furnish off-duty police officers with cars for directing and controlling traffic during such times as the existing or temporary signal system at each location is out of operation. "Police officer" means every officer authorized to direct or regulate traffic or to make arrests for violations of traffic rules. Off-duty police officers shall be furnished in such numbers as deemed necessary by the Engineer to direct traffic. Payment for police officers will be considered incidental to the lump sum traffic control.

During the period when the existing signal system is de-energized and the new signal system is energized, the Contractor shall furnish, erect, and maintain "Stop Ahead" signs and "Stop" signs. The quantity and size of the temporary signs as well as their placement in the field shall be as directed by the Engineer. The Contractor shall furnish and install materials to keep these signs upright and stationary. The signs shall remain the property of the Contractor.

The Contractor shall maintain street lighting by means of the in place lights, the newly constructed lights, or a combination thereof, except as otherwise authorized in writing by the Engineer.

S-11.11 ADDITIONAL TRAFFIC CONTROL DEVICES

In addition to the traffic control devices shown on the Traffic Control Layouts, and/or Field Manual, the Engineer may require more traffic control as traffic conditions may warrant. These items are not intended for temporary lane closures.

Additional traffic control devices include those necessary for safe traffic movements that were not anticipated in the Traffic Control Plans. Additional devices include warning signs, **directional signing for businesses**, flashers, barricades, drums, etc. that the Engineer may require.

Additional barricades or drums required for planned construction or road closures will not be considered extra. Traffic control required to protect the Contractor’s operations or for winter shutdown will not be considered extra.

If the Contractor performs construction work in a sequence other than that which the Plans show, the revised Traffic Control Plan **will not** be considered extra devices.

(A) General Requirements:

The Contractor shall furnish the additional traffic control devices as ordered by the Engineer. The devices shall be installed and maintained in a functional and/or legible condition, at all times, to the satisfaction of the Engineer.

(B) Measurement:

Flashers, barricades, reflectorized drums, portable changeable message signs, 48 x 48 inch signs, and flashing arrow boards will be measured by the number of individual units of each type multiplied by the number of Calendar Days each unit is in service.

Standard signs of each type, other than 48 x 48 inch signs will be measured by the face area of signs furnished multiplied by the number of Calendar Days each square foot of sign is in service.

Special construction signs will be measured by the face area thereof furnished and installed as specified.

Flag Persons and Police Officers will be measured by the length of time each is in service on the job. Police Officers shall be equipped with a car at all times on the job and the car shall be incidental in the payment for the Police Officer.

(C) Payment:

Payment for additional traffic control devices of each type, at the appropriate pre-determined Unit Day price set forth below, shall be compensation in full for all costs of furnishing, installing, maintaining, and subsequently removing and disposing of the device.

Payment for standard signs of each type, other than 48 x 48 inch signs, will be made at the appropriate pre-determined Square Foot/Day price which shall be payment in full for all costs of furnishing, installing, maintaining and subsequently removing and disposing of the signs.

The pre-determined Square Foot price for "Construction Signs - Special" shall be payment in full to furnish, install, maintain and remove such signs. All materials required to furnish and install these signs will remain the property of the Contractor.

Payment for Flag Persons and Police Officers will be by the Unit Hour for each hour or portion thereof that each is in service on the Project.

Payment for all additional traffic control devices, as ordered by the Engineer, will be made in accordance with the following schedule:

ADDITIONAL TRAFFIC CONTROL DEVICES

Item No.	Item	Predetermined Unit	Predetermined Price
2563.610	Flag Person	Hour	*
2563.610	Police Officer	Hour	**
2563.613	Type I Barricade w/Steady Burn Light	Unit Day	$1.05
2563.613	Type III Barricade	Unit Day	2.75
2563.613	Direction Indicator Barricade	Unit Day	1.25
2563.613	Reflectorized Plastic Safety Drum	Unit Day	0.85
2563.613	Reflectorized Plastic Safety Drum w/Down Arrow	Unit Day	0.95
2563.613	Weighted Traffic Channelizer	Unit Day	0.40
2563.613	Flasher Type A (Low Intensity)	Unit Day	0.50
2563.613	Flasher Type B (High Intensity)	Unit Day	1.75
2563.613	Flasher Type C (Steady Burn)	Unit Day	0.90
2563.613	48 x 48 inch Standard Sign	Unit Day	1.75
2563.613	48 x 48 inch Standard Sign w/Support	Unit Day	2.20
2563.613***	Portable Changeable Message Sign	Unit Day	225.00
2563.613****	Flashing Arrow Board (one shift)	Unit Day	33.00
2563.613****	Flashing Arrow Board (24 hour day)	Unit Day	45.00
2563.617*****	Standard Signs	SQ.FT./Day	0.10
2563.617*****	Standard Signs w/support	SQ.FT./Day	0.16
2563.618	Construction Signs - Special	SQ.FT.	25.00

* Shall be paid at the Contract Flagger Classification Total Rate, which is the Basic Rate plus the Fringe Rate.

** Shall be paid at the invoice price plus 10%

*** (PCMS) Type C Trailer Mounted Message Signs will be permitted. It is imperative that the Contractor continually operate each PCMS at maximum legibility. Many factors, such as mechanical problems, insufficient charging, incorrect intensity settings, or other factors can degrade performance. If at any time the Contractor fails to operate a Portable Changeable Message Sign at maximum legibility, as determined by the Engineer, no payment will be made for each day that the Message Sign is deemed inadequate.

**** It is imperative that the Contractor continually operate each Flashing Arrow Board at maximum legibility. Many factors, such as mechanical problems, insufficient charging, incorrect intensity settings, or other factors can degrade performance. If at any time the Contractor fails to operate the Flashing Arrow Board at maximum legibility, as determined by the Engineer, no payment will be made for each day that the Flashing Arrow Board is deemed inadequate.

***** Other than 48 X 48 inch Signs, with or without support.

NOTE: These predetermined unit prices apply only if not listed as separate bid items.
Barricades, drums and signs by the Unit Day shall be paid for up to 90 days per device. After 90 days, payment per Unit Day will continue at a reduced price of 40% of the Unit price.

S-12 (1407) FINAL CLEANUP

The provisions of Mn/DOT 1407 are supplemented as follows:

During the progress of the work, the area affected shall be kept clean and free of all rubbish and surplus materials. All unneeded construction equipment shall be removed from the site and all damage repaired so that the public and adjacent property owners are inconvenienced as little as possible.

Where materials or debris have washed or flowed into or have been placed in water courses, ditches, gutters, drains, catch basins, or elsewhere as a result of the Contractor's operations, such material or debris shall be removed and satisfactorily disposed of during progress of work. All ditches, channels, drains, etc., shall be kept in a clean and neat condition.

On or before the completion of work, the Contractor shall, unless otherwise directed in writing, remove all temporary works, tools and machinery or other construction equipment. All rubbish shall be removed from any grounds occupied by the Contractor. The Contractor shall leave all of the premises and adjacent property affected by the operation in a neat and restored condition satisfactory to the Engineer.

S-13 (1505) COOPERATION BY CONTRACTORS

The provisions of Mn/DOT 1505 are supplemented as follows:

S-13.1 Weekly construction meetings will be held during the course of the project. The time and place for these will be set during the preconstruction meeting. The meeting shall include the contractor’s superintendent and any subcontractor’s superintendent that will be working on the project during the following week along with representatives from the Counties, the Cities and the utility companies.

S-13.2 The State intends to call for bids on additional contracts for 1901-162 (TH 13), the work of which will be performed concurrently with the work under this Contract. Letting Date is scheduled for January 25, 2013. The proposed project is located on TH 13-westbound Bridge No. 9779 Over TH 35W and eastbound Bridge No. 9780 Over TH 35W in Burnsville. Work is Paint Steel Br. Beams, Etc.

S-13.3 The TH 35W ramp closures cannot happen prior to 2014 (as set forth in Stage 4A & 5A). This is due to 2013 work on 35W that would cause conflicts.

S-13.4 The City of Burnsville intends to call for bids on the Regional Minnesota River Quadrant (MRQ) Ponds 5/DuPont Ponding Project north of 126th Street. The City of Burnsville is studying a DuPont Avenue and Lady Bird Lane soil improvement project in 2013. Contact Ryan Peterson City Engineer 952-895-4459.

S-13.5 The Contractor shall coordinate his/her work and cooperate with the holders of those separate contracts, both present and future, and their forces in a manner consistent with the provisions of Mn/DOT 1505.

S-14 (1506) SUPERVISION BY CONTRACTOR

Supervision by the Contractor shall be in accordance with the provisions of Mn/DOT 1506 and the following:

S-14.1 At the Preconstruction Conference the Contractor shall designate in writing who the competent superintendent and competent individual (if different) will be for this Project. These persons can only be changed throughout the duration of the Project by submission of written authorization to the Engineer by the Contractor. The submittal of these persons shall be done before any work is performed on this Project.

S-14.2 A Superintendent from the Prime Contractor shall be on the project site during all phases of the work unless otherwise approved by the Engineer.

The Contractor will be subject to an hourly charge for failure to comply with the requirements of Mn/DOT 1506. Non-Compliance charges, for each incident, will be assessed at a rate of $100 per hour, for each hour or portion thereof, during which the Engineer determines that the Contractor has not complied. No charge will be made if the deficiency is corrected within one (1) hour of notification.

An incident of Non-Compliance will be defined as the receipt of a written work order by the Contractor with instructions to correct a deficiency.

S-14.3 The Contractor shall furnish names, addresses, and phone numbers of at least three (3) individuals responsible for the placement and maintenance of traffic control devices. These individuals shall be “on call” 24 hours per day, seven days per week during the times any traffic control devices, furnished and installed by the Contractor, are in place. The required information shall be submitted to the Engineer at the Pre-construction Conference.

S-15 (1507) UTILITY PROPERTY AND SERVICE

Construction operations in the proximity of utility properties shall be performed in accordance with the provisions of Mn/DOT 1507, except as modified below:

S-15.1 The provisions of Mn/DOT 1507.1 B are hereby deleted and the following substituted therefore:

B Gopher State One Call

The Contractor shall:

(1) Mark the proposed excavation in accordance with the Minnesota State Statute 216D color code before contacting "Gopher State One Call." The Contractor shall mark proposed excavation area with white paint and white flags or in lieu of white flags, white stakes may be used**.** The Contractor must adhere to all requirements of Gopher State One Call in addition to the following:

The white markings must delineate the **actual excavation area** where the locating of underground facilities is required. All flags and stakes shall display the name, and phone number of the Contractor. All areas of proposed excavation shall be considered “practical” for the use of white markings, pursuant to Minnesota Statutes §216D.05 (2).

(2) Call "Gopher State One Call" at least 48 hours (excluding Saturdays, Sundays, and holidays) before starting excavation operations.

(3) The Contractor shall acquire a Positive Response confirmation from Mn/DOT for all proposed excavations when the Gopher State One Call has indicated Mn/DOT utilities may be affected. The Contractor may call Mn/DOT Electrical Services Section (ESS) Dispatch Locating to confirm the status of Utility infrastructure owned by Mn/DOT. Mn/DOT Electrical Services Section (ESS) Dispatch Locating can be contacted at the following phone numbers; (651) 366 -5750 or (651) 366-5751. The Contractor shall be responsible for all damage to Mn/DOT owned Utility infrastructure if a Positive Response confirmation has not been acquired from Mn/DOT. The Contractor is required to comply with the provisions of Minnesota Statutes chapter 216D when performing Excavation as defined in Minnesota Statutes §216D.01 (subdivision 5), and will be responsible for damages to facilities in accordance with Minnesota Statutes §216D.06.

S-15.2 If the Contractor is negligent in adhering to Mn/DOT 1507.1 B, he will be subject to a daily charge assessed at a rate of $500.00 per excavation area per day for each day or any portion thereof with which the Engineer determines that the Contractor has not complied.

S-15.3 All utilities that relate to this Project are classified as "Level D," unless the Plans specifically state otherwise. This utility quality level was determined according to the guidelines of CI/ASCE 38-02, entitled "Standard Guidelines for the Collection and depiction of existing subsurface utility data."

S-15.4 By bidding on this Contract, the bidder agrees that it shall use the Plan to identify the location of Mn/DOT drainage facilities as satisfying the requirements of Minnesota Statutes Ch. 216D and Minnesota Rules 7560.0250 with respect to Mn/DOT's storm water drainage facilities.

S-15.5 The following utility owners have existing facilities that may be affected by the work under this Contract, all of which they intend where necessary to relocate or adjust in advance of or concurrently with the Contractor's operations.

Xcel Energy
Sprint Communications
AT&T Corporation
Century Link Communications Corporation
Minnesota Department of Transportation
Comcast Communications
Eventis Communications
Integra
Telecom
McLeod USA
Charter Communications
City of Burnsville
Dakota County
Magellan
CenterPoint Energy
Met Council Environmental Services

See http://www.dot.state.mn.us/utility for utility operators contact list.

S-15.6 Utility Relocation along south east frontage road shall be completed prior to start of retaining wall 5. Utilities which run longitudinal to the wall, must maintain a minimum of five (5) ft of horizontal separation to the wall footing. Wall Contractor must protect utilities during wall construction, and cost of said work will be incidental to cost of wall construction. The Contractor shall be responsible to determine the locations of sheet piling and/or shoring (if needed) based on the Contractor's construction operation.

Utility Relocation Plans are available email John.Sass@co.dakota.mn.us for electronic copies.

S-15.7 MAGELLAN MIDSTREAM PARTNERS INSURANCE

Contractors and its subcontractors shall procure and maintain in force throughout the entire term of this contract insurance coverage described below with insurance companies acceptable to Magellan for work performed related to the construction within 50 feet of the high pressure pipe line shown on in place utilities sheet 67 of the plan. All costs and deductible amounts will be the responsibility and obligation of the contractors and subcontractors. Magellan Midstream Partners, L.P. and its Affiliates as an additional insured. The limits set forth below are minimum limits and will not be construed to limit the Owner's liability:

Workers' Compensation insurance complying with the laws of the State or States having jurisdiction over each employee and Employer's Liability insurance with limits of $1,000,000 per accident for bodily injury or disease.

Commercial General Liability insurance on an occurrence form with a combined single limit of $5,000,000 each occurrence; and for project specific, an annual aggregate of $5,000,000. Coverage must include premises/operations, products/completed operations, and sudden and accidental pollution. Magellan Midstream Partners, L.P. and its Affiliates (hereinafter defined), and its and their respective directors, officers, partners, members, shareholders, employees, agents, and contractors shall be included as additional insureds. The term "Affiliate(s)" as used herein means, with respect to Magellan Midstream Partners, L.P., any individual, corporation, partnership, limited partnership, limited liability company, limited liability partnership, firm, association, joint stock company, trust, unincorporated organization, governmental body, or other entity (collectively, a "Person") that directly, or indirectly, through one or more intermediaries, controls, or is controlled by, or is under common control with Magellan Midstream Partners, L.P. The term "control" (including the terms "controlled by" and "under common control with"), as used in the previous sentence means the possession, directly or indirectly, of the power to direct or cause the direction of the management and policies of Magellan Midstream Partners, L.P. or such Person, as applicable, whether through ownership of voting stock, ownership interest or securities, by contract, agreement or otherwise.

The Sudden and Accidental Pollution can be a separate, stand alone policy, but must still meet the $5,000,000 minimum limit requirement. If the coverage is written on a claims-made policy form, the coverage must be maintained for two (2) years following completion of the work activities related to the Approved Encroachments.

In each of the above policies, the contractors and subcontractors agrees to waive and will require its insurers to waive any rights of subrogation or recovery either may have against Magellan and its affiliated companies.

Regardless of the insurance requirements above, the insolvency, bankruptcy, or failure of any such insurance company providing insurance for the contractors and its subcontractors, or the failure of any such insurance company to pay claims that occur, such requirements, insolvency, bankruptcy or failure will not be held to waive any of the provisions hereof.

In the event of a loss or claim arising out of or in connection with the construction of the Approved Encroachments, the Contractor agrees, upon request of Magellan, to submit a certified copy of its insurance policies for inspection by Magellan.

The Contractor shall require all of its contractors and subcontractors for work related to the construction within 50 feet of the High pressure Pipeline shown on Inplace Utilities Sheet 67 to provide adequate insurance coverage, all to be endorsed with the Waiver of Subrogation wording referenced in Section (d) above; any deficiency in the coverage, policy limits, or endorsements of said contractors and subcontractors, shall be the sole responsibility of the Contractor.

Indemnification. The contractor will indemnify, save, and hold harmless Magellan, its affiliated companies, directors, officers, partners, employees, agents and contractors from any and all environmental and non-environmental liabilities, losses, costs, damages, expenses, fees (including reasonable attorneys' fees), fines, penalties, claims, demands, causes of action, proceedings (including administrative proceedings), judgments, decrees and orders resulting from Company's breach of this Agreement or caused by or as a result of the construction, use, maintenance, existence or removal of the Construction within 50 feet of the High pressure Pipeline shown on Inplace Utilities Sheet 67 and other encroachments located on the Magellan Easement Tract. The presence of Magellan's representative or any instructions given by such representative will not relieve Company of any liability under this Agreement, except to the extent that such liability results from Magellan's or its representative's gross negligence or willful misconduct.

S-15.8 The City of Burnsville utilities that are affected such as storm sewer, sanitary sewer, and water supply have been included in the Plan for adjustment or relocation. The Contractor shall notify Ryan Peterson, City Engineer at telephone (952) 895-4459, in advance of the date he intends to start work and he shall furnish that office with such information as may be necessary to permit the responsible authorities to make suitable arrangements relative thereto.

S-15.9 The County’s Contractor shall coordinate his/her work and cooperate with the foregoing utility owners and their forces in a manner consistent with the provisions of Mn/DOT 1507 and the applicable provisions of Mn/DOT 1505.

The County shall not be held responsible for any delay that the Contractor may encounter by reason of the utility company involved failing to promptly do their necessary work. It shall be the Contractor’s responsibility to meet the affected utility companies as soon as possible to coordinate timely relocations.

S-15.10 Existing water and sewer mains, water and sewer services, and other underground utilities are shown on the plans only by general location based on field surveys and available as built information. The County does not guarantee that the utilities are complete or that the locations are as shown on the plans and the Contractor shall be solely responsible for verifying the exact location of each of these utilities.

As part of all utility construction, the Contractor may be required to excavate and locate existing municipal and private utilities prior to installing new utilities. This work shall be accomplished where directed by the Engineer with the Engineer determining elevations of the existing utility.

No deviation from the required line or grade for any utility work due to conflicts with existing utilities shall be made without the written consent of the Engineer.

S-15.11 The removal of portions of abandoned utility lines and pipes when required for the new construction will be considered incidental work and no direct compensation will be made therefore.

S-15.12 The County shall not be responsible for any delay that the Contractor may encounter by reason of the utility companies involving failing to carry out their necessary work in a timely manner. The Contractor should meet with the affected utility companies as soon as possible to coordinate timely relocations. The Contractor's only recourse against the County for delays caused by failure of the utility companies to adjust or relocate their facilities shall be limited to requesting time extensions for completion of the Contract.

S-15.13 Most utilities are located within the right of way under permits issued by the County. Utilities affected by this project are required to alter, change, vacate or remove their facilities to accommodate the highway construction prior to or concurrently with the Contractor's operations under this Contract. At those locations, where a conflict is encountered between the proposed construction and existing utilities, the County and the affected utility company will determine the method of proceeding to best complete the Project. It is the Contractor's responsibility to coordinate their work with the utility companies and preserve the existing condition of said utilities. All crossings shall be thoroughly backfilled and compacted, using mechanical tampers to prevent any displacement or settlement of the utility facility. It is the Contractor's responsibility to ensure adequate compaction of all utility trenches.

S-15.14 Construction of portions of the road fills and clearing operations under this project will be necessary to provide locations for utilities to relocate. The Contractor is encouraged to stage project work to facilitate utility relocation.

S-15.15 Wherever existing utility structures or branch connections thereof, present obstructions to the grade and alignment of new structures, the Engineer will provide new grade and/or alignment for the new utility or plan for revising the existing utility within one working day (24 hours) of the location of the existing utility. If the Contractor elects not to uncover existing utilities and a conflict between utilities occurs, the Contractor shall be required to relay pipe or revise the existing utility, as directed by the Engineer, with no additional compensation allowed therefore.

S-15.16 Prospective bidders are encouraged to contact the utility companies prior to submitting proposals for this project to help plan coordination of the highway construction with the utility relocations and adjustments.

S-15.17 Certain utilities along the corridor are located within privately held easements. Utilities that own private easements along the corridor include, but are not limited to; Magellan Midstream Partners, XCELL Energy Transmission, and MCES.

S-16 (1508) CONSTRUCTION STAKES, LINES AND GRADES

The provisions of Mn/DOT 1508 are hereby modified and supplemented as follows:

S-16.1 The following is hereby added to the first paragraph of Mn/DOT 1508:

At weekly intervals the Contractor shall provide a written priority list of Project staking segments for construction staking by the Engineer. As work progresses, the Engineer will schedule staking according to the priority list. If some change in priority is requested by the Contractor, there shall be at least 72 hours prior notice given to the Engineer, excluding non-work day, for remobilization of a survey crew to the revised priority staking.

All alignment and elevation control points will be marked by the County with lath furnished by the County. All survey stakes and hubs will be furnished by the County. However, the Contractor shall furnish lath for any construction stakes where he/she wants such visibility. The Engineer will place the Contractor's lath at the time of construction staking. Subcuts will not be staked unless there is a change in the Plan length.

S-16.2 The following is added to the third paragraph of Mn/DOT 1508:

Necessary staking for construction and inspection purposes will be provided by the County to the following extent:

(A) Centerline alignment, where needed for additional construction staking. Centerline alignment will not be replaced except as necessary for replacing of other construction stakes.

(B) Reference hubs (bluetops) at approximate 30 m [**100 foot**] intervals at a measured distance either side of centerline including cut of fill instructions for roadbed centerline and planned ditch grades.

(C) Line and grade stakes for pipe culvert, storm drain, and tile drainage work will be placed at the pipe ends, at each structure, any break in flow line grade or alignment, and at intervals along the pipe no less than 15 m [**50 feet**] apart.

(D) One set of subgrade bluetops, either on each subgrade shoulder or at centerline (Contractor's option), at 30 m [**100 foot**] intervals on tangent sections or curves flatter than 20 degrees, and at approximate 15 m [**50 foot**] intervals on curves of 2 degrees and sharper.

(E) Where gravel base and/or surfacing is a part of the work, one additional set of bluetop will be placed as in D above for either the top of the base or for the surfacing (Contractor's option).

S-16.3 The following is added to the fourth paragraph of Mn/DOT 1508:

The cost of replacing stakes and marks will be based on the actual number of hours of field and office work in accordance with the following wage and equipment rates:

	Hourly Rates
Engineer or Land Surveyor	$80 per hour
4-person crew	$240 per hour
3-person crew	$180 per hour
2-person crew	$125 per hour
1-person crew	$75 per hour

S-17 (1513) RESTRICTIONS ON MOVEMENT AND STORAGE OF HEAVY LOADS AND EQUIPMENT

The Contractor shall haul Materials and move and store equipment in accordance with the Highway Traffic Regulation Act and applicable provisions of Minnesota Rules when using public Roads or completed Structures, base courses, and pavements within the Project that are open to traffic and becoming a part of the permanent improvement.

The Contractor shall comply with legal load restrictions and with special restrictions required by the Contract when hauling or storing Materials and moving or storing equipment on Structures, completed Subgrades, base courses, and pavements within the Project, under construction or completed but not yet open to traffic.

The Contractor shall complete and place a cab card in each vehicle used for hauling bituminous mixture, aggregate, batch concrete, and grading material (including borrow and excess) before starting work. This cab card shall identify the truck or tractor and trailer by Minnesota or prorated license number and shall contain the tare, maximum allowable legal gross mass, supporting information, and the signature of the owner. The Contractor shall make the card available to the Engineer upon request. The Contract Unit Prices include Contractor-related costs in providing, verifying, and spot checking the cab card information, including weighing empty and loaded trucks on certified commercial scales.

The Contractor shall not operate equipment mounted on crawler tracks or steel-tired wheels on or across concrete or bituminous surfaces unless otherwise approved by the Engineer. The Contract requirements may impose special restrictions on speed, load distribution, surface protection, and other precautions.

When construction operations require crossing an existing pavement, Bridges, or completed portions of the Pavement Structure with otherwise prohibited equipment or loads, the Contractor shall use Department-approved methods of load distribution or bridging at no additional cost to the Department.

The Contractor will not be relieved of liability for damages resulting from the operation and movement of construction equipment because of the issuance of a special permit, or by adherence to any other restrictions imposed.

Unless otherwise required by the Contract or approved by the Engineer, the Contractor shall temporarily store or park construction Materials and equipment on a Bridge deck during Bridge construction in accordance with the limits of this section, established to reflect typical design live loads. The Contractor shall store Materials and equipment limited as follows:

(1) No stockpiles weighing greater than 65,000 lb per 1,000 ft² [31,702 kg per 100 m²],

(2) No individual stockpiles of Materials (including pallets of products, reinforcing bar bundles, and aggregate piles) weighing greater than 25,000 lb per 100 ft² [12,200 kg per 10 m²],

(3) No single vehicle or equipment exceeding 80,000 lb [36,300 kg], and

(4) No combination of more than 200,000 lb [90,700 kg] of vehicles, Materials, and other equipment per span with lengths greater than 40 ft [12.2 m].

If loading exceeds the above defined limits, the Contractor shall submit the proposed loads and structural analysis of the deck and beams certified by a Professional Engineer to the Bridge Engineer for the Bridge Engineer's review within a minimum of 7 calendar days before placement of loads.

S-18 (1514) MAINTENANCE DURING CONSTRUCTION

The provisions of Mn/DOT 1514 are supplemented with the following:

S-18.1 In addition to the Contractor's requirements for sweeping as required under Mn/DOT 2051 (Maintenance and Restoration of Haul Roads), the Engineer may require additional sweeping of roads adjacent to the construction site to provide safe conditions for the traveling public, environmental reasons, local regulatory requirements or as otherwise directed by the Engineer.

S-18.2 The Contractor shall maintain drainage for all temporary roadways and work sites at all times. When existing drainage facilities are severed or otherwise rendered inoperable the Contractor shall construct as much of the designed drainage system as may be necessary to maintain adequate drainage. Temporary grading and/or ditching may also be required to maintain drainage. Payment will be made at the appropriate Contract unit price for all permanent drainage facilities constructed. Any temporary grading and ditching that is required shall be completed as an incidental expense unless it is part of the designed project earthwork and it is totally removed and permanently disposed of. All temporary drainage work shall be completed to the satisfaction of the Engineer.

S-18.3 All side slopes adjacent to temporary bypasses shall be effectively maintained against erosion. In the event erosion occurs the Contractor shall reshape the slope to its original elevations and cross-section as an incidental expense for which no direct compensation will be made. This side slope maintenance is required to ensure the integrity and traffic carrying ability of the adjacent temporary bypass.

S-18.4 Payment for additional sweeping ordered by the Engineer will be made as specified below. (This price represents a shared cost.)

Pick Up Broom W/Operator	**$55.00 per hour**
Self Propelled Pavement Broom W/Operator	**$30.00 per hour**

S-19 (1517) CLAIMS FOR COMPENSATION ADJUSTMENT

The provisions of Mn/DOT 1517 are hereby supplemented with the following:

S-19.1 NOTICE OF CLAIM:

At the time the Contractor gives written notice of the claim, the Contractor and the Department shall immediately begin to keep and maintain complete and specific records to the extent possible. The records shall consist of, but are not limited to, cost and schedule records concerning the details of the perceived claim.

Unless otherwise agreed to in writing, the Contractor shall continue with and carry on the work and progress during the pendency of any claim, dispute, decision or determination by the Engineer, and any arbitration proceedings.

S-19.2 SUBMISSION OF CLAIMS:

The Contractor shall submit the claim to the Engineer no later than 60 Calendar Days after receiving written notice from the Engineer that direct damages (money or time due) resulting from the claim has occurred in the opinion of the Engineer. If, in the opinion of the Contractor, the direct damages have not fully occurred, the Contractor shall provide written justification detailing why the direct damages have not fully occurred. This written justification shall be submitted to the Engineer no later than 30 Calendar Days from receiving the notice from the Engineer. If proper justification is not given as required within the 30 Calendar Day requirement or the claim is not submitted to the Engineer within 60 Calendar Days after receiving notice from the Engineer that the direct damages have occurred, the Contractor waives all claims for additional compensation in connection with the work already performed.

The contents of the claim shall be in accordance with Mn/DOT 1517 and shall also include all scheduling documentation related to the claim

The Engineer shall have access to the Contractors records involved in the claim and, when so requested, shall furnish the Engineer copies of claim documentation.

The Contractor shall promptly furnish any clarification and additional information or data requested in writing by the Engineer.

All claims shall be submitted through the Contractor. Submission of claims directly from subcontractors shall constitute a waiver of that portion of the claim.

S-19.3 DECISION ON CLAIMS:

The Department intends to resolve claims at the lowest possible administrative level. Upon receipt of the claim, the Engineer will make a written decision in relation to any claim presented by the Contractor within the following time frames:

(A) For an adjustment in compensation, or other contractual dispute between the parties where the amount in controversy is $75,000.00 or less, 60 Calendar Days from the receipt of the Contractor's claim;

(B) For an adjustment in compensation, or other contractual dispute between the parties where the amount in controversy is more than $75,000.00, 90 Calendar Days from the receipt of the Contractor's claim.

Unless the Contractor and the Engineer otherwise stipulate in writing to a later time, if the Engineer does not make a decision or determination within these time frames, the claim shall be deemed denied.

When the Contract has established a dispute resolution process, that moves the dispute through various levels of both organizations, this process shall also be completed within the above time period.

S-19.4 MEDIATION:

Notwithstanding the formal claims procedures set forth in this Special Provision, the parties may at any time enter into nonbinding mediation by mutual agreement. If the parties agree to mediation, then the time requirements set forth above in **Section S-19.3 (A) and (B)** are suspended until the mediation is completed. The time and place for mediation, as well as selection of the mediator, shall be established by mutual agreement. The mediator's costs shall be divided equally between the Contractor and the Department. This payment shall be accomplished by the Contractor paying in full all costs and fees for the mediator and then submit the bill to the Engineer for 50 percent reimbursement. Either party may terminate mediation at any time.

S-19.5 RIGHTS OF ARBITRATION:

The decision of the Engineer in relation to the Contractor's claim shall be deemed final unless the Contractor commences a legal action within the time prescribed by law or unless the Contractor invokes arbitration as prescribed hereafter in these Special Provisions. Nothing herein contained shall be so construed as to preclude the Contractor from commencing a legal action in relation to claims for a single issue in excess of $75,000.00 but the Contractor's sole legal remedy in relation to claims of $75,000.00 or less shall be arbitration as prescribed hereafter in these Special Provisions. If the claim amount is in excess of $75,000, the Contractor and Mn/DOT may mutually agree to arbitration.

If the Contractor seeks to arbitrate a claim of $75,000 or less, the Contractor shall submit a written request for arbitration to the Department’s Claims Engineer in Mn/DOT’s Central Office within 30 Calendar Days after the Contractor’s receipt of the Engineer's decision. Failure to reasonably conform with this time requirement waives the right to arbitration. The scope of the arbitration proceeding shall be limited to the claim(s) that the Contractor previously presented to the Engineer for decision

S-19.6 ARBITRATION OF CLAIMS AND DISPUTES:

(A) For purposes of this section, a claim for adjustment in compensation shall mean an aggregate of operative facts which give rise to the rights which the Contractor seeks to enforce. Stated another way, a claim is the event, transaction, or set of facts that give rise to a claim for compensation. Any Contractor having a claim in excess of $75,000.00 may waive or abandon the dollar amount in excess of $75,000.00 so as to bring the claim within the scope of this section. However, the arbitration award shall not exceed $75,000.00. Various damages claimed by the Contractor for a single claim may not be divided into separate proceedings to create claims within the $75,000.00 limit.

(B) More than one separate claim may be presented at each arbitration hearing if agreed to by the Department, the Contractor, and the Arbitrator.

(C) Selection of the Arbitrator/ Optional Use of the American Arbitration Association:

a. Selection of the arbitrator shall be conducted by one representative of the Department and one representative of the Contractor. A single person shall represent the prime and all subcontractors involved in the claim. Separate representation for subcontractors during the selection of the arbitrator is not allowed.

b. The parties may mutually agree to have the arbitration process administered by the American Arbitration Association ("AAA").

c. The arbitration shall be administered by a single arbitrator.

d. The parties shall select an arbitrator by mutual agreement, or, if the parties have agreed to use the AAA to administer the process, shall select an arbitrator from a list of arbitrators provided by the Association in accordance with the Association's procedures.

(D) Arbitration Proceedings and Decision

a. All arbitration of claims shall be conducted in Minneapolis, Minnesota, or another mutually agreed upon location.

b. Regardless of whether the parties have agreed to use AAA to administer the process, the arbitration proceeding shall be in accordance with the Construction Industry Arbitration Rules of the American Arbitration Association then in effect and in accordance with the requirements below. The arbitration procedures set-forth in this Special Provision shall take precedence over conflicting American Arbitration Association requirements.

c. If mutually agreed to by both parties, the arbitration proceeding shall follow the Fast Track rules of the American Arbitration Association.

d. Unless otherwise agreed to by the parties, the arbitration hearing shall be bifurcated into a liability phase and, if needed, a valuation phase. No evidence or testimony regarding the value of the claim shall be presented during the liability phase.

e. The Contractor shall first present evidence to support the claim. The Department will then present evidence supporting its defense. Witnesses shall submit to questions or examinations. The arbitrator has the discretion to vary this procedure and shall afford a full and equal opportunity to all parties to be heard. Exhibits, when offered by either party, may be received in evidence by the arbitrator.

f. The arbitrator shall entertain motions, including motions that dispose of all or part of a claim or that may expedite the proceedings.

g. There shall be no ex parte communication between any party and an arbitrator.

h. When satisfied that the presentation of the parties is complete, the arbitrator shall declare the liability phase of the arbitration hearing closed. The arbitrator shall then determine whether Mn/DOT is liable.

i. If the Department is found to be liable, the arbitration proceeding shall continue before the same arbitrator to resolve all damages issues. The proceedings for this portion of the arbitration shall follow the procedures outlined in **Section S-19.6(D)e** of this Special Provision.

j. Within three Calendar Days after the close of the damages portion of the hearing, each party shall submit to the arbitrator their last best offers. The arbitrator shall be limited to awarding only one of the two figures submitted. In no event shall a claim award in arbitration exceed $75,000.

k. The decision or award of the arbitrator shall be:

i. In writing showing the basis for the decision or award. The arbitrator shall use the Contract and Minnesota law, or, in the absence of Minnesota law on the issue(s), other persuasive authority, as the basis for the decision.

ii. Final and binding on both the Department and the Contractor.

The award shall have the same finality as is accorded awards under the Uniform Arbitration Act, Minnesota Statutes Chapter 572.

(E) Arbitration Costs

a. Each party to the arbitration shall bear its own costs and fees assessed by the American Arbitration Association or independent arbitrator which shall be divided equally between the parties to the arbitration. This payment will be accomplished by the Contractor paying in full all costs and fees for the arbitrator and then submit the bill to the Engineer for 50 percent reimbursement.

b. Each party shall bear its own preparation costs.

S-20 (1601) SOURCE OF SUPPLY AND QUALITY

S-20.1 THE PROVISION OF MN/DOT 1601 ARE SUPPLEMENTED AS FOLLOWS:

The Contractor will furnish and use only steel and iron materials manufactured in the United States in executing the work under this Contract, in conformance with the provision of the U.S. Code of Federal Regulations 23CFR635.410. Domestic products taken out of the United States for any process (e.g. change of chemical content, permanent shape or size, or final finish of product) shall be considered foreign source materials.

All bids must be based on furnishing domestic iron and steel, which includes the application of the coating, except where the cost of iron and steel materials incorporated in the work does not exceed one-tenth of one percent of the total Contract cost or $2,500.00, whichever is greater. The state may approve the use of foreign iron and steel materials for particular Contract items, provided the bidder submits, a stipulation identifying the foreign source iron and/or steel product(s) and the estimated invoice cost

of the product(s), for one or more of the Contract bid items. Each stipulation shall be made on the "Stipulation for Foreign Iron or Steel Materials" form which shall be submitted with the Contractor's proposal. **If the Contractor chooses to use ANY non-domestic iron or steel, the Contractor must submit a stipulation with the proposal**.

Prior to completing work the Contractor shall submit to the Engineer a certification stating that all iron and steel items supplied are of domestic origin, except for non-domestic iron and steel specifically stipulated and permitted in accordance with the paragraph above.

S-20.2 SOURCE OF SUPPLY AND QUALITY.

Mn/DOT 1604 is supplemented as follows: All costs of shop inspection at plants outside the United States shall be borne by the Contractor. Such costs shall be deducted from monies due or to become due the Contractor.

S-20.3 PARTIAL PAYMENT.

All provisions for partial payments shall apply to domestic materials only. No payments shall be made to the Contractor for materials manufactured outside of the United States until such materials have been delivered to the job site.

S-21 (1602) NATURAL MATERIAL SOURCES

The provisions of Mn/DOT 1602 are supplemented with the following:

S-21.1 The expansion of any existing natural material sources, or the creation of new Natural Material Sources, will be subject to the requirements of the Farmland Protection Act of 1981 (FPPA or the ACT). Coordination to comply with FPPA shall be the responsibility of the Contractor. Contact the Natural Resources Conservation Service (NRCS) office for the county in which the source is located for further information.

S-22 (1606) STORAGE OF MATERIALS

The provisions of Mn/DOT 1606 are hereby supplemented with the following:

S-22.1 The Contractor is hereby advised that the only materials that will be allowed to be stockpiled within Project Limits are materials which will be incorporated into the Project and then only in the quantity needed. Materials cannot be stockpiled which are for use on other projects. This specification applies to manufactured and natural materials (including material stockpiled for crushing).

S-22.2 If the Contractor elects to crush excavated materials within the Project Limits, the quantity of crushed material will be limited to only the quantity required for this Project. The Contractor will not be allowed to crush materials other than those found within the Project Limits, unless approved in writing by the Engineer. The Contractor will not be allowed to remove crushed material from the Project Limits, unless approved in writing by the Engineer**. Crushing of materials will not be allowed within the Project Limits due to the potential for excessive noise and dust.**

S-23 (1701) LAWS TO BE OBSERVED (DATA PRACTICES)

The provisions of Mn/DOT 1701 are hereby supplemented with the following:

S-23.1 Bidders are advised that all data created, collected, received, maintained, or disseminated by the Contractor and any subcontractors in performing the work contained in this Contract are subject to the requirements of MN Statute Chapter 13, the Minnesota Government Data Practices Act (MGDPA). The Contractor shall comply with the requirements of the MGDPA in the same manner as the County The Contractor does not have a duty to provide access to public data to the public if the public data is available from the Department, except as required by the terms of the Contract.

S-23.2 Nothing in the Contract documents shall be construed to allow the Contractor to circumvent existing local ordinances that have an impact on its construction operations. The Contractor is hereby advised that it shall conduct its construction operations including, but not limited to, excavation, and hauling in accordance with all local ordinances. The Contractor shall become knowledgeable with all pertinent local ordinances and conduct its operations accordingly.

S-24 (1701) LAWS TO BE OBSERVED (BUILDING REMOVALS)

The provisions of Mn/DOT 1701 are modified and/or supplemented with the following:

S-24.1 The Contractor shall use Mn/DOT approved companies for testing, waste transport and disposal as provided and described in Mn/DOT's manual "Asbestos and Regulated Waste Manual For Structure Demolition Or Relocations for Construction Projects" available on the following website: http://www.dot.state.mn.us/environment/regulated-materials/index.html. Contact Mark Vogel, Office of Environmental Services, 651.366.3630 with any questions regarding the manual.

The Contractor shall only use Mn/DOT approved contractors for: building/bridge assessments, asbestos abatement and regulated waste oversight, asbestos removal, regulated waste removal, and regulated waste disposal and recycling (for a list of Mn/DOT Approved Contractors call 651.366.3630).

The Contractor shall use only MPCA permitted Combined Solid Waste Disposal Facilities to dispose of all solid waste including demolition debris. Demolition debris shall not be disposed of in a permit-by-rule landfill.

S-24.2 The successful bidding Contractor shall:

(A) Comply with the Environmental Protection Agency (EPA) Regulations, 40 CFR pt. 61, subd.M - NATIONAL EMISSION STANDARD FOR ASBESTOS.

(B) Provide the Minnesota Pollution Control Agency (MPCA) and the Engineer written notice of intention to demolish or move a structure - see form "Notification of Intent to Perform a Demolition" at http://www.pca.state.mn.us/publications/w-sw4-21.pdf. Such notice shall be provided to the MPCA and the Engineer a minimum of 10 working days before any move or demolition.

(C) And if the buildings contain any asbestos, the Contractor shall:

(1) Use a Minnesota Department of Health (MDH) certified oversight contractor to oversee the MDH certified asbestos abatement contractor.

(2) Depending on the amounts and types of asbestos on the premises Submit "Notification of Asbestos Related Work", to the Minnesota Pollution Control Agency and the Mn. Department of Health 10 working days prior to commencement of abatement activities. The Contractor shall submit a copy of the completed notification/s to the County Project Engineer at the same time.

(3) Submit all required documentation to the Minnesota Pollution Control Agency and the Mn Department of Health and copy the County Project Engineer on all submittals. Information on the requirements of MPCA can be found at: http://www.pca.state.mn.us/programs/asbestos_p.html. Information on the requirements of the Department of Health can be found at: http://www.health.state.mn.us/divs/eh/asbestos/index.html.

(4) Transport all asbestos containing waste in compliance with USDOT packaging and transportation requirements. The Contractor shall provide The County Project Engineer with all Asbestos Containing Material Transportation shipping papers/manifests. A Shipping paper can be obtained in part 61.145 on the following website: http://www.epa.gov/opptintr/asbestos/pubs/2003pt61.pdf

(5) Dispose of all asbestos containing waste in a Minnesota Pollution Control Agency permitted mixed municipal solid waste or Industrial landfill (not demolition debris landfills) permitted to accept asbestos containing wastes. Provide The County Project Engineer all landfill disposal receipts.

(D) Comply with Mn/DOT's manual "Asbestos and Regulated Waste Manual for Structure Demolition or Relocations for Construction Projects" available on the following website: http://www.dot.state.mn.us/environment/regulated-materials/index.html.

S-24.3 The successful Contractor shall comply with all Mn/DOT and Dakota County policy, laws, regulations and/or rules regarding the removal and recycling/disposal of any regulated wastes including, but not limited to: *see manual for procedures and approved contractors/end sites.*

1. Chlorofluorocarbons (CFC's):

   The Contractor shall use persons certified through 40 CFR pt 82 subp. F to evacuate CFC containing equipment that are affixed to the structure (central air conditioning, heat pumps etc). After the evacuation of all CFC's in the equipment the Contractor shall furnish the County Project Engineer with a MPCA Verification of Refrigerant Removal form: (http://www.pca.state.mn.us/air/pubs/veriffrm.pdf). Unattached equipment can be processed on site as above or sent to a Mn/DOT approved end site.

2. Polychloronatedbiphenols (PCB's)

3. Mercury

4. Lead

5. Other Regulated/Hazardous Waste

6. Solid Wastes

The transportation of all the above wastes shall be in compliance with USDOT packaging and transportation requirements. The Contractor shall provide the County Project Engineer with all shipping papers or manifests.

The Contractor shall provide the County Project Engineer with copies of disposal or recycling records.

S-24.4 FAILURE TO COMPLY WITH NOTIFICATION PROVISIONS WILL BE DEEMED A MATERIAL BREECH OF CONTRACT. IN THE EVENT THAT A REGULATORY AGENCY IMPOSES MONETARY SANCTIONS ON THE COUNTY THAT ARE BASED, IN WHOLE OR IN PART, UPON THE ACTS OR OMISSIONS OF THE CONTRACTOR, THE CONTRACTOR AGREES TO INDEMNIFY THE COUNTY AND TO HOLD COUNTY HARMLESS FOR SAME, EXCEPT TO THE EXTENT THAT ANY SANCTIONS WERE CAUSED BY THE COUNTY'S OWN NEGLIGENCE.

S-25 (1701) LAWS TO BE OBSERVED (CULTURAL RESOURCES)

The provisions of MnDOT 1701 are modified and/or supplemented with the following:

S-25.1 It will be MnDOT's responsibility to obtain a Cultural Resources Unit (CRU) determination of effect letter for MnDOT or the County's owned or leased Natural Material Sources if listed in the Construction Plan. It will also be MnDOT's responsibility to obtain a CRU Unit determination of effect letter for all Right of Way needed for this Project.

S-25.2 If the Contractor operations require the excavation and disposal of material off Public Right of Way, the Contractor is advised of the following:

MnDOT (CRU) will review the proposed excavation/disposal area to determine the effect to historic properties. The MnDOT CRU will obtain State Historic Preservation Office (SHPO) comment only when required by the current Section 106 Programmatic Agreement between the FHWA and SHPO, or, if no federal funds are involved, when required by the Minnesota Historic Sites Act and the Field Archaeology Act of Minnesota. The Contractor must request a review from the CRU, at Contractor's expense, before any material taken from the area can be used on State Projects or any disposal can be made in the area. This review may take up to 45 calendar days after receipt of the request (this time period includes up to 30 days for tribal consultation when necessary). Any time delays are the responsibility of the Contractor and are not a basis for claim for damages due to delay of Contract.

A) Required reviews may be obtained by contacting MnDOT's Cultural Resources Unit at:

Cultural Resources Unit
Office of Environmental Services
Minnesota Department of Transportation
395 John Ireland Blvd.
Mail Stop 620
St. Paul Minnesota 55155-1899
Telephone: 651-366-3604
Fax: 651-366-3603

Email: culturalresources.dot@state.mn.us

and the request must have a description of the project or disposal area as follows;

1. S.P. number and road number
   Legal location, including a precise location on a plat map (Township, range, section, county)
2. Location of area on a 7.5 minute 1:24,000 USGS topographic quadrangle map, with map name identified and pit, disposal, excavation area or embankment drawn to scale on the map.
3. Size of the area (in acres)
4. Current or past land use (e.g. agricultural)
5. Is excavation or disposal in a new area or an existing one?
6. If existing pit, is there a state pit number?
7. If existing pit, is the excavation or disposal to stay within existing pit margins?
8. What is the approximate thickness of the fill to be disposed of?
9. Is the excavation or fill going to be matched into the land? (e.g. edges contoured and returned to agricultural production)
10. Plot any buildings within one-fourth mile of the excavation and/ or disposal site area, along with a description of their apparent purpose (e.g. houses, barns) and their approximate age. Photographs of the buildings may be needed.
11. MnDOT Project Engineer name and telephone number.
12. Contact information for Contractor, name and telephone number.

B) The Contractor shall give the Project Engineer a copy of the MnDOT CRU determination of effect letter. If this letter states that there are **no historic properties affected**, no further action is required by the Contractor.

HOWEVER

C) When the MnDOT CRU requires a Cultural Resource Field Survey, the Contractor shall secure professional services to conduct a survey and prepare a report for the MnDOT CRU.

1. A list of qualified acceptable Archaeologists will be furnished to the Contractor by the MnDOT CRU, upon request.
2. When a Cultural Resource Field Survey is required, Contract time will be adjusted in accordance with MnDOT 1806 for any suspension of work required to comply with these requirements. No monetary claims due to delays or loss of time for off-site construction activity will be allowed.
3. The cost of the cultural resources survey and report are the Contractors responsibility.

The Contractor will **NOT** be given permission to use the proposed material resources site, disposal site, or embankment/excavation site until such time as the MnDOT CRU grants its permission.

S-26 1702) PERMITS, LICENSES, AND TAXES

Permits and licenses shall be procured and taxes paid in conformance with Mn/DOT 1702 and the following:

S-26.1 Bidders are advised that the County has applied to the following agencie for the necessary permits for grading, drainage, erosion control, and turf establishment, as represented in the Plans: Minnesota Pollution Control Agency

The various permits included in the Proposal for this project, as issued, shall be construed to be part of the Special Provisions in the Proposal. The conditions, requirements and restrictions of these permits shall be binding on the Contractor's operations under this Contract.

S-26.2 Bidders are advised that a permit has been submitted to the Minnesota Pollution Control Agency for the work shown in the Plans for drainage, erosion control, turf establishment, etc. The permit is included in the attachments and shall be construed to be part of these Special Provisions. The conditions, requirements and restrictions of the permit shall be binding on the Contractor's operations under this Contract.

The "Minnesota Pollution Control Agency, General Storm Water Permit for Construction Activity" is covered in **Section 1717 (NATIONAL POLLUTANT DISCHARGE ELIMINATION SYSTEM (NPDES) PERMIT)** of these Special Provisions.

S-26.3 The Contractor shall obtain and provide Dakota County with any mining permits which may be required. The Contractor shall make their own arrangements with suppliers or pit owners from which they elect to obtain the material and any payment that is required of the Contractor shall be made directly to the owner. Dakota County imposes upon every operator an aggregate materials production tax as per Mn. Statute §298.75. The Contractor will be required to submit an affidavit stating that the "gravel" tax has been paid before final payment will be made.

S-26.4 Bidders are advised that a permit will be obtained by the City from the Minnesota Council of Environmental Services for the adjustment of MCES manholes and city sanitary sewer improvements. The conditions, requirements and restrictions of the permit shall be binding on the Contractor's operations under this Contract.

S-26.5 Bidders are advised that Plan Review for Community Water Systems will be obtained by the City from the Minnesota Department of Health for watermain construction. The conditions, requirements and restrictions of the Minnesota Department of Health shall be binding on the Contractor's operations under this Contract.

S-26.6 Bidders are advised that a permit has obtained from the MPCA for excavation of potentially contaminated soils the conditions, requirements and restrictions of the permit (Response Action Plan and Construction Contingency Plan) shall be binding on the Contractor's operations under this Contract. See Notice to Bidders (Specifications) attachment Response Action Plan.

S-26.7 The Contractor shall obtain permits required by Minnesota Department of Natural Resources (Mn/DNR) if total discharge from dewatering wells is anticipated to exceed, or actually exceeds 10,000 gallons per day, or 1,000,000 gallons per year **Sections S-35.4 (1717) NPDES Permit and S-62 (2105) Dewatering.**

S-26.8 The Contractor shall amend or obtain applicable permits for any construction method they propose to use, not covered by the approved permits on file.

S-27 (1706) EMPLOYEE HEALTH AND WELFARE

The provisions of Mn/DOT 1706 are supplemented with the following:

S-27.1 All construction operations shall be conducted in compliance with applicable laws, regulations and industry standards as described in Mn/DOT 1706. The Contractor shall be considered to be **fully responsible** for the development, implementation and enforcement of all safety requirements on the Project, notwithstanding any actions Mn/DOT may take to help ensure compliance with those requirements.

S-27.2 The Contractor shall submit a written safety program to the Engineer at the pre-construction conference addressing safety issues for all Project activities. This program shall contain name(s) of person(s) responsible for all safety requirements and this Contractor's Designee(s) shall be available at all times that work is being performed. The Contractor's designee(s) shall be responsible for correcting violations on the Project as observed by the Engineer or his/her representative.

S-27.3 The Contractor shall not use any motor vehicle equipment on this Project having an obstructed view to the rear unless:

(A) The vehicle has a reverse signal alarm which is audible above the surrounding noise level; or

(B) The vehicle is backed up only when an observer signals that it is safe to do so.

S-27.4 **A $500.00 monetary deduction (per incident) will be assessed by Mn/DOT for violations of safety standards and requirements that have the potential for loss of life and/or limb of Project personnel or the public.** The areas of special concern include, but are not limited to excavation stability protection, fall protection, protection from overhead hazards, vehicle backup protection, confined space safety, blasting operations, and personal safety devices.

S-27.5 None of the monetary deductions listed above shall be considered by the Contractor as allowance of noncompliance incidents of these safety requirements on this Project.

S-28 (1707) PUBLIC CONVENIENCE AND SAFETY

Metro Transit has bus service in the Project area which will be affected by this construction. The Contractor shall notify the following Metro Transit representative prior to the start of the Project:

Lisa Johnson
Manager of Street Operations
Lisa.Johnson@metc.state.mn.us
Telephone: 612/349-7570

Burnsville Public Schools has bus service in the Project area. The Contractor shall notify the Company prior to the start of the Project as follows:

Jon Deutch
Transportation Director
Burnsville – Eagan – Savage Independent School District 191
100 River Ridge Court
Burnsville, MN 55337
Email: jdeutsch@burnsville.k12.mn.us
Telephone: 952/707-2035

S-29 (1710) TRAFFIC CONTROL DEVICES

All traffic control devices and methods shall conform to the Minnesota Manual on Uniform Traffic Control Devices (MN MUTCD), Minnesota Standard Signs Manuals Parts I and II, the Traffic Engineering Manual, and the following:

S-29.1 On any roadway having a 45 mph or higher speed limit prior to construction, all Category I and II temporary traffic control devices shall meet NCHRP 350 crash testing criteria. This includes all new and used Category I and Category II devices. Category I devices include tube markers, plastic drums and cones, etc. Category II devices include portable sign supports, Type I, II and III barricades, etc.

The Contractor shall provide the Project Engineer a Letter of Compliance stating that all of the Contractors Category I and II Devices are NCHRP 350 approved. The Letter of Compliance must also include approved drawings of the different signs and devices and shall be provided to the Project Engineer at the Pre-construction meeting.

S-29.2 The provisions of 1710 are revised as follows:

Mn/DOT 1710.3, 1710.4, 1710.5(a) and 1710.8 are deleted. As required in the Plans and elsewhere in these Special Provisions, the Contractor shall furnish, erect, and maintain all traffic control devices required to safely provide for traffic during all stages of the project.

S-29.3 All traffic control devices shall have Type XI sheeting.

S-30 (1712) PROTECTION AND RESTORATION OF PROPERTY AND LANDSCAPE

Bidders are advised that they may review any environmental documents and permits concerning this Project prior to bidding. The Department's contact persons are as follows:

ENVIRONMENTAL DOCUMENTS:

John Sass
Transportation Project Manager
Dakota County Transportation Department
14955 Galaxie Avenue, 3rd Floor
Apple Valley, MN 55124
(952) 981-7130

PERMITS:

Ross Beckwith, P.E.
Dakota County Construction Engineer
2800 160th St. West
Rosemount, MN 55068
952-891-7926

S-31 (1714) RESPONSIBILITY FOR DAMAGE CLAIMS; INSURANCE

The provisions of 1714 are supplemented as follows:

The State of Minnesota shall be named as an additional insured on any insurance coverage which the contractor is required to provide.

S-32 (1716) CONTRACTOR'S RESPONSIBILITY FOR WORK

The provisions of 1716 are supplemented as follows:

All warranties provided by contractor, for the work performed on the trunk highway, will flow to, and be enforceable by, the State as the owner of such improvements.

S-33 (1717) AIR, LAND AND WATER POLLUTION

The provisions of Mn/DOT 1717 are supplemented and/or modified with the following:

S-33.1 DISCOVERY OF CONTAMINATED MATERIALS AND REGULATED WASTES

If during the course of the Project, the Contractor unexpectedly encounters any of the following conditions indicating the possible presence of contaminated soil, contaminated water, or regulated waste, the Contractor shall immediately stop work in the vicinity, notify the Engineer, and request suspension of work in the vicinity of the discovery area, in accordance with Mn/DOT 1803.4.

A documented inspection and evaluation will be conducted prior to the resumption of work. The Contractor shall not resume work in the suspected area without authorization by the Engineer.

(A) Indicators of contaminated soil, ground water or surface water include, but are not limited to the following:

(1) Odor including gasoline, diesel, creosote (odor of railroad ties), mothballs, or other chemical odor.

(2) Soil stained green or black (but not because of organic content), or with a dark, oily appearance, or any unusual soil color or texture.

(3) A rainbow color (sheen) on surface water or soil.

(B) Indicators of regulated wastes include, but are not limited to the following:

(1) Cans, bottles, glass, scrap metal, wood (indicators of solid waste and a possible dump)

(2) Concrete and asphalt rubble (indicators of demolition waste).

(3) Roofing materials, shingles, siding, vermiculite, floor tiles, transite or any fibrous material (indicators of demolition waste that could contain asbestos, lead or other chemicals).

(4) Culverts or other pipes with tar-like coating, insulation or transite (indicators of asbestos).

(5) Ash (ash from burning of regulated materials may contain lead, asbestos or other chemicals).

(6) Sandblast residue (could contain lead).

(7) Treated wood including, but not limited to products referred to as green treat, brown treat and creosote (treated wood disposal is regulated).

(8) Chemical containers such as storage tanks, drums, filters and other containers (possible sources of chemical contaminants).

(9) Old basements with intact floor tiles or insulation (could contain asbestos), sumps (could contain chemical waste), waste traps (could contain oily wastes) and cesspools (could contain chemical or oily wastes).

S-33.2 Mn/DOT 1717.2 A2 is hereby deleted and replaced with the following:

A2 During Construction

The Contractor shall implement the Project's Storm Water Pollution Prevention Plan. The Contractor shall schedule and install temporary and permanent sediment and erosion control measures, construct ponds and drainage facilities, finish earth work operations, place topsoil, establish turf, and conduct other Contract work in a timely manner to minimize erosion and sedimentation.

All exposed soil areas with continuous positive slopes that are within 60 m (**200 feet**) of a public water shall have temporary or permanent erosion protection within 24 hours after <u>the construction activity in that portion of the site has temporarily or permanently ceased</u> and connection is established to the public water. All other positive slopes to constructed surface waters, such as permanent storm water treatment ponds, curb and gutter systems, storm sewer inlets, temporary or permanent drainage ditches, or other storm water conveyance systems, shall have temporary erosion protection or permanent cover for the exposed soil areas as soon as practicable but no later than 14 days after construction activity has temporarily or permanently ceased in that area. For those drainage areas that have a discharge point within 1 mile and flows to an impaired or Special Waters shall have temporary erosion protection or permanent cover for the exposed soil areas as soon as practicable but no later than 7 days after construction activity has temporarily or permanently ceased in that area. Impaired and Special Waters are defined as those listed and referenced in the NPDES Permit.

<u>Positive slopes adjacent to public waters and wetlands will be stabilized at the close of each day when weather forecasts for rain that evening, and/or overnight including weekends. Once work is completed it will be stabilized permanently as soon as practical but no later than seven days.</u>

Exposed soil areas do not include; stockpiles or surcharge areas of sand, gravel, aggregate, concrete, bituminous, or road bed and surfacing material. A perimeter

sediment barrier may be necessary to minimize loss when these are within the 60 m (**200 feet**) of existing surface waters or the property edge.

The bottom of temporary or permanent drainage ditches or swales constructed to drain water from a construction site must be stabilized with erosion control measures for the last 60 m (**200 feet),** or more when conditions warrant, from the property edge or from the point of discharge to any existing surface water. Stabilization shall be completed within 24 hours after the construction activity in that portion of the ditch has temporarily or permanently ceased. Ditch stabilization will continue concurrently with construction activities but no later than 14 days after construction activities have permanently or temporarily ceased. Any, culvert pipe or storm sewer pipe that is within the cumulative distance is not part of this distance. Ditch checks may be provided where necessary to slow water flow and capture sediment.

Temporary or permanent ditches used as treatment systems will not need to be stabilized but must provide the proper Best Management Practices for the treatment system.

Pipe outlets shall be provided with temporary or permanent energy dissipation within 24 hours of connecting the pipe to any constructed or existing surface waters.

The Contractor shall limit the surface area of erodible soil that can be exposed to possible erosion at any one time when the permanent erosion control features are not completed and operative.

All liquid and solid wastes generated by concrete washout operations must be contained and not have the opportunity to come in contact with the surface waters or ground water**.** This includes the ditches, slopes to ditches, curb and gutter/stormsewer systems, and ponds. Areas where there are sandy soils, karsts, and high ground water the washout facility must have an impermeable liner. Liquid and solid wastes must be disposed of properly. A concrete washout sign must be installed adjacent to each washout facility to notify personnel.

S-33.3 Mn/DOT 1717.2E is hereby deleted and replaced with the following:

E Site Plans

The Engineer may require the Contractor to submit a site plan, in writing, detailing proposed erosion control and sediment control measures and a schedule indicating starting and completion times for construction operations working in water bodies and/or in direct proximity to waters of the state.

Contractor shall not start work in the affected areas until the schedule and site plan have been accepted by the Engineer and all materials and equipment for the activity are on site.

S-33.4 EXTREME WEATHER EVENT

If localized flooding is caused by an extreme weather event and results in discharge into surface water, by deliberate pumping or diverted flow, the Contractor shall provide for end of trench or pipe filtration or treatment systems. The filtration/treatment system shall be capable of preventing visibly turbid discharge from entering surface water. This work shall be completed in accordance with applicable laws pertaining to discharge into

surface waters and as directed by the Engineer. The Contractor will receive compensation as Extra Work in accordance with Mn/DOT 1904.

S-34 (1717) AIR, LAND AND WATER POLLUTION (CONCRETE GRINDING)

The provisions of Mn/DOT 1717 are supplemented and/or modified with the following:

S-34.1 All slurry material shall become property of the Contractor and must be disposed of as per Mn/DOT 2104.3C3 as approved by the Engineer, and as described below.

All concrete residue and water (slurry) resulting from concrete grinding operations must be continuously vacuumed from the surface, captured, and containerized for further handling or processing. The slurry must not be permitted to flow across lanes occupied by traffic, flow into drainage facilities or discharge anywhere within the highway Right of Way. The Contractor must submit a slurry disposal or reuse plan at the preconstruction conference for approval by the Engineer.

The method to manage the slurry may require separation of the solids from the liquids. This separation may be achieved mechanically by centrifuging or passively by allowing settlement of the fines to occur in a temporary impermeable lined containment area. If a temporary containment area is used within the highway Right of Way, a Site Plan as per 1717 will be required for the Engineer's approval. The minimum Site Plan shall include methods for storm water protection at the temporary containment area, a description of the proposed separation method, and the process for final removal and restoration of the disturbed containment area. For any method used to separate the liquid from the solids, the Contractor shall identify the name and location of the publicly owned treatment works facility (POTW) that the liquids will be deposited in, or how the processed water will be reused by the Contractor.

As part of the slurry disposal or reuse plan, the Contractor must be able to provide, upon request, documentation that identifies the name and location of the MPCA permitted lined mixed municipal solid waste (MMSW) or industrial landfill that the solids will be deposited in, or identifies any alternative methods of disposal or reuse that meet environmental requirements of regulated industrial waste.

The Contractor shall hold Mn/DOT harmless for any fines or sanctions caused by the Contractor's actions or inactions regarding compliance with concrete slurry management and disposal. All materials and labor for installation of storm water protection practices, maintenance, control, removal and disposal for the management of concrete slurry is incidental to the concrete grinding operation.

S-35 (1717) NATIONAL POLLUTANT DISCHARGE ELIMINATION SYSTEM (NPDES) PERMIT

Pollution of natural resources of air, land and water by operations under this Contract shall be prevented, controlled, and abated in accordance with the rules, regulations, and standards adopted and established by the Minnesota Pollution Control Agency (M.P.C.A.), and in accordance with the provisions of Mn/DOT 1717, these Special Provisions, and the following:

S-35.1 Minnesota Pollution Control Agency General Permit, Authorization to Discharge Storm Water

A. The Contractor shall furnish, install and maintain temporary and permanent

erosion and sediment control devices in accordance with the provisions of 2105.5, 2573, 2575, as shown in the Plans, in accordance with the provisions of the Special Provisions Attachment “Minnesota Pollution Control Agency General Permit, Authorization to Discharge Storm Water", and the following:

The County of Dakota has applied for coverage under the above mentioned permit by signing both the Owner's and Contractor's certification blanks on the permit application. The County shall retain a photocopy of the original permit application. Upon award of the Contract, the County and the Contractor shall execute the Storm Water Permit Transfer**/**Modification Application form (attached to these Special Provisions) and submit it along with a photocopy of the original application to the Minnesota Pollution Control Agency. The Minnesota Pollution Control Agency, upon receipt of the Storm Water Permit Transfer Modification Application, will amend it to the original permit application thereby making both the County and the Contractor co-permittees for the requirements of the General Permit, "Authorization to Discharge Storm Water."

B. There is no fee for the transfer of the permit. Work may not begin until all transfer permit forms are signed and dated and the contractor identifies by name a person knowledgeable and experienced in the application and implementation of the Storm Water Pollution Prevention Plan, and has developed a chain of responsibility for all operators (subcontractors) on the site, in accordance to Part III.A.1 of the General Permit.

S-35.2 The Contractor shall be solely responsible for complying with the requirements in Part II.B and Part IV of the General Permit.

The Contractor shall be responsible for providing all inspections, documentation, record keeping, maintenance, remedial actions, repairs required by the permit. All inspections, maintenance, and records required in the General Permit Part IV.E, Inspections and Maintenance, shall be the sole responsibility of the Contractor. The word "Permitee" in these referenced paragraphs shall mean "Contractor". Standard forms for logging all required inspection and maintenance activities shall be used by the Contractor. All inspection and maintenance forms used on this Project shall be turned over to the Engineer every two weeks for retention in accordance with the permit. A Non-compliance charge will be assessed at a rate of $150.00 per day per incident, for each day thereof, which the Engineer determines that the Contractor has not complied.

The Contractor shall have all logs, documentation, inspection reports on site for Engineer's review and shall post the permit and MPCA’s letter of coverage on site. The Contractor shall immediately rectify any shortcomings noted by the Engineer. All meetings with the MPCA, Watershed District, WMO, or any local authority shall be attended by both the Engineer and the Contractor or their representatives. No work required by said entities, and for which the Contractor would request additional compensation from the County, shall be started without approval from the Engineer. No work required by said entities and for which the changes will impact the design or requirements of the Contract documents or impact traffic shall be started without approval from the Engineer.

The Contractor shall immediately notify the Engineer of any site visits by Local Permitting Authorities performed in accordance with Part V.H.

S-35.3 Emergency Best Management Practices must be enacted to help minimize turbidity of surface waters and relieve runoff from extreme weather events. It is required to notify the MPCA Regional Contact Person within 2 days of an uncontrolled storm water release. The names and phone numbers of the MPCA Regional Contract personnel can be found at: http://www.pca.state.mn.us/water/stormwater/stormwater-c.html. The Contractor is reminded that during emergency situations involving uncontrolled storm water releases that the State Duty Officer must be contacted immediately at 1-800-422-0798 or 1-651-649-5451.

S-35.4 The Contractor is advised that **Section** 1 of the NPDES application form makes a reference to Storm Water Pollution Prevention Plan (SWPPP). This Project's SWPPP is addressed throughout Mn/DOT's Standard Specifications for Construction, as well as this Project's Plan and these Special Provisions. The following table identifies NPDES permit requirements and cross-references where this Contract addresses each requirement.

NPDES Permit Requirements	**Cross-Reference within this Contract**
Obtain NPDES Permit; Permit Compliance; Submit Notice of Termination	Mn/DOT 1701, 1702; Special Provisions: 1717 (Air, Land & Water Pollution), 1717 (National Pollutant Discharge Elimination System (NPDES) Permit)
Certified Personnel in Erosion / Sediment Control Site Management Develop a Chain of Command	Mn/DOT 1506, 1717, and 2573; Special Provisions: 1717 (Air, Land & Water Pollution), 1717 (National Pollutant Discharge Elimination System (NPDES) Permit); and 2573 (Erosion Control Supervisor).
Project / Weekly Schedule (for Erosion / Sediment Control) Completing Inspection / Maintenance Log / Records	Mn/DOT 1717 and 2573; Special Provisions: 1717 (Air, Land & Water Pollution), 1717 (National Pollutant Discharge Elimination System (NPDES) Permit); and
Project Specific Construction Staging	The Plans; Mn/DOT 1717; Special Provisions: 1717 (Air, Land & Water Pollution), 1717 (National Pollutant Discharge Elimination System (NPDES) Permit); and 1806 (Determination and Extension of Contract Time)
Temporary Erosion / Sediment Control	The Plans; Mn/DOT 2573 and 2575
Maintenance of Devices / Sediment removal Removal or Tracked Sediment	The Plans; Mn/DOT 1717 and 2573; Special Provisions:

Removal of Devices	1514 (Maintenance During Construction); 1717 (Air, Land & Water Pollution), and 1717 (National Pollutant Discharge Elimination System (NPDES) Permit
Dewatering	Mn/DOT 2105.3B and 2451.3C; May also require DNR Permit
Temporary work not shown in the Plans Grading areas (unfinished acres exposed to erosion)	Mn/DOT 1717, 2573, and 2575; Special Provisions: 1717 (Air, Land & Water Pollution), and 1717 (National Pollutant Discharge Elimination System (NPDES) Permit);
Permanent Erosion / Sediment Control and Turf Establishment	The Plans; Mn/DOT 1717, 2573 and 2575; Special Provisions: 1717 (Air, Land & Water Pollution), 1717 (National Pollutant Discharge Elimination System (NPDES) Permit

S-35.5 If the Contractor fails to perform the requirements as listed herein, the Engineer will issue a Work Order detailing the required action. The Contractor shall start the required action within twenty-four (24) hour of receipt of the Work Order and continue the required action until the Project is brought into compliance with the permit Failure to perform the required action as specified, shall subject the Contractor to a $1000/calendar day deduction.

The Contractor shall review and abide by the instructions contained in the permit package. The Contractor shall hold the County harmless for any fines or sanctions caused by the Contractor's actions or inactions regarding compliance with the permit or erosion control provisions of the Contract Documents.

S-35.6 The Contractor shall furnish material, labor and equipment for temporary control measures as shown in the Plans or ordered by the Engineer and shall provide for the acceptable maintenance thereof during the life of the Contract, to effectively prevent water pollution through the use of berms, dikes, dams, sediment basins, fiber mats, netting, gravel, mulches, grasses, slope drains, and other erosion control devices or methods. Surface cover materials shall be anchored to reasonably prevent their entering waters of the State by erosion or rising water levels.

Temporary pollution control measures shall be included for all construction activity associated with the project where such work is necessary for example: borrow pit operations, haul roads, equipment storage, and plant or waste disposal sites.

The temporary pollution control provisions contained herein shall be coordinated with any permanent erosion control features specified elsewhere in the contract to the extent practicable to assure economical, effective, and continuous erosion control throughout the construction and post-construction period.

At the preconstruction conference, or prior to the start of the applicable construction, the Contractor shall submit for acceptance his proposed schedules for accomplishment of

temporary and permanent pollution and erosion control work, as are applicable for clearing and grubbing; grading; construction of bridges and other structures at watercourses; paving; and miscellaneous construction. The Contractor shall also submit for acceptance his proposed method of erosion control on haul roads and at borrow pits and his plans for disposal of waste material. No work shall be started until the applicable erosion control schedules and methods of operation have been accepted by the Engineer.

S-35.7 All temporary and permanent erosion and pollution control measures necessitated by the Contractor's operations outside the greater of either the construction limits or the right of way shall be performed as required by all applicable laws, rules, regulations or permits at the Contractor's own expense. All temporary erosion and pollution control measures necessitated by the Contractor's negligence, carelessness, or failure to properly coordinate the installation of permanent controls as part of the work scheduled within the greater of either the construction limits or the right of way, shall be performed as ordered by the Engineer and in accordance with all applicable laws, rules, regulations or permits, at the Contractor's own expense.

Failure by the Contractor to control erosion, pollution, and siltation as required could result in penalties as provided for in applicable laws, rules, regulations, permits and the provisions herein. The County reserves the right to employ outside assistance or to use its own forces to provide the necessary corrective measures in the event the invoking of the afore referenced penalties do not produce the necessary corrections. All expenses so incurred by the County, including its engineering costs, that are chargeable to the Contractor as its obligation and expense, will be deducted from any monies due or coming due the Contractor. In addition to the expenses incurred by the County for the completion of the afore referenced corrective measures, the County shall also deduct from any monies due or coming due the Contractor non-compliance charges, as provided within this Contract, for that amount of time from when the Contractor was first notified of the need for corrective measures until the satisfactory completion of the corrective measures.

Where the Engineer orders installation of either temporary or additional permanent erosion or pollution control measures, in the absence of any negligence, carelessness, or failure on the Contractor's part to properly schedule and carry out the measures provided for in the Contract, and except for such work which is necessitated by the Contractor's operations outside the greater of either the construction limits or the right of way, the work shall be performed at the Department's expense and payment will be made therefore at appropriate Contract bid prices for like work, or as Extra Work if there is no comparable item of work in the Contract.

S-35.8 In the event of conflict between these requirements and any applicable pollution control laws, rules, regulations, or permits of other Federal and State or local agencies, the more stringent requirements shall apply.

S-35.9 The contractor shall provide an Erosion Control Supervisor for each day that erosion and sediment control devices are in use on the project, in accordance with Contract provisions and as directed by the Engineer.

S-35.10 The Contractor shall, at the pre-construction conference, designate an Erosion Control Supervisor who shall be responsible for and perform the erosion and sediment control management for overall erosion and sediment control management for the Project. The Erosion Control Supervisor shall be responsible for the management of the erosion and sediment control operations of the Project, including those of the Contractor, subcontractors, and suppliers. The primary responsibility of the Erosion Control Supervisor shall be the Erosion and Sediment Control Management of this Project.

S-36 (1718) FURNISHING RIGHT-OF-WAY

The provisions of 1718 are supplemented as follows:

The State of Minnesota, acting through its Commissioner of Transportation is an intended third party beneficiary of the contract with respect to the portion of the work performed on the State's right-of-way.

S-37 IMPLEMENTATION OF CLEAN AIR ACT AND FEDERAL WATER POLLUTION CONTROL ACT

By signing this bid form, the bidder will be deemed to have stipulated as follows:

(1) That any facility to be utilized in the performance of this Contract, unless such Contract is exempt under the Clean Air Act, as amended (42 U.S.C. 1857 et seq., as amended by Pub. L. 91-604), and under the Federal Water Pollution Control Act, as amended (33 U.S.C. 1251 et seq., as amended by Pub. L. 92-500), Executive Order 11738, and regulations in implementation thereof (40 C.F.R. Part 15), is not listed on the U.S. Environmental Protection Agency (EPA) List of Violating Facilities pursuant to 40 C.F.R. 15.20.

(2) That the state transportation department shall be promptly notified prior to Contract award of the receipt by the bidder of any communication from the Director, Office of Federal Activities, EPA, indicating that a facility to be utilized for the Contract is under consideration to be listed on the EPA List of Violating Facilities.

S-38 (1802) TRAINING FOR CONSTRUCTION TRUCK OPERATORS

Operators of construction trucks hauling construction materials such as borrow, aggregate base, asphalt mixtures and concrete paving mixtures are encouraged to become certified as a Level I Construction Truck Operators (CTO).

This one-day session taught in various Mn/DOT Districts features classroom and hands-on educational experiences. The objective of the CTO Training is to make the driver aware of the Federal and State requirements and regulations regarding the construction truck and driver, and the safe driving techniques that will result in the safe operation of the construction truck. Presenters include Minnesota State Patrol, Minnesota Department of Transportation and the Minnesota Safety Center.

This training is co-sponsored by the Minnesota State Patrol, the Minnesota Highway Safety Center, the Minnesota Trucking Association, the Minnesota Asphalt Pavement Association and the Minnesota Department of Transportation.

Additional information about this certification program can be obtained by contacting any of the following:

	PHONE #	FAX #
Minnesota Asphalt Pavement Association: E-mail: info@mnapa.org	651-636-4666	651-636-4790
Minnesota Department of Transportation: E-mail: motorcarrier@state.mn.us Website: http://www.dot.state.mn.us/cvo/index.html	Toll Free: 1-888-472-3389 651-405-6060	651-405-6082
Minnesota Highway Safety Center: E-mail: tjsakry@stcloudstate.edu Website: http://mnsafetycenter.org	Toll Free: 1-888-234-1294 320-255-4732	320-255-3942
Minnesota State Patrol: Website: http://www.dps.state.mn.us/patrol/comveh/index.htm	Toll Free: 1-888-472-3389 651-405-6171	651-405-6082
Minnesota Trucking Association: E-mail: john@mntruck.org Website: http://www.mntruck.org	651-646-7351	651-641-8995

S-39 (1803) PROSECUTION OF WORK

The provisions of MnDOT 1803 are supplemented and/or modified with the following:

S-39.1 The progress schedule shall be revised on a weekly basis and submitted for review and discussion during the weekly construction meetings. The progress schedule shall include the work to be done by utility companies. A Non-compliance charge, will be **assessed at a rate of $250.00 per day per incident**, for each day thereof, which the Engineer determines that the Contractor has not complied.

S-39.2 The Contractor shall comply with local and state ordinances on noise abatement. Any piece of equipment not meeting the requirements shall either be repaired or replaced.

S-39.3 No work will be permitted in hours of darkness and in addition not between the hours of 7:30 P.M. and 7:00 A.M. nor on Sundays or Holidays unless the Engineer gives written permission. The Contractor shall exercise extreme care in operation of their equipment in the sensitive environment of the urban areas. A Non-compliance charge, will be **assessed at a rate of $250.00 per hour**, for each hour thereof, which the Engineer determines that the Contractor has not complied to these time restrictions.

S-39.4 SPECIAL PROJECT ADA REQUIREMENTS

All pedestrian facilities and shared trails on this Project must be constructed according to Public Rights-of-Way Accessibility Guidelines (PROWAG) which can be found at: http://www.access-board.gov/prowac/draft.htm. The appropriate pedestrian ramp details

for each quadrant are included in the Plan. The Engineer may provide additional details to those provided in the Plan that meet the PROWAG guidelines as the need arises and field conditions dictate.

(A) The Contractor must designate a responsible person familiar with PROWAG to assess proposed sidewalk layouts at each site before work begins. Any time work the Contractor is performing concerns pedestrian facilities, the Contractor's representative shall be on site.

(B) Pedestrian facilities must be constructed to meet the following criteria:

(1) Pedestrian Access Routes (PAR) must be constructed to meet the following:

- Minimum 4 feet width.
- A maximum cross slope of 2.0%.
- Vertical discontinuities must be less than 0.25 inches.
- Must provide positive drainage without allowing any ponding.

(2) Landings are part of the PAR and must be constructed to meet the following:

- 4 feet by 4 feet minimum width.
- Maximum slope of 2.0% in all directions.
- Required at all locations where the PAR changes directions.
- Must be connected to the PAR.
- All grade breaks shall be constructed perpendicular to the path of travel.

(3) Ramps are part of the PAR and must be constructed to meet either of the following criteria:

- Longitudinal slopes less than 5% in the direction of travel requires no landing at the top of the ramp (unless the PAR changes direction).
- Longitudinal slopes between 5 - 8.3% in the direction of travel require a landing at the top of the ramp.

(C) If the Contractor constructs any pedestrian or shared-use trail facilities that are not per Plan, do not meet the above requirements, or do not follow the agreed upon resolution, the Contractor shall be responsible for correcting the deficient facilities with no compensation paid for the corrective work. To ensure that the pedestrian facilities are constructed in compliance with PROWAG, the Contractor shall follow the following three steps:

(1) The Contractor shall use the appropriate ramp details in the Plan and identify the removal limits for the sidewalk and curb and gutter. If Contractor determines the removal limits are not adequate to meet PROWAG, the Contractor shall stop work immediately and consult the Engineer to determine the best solution. Once the Engineer and the Contractor reach agreement on how to proceed, the Contractor may finish the removals.

(2) Prior to pouring each curb and gutter segment, the Contractor must verify the zero height curb and curb transitions will be located as shown in the Plans and will provide an adequate detectable edge as shown on Standard Plan Sheet No. 5-297.250 (Sheet 5 of 5). The Contractor shall also verify the proposed curb flow lines will provide positive drainage as well as maintain existing gutter inflows/outflows. The curb and gutter shall be constructed as detailed in the Plan with a defined flowline and no vertical discontinuities. The Contractor shall consult with the Engineer to determine a resolution if any of these conditions cannot be met. Once the Engineer and the Contractor reach agreement on how to proceed, the Contractor may proceed with pouring the curb and gutter.

(3) After the curb has been correctly poured, the Contractor has set the sidewalk forms, and prior to placing the concrete curb ramps/sidewalks, the Contractor shall verify the requirements in **Section S-39.2B** will be achieved. If any of these requirements cannot be met the Contractor shall meet with the Engineer to determine the best solution. Once the Engineer and the Contractor reach agreement on how to proceed, the Contractor may proceed with the curb ramp/sidewalk pour.

(D) It shall be the responsibility of the Contractor, or Contractor's Surveyor if applicable, to layout all proposed work at each intersection in accordance with the Plan and requirements listed in this Special Provision. The Contractor may confer with the Engineer for guidance in laying out the proposed work, but it will be the Contractor's responsibility to ensure the proposed work meets all the requirements of this Special Provision. This layout includes, but is not limited to placement of grade breaks, curb transitions, gutter flow lines, truncated dome placement, crosswalk marking placement, flares, landing limits, and ramp limits. It is important that the Contractor layout this work properly to achieve the construction of a compliant pedestrian facility. This layout work shall be incidental with no extra compensation paid.

(E) The Contractor shall utilize measures and methods when working near existing buildings that will avoid damaging the building's face or structure. The contractor will be responsible for any damage to the building's face or structure, both below and above ground. Any damage resulting from Contractor operations will be repaired at the Contractor's expense to the satisfaction of the Engineer.

(F) The Contractor shall round all joints and edges of the walk with a ¼ inch radius edging tool, contraction joints shall extend to at least 30 percent of walk thickness and shall be approximately 1/8 inch wide as per MnDOT 2521. The Contractor shall also have the option of providing saw cuts to construct the sidewalk joints. This work shall be considered incidental and no extra compensation paid.

(G) In areas where the sidewalk is to be constructed around fixed structures and the grade has been changed, the sidewalk shall be finished around these structures to the satisfaction of the Engineer at no additional cost.

(H) All pedestrian signal systems should be installed as shown in the Plan and must be constructed to meet the following criteria. The Contractor shall verify that the

proposed push button locations will meet all of the following criteria before proceeding with the installation of the pedestrian push button system:

- Pedestrian push buttons shall be oriented with the button facing towards the intersection and the button face placed parallel to the outside edge of the crosswalk.
- Pedestrian push buttons shall be a minimum of 4 feet and a maximum of 10 feet from the back of curb/edge of roadway, but may be placed 1.5 feet to 4 feet from the back of curb/edge of roadway if mounted on a signal pole as indicated in the Plan or as approved by the Engineer.
- Pedestrian push buttons shall be located at the outside crosswalk edge and shall be no more than 5 feet offset from the projected outside edge of the crosswalk/outside edge of detectable warnings.
- Pedestrian push buttons shall be a minimum of 10 feet apart, except in islands and medians, where the minimum separation is 5 feet.
- Each pedestrian push button shall have a landing immediately adjacent to the push button face with minimum dimensions of 4 feet by 4 feet and a maximum slope of 2.0% in all directions. Center the push button on the landing if possible to do so without violating any of the requirements listed in this Special Provision. The landing must be connected to the Pedestrian Access Route.
- A 6-foot wide clear distance between obstructions shall be maintained wherever it is possible to do so for snow removal purposes.
- The push buttons shall be mounted at a height of 42 inches as indicated in the Plan.
- If it is possible to mount a push button on a signal pole and meet all the criteria listed in this Special Provision, then the push button shall be mounted on signal pole and the unused push button station components shall be considered surplus materials and delivered to MnDOT Electrical Services.
- Crosswalks shall be striped in a straight alignment between the outside edges of the detectable warnings with no kinks unless the crosswalks are shown as kinked in the Plan.
- The Contractor shall maintain all working points marked by the surveyor and use the working points to layout push button locations in accordance with the Plans and Special Provisions. The Engineer will verify the proposed push button locations are acceptable prior to construction.

If any of these conditions cannot be met, the Contractor shall consult with the Engineer to determine a resolution. Once the Engineer and the Contractor reach an agreement on how to proceed, the Contractor may proceed. If the Contractor constructs any pedestrian push button systems or pedestrian facilities which do not meet the criteria or the agreed upon resolution, the Contractor will be responsible for correcting the deficiencies with no compensation paid for the corrective work.

To help ensure signal systems are properly constructed the Contractor must adhere to the following practices:

- All push button station bases shall be poured either concurrently with or after the adjacent sidewalk pour.
- Signal pole foundations which are being constructed in or adjacent to sidewalk shall be constructed in accordance with the applicable MnDOT Standard Plate 8120 or 8126. If a push button is proposed to be mounted on a signal pole, the Contractor shall determine the finished grade of the top of proposed sidewalk prior to pouring the signal pole foundation. The signal pole foundation shall not be more than 8 inches above the finish grade of the sidewalk and must still meet the vertical clearance requirements of the applicable MnDOT Standard Plates 8120 or 8126. If this is not possible, the Contractor shall consult with the Engineer to determine the appropriate solution.

S-40 (1803) PROGRESS SCHEDULES CRITICAL PATH METHOD (CPM) SCHEDULE

The provisions of Mn/DOT 1803.1 are deleted and replaced with these Special Provisions.The Work under this Contract shall be planned, reported and accomplished using Critical Path Method (hereinafter referred to as CPM). **All work associated with these requirements is considered incidental for which no direct payment will be made.**

S-40.1 DEFINITIONS

The following definitions used in this Section are intended to supplement or supersede definitions provided with “Primavera Project Planner” (P3), version 3.1 and shall have the following intents and meanings:

(A) Baseline Schedule: The Baseline Schedule is the first accepted As-Planned schedule.

(B) Controlling Item of Work: The non-completed Activity(s) with the earliest start date that resides on the Critical Path(s) of the current Working Schedule.

(C) Critical Activity: An Activity with zero or negative Float.

(D) Critical Path(s): The chain of continuous activities controlling a contractual obligate date. See also Longest Path. See also Milestone.

(E) Date Constraint: A constraint placed on an activity that overrides or impedes logic and/or restricts or distributes float to control a network and/or sub-network of logic. The appropriate Date Constraint shall only be used on contractual obligate date(s).

(F) Float: See Total Float.

(G) Free Float: The amount of days available to an activity without delaying the early start of a successor activity. Free Float is uniquely available to an activity.

(H) Impact Schedule: A schedule prepared to demonstrate the impacts of a change, or a proposed change from the last accepted working schedule. An accepted Impact Schedule becomes the current Working Schedule and is submitted via a Time Impact Analysis.

(I) Longest Path: The Critical Path of the last activity of the schedule. See also Critical Path.

(J) Milestone: A Milestone is a contractual obligated date and shall be designated with an Activity Type of Milestone. Milestones are the only activities allowed a date constraint. The Contractor may use Activity Coding to designate other activities of interest.

(K) Near-Critical Activities: Activities equal or less than 10 days total float.

(L) Preliminary Schedule(s): The schedule(s) submitted as parties work toward Baseline Schedule acceptance.

(M) Revision Schedule: Any accepted schedule that substantially differs from the plan depicted in the accepted Baseline Schedule. An Accepted Revision Schedule becomes the current Working Schedule and is submitted via an Impact Schedule.

(N) Total Float: Number of days by which a part of the Work in the Schedule may be delayed from its Early Dates without necessarily extending a Milestone. See also Float.

(O) Two Week Look-Ahead Schedule: Schedule which spans a forward looking, rolling period of at least fourteen (14) calendar days.

(P) Working Schedule: The current accepted Schedule.

S-40.2 1803.1 All SCHEDULES

A General Requirements

The Department may request, and the Contractor shall provide supporting data to verify the accuracy of or answer questions the Department has about a schedule.

A.1 Acceptance

The Department's acceptance of any schedule does not modify the Contract or constitute endorsement or validation by the Department of the Contractor's means, methods, logic, activity durations, or assumptions in creating the schedule. The Department's acceptance of a schedule is not an "approval." Review by the Department of a portion of a schedule or an incomplete schedule submittal will not indicate acceptance of the entire schedule; the Department will return the accepted schedule to the Contractor as "Accepted-As-Noted" or "No Exceptions Taken."

The responsibility for the validity and accuracy of all accepted schedules is solely the Contractor's. The Department's acceptance of schedules will not relieve the Contractor of its obligation or responsibility to submit complete and accurate information. Failure to include any element of required Work in the Progress Schedule shall not relieve the Contractor from completing all Work necessary to meet the Milestones within the Contract Time. By accepting the schedule, the Department does not guaranty that the project can be performed or completed as scheduled. If the Contractor or the Department discover errors after the Department has accepted a schedule the Contractor shall correct the errors in the next schedule submission. The Department's acceptance of a schedule will not waive any Contract requirements.

A.2 Early Completion

The time between the scheduled completion date of the Work and the completion date associated with the Contract Time is Float. If the Contractor intends to or does complete the Work, or any portion of the Work, earlier than the Milestones, the Project benefits from the resulting increased Float in the Progress Schedule. Contract Time shall be revised by executed no cost Change Order/Supplemental Agreement if the Contractor desires to finish Work earlier than any specified completion dates.

A.3 Non-Compliance

The Contractor's refusal, failure, or neglect to pursue timely acceptance of any schedule shall constitute reasonable evidence that the Contractor is not prosecuting the Work with the diligence that will ensure its completion within the applicable Contract Time and shall constitute sufficient basis for the Engineer to exercise options available in this "Non-Compliance" section. The Engineer will determine which of the following option(s) will best facilitate compliance:

(1) 100 Percent Withholding: The Engineer may withhold an amount **up to 100 percent** of the estimated value of work performed.

(2) Monetary Deduction: The Engineer may assess a non-recoverable Monetary Deduction of **up to $1,000/day f**or every day past an applicable deadline within 1803, "Progress Schedule."

S-40.3 1803.2 BLANK

S-40.4 1803.3 CRITICAL PATH METHOD (CPM) SCHEDULES

A General Requirements

The Work shall be planned, accomplished, and reported using CPM for the Contractor's Progress Schedules.

A.1 Software

The Department uses "Primavera Project Manager (P6)". If the Contractor uses software other than (P6), the Contractor is responsible for any conversion discrepancies.

A.2 Schedule Calculations, Codes, and Settings

The schedule shall not contain any User Defined fields. All Calendars assigned to activities must be a project level Calendar, not Global or Resource Calendar. All Activity Codes shall be project level, not Global or EPS level Activity Codes. No Resources shall be assigned to activities.

A.3 File-Naming Convention

The Contractor shall use a file-naming convention as modeled in Table 1803-3. If the schedule in not accepted, the Contractor shall resubmit under the file name as modeled for the 2nd version, etc. The ####-### indicates a placeholder for the State Project Number.

Table 1803-3
Progress Schedule Filename convention

Schedules	**1st Version**	**2nd Version**	**3rd Version**
1st Baseline Schedule (All Schedules until it is Accepted as Baseline)	####-###-BS-1	####-###-BS -2	####-###-BS -3
1st Update to Progress Schedule	####-###-1BSU-1	####-###-1BSU-2	####-###-1BSU-3
2nd Update to Progress Schedule, etc	####-###-2BSU-1	####-###-2BSU-2	####-###-2BSU-3
1st Revised Schedule	####-###-1RE-1	####-###-1RE-2	####-###-1RE-3
1st Update to Revised Schedule	####-###-1REU-1	####-###-1REU-2	####-###-1REU-3
2nd Revised Schedule, etc	####-###-2RE-1	####-###-2RE-2	####-###-2RE-3
1st Impact Schedule	####-###-1IS-1	####-###-1IS-2	####-###-1RE-3
2nd Impact Schedule, etc	####-###-2IS-1	####-###-2IS-2	####-###-2IS-3

A.4 Float Suppression / Sequestered Float

The Contractor shall not suppress or sequester float. Examples of prohibited float suppression or sequestration include, but are not limited to:

(1) Logic relationships that provide no tangible or sequential value between unrelated activities.

(2) Logic relationships that demand completion of an activity that could otherwise continue beyond a Successor's start or finish dates.

(3) Excessively long durations.

The Contractor shall obtain the Engineer's approval before using lags or leads. The Contractor shall remove any lags or leads and replace with an activity identifying the lag or lead upon the request of the Engineer, regardless of whether the Department allowed the lag or lead in a previous Progress Schedule.

The Contractor shall not be entitled to compensation or a time extension for delays that could have been avoided by revising activity durations or logic used to sequester float.

A.5 Use of Float

The Contractor acknowledges that all float (including Total Float, Free Float, and Sequestered Float) is a shared commodity available to the Project and is not for the exclusive benefit of any party; float is an expiring resource available to accommodate changes in the Work, however originated, or to mitigate the effect of events that may delay performance or completion of all or part of the Work.

It is understood that identified contingencies, as described in 1803.3.D, "Weather and Duration Contingency." become available Float as time elapses and the contingency is not used.

B Required Schedules

B.1 Preliminary Schedule

Acceptance of the first Preliminary Schedule is a condition of Contract Approval and NTP1. A delay in submitting the Preliminary Schedule is a non-excusable delay under 1806.2.C, "Non-Excusable Delays," and the Contractor is not entitled to an extension of the Contract Time.

All schedules submitted before the Department accepts the Baseline Schedule will be considered Preliminary Schedules until the Preliminary Schedule is accepted as the Baseline Schedule in accordance with 1803.3.B.2, "Baseline Schedule"; the Contractor shall continue to improve upon the Preliminary Schedules and show the status of Work actually completed by incorporating actual start and finish dates and by reasonably estimating the remaining duration for each incomplete activity.

At a minimum, the Contractor shall include the following level of detail in the Preliminary Schedules:

(1) First Preliminary Schedule: show all Milestone dates are understood and provide a detailed schedule for a 30-day look-ahead period.
(2) Subsequent Preliminary Schedules: show all Milestone dates are understood and provide a detailed schedule for a 45-day look-ahead period.
(3) Changes to the First Preliminary Schedule in subsequent submissions shall be closely coordinated with the Engineer and are subject to the Engineer's review and acceptance.

B.2 Baseline Schedule

Baseline Schedule acceptance is a condition of NTP2. The Baseline Schedule shall include the entire scope of work and how the Contractor plans to complete all work contracted. The Engineer may review the resource allocations using historical data, Means Productivity Standards, or equivalents to determine if the Schedule is practicable

The Baseline shall indicate:

(1) Actual Dates of Work performed if the Contractor chooses to perform any Work prior to the Baseline being Accepted.

(2) All Contract Time dates, Milestones, and staging restrictions are understood and scheduled to complete within the Contract Time.

(3) Each Activity shall:

(3.1) Possess a unique activity description and include a VOL (Verb, Object and Location) for each description.

(3.2) Be expressed in working days with duration of not more 20, or less than 5 working days, unless otherwise authorized by the Engineer.

(3.3) Have at least one predecessor activity except for the first activity in the schedule.

(3.4) Have at least one successor activity except for the last activity in the schedule.

(4) No more than twenty (20) percent Critical Activities, nor more than thirty (30) percent Near-Critical Activities, unless otherwise authorized by the Engineer.

(5) The minimum following level of detail:

(5.1) Mobilization

(5.2) Work to be performed by the Contractor, Subcontractors, and suppliers.

(5.3) Work to be performed by the Department, other contractors, and third parties such as government agencies and authorities, permitting authorities, or other entities.

(5.4) The project Milestones (start or finish dates specified in the Contract), project highlights (i.e. traffic switches and phases) availability dates specified in the Contract.

(5.5) Submittal, review, and acceptance activities when applicable, including time periods for the Department's acceptance as specified in the Contract.

(5.6) Fabrication, delivery, installation, testing, and similar activities for materials, plants, and equipment.

(5.7) Settlement or surcharge periods.

(5.8) Utility notification and relocation.

(5.9) Installation, erection and removal, and similar activities related to temporary systems or structures such as temporary electrical systems or shoring.

(5.10) Installation, erection and removal, and similar activities related to temporary systems or structures such as temporary electrical systems or shoring.

(5.11) Durations for receipt of permits.

(5.12) Substantial Completion

(5.13) Final Completion

B.3 Update Schedule

The Contractor shall update the last accepted schedule to create the Update Schedule. The Contractor shall update the Progress Schedule by incorporating actual start and finish dates and by reasonably estimating the remaining duration for each incomplete activity. The Contractor shall minimize the number of changes. The Contractor shall describe the reason for changes to the schedule in the Narrative Report submitted with the Update Schedule. If the changes are significant, then the Contractor shall submit the schedule as a "Revised Schedule."

A significant schedule revision is defined as a revision that results in one of the following:

(1) Alters the Critical Path(s) or Near Critical Path(s).

(2) Extends the scheduled Milestone date(s) compared to the dates shown on the Progress Schedule.

(3) Disrupts the integrity or comparative relationship between the Progress Schedule and the Update Schedule. An example of such a revision would be the renaming of activities or changing activity descriptions.

The requirements for the Update Schedule are otherwise the same as the Baseline Schedule.

B.4 Look-Ahead Schedule

The Contactor shall give the Engineer at least 72 hours advance notice before beginning any construction, and at least 24 hours advanced notice before beginning each major construction operation. The Contractor shall inform the Department of the number of hours the Contractor intends to be working each day; and provide 24 hours advance notice of any changes to workday hours, equipment, forces, or sequence of operations.

The Contractor shall submit a detailed Two-Week Look-Ahead Schedule to the Engineer each week until all Work is completed. The Contractor shall prepare the schedule in the bar chart format by hand or by using a computer. This schedule shall span a forward-looking, rolling period of at least 14 calendar days. This schedule is intended to represent the Contractor's best effort to fully communicate the Work planned for the rolling 14-day period and shall not contain extraneous information. The Work activities included in the Two-Week Look-Ahead Schedule shall specifically reference the applicable Activity IDs in the Progress Schedule.

The Two-Week Look-Ahead Schedule shall include, at a minimum, the following level of detail:

(1) Bridges:
- (1.1) Test piling
- (1.2) Test holes
- (1.3) Embankment for each abutment location
- (1.4) Fabrication and delivery of piling
- (1.5) Structural Steel fabrication and delivery, per structure
- (1.6) Pile installation, per bent, per structure
- (1.7) Drilled shaft installation, per pier, per structure
- (1.8) Pile caps, per bent, per structure
- (1.9) Footings, per pier, per structure
- (1.10) Columns, per pier, per structure
- (1.11) Caps, per pier, per structure
- (1.12) End bents, per structure
- (1.13) Beam or girder erection, per structure
- (1.14) Diaphragms
- (1.15) Deck placement, per structure
- (1.16) Parapets, per structure
- (1.17) Erection and removal of falsework and shoring

(2) Roadway:
- (2.1) Traffic switches
- (2.2) Submission of job mix formula for asphalt pavement
- (2.3) Delivery schedule for items such as drainage pipe, guardrail, sign structures and signs, permanent lighting facilities, and permanent traffic signals
- (2.4) Internal access and haul roads (location and duration in-place)

(2.5) Clearing and grubbing by stationing and roadway
(2.6) Excavation
(2.7) Embankment placed for each roadway
(2.8) Drainage – by run with structures for each roadway
(2.9) Retaining walls per location
(2.10) Subgrade for each roadway
(2.11) Base for roadway
(2.12) Curb, barrier wall and sidewalks for each roadway
(2.13) Pavement (asphalt and/or concrete) for each roadway
(2.14) Bridge approach slabs per location
(2.15) Guardrail for each roadway
(2.16) Slope pavement or riprap
(2.17) Roadway lighting for each roadway
(2.18) Signing for each sign structure location and for each roadway
(2.19) Striping for each roadway
(2.20) Traffic signals per location
(2.21) Topsoil, sodding, seeding and mulching for each roadway
(2.22) Landscaping
(2.23) Finishing roadway and final cleanup

B.5 Revised Schedule

The Contractor shall not perform Work substantially different than depicted on the approved Progress Schedule in accordance with 1803.4, "Prosecution Control" and shall seek an Accepted Revised Schedule to become the new Progress Schedule.

The Contractor shall submit a Revised Schedule upon one of the following:

(1) The Contractor desires to substantially deviate from the current Progress Schedule sequence or durations of planned Work. An example would include but not limited to an altered Critical Path.
(2) Department's Request.
  (2.1) Where the Department requires the Contractor to demonstrate how to recover any Milestone date(s) beyond any Contract Dates.
  (2.2) The Department deems a substantial difference between actual sequence, or actual duration, of Work than is depicted in the Progress Schedule.
(3) The issuance of a Contract Revision document that changes the planned sequence of Work or the method and manner of its performance.

The requirement to prepare a Revised Schedule is not a directive by the Department to accelerate the Work but rather a directive for the Contractor to seek the Department's Acceptance of a proposal to revise the accepted Progress Schedule. The requirements of the Revised Schedule are otherwise the same as the Baseline Schedule.

Unless otherwise directed in writing by the Engineer, whenever an Update Schedule indicates negative Total Float greater than 5 percent of the remaining calendar days before a Milestone, but in no case greater than negative 40 working days, the Contractor shall submit, within 7 calendar days, a Revised Schedule. The Contractor shall prepare a Revised Schedule eliminating all negative float associated with Milestone dates. The Contractor shall submit a written Narrative Report describing the Contractor's position regarding the cause for the negative float and the proposed actions by the Contractor to recover. The requirement to prepare a Revised Schedule is not a directive by the Department to accelerate the Work but rather a directive to provide a proposal. If, in the opinion of the Contractor, the delays causing the negative

float are Excusable, then any cure involving acceleration, at a cost to the Department, shall be directed in writing from the Department before any execution of acceleration.

The requirements of the Revised Schedule are otherwise the same as the Baseline Schedule.

B.6 Impact Schedule

The Contractor shall prepare an Impact Schedule:

(1) To quantify the effects of any contemporaneous or prospective impacts to the Progress Schedule
(2) To establish the need for a time extension to a Milestone
(3) At the Department's request. An example of a reason, is the negotiation of a potential Contract Revision document that changes the planned sequence of Work or the method and manner of its performance

The standard for preparation of the Impact Schedule is specified in 1806, "Determination and Extension of Contract Time," concerning the analysis of delays using a prospective time impact analysis. The requirement to prepare an Impact Schedule is not a directive by the Department to accelerate the Work but rather a directive for the Contractor to provide a proposal to demonstrate the effects of impacts to the accepted Progress Schedule. The requirements of the Revised Schedule are otherwise the same as the Baseline Schedule.

C Schedule Submission Requirements

The Contractor shall include the following with the CPM schedule in its schedule submission:

C.1 Narrative Reports

The Contractor shall include a narrative for each schedule submittal to include and discuss:

(1) Baseline, Revised, or Impact Schedules will include:

(1.1) Explanation of the overall plan to complete the Project, including where the Work will begin and how Work and crews will flow through the Project.
(1.2) The working days per week, number of shifts per day, number of hours per shift, the holidays to be observed, and how the schedule accommodates adverse weather days for each month or activity.
(1.3) A statement describing the status of required permits.
(1.4) The quantity and estimated production rates for Critical Activities
(1.5) Activities requiring coordination with the Department and/or 3rd parties (i.e utilities)
(1.6) A statement identifying Constraints and an explanation of the reason for and purpose of each constraint
(1.7) A statement describing the reason for the use of each lag or lead.

(2) Update Schedules will include:

(2.1) A description of the reasons for any changes made to the schedule
(2.2) A statement describing the status of permits.
(2.3) Status of Activities requiring coordination with The Department and/or 3rd parties (i.e Utilities)
(2.4) A description of the status of the scheduled Milestone dates. Elaborate on any differences from the previous submission.

(2.5) A statement explaining why the scheduled Milestone dates are forecast to occur before or after the Contract Milestone date.
(2.6) A description of unusual labor, shift, equipment, or material conditions or restrictions encountered or anticipated since the previous Update Schedule.
(2.7) A statement identifying any new Constraints and an explanation of the reason for and purpose of each constraint.
(2.8) A statement describing the reason for the use any new lag or lead.

C.2 Gantt Chart

C.2.a Gantt Chart Names

The Contractor shall include the following Gantt charts with each schedule submission. Each schedule shall be sorted by Early Start. The Engineer may require the contractor to submit a .pdf version as well as hard copy.

(1) "All Activities Chart". All activities with the Longest Path indicated in red.
(2) " Milestone Chart(s)". Each Milestone's Critical Path.
(3) "Near-Critical Chart". All Near-Critical Activities.
(4) Any chart requested by the Department.

C.2.b Gantt Chart Information

Each Gantt Chart shall contain the following information:

(1) Activity ID
(2) Activity Description,
(3) Early Start
(4) Late Start
(5) Duration (Working Days)
(6) Late Finish
(7) Total Float
(8) Progress Bar
  (8.1) Current Schedule Progress Bar
  (8.2) Baseline Progress Bar (The Engineer may require this to be any past accepted schedule)
(9) Title block
  (9.1) Data date
  (9.2) Run date
  (9.3) Gantt Chart name

C.3 Electronic File

Compressed format (.xer files).

C.4 Submission Timeline

It is the Contractor's responsibility to meet with the Engineer as often as necessary to satisfy the Department's comments with timeframe stated in Table 1803-4.

Table 1803-4 CPM Submission Timelines					
Schedule Type	**Section**	**Data Date**	**Submission Due Date**	**Department Review Length**	**Resubmission Due Date**
First Preliminary	1803.3.B.1	Letting Date, or as directed by the Department.	Condition of Contract Approval	7 Calendar Days after Submitted	Condition of Contract Approval
Subsequent Preliminary	1803.3.B.1	No later than the 15th of the month following the last accepted Preliminary Schedule.	4 Business Days after Data Date	7 Calendar Days after Submitted	7 Calendar Days
Baseline*	1803.3.B.2	*See Note	*See Note	*See Note	*See Note
Update	1803.3.B.3	15th of Every Month	4 Business Days after Data Date	7 Business Days after submitted	3 Business Days
Revised	1803.3.B.4	As needed or directed by the Department.	4 Business Days after Data Date	7 Business Days after submitted	7 Calendar Days
Impact	1803.3.B.5	No earlier than last accepted schedule's data date	7 Business Days after Data Date	7 Business Days after submitted	As directed by Department
*The Preliminary Schedule becomes the Baseline after Baseline criteria is met.					

If the Department does not accept the Update Schedule, the Contractor shall correct the comments and resubmit to the Department within timeframe indicated in Table 1803.2.

D. Weather and Duration Contingency

It is the responsibility of the Contractor to estimate a sufficient amount of contingency to account for normal weather, and for operational contingency. The duration of each activity shall only include the necessary working days to actually complete the work defined by the activity; contingency shall not be built into the durations but shall be accounted for within the project calendars.

Each activity shall be assigned an appropriate calendar. The Project calendars shall indicate planned working and nonworking days. Each calendar, with the exception of the calendar used for tracking calendar days, shall include contingent nonworking days. Contingent nonworking days must be indicated on Monday through Friday only. The Engineer reserves the right to accept or reject the estimated amount of contingency in accordance with "Acceptance of Schedule" section contained herein.

The Schedule shall use a minimum of the following calendars:

(1) Calendar to indicate calendar days (cure time, etc),
(2) Calendar for work that can progress year round, and
(3) Calendar for each major item of Work affected by weather or seasonal limitations. The Contractor shall include as a minimum the number of non-work days indicated in the Table below.

Non-Work Days for Major Items of Work by Month						
Major **Item** of Work	**Jan**	**Feb**	**March**	**April**	**May**	**June**
Removals	NA	NA	NA	2	2	3
Excavation and embankment	NA	NA	NA	3	4	6
Subgrade (granular embankment)	NA	NA	NA	3	4	6
Base	NA	NA	NA	2	2	3
Surfacing	NA	NA	NA	2	2	3
Bridge Substructure	NA	NA	NA	3	4	6
Bridge Superstructure	NA	NA	NA	2	2	3
Utility and culvert work	NA	NA	NA	3	4	6
Lighting and electrical	NA	NA	NA	2	2	3
Turf establishment	NA	NA	NA	3	4	6

Non-Work Days for Major Items of Work by Month						
Major **Item** of Work	**July**	**Aug**	**Sept**	**Oct**	**Nov**	**Dec**
Removals	2	3	2	1	1	5
Excavation and embankment	5	6	5	3	3	1
Subgrade (granular embankment)	5	6	5	5	3	1
Base	2	3	2	1	1	0
Surfacing	2	3	2	1	1	0
Bridge Substructure	5	6	4	3	2	5
Bridge Superstructure	3	3	2	1	1	5
Utility and culvert work	5	6	5	3	3	1
Lighting and electrical	2	3	2	1	1	0
Turf establishment	5	6	4	3	3	1

Contingency will be the numbers of indicated nonworking days compared to a description of the duration (in hours) of the normal working day, as indicated in the narrative, of the work week, e.g., M-F (10 hrs) and Sat (6 hrs) for every calendar.

S-40.5 1803.4 Prosecution Control

The Contractor shall commence and prosecute the work with forces and equipment adequate to complete the Controlling Activity(s) of the Progress Schedule within the planned duration. The Contractor shall prosecute the work continuously and diligently from as many different points and in such parts and sequences as will ensure progress in accordance with the Progress Schedule.

The Contractor shall prosecute the Work substantially in the same sequence as the Progress Schedule. The Department will provide written notice to the Contractor when the Department deems Work is being performed substantially out of sequence; any

Work the Contractor continues to perform out of sequence will be considered unauthorized work in accordance with 1512, “Unacceptable and Unauthorized Work”.

The Contractor shall mitigate the effects of any delay to the extent practicable, and demonstrate recovery through submission of a Revised Schedule, in accordance with 1803.2.B.5, “Revised Schedule,” or 1803.3.B.5, “Revised Schedule,” as appropriate.

While the work is in progress, the Contractor shall notify the Engineer in writing at least 2 business days in advance of any proposed change in equipment, forces, or sequence of operations that may require a change in the Department's engineering or inspection forces.

S-40.6 1803.5 Limitation of Operations

The Contractor shall conduct the Work in a manner and sequence that will ensure the least interference with traffic, with due regard given to the location of detours and to the provisions for handling traffic. The Contractor shall not open up Work to the prejudice or detriment of Work already started. The Engineer may require the Contractor to finish a section on which Work is in progress before starting Work on any additional sections if the opening of that section to traffic is essential for public convenience.

The Contractor shall not perform Work during the hours of darkness without the prior approval of the Engineer. When the Engineer authorizes night work the Contractor shall furnish sufficient artificial lighting to permit proper and safe inspection, as well as to ensure quality workmanship equal to that achievable during daylight hours.

The Contractor shall not perform Work on Sundays or legal holidays unless specifically allowed for in the Contract. The Contractor shall suspend construction operations for a period of 24 hours from approximately 6:00 a.m. on each Sunday or legal holiday until 6:00 a.m. on the following day. The Engineer may allow slight changes in these hours, but the Contractor shall comply with the intent of this policy. The Contractor does not have to obtain the Engineer’s permission to perform minor operations on Sundays and legal holidays that may be necessary to protect the work or to maintain and protect traffic.

S-40.7 1803.6 Temporary Suspensions

A Suspension of Work Ordered by the Engineer

The Engineer will issue all suspension-of-work orders in writing specifying the effective start date and end date of the suspension, the operations to be suspended, and the reasons for the suspension. The Contractor may not resume work until so authorized in writing by the Engineer and shall resume work immediately upon the Engineer’s discretion. The Engineer will order the resumption of Work upon determining that the conditions that caused the suspension no longer exist.

If the Engineer issues a temporary suspension-of-work order because of any action or inaction by the Department, or because of incomplete Work under other contracts, and if the Contractor has not been advised in the Contract that such a suspension may be necessary, the Contractor shall refer to 1402.2.B, “Suspensions of Work Ordered by the Engineer,” regarding compensation and extension of Contract Time.

If the Engineer issues a temporary suspension-of-work order due to the Contractor's fault or negligence, such suspension is a non-excusable delay as specified in 1806.2.C, "Non-Excusable Delays," and is non-compensable.

B Suspension of Work Requested by the Contractor

The Contractor shall send a written request for the temporary suspension of work to the Engineer. The Contractor's request shall include the proposed effective start and end dates, the operations to be suspended, and the reasons for requesting the suspension. The Contractor shall not suspend all or any part of the Work without the Engineer's written authorization. Suspension of the Work for any cause whatsoever shall not relieve the Contractor of the responsibility for maintenance of traffic, except as otherwise provided in 1404, "Maintenance of Traffic," or by written agreement between the Contractor and the Department.

The Engineer will not authorize the Contractor to temporarily suspend operations until the following conditions are met:

(1) The roads that are being used by traffic and any temporary approaches or crossings and intersections with trails, roads, streets, businesses, parking lots, residences, garages, and farms are in such condition that only routine maintenance will be required to adequately accommodate through and local traffic during the anticipated period of suspension.

(2) The Contractor has performed such work as is necessary to protect all completed or partially completed work during the anticipated suspension period.

(3) The Contractor has placed all traffic control devices as specified in 1710, "Traffic Control Devices."

Should the Contractor fail to perform any of this Work before suspension, the Department reserves the right to have the Work performed by others and to deduct the associated costs from any moneys due or becoming due the Contractor.

S-41 (1804) FAILURE TO MAINTAIN SATISFACTORY PROGRESS

The provisions of Mn/DOT 1804 are hereby modified with these Special Provisions.

S-41.1 The last sentence of 1804 is deleted and the following substituted therefore:

If the Contractor fails to adhere to the approved Schedule or fails to take action as ordered to remedy unsatisfactory progress; a notice of default may be issued as provided for in 1808, and/or options under the Non-Compliance section in **Section S-40 (1803) PROGRESS SCHEDULES CPM** of these Special Provisions.

S-42 (1806) DETERMINATION AND EXTENSION OF CONTRACT TIME

Mn/DOT 1806 (Determination and Extension of Contract Time) is hereby deleted and the following substituted therefore:

S-42.1 Construction operations shall be started within eight (8) Calendar Days after the date of Notice of Contract Approval. Construction operations shall not commence prior to Contract Approval.

S-42.2 All work required under this Contract, including maintenance work and Final Clean Up shall be completed on or before June 1, 2015.

S-42.3 In addition to the requirements indicated above, all work required for Stage 1, Stage 1A, Stage 1B, Stage 2, and Stage 3 shall be completed through the first lift of wearing course and open to traffic by October 31, 2013.

S-42.4 Traffic shall be aligned with the Winter Shut Down condition (completion of Stage 3) by October 31, 2013. The paved surface may be the existing undisturbed bituminous surface and shoulders if still remaining, or if it has been disturbed; construction must be completed with the exception of the final wearing course. "Late Season Pavement Markings" will be required if the roadways are opened prior to the final wearing course.

S-42.5 In addition to the requirements indicated above, all work required for the remainder of Stage 4 and Stage 4A shall be completed by July 10, 2014.

S-42.6 In addition to the requirements indicated above, all work required for the remainder of Stage 5 shall be completed by September 18, 2014.

S-42.7 In addition to the requirements indicated above, all work required for Stage 5A shall be completed by October 31, 2014.

S-42.8 In addition to the requirements indicated above, all work required for Stage 5A to open TH 13 westbound loop to TH 35W southbound, TH 35W southbound ramp to TH 13 westbound, and TH 35W northbound loop to TH 13 westbound shall be completed within twenty-six (26) calendar days.

S-42.9 In addition to the requirements indicated above, all work required for Stage 4 to construct CSAH 5 from Williams Drive through the Super America new entrance completed under local traffic shall be completed within seven (7) calendar days.

S-42.10 In addition to the requirements indicated above, all work required for Stage 4A to open TH 13 eastbound ramp to TH 35W southbound, TH 13 eastbound loop to TH 35W northbound, and TH 35W southbound loop to TH 13 eastbound shall be completed within twenty-six (26) calendar days.

S-42.11 In addition to the requirements indicated above, all work required to install the 72" RCP storm sewer under TH 13 (plan sheet 95), to install the 33" RCP storm sewer and 15" PVC sanitary sewers under TH 13 (plan sheet 96), and to install the 48" RCP storm sewer under TH 13 (Structure No. 5107, 5505, and 5019 plan sheet 379) within Traffic Control Stage 1A and Stage 1B shall be completed during a maximum of two (2) weekends between Friday 9:00 p.m. and Monday 5:00 a.m. for the completion of removals, utility construction, grading, aggregate base, and bituminous paving on TH 13. Traffic control will be returned to Stage 1 configuration upon completion of Stage 1A and Stage 1B by Monday 5:00 a.m.

S-42.12 In addition to the requirements indicated above, all work required for Stage 1: CSAH 5 between Williams Drive and CSAH5NB station 109+00 shall be completed within Thirty-five (35) calendar days for the completion of removals, utility construction, grading, aggregate base, concrete curb and gutter. Interim granular surfacing shall only be allowed for a maximum for seven (7) calendar days.

S-42.13 In addition to the requirements indicated above, all work required for eastbound and westbound traffic along Williams Drive may be restricted to one lane each direction west of CSAH 5 for a maximum twenty (20) calendar days during Stage 1 and for fifteen (15) calendar days during Stage 2 for the completion of removals, utility construction,

grading, aggregate base, concrete curb and gutter. Interim granular surfacing shall only be allowed for a maximum for seven (7) calendar days.

S-42.14 In addition to the requirements indicated above, all work required for Stage 1 to construct Northwest frontage road connection to 126th Street (126CON station 11+50 to station 13+80) shall be a maximum of fourteen (14) calendar days under traffic. Interim granular surfacing shall only be allowed for a maximum for twenty-one (21) calendar days.

S-42.15 In addition to the requirements indicated above, all work required for Stage 3 TH 13 WB temporary lane restrictions to one lane for the reconstruction of the TH 13 WB shoulder will not be permitted on TH 13 WB as contained in the plans and **Section S-11.7 (E).** Reconstruction of the TH 13 WB shoulder Stage 3 shall be completed within a maximum of five (5) calendar days for the completion of removals, utility construction, grading, 4" aggregate base, and 6" wearing cource mixture. For location see plan sheet No. 202 to 204.

S-42.16 In addition to the requirements indicated above, all work required for Stage 2 to construct CSAH 5 connection north of 126th Street and 126CON east of CSAH 5 connection to 126th Street shall be completed under traffic within twentyone (21) calendar days. Interim granular surfacing will be allowed for a maximum for twenty-eight (28) calendar days.

S-42.17 In addition to the requirements indicated above, all work required for Utility Plan sheet U17 (Boring Pit) shall be completed while maintaining local access to Northeast Frontage Road abutting properties (FRONTCON1, NEFRONT2, NEFROT3, and DuPont Avenue) within seventeen (17) calendar days for the completion of removals, 16" pressure reducing station -9579, utility construction, utility conections, grading, aggregate base, concrete curb and gutter, and bituminous. The Contractor shall maintain traffic movements at the CSAH 5 intersections with TH13, FRONTCON, and 126CON at all times during seventeen (17) day roadway closure.

S-42.18 Work within temporary easements affecting adjacent private parking lots, as detailed in the Plans, shall be completed within 30 calendar days and the following parameters:

The Contractor shall notify the Engineer at least five (5) working days prior to occupation of affected parking lot stalls. The Contractor shall complete work and vacate occupation of parking stalls within the thirty (30) calendar days specified except as modified below.

The Contractor and Engineer shall agree to the start date prior to commencing work.

(A) PARCEL 19 BURNSVILLE WEST OFFICE/FOX HOLLOW COFFEE HOUSE

12735 County Road 5
Two existing entrances:

1. NB CSAH 5 107+30 RT(closed after completion of Stage 2)
2. SE FRONT 34+77 LT

The outside southbound Coffee House driving aisle between NB CSAH 5 station 107+30 RT and station 108+73 RT shall remain open at all times. The closure of existing right-in/right-out driveway from CSAH 5 at NB CSAH 5 station 107+30 RT (closed after completion of Stage 2) and new curb and gutter including tie in to in-place

curb and gutter shall be done under driving aisle traffic. Access closure (plan sheet 93) shall be completed at conclusion of Stage 2 within ten (10) calendar days for the completion of removals, utility construction, grading, aggregate base, concrete curb and gutter, and bituminous.

2012 Tenant Roll

a. BC Logos 952-881-2302
b. Burnsville Insurance Agency Inc. 952-890-6479
c. Car Zone 952-882-8088
d. Commercial Air Products 952-846-0690
e. Dave Flicek Insurance 952-894-1880
f. DGM Sales 952-894-4274
g. Equity Leadership Group 952-641-6468
h. Farmers Insurance 952-894-1880
i. Hearing Aid Doctor 952-808-9079
j. Insurance Advisors Inc 952-895-1150
k. JPM Sales 952-890-1035
l. Lakeside Agency Inc. 952-894-7462
m. Margaret Guo 952-890-7789
n. North Central Peripherals 952-881-2302
o. Northwoods Data 952-736-3596
p. On the Spot Graphic 952-746-2026
q. Telasoft/Control Anyware 952-707-8581

(B) PARCEL 20 KINDERCARE

Burnsville West KinderCare
Open: 6:00 AM to 6:00 PM, M-F
1800 Greenwood Dr., Burnsville, MN 55337
Local No. 952-890-5116
Two existing entrances:

3. NB CSAH 5 107+30 RT(closed after completion of Stage 2)
4. SE FRONT 34+77 LT

Elementary schools bused to:

Vista View, Edward Neill, Marion and W Savage Elementary Schools as well as Head Start:

- AM bus runs take place between 7:40 AM to 9:00 AM
- Kindergarten (Mid Day) bus runs take place between 11:30 AM and 12:00 PM
- PM bus runs take place between 2:50 PM and 3:50 PM

See Plan sheets 93 KinderCare Parking Lot the South temporary easements: loss of SW stall and temporary encumbrance of **four parking** stalls will be required in the early construction of SE Frontage road: to remove stall from new ROW, Connect to parking lot catch basin, Close entrance from CSAH 5, and Reconnect parking stalls.

Encumbrance time line shall be consecutive calendar days starting on the day of encumbrance. Access closure (plan sheet 93) shall be completed at conclusion of

Stage 2 within ten (10) calendar days for the completion of removals, utility construction, grading, aggregate base, concrete curb and gutter, and bituminous.

1. One stall permanently lost to be replace in northwest TE (NB CSAH 5 107+30 RT) for a maximum of ninety (90) calendar days
2. One stall for a maximum thirty (30) calendar days for C&G reconnection
3. Three stalls for a maximum fifteen (15) calendar days for C&G reconnection

(C) PARCEL GREENWOOD CONDOMINIUM BLDG

Greenwood Apartments
12771 Greenwood & 12761 GREENWOOD DR Burnsville, MN 55337
One Entrance at SEFRONT station 33+89 RT
Access to this entrance shall be maintained at all times.

(D) PARCEL LEAHS APARTMENTS

12721 GREENWOOD DR
Leahs Apartments: Two Entrance at SEFRONT Stations 35+18 RT and 36+43 RT
Management Accessible Space, Inc.
Deb Hellerud
(651) 645-7271
2550 University Avenue, Suite 330N
Saint Paul, MN 55114
STILLWATER MN 55082-9523
Access to one entrance shall be maintained at all times, one entrance may be temporarily closed for a period not exceeding five (5) calendar days.

(E) PARCEL 15 METRO COIN LAUNDRY LLC

1801 Highway 13 W.
Owner contact information
Steve Machacek
651-688-2330 (home) and 651-335-6621 (cell).

Closure of access will occur with elimination of the southeast frontage road cul-de-sac extending along the north boundary of the site which presently provides for two driveways leading to and from the site, with Stage 3 construction of retaining wall No. 5. The Coin Laundry is to retain an existing driveway near the southeast corner of the site near its present location that provides access to and from Greenwood Drive. As part of the project a second driveway is to be installed near the northeast corner which will also provide connection with Greenwood Drive.

Three existing entrances;

Two Entrance at RWALL 5 Stations 11+12 RT and 11+95 RT (SERAMP Stations 62+34 RT and 63+17 RT) (closed after completion two entrance in Stage 2).

One Entrance at SEFRON Station 37+14 LT widened in Stage 2

One new entrance;

SEFRON Station 38+17 LT constructed in Stage 2

Parking loss may occur with an estimated four periphery stalls resulting from change in access and need to reorient traffic flow to go around the building. It is intended for traffic flow and the internal parking arrangement to be reconfigured with the north driveway serving ingress and the south driveway egress in the after situation. Coordination with the owner's contractor will be required. Parking loss for the construction of the two entrances off of SE Frontage Road shall be limited to ten (10) calendar days. Access to two entrances shall be maintained at all times.

(F) PARCEL 13 1575 VISTA VIEW LLC–APARTMENTS

1575 Highway 13 W

Owner contact information
Asfaha Bemnet
651-307-9354

SEFRONT Stage 3 and stage 1A-The utility work will require alternative access/parking for two consecutive days from 9 am to 5 pm; full restoration of the driveway may take up to thirty (30) days. The site improvements in the front of the property, including concrete walkways, stairs, and railing (See Miscellaneous Details Plan Sheet 94) will be replaced as part of the project within fifteen (15) calendar days of removal. The sign will be relocated by the County. The owner is considering using the total acquisition parcel to the west for parking and connection during the construction at their entrance or temporally reconnecting the SE corner of the site to Woodhill Road. Coordination with the owner is required.

(G) PARCEL RESIDENTIAL DRIVEWAY ACCESS SEFRONT

During stage 3 driveway access to garages must be maintained at all times. The Contractor is required to maintain road surfaces so that any necessary local traffic can safely travel within the project. Gravel material needed for this maintenance shall be incidental and no direct compensation will be made. At all times throughout this project, the Contractor shall keep all directly affected property owners informed as to the appropriate access route being provided and maintained for them.

	Station	Property Address	Owner Name
a.	SEFRONT 43+95 RT	1472 WOODHILL RD	Patten Lukas
b.	SEFRONT 44+71 RT	1466 WOODHILL RD	Hill Linda C
c.	SEFRONT 45+44 RT	1460 WOODHILL RD	Citimortgage Inc
d.	SEFRONT 46+08 RT	1454 WOODHILL RD	Valentin Wm E Jr & Lela J
e.	SEFRONT 46+84 RT	1448 WOODHILL RD	Bartness Brianna L
f.	SEFRONT 47+59 RT	1442 WOODHILL RD	Olson Kevin J & Saree J
g.	NO DRIVEWAY	1436 WOODHILL RD	Kalscheuer Mark & Dawn
h.	SEFRONT 49+10 RT	1430 WOODHILL RD	Us Bank Na Tste
i.	NO DRIVEWAY	1424 WOODHILL RD	Larva Wilbert J & Janet R
j.	VALLEYDR 5+89 RT	1418 WOODHILL RD	Hagen Michael

(H) PARCEL COMMERCIAL ACCESS NEFRONT3 STAGE 5A

The Contractor shall maintain the existing traffic movements at the local street intersection of DuPont Avenue to the frontage road at all times, including but not limited to:

a. Aamco Transmissions located at 1308 Highway 13 W, (952) 890-7074
b. House Of Wu located at 1250 Highway 13 W, (952) 890-5920
c. Radco Truck Accessory Pro located at 1300 Highway 13 W, (952) 890-9340

(I) PARCEL COMMERCIAL ACCESS NEFRONT2 PARK CHRYSLER JEEP

Park Chrysler Jeep
1408 W Hwy 13
Owner contact information
Jonathan Dworsky
(888) 865-5490

The Contractor shall maintain the existing traffic movements along DuPont Avenue/North Frontage Road between FRONTCON (Station 16+10) on the west and 126th Street on the north to the Commercial business along the north frontage road at all times except as modified below:

Except, all work required for **Section S-42.11** for the completion of removals, utility construction, grading, aggregate base, concrete curb and gutter shall be completed within five (5) calendar days. Interim granular surfacing shall only be allowed for a maximum for seven (7) calendar days.

Except, all work required for **Section S-42.17** for the completion of removals, utility construction, grading, aggregate base, concrete curb and gutter shall be completed within seventeen (17) calendar days. Interim granular surfacing shall only be allowed for a maximum for seven (7) calendar days.

(J) PARCEL 50- CASSIDY-TRICKER INDUSTRIAL SALES COMMERCIAL ACCESS NEFRONT2

Cassidy-Tricker Industrial Sales,
Tricker Castor and Material Handling, and
Town & Country Trailer Sales
1608 Highway 13 W –
Robert Smith 612-333-0646, and Jerry or Tom Smith 952-882-6338

The Contractor must give the County a minimum of 14 days advance notice of road and/or intersection closures. Seven (7) days prior to closing this section of the road and/or intersection, the Contractor shall place an advance notice sign (G20-X1, 72"x60") in each direction for the section to be closed.

The Contractor shall maintain the existing traffic movements along DuPont Avenue/North Frontage Road between FRONTCON (Station 16+10) on the west and 126th Street on the north to the Commercial business along the north frontage road at all times except as modified below:

Except, all work required for **Section S-42.11** for the completion of removals, utility construction, grading, aggregate base, concrete curb and gutter shall be completed within five (5) calendar days. Interim granular surfacing shall only be allowed for a maximum for seven (7) calendar days.

Except, all work required for **Section S-42.17** for the completion of removals, utility construction, grading, aggregate base, concrete curb and gutter shall be completed within seventeen (17) calendar days. Interim granular surfacing shall only be allowed for a maximum for seven (7) calendar days. The Contractor shall maintain traffic movements at the CSAH 5 intersections with TH13, FRONTCON, and 126CON at all times during **Section S-42.17**.

Including but not limited to:

Use of westerly driveway that provides access to a rear parking/storage lot and access to the back lot can be out of service for twenty (20) calendar days or less for the duration of time construction is ongoing on this property. The driveway, retaining wall, fencing and disrupted area in the back lot shall be repaired within twenty (20) calendar days to equal or better standards as existed in the before situation.

A. The **north frontage road** intersection with westerly driveway may be closed to traffic and traffic detoured in accordance with the traffic control and detour layouts contained in the plans and **Section S-42.11** for no more than five (5) consecutive calendar days for the completion of removals, utility construction, grading, aggregate base, concrete curb and gutter. Interim granular surfacing will only be allowed for a maximum of seven (7) calendar days. No part of any three-day holiday weekend shall be included in the duration of the lane restriction.

B. The **westerly driveway** shall be completed through the wearing course and open to provides access to a rear parking/storage lot within twenty five (25) calendar days for the completion of removals, utility construction, retaining wall, grading, aggregate base, concrete curb and gutter, bituminous pavement, and fencing along the westerly driveway.

Access will be available at all times from the north frontage road to and from the front two parking lot accesses.

(K) PARCEL 43 BURNSVILLE MOTORS-

Burnsville Motors 2000 Hwy 13 - Frontage Road N
Contacts: Jeff Flanagan, Frank Gersich, and Ron Robinson,
Telephone 952-808-0031
Service Hours:
Monday-Friday 7:30am - 6pm
Showfloor Hours:
Monday-Thursday 9am - 8pm
Friday - Saturday 9am - 6pm

Construction of CSAH 5 Stage 3 in the vicinity of the Burnsville Motors shall not proceed until the 126CON, NWFRONT, and DRIVE2 are open to traffic on pavement. The Contractor shall maintain two (2) accesses to Burnsville Motors at all times.

The Burnsville Motors access with existing northwest frontage road may be detoured north along Oliver Avenue to southbound CSAH 5 to the intersection of the northwest frontage road in accordance with traffic control and detoured layouts contained in the plans for no more than ten (10) consecutive calendar days for the completion of removals, utility construction, grading, aggregate base, concrete curb and gutter. Interim granular surfacing will only be allowed for a maximum for five (5) calendar days. No part of any three-day holiday weekend shall be included in the closure.

All work required to complete utility crossings of 126CON, NWFRONT, DRIVE2, and CSAH 5 to maintain, the two (2) accesses to Burnsville Motors shall occur during nighttime closures completed between the hours of 9:00 pm and 6:30 am. The Contractor shall notify the Engineer at least seven (7) working days prior to any nighttime closures.

The main point of access is from the northwest frontage road near the west corner of the parking lot. A second driveway (existing right-in/right-out) exists at the northeast corner of the parking lot from CSAH 5.

The existing northwest frontage road between CSAH 5 and the southwest corner of Burnsville Motors is being eliminated with 126th Street extending around the site. The existing driveway at the southwest corner will remain but will be accessed only from the west with cul-de-sac termination off of the new 126th Street. The northeast driveway will be eliminated.

An additional access point (DRIVE2) is being created near the northwest corner of the existing parking lot to be extended from the new 126th Street to be constructed along the west boundary of Burnsville Motors.

The Contractor shall notify the Engineer at least seven (7) working days prior to occupation of affected parking lot stalls. The Contractor shall complete work and vacate occupation of parking stalls within the calendar days specified. The Contractor and Engineer shall agree to the start date prior to commencing work.

The calendar days are:

a. Work in the SE corner to build Retaining Wall No. 6 and occupy affected parking stalls will be allowed for a maximum of forty-five (45) calendar days for the 20 stalls in the SE corner.

b. One (1) Stall on south side of east lot to remove and tie in C&G; Fourteen (14) calendar days at RWALL6 Stations 10+91 – 11+31 (Curve in Retaining Wall Number 6).

c. Two (2) Stall on north side of east lot to remove and tie in curb and gutter at CSAH 5 access closure; Seven (7) calendar days.

d. Six (6) Stalls on west side north lot at new entrance connection; Seven (7) calendar days.

All work within the Burnsville Motors temporary easements that affects the property owner' and their customers use of parking circulation and stalls, including but not limited to mobilization, removal and salvage items, grading, retaining wall construction, storm sewer, sanitary sewer, and watermain connections, curb and gutter construction, bituminous paving, and pavement markings, shall be completed within the calendar

days stated above. Failure to comply shall result in liquidated damages, as described in these Special Provisions. Turf establishment may be completed outside of these parameters provided they can be completed without occupation of parking lot stalls or interruption to parking lot circulation.

The Contractor will repair any damage resulting to the paved area.

(L) PARCEL 41 ATG PROPERTIES LLC-

2125 Hwy 13 - Frontage Road N Woodruff Center –
Berne's Garage 952- 736-1881
Pat's Checks-R-Us 952-707-0142
Fantasy Gifts 952-882-0313
Jenny K Bridal 952-457-4778

The Contractor shall maintain the two (2) accesses to ATG Properties at all times. All work required to complete utility crossings of 126CON and NWFRONT to maintain the two (2) accesses to ATG Properties shall occur during nighttime closures completed between the hours of 9:00 pm and 6:30 am. The Contractor shall notify the Engineer at least seven (7) working days prior to any nighttime closures. All work along ATG Properties frontage of 126CON Stations 11+00 to 13+00 that affects the property owner' and their customers use of access, parking circulation and stalls, including but not limited to mobilization, removal and salvage items, grading, storm sewer, sanitary sewer, and watermain connections, curb and gutter construction, bituminous paving, and pavement markings, shall be completed without closure of access.

The Contractor shall maintain the existing traffic movements at the westerly access. Restricted width access shall be limited to no more than six (6) consecutive days for the completion of removals, utility construction, grading and aggregate base, concrete curb and gutter. Interim granular surfacing will be allowed for a maximum of ten (10) consecutive calendar days. No part of any three-day holiday weekend shall be included in the closure.

(M) PARCEL 34 PUBLIC STORAGE –

2000 Old County Road 34
Public Storage, Inc.
Public Storage 952-890-0423
Vacuum Center 952-894-6005
State Farm Insurance 952-894-6404
Public Storage, Inc.
701 Western Avenue
Glendale, CA 91201-2349
Contact: Carolynn Ruth,
Real estate Paralegal
818-244-8080 x 1410

Parking loss will occur with three stalls lost at the northeast corner of the site. These stalls are expected to be replaced at the southeast corner of the site adjacent to the Old County Road 34 cul-de-sac. Coordination with the Public Storage contractor will be required. Temporary parking disruption shall occur for a maximum thirty (30) calendar

days. Six (6) parking spaces in the east parking lot adjacent to the retail/office space will be impacted while construction is occurring at this location to construct retaining wall and connect the public storage storm sewer.

(N) PARCEL 32 SUPER AMERICA

12750 County Road 5
952-890-0738

The existing right-in/right-out driveway located at approximately the midpoint of the Super America (CSAH 5 SB station 109+30 LT). This driveway is scheduled to be shifted south to near the southeast corner of the Super America (CSAH 5 SB station 108+38 LT) and converted to a right-in only see **Section S-42.9**. The new entrance at CSAH 5 SB station 108+38 LT shall be opened and provide full access to CSAH 5 constructed in Stage 1 prior to closing CSAH 5 at TH 13 in stage 4 at station 109+00 NB CSAH 5.

The Contractor shall stage construction at Super America such that one of the driveways maintains right turn and left turn traffic movements at all times. The existing driveway or the new driveway to CSAH 5 shall be open to traffic at all time.

(O) PARCEL 31 BURNSVILLE MARKETPLACE

2000 Williams Drive

a. Subway Restaurant 952-882-9285
b. H & R Block 952-895-1160
c. Panaderia La Loma 952-808-6988
d. Taqueria La Hacienda III 952-808-6895
e. Supreme Nails 952-746-8828

Local access to Burnsville Marketplace shall be maintained at all times. The Contractor shall keep all directly affected property owners informed as to the appropriate access route being provided and maintained for them. The Contractor shall maintain existing traffic movements at the driveway of Burnsville Marketplace station 43+58 WB Williams Drive LT at all times except for a maximumof twenty-six (26) calendar days in stage 1.

All work within the temporary easement that affects the property owners' and their tenants' use of parking circulation and stalls, including but not limited to mobilization, removal and salvage items, grading, Retaining Wall No. 8 construction (Stage 1), storm sewer connections, curb and gutter construction, bituminous paving, and pavement markings, shall be completed within 30 calendar days. Failure to comply shall result in liquidated damages, as described in these Special Provisions.

(P) P21 RIVER RIDGE APT. HOMES

12901 County Road 5
Jon Taxdahl, 612-669-2834

Access will be closed at NW corner along Greenwood Drive (SEFRONT Station 30+54 RT) and the right-in/right-out just to the south of that corner (NB CSAH 5 103+42 RT).

The other three access points to the south will be unchanged. A new full access drive will be installed in the NE corner (DRIVE1) with no impacts to the garage in that corner.

Full access to CSAH 5 at NB CSAH 5 103+42 RT or NB CSAH 5 100+91 RT: The Contractor shall maintain full traffic movements at one (1) of the two (2) driveway intersections of CSAH 5 at all times, except for when CSAH 5 intersection with Williams Drive/Greenwood Drive and DRIVE1 are complete.

All work within the temporary easement that affects the property owners' and their tenants' use of parking, circulation and stalls, including but not limited to mobilization, removal and salvage items, grading, retaining wall 9 construction, storm sewer connections, curb and gutter construction, bituminous paving, and pavement markings, shall be completed within fifty-four (54) calendar days. Failure to comply shall result in liquidated damages, as described in these Special Provisions. Total of six (6) parking stalls impacted; four (4) permanently lost and two (2) lost for maximum of 54 calendar days.

S-42.19 1806.1 GENERAL

The Proposal Package will specify the Contract Time. The Contractor shall prosecute the Work continuously and effectively, with the least possible delay, to the end that all Work is completed within the Contract Time.

If the Department issues a Notice to Proceed, the Contract Start Date established in the Notice to Proceed takes precedence over the Contract Start Date specified in the Proposal Package.

The Department will not consider a plea by the Contractor that the Contract Time was not sufficient as a valid reason for an extension of the Contract Time.

If the Department grants an extension of the Contract Time, the extended time for completion will be in full force and effect as though it was originally specified.

The Department will only extend the Contract Time if an excusable delay, as specified in 1806.2.A, "Excusable, Non-Compensable Delays," or 1806.2.B, "Excusable, Compensable Delays," delays Work on the Critical Path as described in items 1, 2, 3, and 4, below.

Mitigation of delay, whether caused by the Department, Contractor, a third-party, or an event, is a shared contract and legal requirement. Mitigation efforts include, but are not limited to, re-sequencing work activities, acceleration, and continuation of work through an otherwise planned shutdown period. The Contractor and Engineer will explore and discuss potential mitigation efforts promptly and agree upon costs or cost-sharing responsibilities prior to the implementation of mitigation efforts.

The Department will not evaluate a request for extension of the Contract Time unless the Contractor notifies the Engineer as specified in 1403, "Extra Work," and provides the required analysis as follows.

The Contractor shall evaluate delays and calculate the appropriate time extension due based on the following:

(1) The Contractor shall base all evaluations of delay and all calculations of the appropriate time extensions due on the schedules submitted to and accepted by

the Department. The Contractor shall not use schedules that did not exist on the project or create schedules after the delay has occurred to demonstrate entitlement to a time extension.

(2) The Contractor shall base evaluations and calculations related to the determination of extensions of time on the Critical Path as established by the schedules submitted to and accepted by the Department. The Contractor is not entitled to a time extension for delays that do not delay the Critical Path.

(3) The evaluations and calculations required to establish entitlement to a time extension will vary depending on the nature and timing of the delay and whether the Contract Time is measured in working days, calendar days, or based on a fixed completion date. It will also vary depending on whether the Contract requires a bar chart or CPM schedule.

(4) The schedules relevant to the evaluation and calculation of time extensions are the most current schedules submitted to and accepted by the Department. For example, if the Department determines that Extra Work is required and the Supplemental Agreement adding this work will be dated June 2, then the determination of the time extension due the Contractor will be based on the last schedule submitted and accepted by the Department prior to June 2 of the same year.

(5) The Contractor's evaluations and calculations to document an appropriate time extension shall be performed as follows:

(5.1) The Contractor shall use the method known in the construction industry as the Time Impact Analysis (TIA) to identify and measure critical delays that have not yet occurred (prospective). The Contractor shall not use this method to evaluate delays that have already occurred (retrospective). In general terms, the Contractor shall perform a TIA as follows:

(5.1.1) Develop a "mini" schedule for the changed work. This schedule is known as a fragnet.

(5.1.2) Identify the current Progress Schedule as described in paragraph (4), above. Record the scheduled completion date in this schedule.

(5.1.3) Insert the fragnet into the current Progress Schedule by properly linking the fragnet with the existing activities in the current Progress Schedule.

(5.1.4) Recalculate the current Progress Schedule with the fragnet inserted and record its scheduled completion date.

(5.1.5) The difference in the calculated scheduled completion dates (or other Milestone dates) between the current Progress Schedule and the Progress Schedule calculated with a properly inserted and properly composed fragnet is the delay attributable to the changed work. The time extension due, if any, will be based on this delay.

(5.2) The Contractor shall use a Contemporaneous Analysis when evaluating delays that have already occurred. The following is based on Recommended Practice No. 29R-03, Forensic Schedule Analysis, MIP 3.4 Observational/ Dynamic/Contemporaneous Split approach. In general terms, the Contractor shall perform a Contemporaneous Analysis as follows:

(5.2.1) Identify the accepted Progress Schedule that is immediately before the start of the delay being evaluated.
(5.2.2) Identify each Progress Schedule in effect during the delay and the Progress Schedule with a data date immediately follows the conclusion of the delay.
(5.2.3) Identify the critical path each day from immediately before the start of the delay to the Progress Schedule immediately following the delay.
(5.2.4) Determine whether the delay falls on the critical path.
(5.2.5) If the delay does not fall on the critical path, then no project delay occurred and no time extension is due.
(5.2.6) If the delay falls on the critical path, then determine the number of days the critical path is delayed. The time extension due, if any, will be based on this delay.

The Engineer will review the Contractor's evaluations and calculations and determine the time extension due, if any. The Engineer will measure extensions to the Contract Time in working days for Working Day Contracts and in calendar days for Completion Date and Calendar Day Contracts.

The Department will relieve the Contractor from associated liquidated damages, as specified in **Section S-43 (1807 FAILURE TO COMPLETE THE WORK ON TIME)** if the Department extends the Contract Time under this section (1806).

S-42.20 1806.2 TYPES OF DELAYS

A Excusable, Non-Compensable Delays

Excusable, non-compensable delays are delays that are not the Contractor's or the Department's fault or responsibility, and that could not have been foreseen by the Contractor. The Department will not compensate the Contractor for excusable, non-compensable delays.

The following are excusable, non-compensable delays:

(1) Delays due to fires, floods, tornadoes, lightning strikes, earthquakes, epidemics, or other cataclysmic phenomena of nature.
(2) Delays due to weather if the Contractor is entitled to a time extension for weather as specified in 1806.3, "Determination of Charges on Working Day Contracts," and 1806.4, "Extension of Contract Time Due to Weather on Calendar Day and Completion Date Contracts."
(3) Extraordinary delays in material deliveries the Contractor or its suppliers cannot foresee or avoid resulting from freight embargoes, government acts, or nationwide material shortages.
(4) Delays due to civil disturbances.
(5) Delays due to acts of the public enemy.
(6) Delays due to labor strikes that are beyond the Contractor's, subcontractor's, or supplier's power to settle and are not caused by improper acts or omissions of the Contractor, subcontractor, or supplier.
(7) Increases in Contract Item quantities that exceed the Proposal Form quantities, but do not cause an increase in the length of the Critical Path.

(8) Delays due to acts of the government or a political subdivision other than the Department.
(9) All other delays not the Contractor's or Department's fault or responsibility and which could not have been foreseen by the Contractor.

B Excusable, Compensable Delays

Excusable, compensable delays are delays that are not the Contractor's fault or responsibility, and are the Department's fault or responsibility, or are determined by judicial proceeding to be the Department's sole responsibility.

The following are excusable, compensable delays:

(1) Delays due to revised Work as specified in 1402.2, "Differing Site Conditions," 1402.3, "Significant Changes to the Character of the Work," and 1402.5, "Extra Work."
(2) Delays due to utility or railroad interference on the Project Site that are not anticipated as a concurrent move or activity by the Contract.
(3) Delays due to an Engineer-ordered suspension as specified in 1402.4, "Suspensions of Work Ordered by the Engineer."
(4) Delays due to the neglect of the Department or its failure to act in a timely manner.

C Non-Excusable Delays

Non-excusable delays are delays that are the Contractor's fault or responsibility. All non-excusable delays are non-compensable.

Non-excusable delays include, but are not limited to:

(1) Delays due to the Contractor's, subcontractor's, or supplier's insolvency or mismanagement.
(2) Delays due to slow delivery of materials from the supplier or fabricator when the material was available in warehouse stock, or when delivery was delayed for reasons of priority, late ordering, financial considerations, or other causes.
(3) Delays due to the Contractor's failure to provide sufficient forces and equipment to maintain satisfactory progress in completing the Controlling Activities.
(4) Delays caused by plant and equipment failure or delays due to the Contractor's failure to provide and maintain the equipment in good mechanical condition or to provide for immediate emergency repairs.
(5) Delays caused by conditions on the project, including traffic conditions that could be foreseen or anticipated before the date of bid opening. Weather delays are addressed in 1806.3, "Determination of Charges on Working Day Contracts," and 1806.4, "Extension of Contract Time Due to Weather on Calendar Day and Completion Date Contracts."

D Concurrent Delays

Concurrent delays are separate delays to Critical Activities occurring at the same time. When a non-excusable delay is concurrent with an excusable delay, the Contractor is not entitled to an extension of Contract Time for the period the non-excusable delay is concurrent with the excusable delay. When a non-compensable delay is concurrent with a compensable delay, the Contractor is entitled to an extension of Contract Time,

but not entitled to compensation for the period the non-compensable delay is concurrent with the compensable delay.

S-43 (1807) FAILURE TO COMPLETE THE WORK ON TIME

The provisions of Mn/DOT 1807 are supplemented as follows:

S-43.1 The Liquidated damages specified in 1807 for failure to complete the Project will begin upon expiration of the date specified in **Section S-42.2** of these Special Provisions. The daily charge will be based on the total original Contract value.

S-43.2 In addition to the liquidated damages specified above, liquidated damages in the amount of **$1,500 per calendar day** will be deducted from any monies due or coming due to the Contractor for their failure to comply with any of the requirements of **Section S-42.3 through Section S-42.7**of these Special Provisions.

S-43.3 Liquidated damages in the amount of **$1,000 per calendar day** will be deducted from any monies due or coming due to the Contractor for their failure to comply with **Section S-42.8 through Section S-42.18 (P)** of these Special Provisions. In addition, the Contractor shall be responsible for actual costs for claims for damages by property owners as a result of failure to complete parking lot work within the specified time parameters in **Section S-42.18.**

S-43.4 Bidders are advised that in addition to the requirements of Mn/DOT 1807, other Sections of these Special Provisions, as shown below, contain requirements for assessment of monetary deductions to this Contract:

Section	Requirement	Rate
1302	Submit the Bid Documentation	$250 per day
1404 & 2563	Correcting traffic control devices	$500 per hour
1404 & 2563	Inspection logs traffic control devices	$250 per hour
1404 & 2563	County corrective action	$1,500 per incident
1404 & 2563	Temporary lane restrictions	$1,000 per hour
1404 & 2563	Negligent in adhering time schedules	$500 per hour
1404 & 2563	Overnight hours	$1,000 per hour
1404 & 2563	Removing posts, etc	$100 per day
1404 & 2563	Traffic control clothing requirements	$500 per incident
1506	Superintendent	$100 per hour
1507	Gopher state one call	$500 per excavation area per day
1706	Safety standards and requirements	$500 per incident
1717	NPDES permit requirements	$1000 per day
1717	Inspection & Maintenance forms S-35.2	$150 per day
1803	Progress schedule	$250 per day per incident
1803	Progress schedule-CPM	$1,000 per day
1803	Hours of work restrictions	$250 per hour
1806	Contract completion date S-42.2	$3,500 per day
1806	Interim completion dates S-42.3 to S-42.7	$1,500 per day
1806	Timelines in S-42.8 to S-42.18 (P)	$1,000 per day
2031	Field office	$100 per day
2123	Street sweeping	$100 per hour per incident
2533	Portable concrete barrier non-compliance	$250 per hour per occurrence
2554	Impact attenuators	$250 per hour

2563	Traffic control supervisor	$250 per hour
2563	Temporary pedestrian access	$100 per hour or $500 per hour
2573	Storm drain inlet protection	$1000 per day
2580	Interim pavement markings	$250 per hour

S-43.5 The liquidated damages as set forth above may apply equally, separately, and may be assessed concurrently.

S-43.6 The requirement of the second paragraph of 1807.2, that liquidated damages will not accrue during the period from November 15 to April 15, inclusively, is deleted for failure to comply with these Special Provisions.

S-44 (1809) EMERGENCY CANCELLATION OF CONTRACT

The last paragraph of Mn/DOT 1809 is hereby corrected to read:

Termination of the Contract or any portion thereof shall not relieve the Contractor of responsibility for the completed work, nor shall it relieve the Contractor's Sureties of their obligation for and concerning any just claims arising out of the work performed.

S-45 (1901) MEASUREMENT OF QUANTITIES

The provisions of Mn/DOT 1901 are supplemented by the following:

S-45.1 Automated Weighing Device

Automated weighing devices shall be interlocked to a ticket printer. The ticket shall contain the date, Project number, pay item number, truck or tractor and trailer identification, truck tare and net mass (weight). The Contractor shall provide the truck driver with a copy of the weigh ticket. The truck driver shall give the ticket to the inspector on the Project.

S-45.2 Uniform Load

In the event that the Contractor requests the use of Uniform Loads, the method of arriving at uniform loading must be approved by the Engineer. Automated weighing devices will be required when belt scales are used in Uniform Load determinations. Periodic Spot checks will be required. Trucks will be stopped and required to be run over a commercial scale.

S-46 (1903) COMPENSATION FOR INCREASED OR DECREASED QUANTITIES

The provisions of 1903 are revised as follows:

S-46.1 The work to be performed is recognized to be construction of a type involving uncertain quantities. All basis of payment provisions of these specifications specifically preclude price adjustments in the event of increased or decreased quantities of Contract items. Any payments provided by bid item shall be valid and shall be accepted by the Contractor as compensation in full for work, regardless of the amount of percentage of increased or decreased quantities. The Owner has the right to delete a bid item in its entirety.

S-47 (1904) EXTRA AND FORCE ACCOUNT WORK

The provisions of Mn/DOT 1904 are supplemented and/or modified with the following:

S-47.1 The Contractor is required to submit force account work itemized statements of costs in accordance with Mn/DOT 1904 to the Engineer on Mn/DOT form TP-21659 (Summary of Daily Force Account). Copies of this form can be obtained from the Engineer.

S-47.2 The following sentence shall be added to the second paragraph of Mn/DOT 1904:

"Under no circumstance will the negotiated unit price for Extra Work which is performed by a subcontractor include a Prime Contractor allowance which exceeds that provided for in 1904(4), Paragraph 3."

S-48 (1910) FUEL ESCALATION CLAUSE

The provisions of Mn/DOT 1910 are hereby deleted and replaced with the attached Fuel Escalation Clause.

S-49 (2011) VIBRATION MONITORING

Vibration producing activities such as blasting, pile driving, vibratory compaction, pavement breaking or operation of heavy construction equipment are required for construction of this Project. The Contractor is advised that structures are located close to the proposed work and that construction activities shall be conducted so as to preclude damage to same (Public Storage, State Farm, All Cars, and Cassidy Industrial). The Contractor shall be responsible for any damage caused by his activities. At least 30 days prior to start of such work, the Contractor shall provide a plan to the Engineer, which shall include, but not be limited to the following: proposed construction method(s): vibration monitoring plans (including the format for reporting the vibration readings), anticipated vibration levels at the closest building(s), condition survey format, and public relations activities. A copy of all reports shall be provided to the Engineer.

The Contractor shall implement this approved plan during construction operations.

S-49.1 VIBRATION CONTROLS

The following vibration control limits are applicable for all construction work, including but not limited to excavating, compacting and hauling activities.

The Contractor is advised that the ground vibration control limits defined herein may restrict his construction practices, and that the Contractor should consider these limitations in preparing the bid.

The Contractor shall employ a qualified vibration specialist to supervise the Contractor's vibration monitoring program. This vibration specialist shall immediately inform the County and the Contractor of any vibration activity that exceeds the limits set below. During all vibration producing activities, the Contractor shall monitor vibration levels.

If the Contractor exceeds 80 percent of the ground vibration limit as specified herein, for any construction activity, he shall cease that activity and submit a report. The report shall give the construction parameter data and include a proposal for corrective action necessary to ensure that the specified limit is not exceeded for future activities. This

report shall be submitted to the Engineer, and his permission must be obtained prior to the continuation, or beginning of any future vibration producing construction activities.

1) DEFINITIONS

The following definitions shall apply to the vibration controls:

(A) Peak Particle Displacement

The peak particle displacement is the maximum movement induced by the vibration. The displacement amplitudes are in units of mils (0.001), zero to peak amplitude.

(B) Peak Particle Velocity

The peak particle velocity is the maximum rate of change with respect to time of the particle displacement. The velocity amplitudes are in units of inches per second (ips), zero to peak amplitude.

(C) Frequency

The frequency of the vibration is the number of oscillations that occur in one second. The frequency units are given in Hertz (Hz) where one Hz equals one cycle per second.

S-49.2 GROUND VIBRATION CONTROL LIMIT

The ground vibration controls are applicable to external locations adjacent to affected buildings or structures. The maximum single component peak particle velocity resulting from construction activity shall not exceed 0.5 inches per second at the building(s) adjacent to the project site.

Higher levels of vibration are typically tolerated for single events or events of short duration. However, vibrations at or above 0.3 inches/sec of peak particle velocity almost always feel severe to the person experiencing them inside a home or business.

The Contractor shall employ a qualified vibration specialist to establish a safe vibration level. This specialist shall also supervise the Contractors vibration-monitoring program. During all vibration producing activities, the Contractor shall monitor vibration levels at the buildings, and shall not exceed the safe level established to preclude damage to the structures.

General Vibration Guidelines:

10.00 in/sec	*Cracks in solid concrete slabs or wall may appear*
4.50 in/sec	*Cracks in masonry may begin to appear*
3.00 in/sec	*Cracking may begin in mortar joints of concrete block foundations.*
2.00 in/sec	*Above this level, there is a possibility of structural damage occurring.*
1.00 in/sec	*New cracks in drywall may appear.*
0.75 in/sec	*Existing cracks in drywall may extend.*
0.50 in/sec	*Cracks in old plaster may appear, existing cracks in plaster may extend.*
0.03 in/sec	*Vibrations are easily detectable by people.*
0.00 in/sec	*No vibrations.*

S-49.3 INSTRUMENTATION

The Contractor shall furnish, maintain and operate at least two vibration monitors during any vibration producing activities that could, in the judgment of the Engineer, produce measurable ground vibrations. The monitors shall be within 200 feet of the vibration producing activity. In the event that the Contractor chooses to have concurrent vibration producing activities at more than one location on the construction site, he shall notify the Engineer in writing at least two weeks prior to the commencement of such activities. The Engineer may require additional vibration monitoring instruments at each location depending on site parameters. No vibration producing activities may be started until the appropriate instrumentation is provided by the Contractor and approved by the Engineer.

All vibration instruments shall be powered with rechargeable batteries and the Contractor shall supply extension geophone and microphone cables so that the instruments can be placed within heated structures if outside temperatures drop below 32 degrees Fahrenheit.

All vibration instruments shall be supplied with current calibration documents and shall be recalibrated on approximately a six month use interval.

The Contractor shall be responsible for instrument maintenance. If the Contractor does not maintain a sufficient number of instruments to monitor the buildings/structures adjacent to the vibration producing activity, the Engineer may direct that all vibration activities cease until a sufficient number are working. Recording tape shall be supplied by the Contractor and at least a two week supply maintained.

The Contractor shall designate an individual in his organization or under Contract to him, who will be responsible for instrument coordination. The Contractor will be responsible for placing the instruments at measuring locations designated by the Engineer, and reading and recording the pertinent vibration event data. The Contractor will report the data to the Engineer at the completion of each vibration event.

The vibration monitor shall be capable of measuring and recording the maximum peak particle velocity in three mutually perpendicular axes (not “vector sum”), and have the following features:

1. Continuous recording capability or self triggering at a minimum level of 0.05 ips.
2. Permanent record of the maximum ppv versus time.
3. Digital display or printout that will yield immediate results in the field of ppv.
4. Sensitivity ranges to resolve ppv from 0.01 to 4.0 ips.

S-49.4 PUBLIC RELATIONS

The Contractor is required to have both letter and personal contact with Owners or Operators of the buildings adjacent to the construction area or near enough to it for ground vibrations from construction operations to affect the personal property, displays or merchandise of these buildings. This contact will be made 2 weeks prior to the beginning of any vibration producing activity. The Contractor will furnish a list of those contacted to the Engineer.

As described elsewhere in these provisions, the ground vibration resulting from construction work will be monitored by the Contractor. The Contractor will measure the

magnitude of each vibration event with at least two vibration instruments, generally located adjacent to the closest or most critical structures.

S-49.5 RECORD KEEPING

Monitoring shall be conducted on a continuous basis at the structure nearest the vibration producing activity (at a minimum), and at any other building(s) designated by the Engineer. Vibration records shall include the time interval (date and time) over which they were recorded.

The Contractor shall furnish daily to the Engineer, the Contractor's Daily Written Log of his structure monitoring measurements.

The Contractor shall maintain a complaint log of all vibration related complaints, contacts and actions, and shall furnish copies to the Engineer on request.

S-49.6 CONSTRUCTION VIBRATIONS

Vibration producing activities (such as removal, pavement breaking or operation of heavy construction equipment, pile driving) is required for construction of the Project. The Contractor is advised that structures are located close to the proposed work and that construction activities shall be conducted so as to preclude damage to these structures and undue annoyance to the occupants. The Contractor shall be responsible for all damage caused by such activities.

S-49.7 PRE-CONSTRUCTION CONDITION SURVEY

Prior to beginning construction, the Contractor shall contact all property Owners within 200 feet of any operation that will require vibration monitoring and obtain permission to perform an existing condition survey of the property. The Pre-Construction Condition Survey should document the existing condition of buildings, foundations and attached items and should include adequate documentation (e.g., photographs, video tape) to show the pre-construction condition of the structures. All documentation shall be maintained by the Contractor for the duration of the Contract. If a claim of damage is made by a property Owner, the Contractor shall supply a copy of the documentation to the Owner for review. The documentation shall become the property of Dakota County upon completion of work on this Contract or upon request from the County for documentation due to a damage claim, whichever is earlier. The Pre-Construction Condition Survey shall be conducted by a person with experience with this type of survey work and this person shall be approved by the Engineer prior to beginning the survey. The cost of the Pre-Construction Condition Survey shall be considered incidental to "2011.601 Vibration Monitoring" and no direction compensation will be made therefore.

The survey will include documentation of interior sub-grade and above grade accessible walls, ceilings, floors, roof and visible exterior as viewed from the grade level. It will detail (by engineering sketches, video tape, photographs, and/or notes) any existing structural, cosmetic, plumbing or electrical damage. The survey will be conducted by a Professional Engineer, registered in the State of Minnesota.

A report shall be issued that will summarize the pre-construction condition of the building(s) and will identify areas of concern, including potential personnel hazards (falling debris) and structural elements that may require support or repair.

Crack displacement monitoring gages will be installed as appropriate across any significant existing cracks to help verify any additional building distress if it should develop. The appropriate location, number, and type of gages will be established by the Contractor and/or the Project Engineer. The gages will be read prior to vibration producing activities, as well as during these activities. Data shall be obtained on a weekly basis for as long as vibration-producing activities are being conducted. A report shall be submitted which summarizes the data. The Engineer shall be alerted if any significant movement is detected by the monitoring gages.

S-49.8 PAYMENT

Payment for performing this work, as described above, shall be made under Item No. “2011.601, Vibration Monitoring”, at the Contract price, Lump Sum, which shall be compensation in full for the necessary work to be provided as specified herein.

S-50 (2021) MOBILIZATION

The provisions of Mn/DOT 2021 are hereby deleted and replaced with the following:

S-50.1 **2021.1** DESCRIPTION

Mobilization shall consist of preparatory work and operations, including, but not limited to, those necessary for the movement of personnel, equipment, supplies and incidentals to the Project site; for the establishment of all Contractor's offices and buildings or other facilities necessary for work on the Project. Mobilization may include bonding, permit, and demobilization costs. When the proposal does not have a lump sum item for Mobilization, all costs incurred by the Contractor for Mobilization shall be incidental to other work.

S-50.2 **2021.5 BASIS OF PAYMENT**

Based on the lump sum Contract price for mobilization, partial payments will be made as follows:

Mobilization Partial Payments		
% of Original Contract Amount Completed[1]	Pay Lesser of the Two	
	% of Mobilization	% of Original Contract Amount
5	50	3
15	75	5
25	100	5
95	100	N/A

[1] The Percent of Original Contract Amount Completed = the amount earned by the Contractor, excluding money earned for mobilization and material on hand, divided by the total value of the original contract (all bid items).

The total sum of all payments shall not exceed the original Contract amount bid for the mobilization item, regardless of the fact that the Contractor may have, for any reason, shut down work on the Project or moved equipment away from the Project and then back again.

Nothing herein shall be construed to limit or preclude partial payments otherwise provided by the Contract.

Item No.	Item	Unit
2021.501	Mobilization	Lump Sum

S-51 (2031) FIELD OFFICE

The Contractor shall furnish, maintain, and remove a field office in accordance with the provisions of Mn/DOT 2031, except as modified as follows:

S-51.1 The sixth and seventh sentences of the first paragraph of Mn/DOT 2031.2 are hereby deleted and replaced with the following:

Two telephone services shall be provided to the field office and shall be touch tone service with "call waiting," voice mail, and shall include touch tone telephone sets; one at each end of the trailer. The Contractor shall pay for the telephone installation, basic monthly phone service charges, all local calls, and all long distance calls within an 50-mile radius, and the removal of the telephone.

S-51.2 The Contractor shall provide either a Qwest Choice DSL Deluxe high speed Internet basic connection or high speed Broadband cable connection for the remote computer and telephone access compatible with the County requirements at time of installation. Contractor shall cover installation and monthly rental costs for modems, routers, filters, maintenance fees and / or ISP charges, as required by the County to operate a remote business environment. In the event such services are not available in the area, then the Contractor shall provide an ISDN phone connection.

S-51.3 The field office shall have operational electric power and telephone service prior to beginning operations on the Project. The electric power may be supplied by temporary usage of a generator of sufficient capacity to operate the lights and climate control units until such time that the required electrical service hook-up can be provided, subject to Engineer's approval.

S-51.4 The potable water supplied shall be both hot and cold.

S-51.5 The provisions of Mn/DOT 2031.3A(10) are hereby modified to say that the minimum floor area of the field office, based on exterior dimensions, shall be not less than 672 square feet.

S-51.6 In addition to the aforementioned modifications, the Contractor shall, at no direct cost to the County, provide and maintain the following items for exclusive use by County personnel for the entire duration of the Contract:

1. Multi-Function Copier/Printer/Scanner/Fax Machine

   Machine shall meet the following requirements, subject to final Approval by Dakota County:

   • Minimum speed: 30 pages per minute
   • Memory: 128 MB or greater
   • Black & White; Color
   • Duplex capable
   • One compatible printer cable
   • One spare toner cartridge (in main Project office at all times)
   • 10/100 Ethernet Connection
   • Paper size capacity: two letter/legal paper trays (one large volume) at portrait and/or landscape orientation, and one 11-inch x 17-inch capable tray
   • Paper capacity: minimum of 500-sheet paper feed tray

   Scanning Function
   • Minimum scanning area: 11.7 inches by 17 inches
   • Minimum resolution: 600 x 1200 dpi
   • 30-page-per-minute duplex automatic document feeder
   • 36-bit color
   • Automatic document size recognition
   • Compatible with network

2. The telephone service provided shall have a minimum of one incoming line and an additional separate dedicated line for the facsimile machine. The telephone sets provided shall have multi-line capabilities at no direct expense to the Owner.
3. One first aid kit including, but not limited to the following: Thermometer, scissors, assorted adhesive bandages, cold compress, ace bandage, gauze wrap, sterile pads, medical tape, tweezers, first aid spray, cotton swabs, cotton balls, alcohol, antiseptic, hydrogen peroxide, aspirin, toothache drops, ammonia inhalants, eye irrigation package, wire splint and a handbook.
4. A lockable, fireproof, non-portable safe with an interior volume of no less than 18 cubic foot and no dimension less than 2 feet. The interior of the safe shall be configured to accommodate storage of a personal computer and printer that will be furnished by the County. The safe shall be securely fastened to the field office. In the event a safe with acceptable size or configuration is not obtainable the Contractor shall provide other means of security acceptable to the Engineer.
5. One large conference table and folding chairs to provide room for 20 individuals to sit around.
6. 18.2 cubic foot refrigerator/freezer.
7. The field office area shall be lighted with a high pressure sodium lighting system to provide adequate safety and security. The lighting system shall be equipped with both a photocell and an external switch which may be locked in place in the on or off position.
8. Provide 5 cellular 4G air cards including 4G Mobile Broadband Plans with minimum 5 GB per month data access.

All equipment and accessories furnished by the Contractor are subject to the approval of the Engineer.

S-51.7 The Contractor shall provide contract maintenance agreements on all electrical accessories, for the life of this Contract. These maintenance agreements shall be incidental to the field office.

The Contractor shall be responsible for repairing or replacing any of the equipment provided under this Contract should damage or loss occur due to theft or vandalism. In the event the facsimile and/or copier equipment be damaged beyond repair or stolen, the Contractor shall provide equivalent replacements within three working days after the loss of the use of the equipment, throughout the life of the Contract. All costs of repair and/or replacement shall be incidental to the Contract Unit Price of the field office.

S-51.8 Equipment provided to Dakota County by the Contractor will be returned to the Contractor within 90 Days after Final Acceptance of the Project, in accordance with Mn/DOT Standard Specification 1516.2.

S-51.9 The field office shall be provided and put into place at the work site prior to the start of construction activities and shall remain in place thereafter for the life of the Contract, including all periods of work suspension.

S-51.10 The field office shall include office areas on both ends of the unit with interior doors to separate the offices from the center meeting area.

S-51.11 The County will deduct $100 from amounts due the Contractor for each calander day that the Contractor fails to furnish a field office meeting the requirements of 2031 and these Special Provisions.

S-52 (2041) ON-THE-JOB-TRAINING PROGRAM

Section II. 6.b of the "Required Contract Provisions-Federal-Aid Contracts" set forth elsewhere in this Proposal is deleted and the following substituted therefore:

As part of the Contractor's equal employment opportunity affirmative action program, training shall be provided as follows:

The Contractor shall provide on-the-job training aimed at developing full journeyman in the type of trade involved. THE NUMBER OF HOURS OF TRAINING TO BE FULFILLED UNDER THIS CONTRACT WILL BE 1900; UTILIZING AT LEAST 2 TRAINEES. In the event the Contractor subcontracts a portion of the Contract work, he/she shall determine how much of the training requirement will be fulfilled by the subcontractor, provided, however, that the Contractor shall retain the primary responsibility for meeting the training requirements imposed by this special provision. This Contractor shall insure that these provisions are made applicable to such subcontract. Where feasible, 25 percent of apprentices or trainees in each occupation shall be in their first year of apprenticeship or training.

The number of trainees shall be distributed among the work classifications on (1) the basis of the Contractor's needs and (2) the availability of journeymen in the various classifications within a reasonable area of recruitment. The contractor must complete all sections of the “On-the-Job Training (OJT) Program Approval Form” The form should be submitted to Mn/DOT’s Office of Civil Rights within ten (10) days of Contract Award and must be received no later than at the time of the pre-construction conference to the Project Engineer. The Form can be found in the attached Equal Employment Opportunity (EEO) Special Provisions on EEO Page 25, and on the Mn/DOT Office of Civil Rights website **- http://www.dot.state.mn.us/civilrights/documents/OJTPre-ConstructionForm.pdf.** The Contractor will be credited for each trainee who is currently enrolled or becomes enrolled in an approved program and will be reimbursed for such trainees as provided hereinafter.

THE COMPLETED FORM **MUST** BE SUBMITTED TO MN/DOT NO LATER THAN AT THE TIME OF THE PRE-CONSTRUCTION CONFERENCE. The Contractor may use one of the following means to submit their completed On-the-Job Training (OJT) Program Approval Form.

a) Mail the form to Mn/DOT Office of Civil Rights 395 John Ireland Blvd. MS 170 Saint Paul, MN 55155
b) The form may be faxed to Christian Guerrero at 651-366-3129.

A contractor who IS approved and accepted into Mn/DOT’s On-the-Job Training (OJT) Alternative Program will submit their training plan within the timeframes specified by that program and therefore will not be required to submit the “On-the-Job Training (OJT) Program Approval Form” within ten (10) days of contract award or at the time of the pre-construction conference. The trainees that have been approved as part of their Contractor – based assignment of positions, must be utilized in accordance with the following provisions set forth here.

Training and upgrading of minorities and women toward journeyman status is a primary objective of these requirements. Accordingly, the Contractor shall make every effort to enroll minority trainees and women (e.g., by conducting systematic and direct recruitment through public and private sources likely to yield minority and women trainees) to the extent such persons are available within a reasonable area of recruitment. The Contractor will be responsible for demonstrating the steps that he/she has taken in pursuance thereof, prior to a determination as to whether the Contractor is in compliance with these requirements. This training commitment is not intended and shall not be used, to discriminate against any applicant for training, whether a member of a minority group or not.

No employees shall be employed as a trainee in any classification in which he/she has successfully (1) completed a training course leading to journeyman status or (2) in which he/she has been employed as a journeyman. The Contractor shall satisfy this requirement by including appropriate questions in the employee application or by other suitable means. Regardless of the method used, the Contractor's records shall document the findings in each case.

The Contractor should also note the following in regards to qualification of candidates to meet the OJT requirements:

1. All apprentices that are officially registered in one of the approved training programs listed below are eligible to be accepted as a OJT candidates as long as they have not worked more hours than the stated number of hours of their crafts apprenticeship program.

2. Movement of approved trainees from project to project or from contractor to contractor is allowed for OJT credit, if that practice is not determined to constitute a practice of “bicycling” and/or result in a disproportionate adverse effect upon minority and women apprentice members or trainees. Bicycling – is the transfer of minority or female employees or trainees from contractor to contractor and/or from project to project for the sole purpose of meeting the Contractor's goals. "Bicycling" shall be a violation of this Special Provision and the regulations in 41 CFR Part 60-4.

The minimum length and type of training for each classification will be as established on the “On-the-Job Training (OJT) Program Approval Form” submitted by the Contractor and approved by the State Transportation Department and the Federal Highway Administration. The State Transportation Department and the Federal Highway Administration will approve a program if it is reasonably calculated to meet the equal employment opportunity obligations of the Contractor and will qualify the average trainee for journeyman status in the classification concerned by the end of the training period. Furthermore, apprenticeship programs registered with the U.S. Department of Labor, Bureau of Apprenticeship and Training, or with a State apprenticeship agency recognized by the Bureau and training programs approved but not necessarily sponsored by the U.S. Department of Labor, Manpower Administration, Bureau of Apprenticeship and Training shall also be considered acceptable provided it is being administered in a manner consistent with the equal employment obligations of Federal-aid highway construction contracts.

Examples of approved training programs are not limited to but include the following:

- MN Construction Laborers Apprenticeship Program
- Local 49 Operating Engineers Apprenticeship Training Program
- North Central States Regional Council of Carpenters Training Program
- Iron Workers Apprenticeship Program
- MN Teamsters Construction Apprenticeship Training Program
- MN Cement Masons Apprenticeship Training Program
- Painters and Allied Trades District Council 82 Finishing Trades Apprenticeship Program
- MN Electricians Union Apprenticeship Programs.

Any training program proposed by a contractor to meet the obligations set forth in this Provision which is not included in the list of approved programs cited above will be subject to approval by Mn/DOT's Office of Civil Rights, and must include a minimum of 500 training hours but shall not to exceed 2,000 hours. If a contractor proposes to utilize an approved apprenticeship program from one of the examples cited above, the contractor must provide the Apprenticeship Form or Indenture Number when submitting for approval. The Contractor shall also furnish to Mn/DOT's Office of Civil Rights a list of currently employed apprentices in each trade they wish to utilize. The list must include: Name, Gender, Ethnicity and current year of apprenticeship. The number of hours an approved trainee who is enrolled in a certified apprenticeship program can retain eligibility for trainee status will be consistent with the amount of hours that have been established as the minimum requirement necessary to be completed prior to achieving journey level status.

Approval or acceptance of a training program shall be obtained from Mn/DOT's Office of Civil Rights prior to any work by the classification covered by the program. It is the intention of these provisions that training is to be provided in the construction crafts rather than clerk-typists or secretarial-type positions. Training is permissible in lower level management positions such as office engineers, estimators, timekeepers, etc., where the training is oriented toward construction applications. Any and all training provided by a contractor to meet the obligations in this Provision must provide a significant and meaningful training experience for the trainee candidate. Some offsite training is permissible as long as the training is an integral part of an approved training program and does not comprise a significant part of the overall training.

Except as noted below, the Contractor will be reimbursed at the appropriate Contract price per hour for each employee that is trained in accordance with, and for at least the minimum period specified in the approved training program. As approved by the Engineer, reimbursement will be made for training persons in excess of the number specified herein. This reimbursement will be made even though the Contractor receives additional training program funds from other sources, provided such other source does not specifically prohibit the Contractor from receiving other reimbursement. Reimbursement for offsite training indicated above may only be made to the Contractor where he/she does one or more of the following and the trainees are concurrently employed on a Federal-aid project; (1) contributes to the cost of the training, (2) provides the instruction to the trainee or (3) pays the trainee's wages during the offsite training period.

No payment shall be made to the Contractor if either the failure to provide the required training, or the failure to hire the trainee as a journeyman, is caused by the Contractor and evidences a lack of good faith on the part of the Contractor in meeting the requirements of this Special Provision. It is normally expected that a trainee will begin his/her training on the Project as soon as feasible after start of work utilizing the skill involved, and remain on the Project as long as training opportunities exist in his/her work classification or until he/she has completed his/her training program. It is not required that all trainees be on board for the entire length of the Contract. If a contractor lays off or terminates a trainee for any reason, that contractor must complete and submit the "Trainee Termination Form" which can be found in the EEO Special Provisions. A Contractor will have fulfilled his/her responsibilities under this special provision if he/she has provided a significant, meaningful training experience and/or acceptable training to the number of trainees specified. The number trained shall be determined on the basis of the total number enrolled on the Contract for a significant period.

Trainees will be paid at least 60 percent of the appropriate minimum journeyman's rate specified in the Contract for the first half of the training period, 75 percent for the third quarter of the training period, and 90 percent for the last quarter of the training period, unless apprentices or trainees in an approved existing program are enrolled as trainees on this Project. In that case, the appropriate rates approved by the Departments of Labor or Transportation in connection with the existing program shall apply to all trainees being trained for the same classification who are covered by this Special Provision.

The Contractor shall furnish the trainee a copy of the program he/she will follow in providing the training. The Contractor shall provide each trainee with a certification showing the type and length of training satisfactorily completed.

The Contractor shall provide for the maintenance of records and furnish periodic reports documenting his/her performance under these Special Provisions. Any trainee that has been approved by the Office of Civil Rights and employed by the Contractor, and subsequently terminated must be documented on the "On-the-Job Training Trainee Termination Form" located in the EEO Special Provisions of this Contract on EEO Page 26. All required forms needed to satisfy the requirements of these Special Provisions can be found in the attached EEO Special Provisions, pages 23-26 or on the Mn/DOT Office of Civil Rights website - http://www.dot.state.mn.us/civilrights/.

Compliance with the foregoing requirements for timely filing of the reports may be a condition precedent to the processing and payment of partial and final payments. If it is determined that a contractor has not acted in "Good Faith" with efforts to comply with this provision or engages in willful violations, a contractor may be subject to sanctions including but not limited to: monetary deductions associated with the trainee line item in the contract, withholding of partial and/or final payment.

The trainee period will be measured by time in hours as specified hereinbefore, and payment will be made under Item 2041.610 (Trainees). This item will be shown on the Bid Schedule at the fixed rate amount of $1.00 per hour.

With appropriate documentation, an additional $4.00 per hour (maximum total of $5.00 per hour) will be paid to the Contractor for hours worked on the project by employees

recruited from Mn/DOT's OJT Supportive Services Programs. In conjunction with any employees recruited from Mn/DOT's OJT Supportive Services Programs, an additional $5.00 per hour (maximum total of $10.00 per hour) will be paid to the Contractor for hours worked on the project by employees recruited from Mn/DOT's OJT Supportive Services Programs, if the Contractor provides a mentor for the trainee(s) while the trainee(s) is working on the project. Approval for payments to be made under Item 2041.610 (Trainees) for any amount which exceeds the fixed rate amount of $1.00 must be received in writing from the Mn/DOT Office of Civil Rights. The ratio of trainee to mentor may not exceed 3 to 1. A listing of Mn/DOT's OJT Supportive Services Programs can be found on the Office of Civil Rights website cited above.

S-53 (2051) MAINTENANCE AND RESTORATION OF HAUL ROADS

The provisions of Mn/DOT 2051 are supplemented by the following:

S-53.1 In addition to the amount the Contractor bids for Item 2051.501 (Maintenance and Restoration of Haul Roads), the County agrees to reimburse the Contractor at the predetermined unit prices set forth below for materials ordered by the Engineer. All materials ordered by the Engineer for the Maintenance and Restoration of haul roads will be measured as set forth in the applicable section of the Standard Specifications.

S-53.2 Each of the following materials measured as provided above, will be paid for at the following predetermined unit prices:

2118.501	Aggregate Surfacing, Class 1	$6.00/ton
2130.501	Water	$10.00/1000(M)gal
2131.502	Calcium Chloride Solution	$0.50/gal.
2211.501	Aggregate Base, Class 5	$6.00/ton
2360.501	Type SP 12.5 Wearing Course Mixture (4, B)	$24.95/ton

Crushing will not be required in the production of Class 1 material.

The above prices will be considered to be compensation in full for furnishing and providing the materials complete in place, including, but not limited to, royalty, waste, equipment rental, labor, overhead, profit, and incidentals. When materials other than those listed above are ordered by the Engineer, they will be paid for as extra work in accordance with Mn/DOT 1403, with **the Contractor and the Department sharing equally in the costs**. Separate payment will not be made for costs of blading and reshaping necessary for the maintenance and restoration of haul roads. The cost of such work shall be incidental, and at the Contractor's expense.

The above shall be performed to restore visible damage.

S-54 (2101) CLEARING AND GRUBBING

Clearing and grubbing shall be performed in accordance with the provisions of 2101, except as modified below:

S-54.1 The Contractor will limb all trees, cut them into 16 foot lengths and place them on the abutting property outside the construction limits whenever so requested by the property owner.

S-54.2 All material obtained from clearing and grubbing operations shall be disposed of outside the Right of Way at locations selected by the Contractor in accordance with the provisions of 2104.3C3.

S-54.3 Burning or burying timber, stumps, roots or other debris will not be permitted.

S-54.4 Property owners will have the right to remove trees from the right-of-way being acquired from their property after the award of the contract. Trees not removed prior to the Contractor working on that individual property become the property of the Contractor.

S-54.5 No tree shall be cut until the Engineer has marked it for removal. The Contractor shall remove only those trees necessary to be removed to construct the Project. All other trees shall be protected from damage during construction. Trees shall be felled so that they fall away from trees being saved. In the event that a tree being saved is damaged or scraped, the damaged area of the tree shall be painted with an approved pruning paint within one (1) hour of the damage. The Contractor shall have on hand at least one (1) full gallon of pruning paint at all times for this purpose. Any pruning paint is considered incidental.

S-54.6 Bidders are hereby advised that, for public relation reasons as well as others, not all clearing and grubbing limits and trees to be removed will be identified and marked by the Engineer throughout the project limits at the beginning of construction activities. Clearing and grubbing operations shall be staged with grading activities on the project. Multiple mobilizations and demobilizations will be required to complete all clearing and grubbing required on the project. The unit price bid shall include as many mobilizations and demobilizations as necessary to clear and grub the project limits as staked by the Engineer.

S-54.7 The Contractor shall take special care to preserve existing trees and shrubs whenever possible. This may include careful grading operations, slight adjustments of slopes, and placing snow fence at tree drip lines. Snow fence if necessary is incidental.

S-55 (2102) PAVEMENT MARKING REMOVAL

The provisions of Mn/DOT 2102 are modified and/or supplemented with the following:

S-55.1 In addition to the requirements above, the Contractor is responsible for determining what work areas have lead concentration above OSHA's Permissible Exposure Limit. That information is to be provided to the Project Engineer and Mn/DOT's Inspectors.

(A) Site access

To ensure that no one is accidentally exposed to lead, people are not permitted into areas of high lead concentration without protection. Signs are used to indicate where unprotected people must not go. The signs shall say:

Warning. Lead Work Area. Poison. No Smoking or Eating.

(B) Protective Clothing

The Contractor must provide protective clothing for Mn/DOT inspectors in any area with lead exposure above 30 µg/m3 or where the lead concentration is unknown. The clothing can be disposable or reusable. It must include coveralls or equivalent, shoe covers, and head covers. The Contractor is responsible for laundering the clothing and for providing clean clothing at least weekly or for daily disposal of the clothing. If the contaminated clothing can be reused, the Contractor is responsible for storing it.

(C) Wash facilities

The Contractor must provide soap, water, and towels to enable Mn/DOT's inspectors to wash at the site. If showers are provided for the Contractor's employees, they must be available for Mn/DOT's inspectors, also.

The Contractor must provide a means to remove surface contamination from the inspector's clothing. That may be a HEPA vacuum, a downdraft booth (with the exhaust captured and cleaned), or other effective means that do not increase the concentration of airborne lead.

(D) Inspection Delay

Mn/DOT's inspectors will not enter a blasting containment area until at least fifteen minutes after blasting and other lead dust-producing activities have stopped, to permit the dust to settle. There will be no extra payment or penalty against Mn/DOT for this delay.

S-55.2 Pavement marking removal on existing bituminous pavement not scheduled for an overlay and/or on the final bituminous wearing course shall be sandblasted, not milled.

S-56 (2103) BUILDING REMOVALS

S-56.1 The building and basement removal shall be performed in accordance with the provisions of Mn/DOT 2103, except as modified and supplemented below. All asbestos and regulated waste/material assessments and removal shall be in accordance with all applicable rules/regulations and Mn/DOT Policy. Buildings shall be removed in **February 1st, 2013 through March 29th, 2013**. See **Section S-24 (1701) LAWS TO BE OBSERVED (BUILDING REMOVALS)** of these Special Provisions for additional information.

S-56.2 Appointments for viewing the building may be arranged by contacting Mr. Gary Peppard, Dakota County Right of Way Specialist, at (952) 891-7126 or gary.peppard@co.dakota.mn.us

S-56.3 The buildings to be removed as shown in the Plans is located at:

1. 12721 COUNTY RD 5 Famous Dave's_____
2. 1820 HWY13 W Sinclair / Brooks Automotive_____**(A)**
3. 12601 COUNTY RD 5 Advantage Auto Glass_____**(B)**
4. 2001 FRONTAGE RD N Valvoline Auto Oil Change (Hwy 13)_____**(C)**
5. 1925 FRONTAGE RD N Little Saigon_____**(D)**
6. 1901 FRONTAGE RD N Taco Bell (Hwy 13 & CSAH 5)_____**(E)**

7. 1717 HWY13 W Flooring Expo **(F)**

The description of the building shown in the Plans is not intended to indicate in any manner the suitability of any of the buildings for any particular purpose. Further information regarding buildings to be removed under this Contract may be found elsewhere herein.

S-56.4 Bidders are hereby advised that a City permit for the removal or demolition of the structure may need to be obtained prior to any removal or demolition work. The Contractor shall inform themselves of the necessary permitting and acquire the necessary permits for this work. All costs of securing the necessary permits, complying with the provisions thereof, and providing any bonds required will be considered to be incidental to the building removal items and no direct compensation will be made.

S-56.5 Bidders are hereby further advised that condition surveys for the existence of asbestos have not been performed on the buildings to be removed. It shall be the Contractor's responsibility to have condition surveys conducted for the existence of asbestos. The surveys are to be performed by a Certified Asbestos Abatement consultant and a written report of findings is to be delivered to the Engineer prior to the commencement of the removal of any building from the project. The costs for the completed asbestos survey shall be considered incidental to the building removal pay items.

In the event asbestos is discovered in any building to be removed all work necessary for proper asbestos abatement shall be performed by a certified asbestos abatement contract. All work associated with actual asbestos removal will be considered Extra Work and will be compensated as such in accordance with the provisions of Mn/DOT 1904.

S-56.6 All asbestos and/or regulated waste shall be disposed of in accordance with Mn/DOT's manual "Asbestos and Regulated Waste Manual for Structure Demolition or Relocations for Construction Projects" available on the following website: http://www.dot.state.mn.us/environment/regulated-materials/index.html.

Only Mn/DOT approved contractors and disposal end sites listed in this manual as pre-approved for asbestos and/or regulated waste shall be used on this Project (for a list of Mn/DOT approved contractors call 651-366-3630).

S-56.7 All hazardous and regulated waste/s shall be removed prior to any sale, demolition or moving of houses. All material shall be removed, identified, and disposed of in accordance with **Section 1701 (LAWS TO BE OBSERVED)** of these Special Provisions. The contractor will not receive permission to begin the removals, with the exception of material needed for hazardous and regulated waste assessment or testing, until the Engineer has copies of all required notices.

S-56.8 Building removal shall consist of removing from the Right of Way the buildings listed in the Plans under each separate parcel number and shall be construed to include the miscellaneous removals at the location(s) indicated in the Plans. Miscellaneous removal and disposal operations shall be performed consistent with the applicable provisions of Mn/DOT 2104.

S-56.9 The Contractor will not be allowed to proceed with the demolition or moving of buildings until the Engineer has received copies of all required notifications as indicated in **Section S-24 (1701) LAWS TO BE OBSERVED** of these Special Provisions.

S-56.10 No. 4 2001 FRONTAGE RD N Valvoline Auto Oil Change (Hwy 13) (C) has three (3) aboveground storage tanks one (1) 1,000 Gallon capacity tank with stored substance used oil and two (2) 500 Gallon capacity tanks with stored substance new oil. The Contractor shall completely remove all all petroleum storage tanks in accordance with **Section S-58 (2104) Remove Tank.**

S-56.11 Payment for the Building Removal under Item No. 2103.501 by the lump sum shall include the removal of all site improvements excluding those which are specified as separate removal pay items. Lump sum removal items shall include, but not be limited to the houses, garages, exterior lights, decks, retaining walls, fences, sidewalks, patios, fireplaces, concrete floor slabs and driveways, except if they are included as pay items and the removal specifically called out and tabulated.

S-56.12 All costsof **Building Removal C** under Item No. 2103.501 by the lump sum of No. 4 2001 FRONTAGE RD N Valvoline Auto Oil Change (Hwy 13) of the three (3) aboveground storage tanks in accordance with **Section S-58 (2104) Remove Tank** shall be provided by the Contractor as an incidental expense to Item No. 2103.501 Building Removal **C** items of the Contract.

S-56.13 FAILURE TO COMPLY WITH NOTIFICATION PROVISIONS WILL BE DEEMED A MATERIAL BREECH OF CONTRACT. IN THE EVENT THAT A REGULATORY AGENCY IMPOSES MONETARY SANCTIONS ON THE COUNTY THAT ARE BASED, IN WHOLE OR IN PART, UPON THE ACTS OR OMISSIONS OF THE CONTRACTOR, THE CONTRACTOR AGREES TO INDEMNIFY THE COUNTY AND TO HOLD THE COUNTY HARMLESS FOR SAME, EXCEPT TO THE EXTENT THAT ANY SANCTIONS WERE CAUSED BY COUNTY'S OWN NEGLIGENCE

S-57 (2103) CONSTRUCTION WASTE MANAGEMENT AND DEBRIS RECYCLING REQUIREMENTS

The Contractor is required to provide a construction waste management plan which shall stipulate the process to be used for waste reduction and recycling of construction demolition debris. The requirements of MnDOT 2103 and **Section S-56-(2103) BUILDING REMOVAL** of these Special Provisions are supplemented with the following:

S-57.1 After Contract Approval, but prior to commencement of the Work, the Contractor shall schedule and conduct a meeting with the Engineer to discuss the proposed Construction Waste Management plan (CWM). This topic may be part of the Pre-Construction Meeting or may be a separate meeting.

S-57.2 The Contractor shall develop a Construction Waste Management Plan (CWM) for the work prior to any demolition and waste removal commencing. Submit the CWM plan to the Engineer. The Engineer will review and accept the plan. The CWM plan shall contain the following information:

(A) The Contractor shall designate a person who shall be responsible for overseeing and documenting results of the CWM plan. Provide a contact name and telephone number to the Engineer.

(B) The Contractor shall identify the construction debris waste management company(s) who will be used to recycle each material as required in **Section S-57.3.**

(C) The plan shall stipulate if the construction debris will be sorted in separate debris boxes onsite or disposed of in one box and sorted and recycled at an off-site sorting facility. Provide the name address and telephone number of the offsite sorting facility.

(D) The plan shall stipulate what materials the Contractor intends to recycle and where each type of material shall be disposed of as specified in **Section S-573.**

(E) A copy of the CWM plan shall remain onsite at all times until the Building Removal and demolition is complete.

(F) MnDOT shall receive (2) two copies of the CWM plan, with an enclosed electronic copy, which shall be provided to the Project Engineer.

S-57.3 The Contractor shall recycle/salvage/reuse the following materials

1. Bituminous pavement
2. Concrete pavement
3. Concrete block
4. Brick
5. Wood
6. Steel, copper, aluminum and all other ferrous and non-ferrous metals.

The Contractor may elect to salvage materials for reuse. Provide a list of materials removed from the Project site, the intended reuse and their approximate weights on the Tracking Form. See Section 55.5.

The materials listed herein shall be recycled, salvaged or reused and not disposed of in a demolition landfill.

The Contractor may use only recyclers approved by MnDOT. Reference Approved Vendors list at : http://www.dot.state.mn.us/environment/regulatedmaterials/pdf/waste-contractors.pdf

S-57.4 The Contractor may elect to provide separate debris boxes onsite or provide one debris box that will be taken to a sorting facility offsite. If the Contractor elects to provide separate debris boxes onsite, all boxes must be clearly labeled with the material each box is designated to hold. All boxes shall be monitored daily to avoid illegal dumping by the public.

S-57.5 The Contractor shall provide documentation of the movement and disposal of demolition debris, including copies of all manifest, weight tickets, receipts and invoices. The project shall be clearly identified on all documentation. Documentation shall be submitted regardless of the disposal method used to determine the percentage of materials recycled.

S-58 (2104) REMOVE TANK

MnDOT 2104.3 B6 is hereby deleted and replaced with the following:

B6 TIMBER STRUCTURES AND PETROLEUM STORAGE TANKS

The Contractor shall completely remove all timber structures and all petroleum storage tanks in accordance with applicable regulations. Some of the following requirements may be more stringent than current Minnesota Pollution Control Agency (MPCA) requirements. Any questions regarding the requirements shall be directed to John Sass 952-891-7130 No later than 30 days following tank removal, one (1) copy of the tank removal report shall be provided to the Engineer and one (1) copy to John Sass Dakota County Transportation Department 14955 Galaxie Avenue, 3rd Floor Apple Valley, MN 55124.

B6a All Petroleum Storage Tanks

Contractors removing underground petroleum storage tanks must have MPCA certification. It is recommended that Contractors removing aboveground petroleum storage tanks also have MPCA certification. The Contractor shall:

1. Obtain all required permits and complete all required notifications,
2. Provide a copy of the completed "Notification/Change in Status for Underground Storage Tanks" form to the Engineer at the same time it is sent to the MPCA, no later than 10 days prior to removal of the petroleum storage tank,
3. Have a MPCA Certified Supervisor on site during underground petroleum storage tank removal. It is recommended that a MPCA Certified Supervisor be on site during aboveground petroleum storage tank removal,
4. Drain all connecting pipes,
5. Remove fuel and fuel/water mixture from the tank to the extent practicable,
6. Remove all explosive vapors from the tank,
7. Remove the tank with the tank bottom/sludge left inside the tank. The tank bottom/sludge shall not be removed from the tank on site. The tank shall not be cut up on site. If the tank is too fragile/corroded/broken to be removed intact, and must be removed in pieces and the tank bottom/sludge removed on site, the Contractor shall immediately notify the Engineer. The Contractor shall be prepared to stop all tank removal work for a minimum of 48 hours to allow the Engineer time to obtain an Environmental Protection Agency identification (EPA ID) number for the tank bottom/sludge removal, storage, hauling and disposal.
8. Dispose of tank in accordance with applicable Motor Carrier Safety and Hazardous Materials Transport requirements,
9. Recycle removed fuel and fuel/water mixture at a MPCA-permitted fuel recycling facility.
10. Dispose of tanks removed intact with tank bottom/sludge left in the tank with one of the following two contractors:

Determan Brownie, Inc. Minnesota Petroleum Service, Inc.

1241 72nd Ave NE,	682 39th Ave NE
Fridley, MN 55432	Columbia Heights, MN 55421-3842
Contact: Jon Pollock	Contact: Rick Anderson
763-502-9646	612-328-2223

24 hr service: 763-571-8110

11. Dispose of tanks dismantled on-site by recycling them as metal scrap.
12. Dispose of tank bottom/sludge removed on-site with the State Hazardous Waste Contractor. The Engineer will provide contact information for the current State Hazardous Waste Contractor.
13. Provide a signed, dated copy of the shipping paper for recyclable fuel to the Engineer no later than 10 days after delivery of recyclable fuel to the recycling facility.
14. Provide written certification and/or a signed, dated shipping paper for intact tank and tank bottom/sludge disposal to the Engineer no later than 10 days after delivery of tank and tank bottom/sludge to the disposal contractor.
15. Provide written certification and/or a signed, dated shipping paper for dismantled tank disposal at a metal scrap recycler to the Engineer no later than 10 days after delivery of a dismantled tank to the recycler.
16. Provide a signed copy of the "Notification/Change in Status for Underground Storage Tanks" form to the Engineer at the same time it is sent to the MPCA, no later than within 30 days after removal of the tank.

The Contractor shall complete the following additional requirements for each type of tank removal:

B6b <u>Residential Aboveground Heating Oil Storage Tank</u>

If the tank is located on an impermeable surface such as a basement, concrete vault, or in any other impermeable containment area with an intact floor, and there is no evidence of a release on the floor, no sampling is required.

If the tank is located on a permeable surface (such as a dirt floor basement or outside the residence), the tank location shall be sampled to determine the presence/absence of releases from the tank. The following requirements apply to ALL residential above-ground heating oil tanks on a permeable surface regardless of the tank size. The Contractor shall:

1. Obtain the services of an Environmental Consultant familiar with and experienced in tank removal operations to be present during tank removal, and to perform the following requirements. The Environmental Consultant shall:
   (a) Inspect the tank and the ground under the tank for evidence of leaks.
   (b) Monitor soils under the tank with a portable organic vapor detector in accordance with the MPCA Petroleum Remediation Program Fact Sheet #4.04 "Soil Sample Collection and Analysis Procedures", available at

http://www.pca.state.mn.us/cleanup/pubs/lustpubs.html, or by calling 1-800-657-3864.

(c) Collect soil samples as follows: One (1) soil sample shall be collected directly below each end of each tank (for a total of two bottom samples per tank). The samples shall be taken at least two feet below the ground surface. The samples shall be placed in appropriate laboratory supplied bottles, preserved, handled, and transported following chain-of-custody procedures.

(d) Analyze soil samples as follows using the indicated methods.

All samples shall be analyzed for:

- Diesel Range Organics (DRO) (Wisconsin Department of Natural Resources modified Method)
- Benzene, Toluene, Ethylbenzene, and Xylenes (BTEX) using a purge-and-trap gas chromatography procedure

2. Prepare a brief tank removal report describing the tank removal, sampling locations, and containing laboratory reports of sampling results.

B6c Residential Underground Heating Oil Storage Tank

The Contractor shall:

1. Obtain the services of an Environmental Consultant familiar with and experienced in tank removal operations to be present during tank removal, and to perform the following requirements. The Environmental Consultant shall:

(a) Inspect the removed tank for evidence of leaks.

(b) Monitor soils in the tank excavation cavity with a portable organic vapor detector in accordance with the MPCA Petroleum Remediation Program Fact Sheet #4.04 "Soil Sample Collection and Analysis Procedures", available at http://www.pca.state.mn.us/cleanup/pubs/lustpubs.html, or by calling 1-800-657-3864.

(c) Collect soil samples as follows: One (1) soil sample shall be collected directly below each end of each tank (for a total of two bottom samples per tank). The samples shall be taken at least two feet below the floor of the excavation, or at the water table, whichever is shallower. One (1) soil sample shall be taken from each wall of the final excavation (total of 4 sidewall samples per excavation). The soil samples shall be collected as grab samples. The samples shall be placed in appropriate laboratory supplied bottles, preserved, handled, and transported following chain-of-custody procedures.

(d) Collect ground water sample as follows: If the excavation at any point encounters ground water, one (1) ground water sample shall be collected immediately from the final excavation after the tank has been removed. The sample shall be placed in appropriate laboratory supplied bottles, preserved, handled and transported following chain-of-custody procedures.

(e) Analyze samples as follows using the indicated methods.

All soil bottom samples and ground water samples shall be analyzed for:

- Diesel Range Organics (DRO) (Wisconsin Department of Natural Resources modified Method)
- Benzene, Toluene, Ethylbenzene, and Xylenes (BTEX) using a purge-and-trap gas chromatography procedure

All soil sidewall samples shall be analyzed for:

- Diesel Range Organics (DRO) (Wisconsin Department of Natural Resources Modified Method)

2. Prepare a brief tank removal report describing the tank removal, sampling locations, and containing laboratory reports of sampling results.

B6d Aboveground Petroleum Storage Tank

The Contractor shall:

1. Obtain the services of an Environmental Consultant familiar with and experienced in tank removal operations to be present during tank removal, and to perform the following requirements. The Environmental Consultant shall:

(a) Inspect the tank and the ground under the tank for evidence of leaks.

(b) Monitor soils under the tank with a portable organic vapor detector in accordance with MPCA Petroleum Remediation Program Fact Sheet #4.04 "Soil Sample Collection and Analysis Procedures", available at http://www.pca.state.mn.us/cleanup/pubs/lustpubs.html, or by calling 1-800-657-3864.

(c) Collect soil samples as follows: One (1) soil sample shall be collected directly below each end of each tank (for a total of two bottom samples per tank). The samples shall be taken at least two feet below the ground surface. The samples shall be placed in appropriate laboratory supplied bottles, preserved, handled, and transported following chain-of-custody procedures.

(d) Analyze soil samples as follows using the indicated methods.

If the tank contained Regular Gasoline:

- Volatile Organic Compounds (VOC) listed in Minnesota Department of Health Method 466
- Gasoline Range Organics (GRO) (Wisconsin Department of Natural Resources modified method)
- Lead (EPA Method 6010)

If the tank contained Unleaded Gasoline:

- Volatile Organic Compounds (VOC) listed in Minnesota Department of health method 466

- Gasoline Range Organics (GRO) (Wisconsin Department of Natural Resources modified method)

If the tank contained new unused Fuel Oil, Motor Oil, Diesel Fuel, Kerosene, Jet Fuels, Mineral Oil/Spirits, Crude Oil, Stoddard Solvents OR if the tank contained Hydraulic Fluid:

- Volatile Organic Compounds (VOC) listed in Minnesota Department of Health Method 466
- Diesel Range Organics (DRO) (Wisconsin Department of Natural Resources modified method)

If the tank contained Used Oil:

- Volatile Organic Compounds (VOC) listed in Minnesota Department of Health Method 466
- Diesel Range Organics (DRO) (Wisconsin Department of Natural Resources modified method)
- Arsenic, Barium, Cadmium, Chromium, Lead, Mercury, Selenium, Silver (EPA Methods 6010, 7471, 7760)
- Polychlorinated Biphenyls (PCB) (EPA Method 8082A)

If the tank contents are unknown:

- Volatile Organic Compounds (VOC) listed in Minnesota Department of Health Method 466
- Gasoline Range Organics (GRO) (Wisconsin Department of Natural Resources modified method)
- Diesel Range Organics (DRO) (Wisconsin Department of Natural Resources modified method)
- Arsenic, Barium, Cadmium, Chromium, Lead, Mercury, Selenium, Silver (EPA Methods 6010, 7471, 7760)

2. Prepare a tank removal report describing the tank removal, sampling locations, and containing laboratory reports of sampling results.

B6e <u>Underground Petroleum Storage Tank</u>

The Contractor shall:

1. Obtain the services of an Environmental Consultant familiar with and experienced in tank removal operations to be present during tank removal, and to perform the following requirements. The Environmental Consultant shall:

   (a) Inspect the removed tank for evidence of leaks.

   (b) Monitor soils in the tank excavation cavity with a portable organic vapor detector in accordance with the MPCA Petroleum Remediation Program Fact Sheet #4.04 "Soil Sample Collection and Analysis Procedures", available at http://www.pca.state.mn.us/cleanup/pubs/lustpubs.html, or by calling 1-800-657-3864.

(c) Collect soil samples as follows: One (1) soil sample shall be collected directly below each end of each tank (for a total of two bottom samples per tank). The samples shall be taken at least two feet below the floor of the excavation or at the water table, whichever is shallower. One (1) soil sample shall be taken from each wall of the final excavation (total of 4 sidewall samples per excavation). The soil samples shall be collected as grab samples. The samples shall be placed in appropriate laboratory supplied bottles, preserved, handled, and transported following chain-of-custody procedures.

(d) Collect ground water samples as follows: If the excavation at any point encounters ground water, one (1) ground water sample shall be collected immediately from the final excavation after the tank has been removed. The sample shall be placed in appropriate laboratory supplied bottles, preserved, handled and transported following chain-of-custody procedures.

(e) Analyze samples as follows using the indicated methods.

The soil bottom samples shall be analyzed as described in B6d(1)(d).

The groundwater sample and the soil sidewall samples shall be analyzed for:

- Gasoline Range Organics (GRO) (Wisconsin Department of Natural Resources modified Method)
- Diesel Range Organics (DRO) (Wisconsin Department of Natural Resources Modified Method)
- Benzene, Toluene, Ethylbenzene, and Xylenes (BTEX) using a purge-and-trap gas chromatography procedure

2. Prepare a tank removal report describing the tank removal, sampling locations, and containing laboratory reports of sampling results.

B6f Notwithstanding the provisions of MnDOT 1801 relating to the allowable percentage of work which may be performed by a subcontractor, the Environmental Consultant may subcontract the analysis for the soil and water samples to a qualified laboratory approved by the Engineer, and the cost of the analyses may exceed 50 percent of the cost of the subcontractor with the Environmental Consultant.

Measurement includes tank removal, all sampling, and report writing. Payment will be made according to the following schedule: 80% will be paid after the tank and contents have been removed and disposed, and 20% will be paid following receipt of all test results, copies of required notifications, and final report.

S-59 (2104) REMOVING PAVEMENT AND MISCELLANEOUS STRUCTURES

Abandoned structures and other obstructions shall be removed from the Right of Way and disposed of in accordance with the provisions of Mn/DOT 2104 and the following:

S-59.1 All items designated for removal shall remain the property of the Contractor, be removed from the project site, and be disposed of at a site selected by the Contractor.

S-59.2 Unless otherwise provided for under separate Contract Items, the removal of portions of abandoned utility lines and pipes when required for the new construction will be incidental work for which no direct compensation will be made.

S-59.3 No direct compensation will be made for plugging holes in existing drainage structures when removing pipe sewers from structures which are to remain in place. All costs associated with constructing a masonry patch to the satisfaction of the Engineer shall be incidental to the appropriate pipe removal pay item.

S-59.4 Pavement removal shall be staged as necessary to comply with the requirements of construction staging, traffic control, and Mn/DOT 1404.

S-59.5 The Engineer shall have the right to require the removal of the existing pavement, curb, curb and gutter, sidewalk, and other removals as may be required throughout the Project to aid in the installation/relocation activities of the utility companies working within the project limits. Said removals shall be completed within 5 working days of the Engineer's order to do so and shall be completed at the appropriate Contract unit price.

S-59.6 The fourth paragraph of Mn/DOT 2104.5 is hereby replaced with "The removal of all bituminous surfacing, without regard to thickness, shall be paid for under Item 2104.505 Remove Bituminous Pavement."

S-59.7 Payment at the Contract unit price per each for Item 2104.509 Remove Manhole or Catch Basin and 2104.509 Remove Manhole shall be compensation in full for all costs of complete removal and disposal of the concrete base and all components of the existing casting assembly.

S-59.8 **Item 2104.501 Remove Chain Link Fence** in location SEFRONT 50+64 TO 57+74 RT the contractor shall keep the Right-of-Way along southeast frontage road right side securely closed up at all times. The securely closed fence will keep kids and pets within in their yards by means of the in place chain link fence, newly constructed fence, temporary fence (at the Contractor's expense), or a combination thereof. If the contract choose to use a temporary fence it must be as secure, sturdy, and tight as the existing fence. Any and all costs of any temporary fence measures shall be provided by the Contractor as an incidental expense to the Remove Chain Link Fence item of the Contract.

S-59.9 Item **2104.503 Remove Wood Retaining Wall** is for the removal of the existing Wood retaining wall to construct retaining wall No. 3 as shown on sheets 288-294 within the acquired right of way.

S-59.10 Regardless of the availability of sidewalks on the opposite side of the street, the time between sidewalk removal and construction of the replacement sidewalk shall be minimized as much as possible.

S-59.11 In all locations where sidewalk removal and construction activities are to occur immediately adjacent to the only entrance to a business or a residence the Engineer hereby reserves the right to restrict sidewalk removals to no more than he anticipates the Contractor will be able to reconstruct in the same day. It shall be the Contractor's responsibility to coordinate the sidewalk removal and reconstruction with the affected businesses and residents and provide temporary hard surfaced access (bituminous, wood, steel plates, etc.) as approved by the Engineer. In the event adverse weather

conditions exist or may be anticipated during any time sidewalks are out of service, the Contractor shall be prepared to immediately install a hard surfaced access as directed by the Engineer. **All temporary accesses** shall be maintained continuously until such time that the new sidewalk can be placed. Any and all costs of any temporary access measures shall be provided by the Contractor as an incidental expense to the sidewalk items of the Contract.

S-59.12 No portions of existing sidewalks shall be removed until the Engineer has expressly authorized its removal.

S-59.13 No existing hard-surfaced driveways (concrete or bituminous) shall be removed until the Engineer has expressly authorized their respective removal.

S-59.14 All structures removed in accordance with this 2104 bid item shall also be disposed of in accordance with the attached Dakota County Solid Waste Management Ordinance No. 110.

S-59.15 Measurement and payment for the removal and disposal of materials will be made only for those Items of removal work specifically included for payment as such in the Proposal and as listed in the Plans. The removal of any unforeseen obstruction requiring in the opinion of the Engineer equipment or handling substantially different from that employed in excavation operations, will be paid for as Extra Work as provided in Mn/DOT 1403.

S-60 (2104) REMOVE AND HAUL TREATED WOOD

If the Contractor is required to dispose of treated wood, the provisions of Mn/DOT 2104 are supplemented with the following:

The Contractor can elect to reuse the treated wood for its original intended purpose. The Contractor shall furnish a completed Transfer of Ownership form to the Engineer prior to removing any treated wood from the Project limits. The Transfer of Ownership form is available at the following website: **http://www.dot.state.mn.us/environment/regulated-materials/pdf/treated-wood-transfer.pdf .**

S-60.1 If the Contractor cannot or elects not to re-use the treated wood for its original intended purpose, but must be disposed, the following shall apply:

(A) The Contractor shall dispose of all waste treated wood in a MPCA permitted Minnesota solid waste or industrial landfill. The Contractor shall not dispose of waste treated wood in a demolition landfill. Within 30 days after the treated wood is transported to the landfill, the Contractor shall provide the Engineer with shipping manifests, scale tickets and invoices. Shipping manifests shall include, but are not limited to, the following information: specify treated wood as the type of waste, quantity of wood, date of hauling and disposal, and location of disposal.

(B) The Contractor has the option to chip creosote treated wood on site instead of hauling it to a landfill. After the wood is chipped on site, the Contractor shall transport the chipped wood off site to a MPCA permitted incinerator that is permitted to burn creosote treated wood. Call 651.366.3630 for list of incinerators permitted to burn creosoted treated wood. This applies to creosote treated wood only.

S-60.2 Measurement and payment for the removal and disposal of treated wood will be made only when specifically included for payment as such in the Proposal and as listed in the Plans. All other removal and disposal of treated wood operations shall be incidental work and no direct compensation will be made therefore.

S-61 (2104) HAUL SALVAGED MATERIALS

This work shall consist of loading and hauling salvaged materials, not required for installation elsewhere under this Contract, to the designated storage area(s) and depositing said materials thereat in a manner satisfactory to the Engineer.

S-61.1 The designated storage area is TO BE PROVIDED BY THE CITY OF BURNSVILLE.

The Contractor shall carefully clean and bundle, if appropriate, the salvaged materials to the satisfaction of the Engineer prior to loading.

The Contractor shall give the Engineer at least 24 hours' notice before salvaged materials are to be delivered to the storage area so that arrangements can be made to have a yard man available to accept the salvaged materials.

It shall be the Contractor's responsibility to neatly stockpile the material at the storage site with his forces as directed by the Engineer.

Salvaged material shall arrive at the storage area in carefully segregated lots so that it can be easily and quickly placed in its proper storage location. The Contractor shall unload the salvaged material and place it at the locations in the yard designated by the yard man.

S-61.2 No measurement will be made of the individual items, but the haul of all such items shall be construed to be included in the single lump sum for which payment is made.

S-61.3 Payment will be made under Item 2104.601 (Haul Salvaged Material) at the Contract lump sum bid price, which shall be payment in full for all costs relative to hauling the materials to, and depositing the materials, at the locations specified.

S-62 (2104) SALVAGE CONCRETE BLOCK RETAINING WALL

This work shall consist of salvaging a small block retaining wall located between All Cars and Cassidy Industrial Properties. The salvaged wall shall be stored on the property for reconstruction later in the project. For location, see Sheet No. 92 of the Plan.

S-62.1 Measurement will be by the square foot of wall salvaged as specified.

S-62.2 Payment will be made under Item 2104.618 (Salvage Concrete Block Retaining Wall) at the Contract bid price per [square foot] which shall be compensation in full for all costs relative thereto.

S-63 (2105) DEWATERING

This work shall consist of installing a single to a multiple series of well points and pumps to temporarily depress the water table to allow for construction of sanitary sewer, water-main, pipe and box culverts, bridge and wall foundations, ditches/channels, ponds and other areas to

be constructed "in the dry" (as opposed to under wet conditions). This work shall be done in accordance with the applicable Mn/DOT Standard Specifications, the Plans, and the following:

S-63.1 GENERAL

(A) Permits

1. Obtain permits required by Minnesota Department of Natural Resources (Mn/DNR) if total discharge from dewatering wells is anticipated to exceed, or actually exceeds 10,000 gallons per day, or 1,000,000 gallons per year.
2. Comply with requirements of all permits.
3. Comply with local and State installation requirements and sediment control regulations.

(B) Requirements

1. Maintain site, excavations, and construction free of water.
2. Dispose of treated water in a lawful manner that will not result in flooding the Project area or adjoining property, nor endanger either permanent work or temporary facilities nor rendering storm water best management practices ineffective.

(C) Methods

1. Have all dewatering methods reviewed and approved, as per **Sections: S-26 (1702) PERMITS, LICENSES, AND TAXES, S-33 (1717) AIR, LAND AND WATER POLLUTION, S-35 (1717) NATIONAL POLLUTANT DISCHARGE ELIMINATION SYSTEM (NPDES) PERMIT, and S-128 (2573) STORM WATER MANAGEMENT** of these Special Provisions, by the Project Engineer prior to starting work on site, or submitting Mn/DNR permit, whichever occurs first.

(D) Submittals

1. At least seven (7) calendar days prior to submitting Mn/DNR permit or initiating dewatering procedures, the Contractor shall submit a dewatering plan to the Engineer for approval. The Contractor's dewatering plan shall be in writing and shall contain sufficient drawings to fully illustrate staging concepts involved and ultimate discharge locations. The plans shall describe all facilities and procedures required to dewater the work area as necessary. In addition, work on this Project shall not start until the dewatering plan has been approved by the Minnesota Department of Natural Resources if required. Contractor may incorporate permanent Project features into the dewatering.
2. Submit a work and erosion control schedule, as per **Sections S-33 (1717) AIR, LAND AND WATER POLLUTION, S-35 (1717) NATIONAL POLLUTANT DISCHARGE ELIMINATION SYSTEM (NPDES) PERMIT, and S-128 (2573) STORM WATER MANAGEMENT** of these Special Provisions, with the Plan, which indicates timing of dewatering stages.

S-63.2 PRODUCTS

(A) Materials

1. Materials, whether new or used, shall be adequate in capacity for required usage, must not create unsafe conditions, and must not violate

requirements of applicable codes and standards.

S-63.3 EXECUTION

(A) Protection

1. Protect trees, shrubs, lawns and construction area from damage due to installation and operation of dewatering devices.
2. Suggested methods to minimize sediment from entering a surface water are:
   (a) Construction of a detention basin with controlled rock weeper outlets. Use of a portable detention basin (eg. plastic lined dumpster, commercial dewatering dumpster) or upland sump, and active staged pumping. Utilization of floc logs and liquid floc injection.
   (b) Pump turbid water away from surface waters and into vegetation buffers, rock weepers or other approved energy dissipation measures.
3. Do not allow water discharge to run over roads, parking areas, or work areas where water or ice could cause a hazardous condition.
4. Protect existing or completed work and installed storm water best management practices from excessive water or sedimentation damage.
5. Protect workers and public from temporary structures or basins.
6. Do not allow water to run over work in progress.

(B) Installation

1. Install dewatering devices adequate to keep the work dry and free of ground water to an elevation at least 1 foot below elevation work is being done.
2. Install sedimentation basins and items shown in the Site Plan as necessary to prevent turbid runoff or discharge.
3. Install dikes, riprap, culverts, and piping as necessary to prevent erosion of site or siltation of surface waters.
4. Dewatering must be maintained until utilities or structures are backfilled.
5. Remove unneeded materials, equipment, and pipe upon completion to the satisfaction of the Project Engineer. Seal wells as required by Minnesota Well Code.

Install temporary or permanent erosion control measures to restore or stabilize the area as necessary and as per construction staging and sequencing.

S-63.4 REMOVAL OF SEDIMENT AND RESTORATION OF PROPERTY

If sediments and debris leave the area disturbed by the Contractor's construction activities, it shall be the sole responsibility of the Contractor to notify the affected parties, acquire necessary permits, remove the sediments, deltas and debris, and restore the affected area to the pre-damaged condition. The Contractor's work to restore property outside the Right of Way shall be at no expense to the Department.

Ground Water Data

Ground water elevations were monitored for the piezometers listed below.

Ground water elevations encountered during construction may vary somewhat depending on seasonal and annual rainfall variations.

The following tabulation of piezometer readings indicate the existing ground water conditions. Additional readings will be furnished on request.

Piezometer No.	Coordinate Location	High Elev.	Low Elev.	Termination
730914	x=502994 y=209612	739.8	731.5	A

A) Removed by MnDOT.

S-63.5 MEASUREMENT AND PAYMENT

No measurement will be made of any of the dewatering, but all such work shall be construed to be included in the single Lump Sum Payment under Item 2105.601 (Dewatering). Such payment shall be compensation in full for all costs incidental thereto, including labor, equipment, and materials for performing all dewatering operations as specified.

S-64 (2105) EXCAVATION SPECIAL

The Contractor will encounter miscellaneous solid waste (such as: concrete, asphalt, wood, brick, sheet metal, cables, plastic sheeting, etc. intermixed with soil).

S-64.1 The solid waste will be segregated for uncontaminated recognizable concrete and bituminous materials that can be effectively recycled following the Standing Beneficial Use Determinations established by the Minnesota Pollution Control Agency (MPCA). Solid waste that cannot be recycled will be completely removed and disposed of off-site at a Minnesota Pollution Control Agency approved Municipal Solid Waste and/or Industrial Solid Waste Landfill permitted to accept this type of waste. Additional segregation of regulated waste (i.e., batteries, mercury switches) if encountered, may be required.

S-64.2 The Contractor shall comply with all applicable safety regulations imposed by Federal and State law for handling pollutants, contaminants, or hazardous substances, wastes or materials, including but not limited to 29 CFR Part 1910 and all subsequent revisions thereof.

S-64.3 The Contractor shall file a site Health and Safety Plan with the Engineer for review and comment prior to beginning the excavation and removal of solid waste.

S-64.4 SOLID WASTE AREA

(A) Investigations of the Project area identified a solid waste area within Project limits:

The approximate location of solid waste and estimated percentage of debris is depicted on Sheet 90 of the Plan. This information is based off of the **Phase II Environmental Site Assessment** report prepared by URS dated September 29, 2011. Suspect asbestos containing materials (ACMs) in mortar coating, tile, and fibrous concrete were bulk sampled and analyzed by polarized light microscopy (PLM). No asbestos was identified within the bulk samples. Five painted surfaces on wood and brick debris were analyzed for lead. Concentrations of

lead within the painted surfaces ranged from non-detect up to 7.6% (or 76,000 parts per million (ppm)).

(B) The reports that were completed for this project are available for review by potential bidders. Please contact John Sass at (952) 891-7130 to arrange an appointment to review the data.

S-64.5 SOLID WASTE EXCAVATION/MANAGEMENT

(A) The Contractor shall excavate and dispose of contaminated soil as described in **SOLID WASTE AREA**.

(B) The Contractor shall notify the Engineer no less than three (3) working days prior to beginning the excavation to allow the Engineer time to arrange for the Dakota County's Environmental Consultant to be at the site to observe and document the excavation, handling and management of the solid waste.

(C) No excavation of solid waste shall take place without the approval of the Engineer, nor shall any solid waste be excavated unless Dakota County's Environmental Consultant is present. Dakota County's Environmental Consultant will determine which solid waste can be recycled. Excavation beyond the limits shown on the cross sections of the Plan shall not occur unless approved by the Engineer.

(D) All solid waste excavated from the Project Limits, described in **SOLID WASTE AREA**, shall be segregated for uncontaminated recognizable concrete and bituminous materials that can be effectively recycled following the Standing Beneficial Use Determinations established by the Minnesota Pollution Control Agency (MPCA). Solid waste that cannot be recycled will be completely removed and disposed of off-site at a Minnesota Pollution Control Agency approved Municipal Solid Waste and/or Industrial Solid Waste Landfill permitted to accept this type of waste. Off-site disposal shall be in accordance with all applicable local, State, and Federal regulations. Any disposal or environmental fees associated with removal shall be incidental to the removal.

1) The Contractor shall be responsible for providing all required information to the landfill (typically waste profile forms and soil analytical laboratory reports) in order to obtain landfill acceptance of the contaminated soil.

2) The Contractor shall determine if the Dakota County's existing information (obtained from the Engineer) are sufficient for the landfill to accept the solid waste. The Contractor shall immediately inform the Engineer if additional information is required by the landfill. The Contractor shall dig test pits or conduct environmental drilling, as approved by the Engineer, in order for the Dakota County's Environmental Consultant to access the area to collect samples for additional analyses required by the landfill. Sample analytical turnaround time is typically 5 working days. Dakota County will be responsible for any additional soil sample laboratory analyses required by the landfill.

3) The Contractor shall provide the landfill-required waste profile form(s) to the Engineer for review and signature a minimum of two weeks prior to beginning excavation or as approved by the Engineer.

4) Solid waste shall not be hauled to the landfill facility until the Engineer has a written approval (e-mail is acceptable) from the landfill accepting the contaminated material for daily cover/disposal at the landfill facility.

5) The Engineer will require loads to be covered (tarped) while in transit at no cost to the County.

6) The Contractor shall provide copies of all shipping papers (manifests) and landfill scale tickets for each load to Dakota County's Environmental Consultant daily while material is being hauled to the landfill, or as approved by the Engineer.

(E) If the Engineer determines that the excavated solid waste cannot be immediately hauled to the landfill (for example, because of unknown contaminant concentrations or types), the solid waste must be temporarily stockpiled at a location approved by the Engineer. Any additional costs for temporarily stockpiling solid waste as required by **TEMPORARY STOCKPILE OF SOLID WASTE** will be considered Extra Work and will be paid for in accordance with MnDOT 1403. If the stockpile contains both solid waste and contaminated soil, the Contractor can only claim additional work for either **TEMPORARY STOCKPILE OF SOLID WASTE** OR **TEMPORARY STOCKPILE OF CONTAMINATED SOIL** (not both).

(F) Once a stockpile is placed and secured, and the Contractor elects to move the stockpile to a new location because the stockpile is in the way of construction, the cost of moving and re-stockpiling the soil as required by **TEMPORARY STOCKPILE OF SOLID WASTE** shall be incidental.

(G) If the Contractor elects to temporarily stockpile solid waste described in **SOLID WASTE AREA** before hauling it to the landfill, all costs incurred for temporarily stockpiling the solid waste as required by **TEMPORARY STOCKPILE OF SOLID WASTE** shall be incidental.

S-64.6 RESPONSE ACTION PLAN

Based on our review, data derived from recent investigation have adequately characterized site conditions for the purpose of developing a RAP for the TH 13/CSAH 5 Project. Dakota County has developed the following RAP that incorporates planned property use and risk mitigation strategies in the decision making process. Details of the proposed Response Action Plan (RAP) for the TH 13/CSAH 5 Interchange Area are provided in the remaining portions of this report section. Report prepared by URS dated February 03, 2012.

S-64.7 AMBIENT AIR MONITORING

The Contractor will conduct ambient air monitoring (AAM) during excavation activities for construction of 126th St W due to documented elevated metals concentrations, primarily mercury, in fill soils associated with demolition dump debris.

The primary objective of AAM will be to mitigate excessive dust generation and exposure to airborne metals adhered to particulate matter during construction earthwork. U.S. Environmental Protection Agency (EPA) screening levels for metals of concern (mercury and lead) will likely not be exceeded if the ambient level of respirable particulate matter (PM10) does not exceed the National Ambient Air Quality Standard (NAAQS) of 150 micrograms per cubic meter (□g/m3). Therefore, control of particulate

matter (dust) should also achieve control of other metals compounds. Proposed action levels for dust control are summarized in tabular form below.

Dust Monitoring Action Levels

Measured PM_{10} Value[a]	*Action*
Any visible dust emissions from site activities	Implement dust controls (e.g., water sprays).
> 100 □g/m^3	Implement dust controls.
>250 □g/m^3	Increase application rate of dust controls and/or reduce rate of soil handling operations.
>500 □g/m^3	Stop work until dust level falls below 250 □g/m^3. Continue wetting of soils.

Note:
[a] = Based on five-minute average data for net ground level (NGL) concentration (downwind – upwind)

The Contractor will collect continuous PM10 data during earthwork in the above areas using up to two personal DataRAM units (or equivalent). The air monitors will be placed downwind of the active construction zone and between the construction zone and nearby airborne receptors (if applicable). The air monitors will be programmed to emit an audible alarm if PM10 concentrations exceed 100 □g/m3 and appropriate dust mitigation procedures (as described above) will be implemented until particulate matter falls below acceptable levels.

S-64.8 MEASUREMENT AND PAYMENT

Payment for solid waste materials that are excavated, sorted, and recycled shall be considered incidental to 2105.607 Excavation Special.

Payment for 2105.607 Haul and Dispose of Contaminated Material at the contract unit price per CU. YD. shall include the complete loading, hauling, ambient air monitoring and off-site disposal of the solid waste including any environmental and disposal fees. The County will determine the quantities by excavated volume of the excavation material in its original position. Volumes will be computed by the average end area method determined from original and final cross-sections. All Excavation Special material shall be hauled off the project but only that material deemed to be contaminated needs to be hauled to an approved landfill.

Backfilling and compaction of the excavation to lines and grades shown on the plans will not be measured or paid for separately.

S-64.9 TEMPORARY STOCKPILE OF SOLID WASTE

If the Contractor chooses to temporarily stockpile solid waste at a location approved by the Engineer, the Contractor shall place solid waste on and cover the stockpile with minimum ten (10) mil reinforced plastic. The Contractor shall securely cover the pile and anchor the cover at the end of each day. Contractor shall surround the stockpile with fencing, if the Engineer determines that additional security measures are necessary. Contractor shall be responsible for the maintenance of the stockpile cover (and fencing if installed) for the duration of the Contract or as otherwise approved by the

Engineer. Contractor shall inspect the stockpile at least once per week or as otherwise approved by the Engineer.

S-64.10 SOLID WASTE CONTINGENCY PLAN

A. In the event on-site observations indicate contaminated materials or contaminated soil as listed in MnDOT 1717 have been encountered in the Project area in locations other than those described in **SOLID WASTE AREA**, the Contractor shall follow the procedure outlined in MnDOT 1717.
B. After the Engineer has given approval to the Contractor to resume work in the contaminated area, the Contractor shall be prepared to follow **SOLID WASTE EXCAVATION/MANAGEMENT**.

S-65 (2105) CONTAMINATED SOIL AND GROUNDWATER

All contaminated material found on the Project shall be handled according to the following provision unless otherwise directed by the Engineer. The Contractor shall comply with all applicable safety regulations imposed by federal and state law for handling pollutants, contaminants, or hazardous substances, wastes, or materials, including but not limited to 29 CFR PART 1910 and all subsequent revisions thereof. The Contractor shall file a project **Health and Safety Plan** with the Engineer at the Preconstruction Conference.

S-65.1 CONTAMINATED SOIL

(A) An investigation of the Project area for contamination found two contaminated areas within the Project limits according to Dakota County Ordinance 110.

The areas are:

(1) On Plan Sheet 90. In addition to the solid waste (handling described in 2105 Excavation Special), soil has detections of mercury up to 1.5 parts per million (ppm), diesel range organics (DRO) of up to 35.1 ppm, BaP equivalents of up to 1.19 ppm from the surface down. Although these concentrations are below MPCA industrial guidelines, Dakota County Ordinance 110 considers this material to be contaminated. Groundwater was not encountered with the test pits.
(2) On NW Loop 1 from approximate station 82+50 to 83+50, soil had detections of lead at 14.1 ppm and BaP equivalents at 0.045 ppm from 0 to 3 feet below grade. Although concentrations are below MPCA residential guidelines, Dakota County Ordinance 110 considers this material to be contaminated. Groundwater was not encountered with this shallow sample. If contaminated material is encountered during excavation, this material shall also be hauled to an approved landfill.

(B) Data from the environmental testing that has been completed for this project are available for review by potential bidders. Please contact John Sass at (952) 891-7130 to arrange an appointment to review the data.

S-65.2 CONTAMINATED SOIL MANAGEMENT

(A) The Contractor shall excavate and dispose of contaminated soil as described in **CONTAMINATED SOIL**.

(B) The Contractor shall notify the Engineer no less than three (3) working days prior to beginning the excavation and removal of contaminated soil to allow the Engineer time to arrange for the Dakota County's Environmental Consultant to be at the site to observe and document the excavation, handling and disposal of the contaminated soil.

(C) No excavation of contaminated soil shall take place without the approval of the Engineer, nor shall any contaminated soil be excavated unless Dakota County's Environmental Consultant is present. The Dakota County's Environmental Consultant will determine which soils are to be considered contaminated. Soils shall not be excavated beyond the limits shown on the cross sections in the Plan, or as approved by the Engineer.

(D) All soil excavated from the Project Limits, described in **CONTAMINATED SOIL**, shall be hauled to a Minnesota permitted solid waste or industrial landfill facility for disposal as daily cover if it meets the requirements of daily cover.

(1) The Contractor shall be responsible for providing all required information to the landfill (typically waste profile forms and soil analytical laboratory reports) in order to obtain landfill acceptance of the contaminated soil.

(2) The Contractor shall determine if Dakota County's existing soil analytical data (obtained from the Engineer) are sufficient for the landfill to accept the contaminated soil. The Contractor shall immediately inform the Engineer if additional soil analytical data are required by the landfill. The Contractor shall dig test pits or conduct environmental drilling, as approved by the Engineer, in order for Dakota County's Environmental Consultant to access contaminated soil to collect samples for additional analyses required by the landfill. Sample analytical turnaround time is typically 5 working days. Dakota County will be responsible for any additional soil sample laboratory analyses required by the landfill.

(3) The Contractor shall provide the landfill-required waste profile form(s) to the Engineer for review and signature a minimum of two weeks prior to beginning excavation or as approved by the Engineer.

(4) Contaminated material shall not be hauled to the landfill facility until the Engineer has a written approval (e-mail is acceptable) from the landfill accepting the contaminated material for daily cover/disposal at the landfill facility.

(5) The Engineer will require loads to be covered (tarped) while in transit at no cost to the County.

(6) The Contractor shall provide copies of all shipping papers (manifests) and landfill scale tickets for each load to the Counties Environmental Consultant daily while material is being hauled to the landfill, or as approved by the Engineer.

(E) If the Engineer determines that the excavated soil cannot be immediately hauled to the landfill (for example, because of unknown contaminant concentrations or types), the contaminated soil must be temporarily stockpiled at a location approved by the Engineer. Any additional costs for temporarily stockpiling contaminated soil as required by **TEMPORARY STOCKPILE OF CONTAMINATED MATERIAL** will be considered Extra Work and will be paid for in accordance with MnDOT 1403. If the stockpile contains both solid waste and contaminated soil, the Contractor can only claim

additional work for either **TEMPORARY STOCKPILE OF SOLID WASTE OR TEMPORARY STOCKPILE OF CONTAMINATED SOIL** (not both).

(F) Once a stockpile is placed and secured, and the Contractor elects to move the stockpile to a new location because the stockpile is in the way of construction, the cost of moving and re-stockpiling the soil as required by **TEMPORARY STOCKPILE OF CONTAMINATED MATERIAL** shall be incidental.

(G) If the Contractor elects to temporarily stockpile soil described in Contaminated Soil before hauling it to the landfill, all costs incurred for temporarily stockpiling the contaminated soil as required by TEMPORARY STOCKPILE OF CONTAMINATED MATERIAL shall be incidental. Fencing is not required for this stockpile.

S-65.3 MEASUREMENT AND PAYMENT

Measurement will be made by the volume of the material disposed. Payment will be made under Item 2105.607 (Haul and Dispose of Contaminated Materials) for loading and hauling the material identified in **CONTAMINATED SOIL**. Payment will be made at the Contract bid price per cubic yard compacted volume, which shall be payment in full for all permits, disposal fees, loading and hauling of material, tarping loads (incidental) and all costs relative thereto. One cubic yard (CV) equals 1.8 tons.

S-65.4 CONTAMINATED SOIL CONTINGENCY PLAN

(A) In the event on-site observations indicate contaminated materials or contaminated soil as listed in MnDOT 1717 have been encountered in the Project area in locations other than those described in **CONTAMINATED SOIL**, the Contractor shall follow the procedure outlined in MnDOT 1717.

(B) After the Engineer has given approval to the Contractor to resume work in the contaminated area, the Contractor shall not excavate any contaminated materials or soil unless the Dakota County's Environmental Consultant is present. Dakota County's Environmental Consultant will observe and document the excavation work in the contaminated area, and will screen soil to determine which materials or soils are to be considered contaminated. Contaminated materials or soils shall not be excavated beyond the limits shown on the cross sections in the Plan, or as approved by the Engineer.

(C) The Contractor shall be prepared to haul contaminated materials or soil to a Minnesota permitted solid waste or industrial landfill facility for disposal as daily cover if it meets the requirements of daily cover.

1) The Contractor shall be responsible for providing all required information to the landfill (typically waste profile forms and soil analytical laboratory reports) in order to obtain landfill acceptance of the contaminated soil.

2) Dakota County will be responsible for any soil sample laboratory analyses required by the landfill. The Contractor shall dig test pits or conduct environmental drilling, as approved by the Engineer, in order for the Dakota County's Environmental Consultant to access contaminated soil to collect samples for analyses required by the landfill. Sample analytical turnaround time is typically 5 working days.

3) The Contractor shall provide the landfill-required waste profile form(s) to the Engineer for review and signature a minimum of 48 hours or as approved by the Engineer.

4) Contaminated material shall not be hauled to the landfill facility until the Engineer has a written approval (e-mail is acceptable) from the landfill accepting the contaminated material for daily cover/disposal at the landfill facility.

5) The Engineer will require loads to be covered (tarped) while in transit at no cost to the County.

6) The Contractor shall provide copies of all shipping papers (manifests) and landfill scale tickets for each load to Dakota County's Environmental Consultant daily while material is being hauled to the landfill, or as approved by the Engineer.

(D) If the Engineer determines that the excavated contaminated soil from any known or unexpected contaminated areas cannot be immediately hauled to the landfill (for example, because of unknown contaminant concentrations or types), the contaminated soil must be temporarily stockpiled at a location approved by the Engineer. Once a stockpile is placed and secured, and the Contractor elects to move the stockpile to a new location because the stockpile is in the way of construction, the cost of moving and re-stockpiling the soil shall be incidental. Any additional costs for temporarily stockpiling contaminated soil as required by **TEMPORARY STOCKPILE OF CONTAMINATED MATERIAL** will be considered Extra Work and will be paid for in accordance with MnDOT 1403. If the stockpile contains both solid waste and contaminated soil, the Contractor can only claim additional work for either **TEMPORARY STOCKPILE OF SOLID WASTE** OR **TEMPORARY STOCKPILE OF CONTAMINATED SOIL** (not both).

(E) If the Contractor elects to temporarily stockpile contaminated soil, all costs incurred for temporarily stockpiling the contaminated soil as required by **TEMPORARY STOCKPILE OF CONTAMINATED MATERIAL** shall be incidental.

S-65.5 MEASUREMENT AND PAYMENT

(F) Excavation and loading of contaminated material found in areas other than those described in CONTAMINATED SOIL will be Extra Work and will be paid for in accordance with MnDOT 1403.

S-65.6 TEMPORARY STOCKPILE OF CONTAMINATED MATERIAL

The stockpile will be placed at a location on the Project as approved by the Engineer. The Contractor shall place contaminated soil from separate contaminated areas into separate stockpiles or as approved by the Engineer. The Contractor shall stockpile the contaminated soil on minimum 10 mil plastic, and cover the stockpile (minimum at end of each work day) with minimum 10 mil reinforced plastic. The stockpile shall be surrounded by fencing if the Engineer determines that additional security measures are necessary. The stockpile cover shall be securely anchored. The Contractor shall be responsible for the maintenance of the stockpile cover (and fencing if installed) for the

duration of the Contract or as approved by the Engineer. The stockpile shall be inspected a minimum of once per week or as approved by the Engineer.

S-66 (2106) EXCAVATION AND EMBANKMENT

The provisions of Mn/DOT 2106 are as follows:

2106.1 Description

This is an Excavation/Embankment Project in which payment of the excavation items and embankment items will be payment in full for all work associated with the grading operations. No shrinkage factors have been applied to any Excavation or Embankment items. The Contractor is responsible to fully construct the embankment sections as specified in the Plan and Special Provisions. Material generated from the specified excavations on the Project may be utilized in the embankment sections, where applicable, if the material meets the specifications of the Contract. No separate payment will be made for obtaining grading materials from off the Project nor will any payment be made for disposing of unsuitable or excess material.

Obtain compaction on the Grading portion of construction with the “Specified Density Compaction Method” requirements.

Obtain compaction on the Grading and Aggregate Base portions of temporary construction in accordance with the “Quality Compaction Method” requirements.

2106.2 Materials

A Excavation Materials

All classifications of excavation shall be performed as indicated in the typical sections, cross sections, and other details of the Plan. The excavations will be classified for payment in accordance with the following provisions:

A1 **Excavation – Common** shall consist of all excavation materials not classified herein as Excavation – Rock, Excavation – Muck and shall include the excavations classified as Excavation – Subgrade when a separate item therefore is not included in the Proposal.

A2 **Excavation – Subgrade** shall consist of all excavations made below the top of the final graded surface of the road and **between** the shoulder slopes that are not made for the purpose of obtaining slope dressing and where the excavation materials are not classified for payment as Excavation - Rock or Excavation – Muck .

A3 **Excavation - Muck** shall consist of excavation of all saturated and unsaturated mixtures of soil and organic matter not suitable **for** foundation material regardless of moisture content, that is removed from below the natural ground level (or as otherwise defined in the Plan) of marshes, swamps, and bogs over which embankments are to be constructed, where the excavation is required:

a) To provide a stable foundation for embankments, or

b) To accelerate the subsidence of unstable material under embankment load.

A4 **Excavation – Rock shall** consist of all materials that cannot, in the Engineer's opinion, be excavated without drilling and blasting or without the use of rippers, together with all

boulders and other detached rock each having a volume of 1 cubic meters (**1 cubic yards**) or more. All work shall be performed in accordance with the Special Provisions.

B Embankment Materials

All embankment material furnished from sources selected by the Contractor must be approved by the Engineer prior to being delivered to the Project. The Contractor shall give the Engineer sufficient notice to permit any testing of the material that may be required for approval.

Embankment material will be classified in accordance with the material requirements given below. All classifications of embankment shall be placed as indicated in the typical sections, cross sections, and other details of the Plan.

B1 Common Embankment

Common Embankment (CV) is a combination of materials including Select Grading material, Regular Grading material and slope dressing material.

Select Grading material shall include all mineral soils in accordance with the Triaxial Chart in the Mn/DOT Grading and Base Manual, except silt. Unsuitable materials shall include debris, marl, peat, wood, or any other organic soils. Select Grading material should be reserved for embankment placement within the roadway core.

Unless otherwise shown in the Plan, the roadway core shall be considered as the area of the typical section inside the 1:1 (v:h) slope down and out from the grading shoulder PI (point of intersection) or the inslope PI otherwise indicated on the typical section for fills less than 30 feet in height. For fills greater than 30 feet in height, the roadway core shall be considered as the area of the typical section inside the 1:1.5 (v:h) slope down and out from the grading shoulder PI or the inslope PI otherwise indicated on the typical section.

Regular Grading material shall be considered mineral soils that are not classified as Select Grading material listed above. Peat, excess slope dressing material, and other organic soils (free from wood and debris) shall also be considered as Regular Grading material. The Contractor may also elect to use a portion of the available Select Grading material and incorporate this material into the Project as Regular Grading material. Regular Grading material shall only be placed outside of the roadway core and in a manner in which the material will maintain long term stability.

The Contractor shall place slope dressing material as indicated in the Plan. This slope dressing is included as a portion of the total Common Embankment (CV) quantity. Slope dressing material shall be considered “A” horizon soils as defined in the Soils Profile section of the Mn/DOT Grading and Base Manual and as approved by the Engineer. Peat and other organic soils may also be used to supplement the available slope dressing material if approved by the Engineer.

In certain regions of the state, it is anticipated that only minimal organic material will be available for slope dressing. In those instances, the Plan will indicate that the upper 100 mm (**4 inches**) of the inplace soils or the upper 100 mm (**4 inches**) of an undisturbed naturally occurring soils profile may also be used as slope dressing material.

The slope dressing material shall not contain debris and any stones exceeding 75 mm (**3 inches**) in its greatest dimension on the soil surface at the time of performing the

final finishing and turf establishment operations and shall be removed from the Project site. The debris and stones shall be disposed of in accordance with 2104.3C (Disposal of Materials and Debris). Removal of pre-existing debris and stone encountered in the undisturbed slope dressing material on the Project will be paid for as Extra Work as long as the material was not contaminated or altered by the Contractor.

The Contractor shall be responsible for providing the required quantity of slope dressing material that is capable of fostering plant growth to meet the turf establishment requirements of the Plan. The Contractor shall provide the slope dressing material, regardless of source, at no additional cost to the Department.

B2 Granular Embankment

All Granular Embankment (CV) material shall meet all the requirements of Granular Borrow as per 3149.2B1.

B3 Select Granular Embankment

All Select Granular Embankment (CV) material shall meet all the requirements of Select Granular Borrow as per 3149.2B2.

B4 Select Granular Embankment Modified

All Select Granular Embankment Modified (CV) material shall meet all the requirements of Select Granular Borrow as per 3149.2B2, however the ratio of the portion passing the 75 µm (**#200**) divided by the portion passing the 25 mm (**1 inch**) shall be modified from 12 percent to the percentage indicated in the Plan.

B5 Granular Embankment – Muck

All Granular Embankment - Muck (CV) material shall meet all the requirements of Granular Borrow as per 3149.2B1. In the event that the upper limits of muck excavation backfill is not defined in the Plan, payment for the Granular Embankment - Muck (CV) shall be computed in the estimated quantities of the Plan to an elevation of 600mm **(2 feet)** above water level at the commencement of muck excavation operations, or to the previous undisturbed ground elevation, whichever is higher.

B6 Select Granular Embankment – Muck

All Select Granular Embankment - Muck (CV) material shall meet all the requirements of Select Granular Borrow as per 3149.2B2. In the event that the upper limits of muck excavation backfill is not defined in the Plan, payment for the Select Granular Embankment - Muck (CV) shall be computed in the estimated quantities of the Plan to an elevation of 600 mm **(2 feet)** above water level at the commencement of muck excavation operations, or to the previous undisturbed ground elevation, whichever is higher.

C Stabilizing Aggregate 3149

2106.3 Construction Requirements

A General

The Contractor shall complete all clearing and grubbing operations in an area according to 2101 prior to excavation and embankment operations. During winter construction, the

Contractor shall remove all ice and snow from an area just prior to excavation or embankment construction operations.

The Contractor shall not begin excavation operations on any area until the necessary cross-sections have been identified and the necessary construction limits and grades have been established to the satisfaction of the Engineer. No excavating shall be performed beyond the elevations, slopes, and limits established, without approval of the Engineer.

The Contractor shall schedule and conduct erosion control operations according to 1717.2.

The Contractor shall maintain all excavations and embankments in a well drained condition at all times. The Contractor shall install planned drainage facilities concurrently with the embankment construction, temporarily crown grades to minimize infiltration, and install temporary drainage facilities as directed by the Engineer. No material shall be stockpiled in a manner that will restrict surface drainage.

If the Contractor interrupts existing surface drainage, sewers, or subsurface drainage, the Contractor shall, at no expense to the Department, provide and maintain temporary drainage facilities as approved by the Engineer until permanent facilities are completed and operative.

B Preparation of Embankment Foundation

Before placing embankment on an existing slope steeper than 1 vertical to 4 horizontal, the Contractor shall either:

(a) Flatten the existing slope to the extent that it will not be steeper than 1 vertical to 4 horizontal; or

(b) Construct steps in the slope, with the back surface being as nearly vertical as practicable and with the horizontal cuts being made as close together as the slope permits, but with no step being less than 300 mm (**12 inches**) in width. All work required by these provisions is incidental work for which no direct compensation will be made.

Before placing any embankment 1 m (**3 feet**) or less in height, all soil that the Engineer considers unsuitable for use in the upper 1 m (**3 feet**) of the roadbed shall be removed from the area between the shoulder lines and disposed of as hereinafter provided.

Where embankment is to be constructed over swamp or marsh areas or at other locations where the foundation material is unstable, the foundation shall be excavated to remove unstable material as indicated in the Plans or as directed by the Engineer. Where non-granular soils are to be used for excavation backfill and embankments, the foundation area shall be free of standing water. No direct compensation will be made for removing such water from the excavation.

Wherever practicable, the foundations for all embankments shall be compacted between the shoulder lines by a tamping roller. Four passes shall be made on each strip the width of the roller. Other rollers may be used with permission of the Engineer. No direct compensation will be made for compacting the embankment foundations.

Before placing embankment over an old road, the Contractor shall remove any surfacing and excavate the old road core to an elevation 300 mm (**12 inches**) below subgrade, unless a greater depth is required by the Plans.

Before backfilling depressions within the roadway caused by the removal of foundations, basements, and other structures, the Contractor shall enlarge the depressions as directed by the Engineer.

C Excavating Operations

All excavations shall be made in conformity with the lines, grades, and slopes indicated by the Engineer and as the Engineer may otherwise direct, based on the typical section and elevation controls shown in the Contract. Any excavating performed beyond the limits described that was not authorized or ordered by the Engineer will be considered to be unauthorized work.

Excavations below final grade, for the purpose of removing unstable foundation materials or removing materials that are considered unsuitable for use in the upper portion of the roadbed, shall be conducted with the understanding that the excavation limits will be subject to change as the actual subsurface conditions are disclosed. Where granular material is used, seepage trenches shall be excavated for drainage as directed by the Engineer.

Excavations in rock shall be made to secure uniformity of grade and cross-section. All rock outcroppings shall be removed from within the slope lines and above the elevations shown in the Plans. All loosened material shall be removed from the backslopes. Roadbed excavating shall be conducted to provide drainage to the shoulder slopes and not to leave depressions that cannot be drained. Unless otherwise specified, presplitting will be required for all rock backslopes steeper than 1:1 in hard rock types such as igneous, metamorphic, and carbonates.

Blasting operations shall be controlled to produce a shattering effect on the rock that will not throw the material out of the excavation areas. The "coyote" method of blasting will not be permitted. Any rock blasted away from the excavation and embankment areas shall be recovered as directed. If seismic methods are used to monitor blasting, a record shall be furnished to the Engineer.

D Disposition of Excavated Material

Excavated materials should be utilized, to the fullest extent practicable and so far as the material is suitable, for construction of the embankments or as otherwise indicated in the Plans. Each layer of the roadbed shall be constructed of uniform material. When excavation operations disclose the presence of different types of soil, the Contractor shall select the different materials and place them in the embankments or as otherwise allowed within these provisions. In general, when granular materials are uncovered, they shall be placed in the uppermost portion of the embankment. Granular material shall not be removed from the Project without the written approval of the Engineer.

When the soils are so varied that selection and placement of uniform soils is not practical, the Contractor shall use disks, plows, graders or other equipment to blend and mix suitable soils to produce a uniform soil texture, moisture content, and density; except that, all soils that contain 20 percent or more particles passing the 75 µm (**#200**)

sieve shall be blended, mixed, and dried with a disk, within the entire upper 2 meters (**6 feet**) of embankment. The disk shall meet the requirements of 2123.3N, Disk Harrow. A disk is also to be used below the upper 2 meters (**6 feet**) of the embankment fill area if, in the opinion of the Engineer, the Contractor is not producing a uniform soil texture. No capping of granular materials with nongranular materials will be permitted at or within 300 mm (**12 inches**) of the subgrade surface. In the event that the Engineer orders the Contractor to select materials to an extent greater than could be normally expected with the loading and hauling method employed by the Contractor, any additional costs incurred by the Contractor will be compensated for as Extra Work.

The Contractor shall remove the inplace slope dressing, store it in locations selected by the Contractor, and use it for slope dressing at locations and to the minimum depths shown in the Plans. Peat, muskeg, and other unstable materials that are not to be used in the roadbed embankments shall be deposited in the areas indicated in the Plans or elsewhere as approved by the Engineer. All other material, that is considered unsuitable for use in the upper portion of the roadbed shall be placed outside of a 1:1 slope down and outward from the shoulder lines on fills under 10 m (**30 feet**) in height or outside of a 1 vertical to 1.5 horizontal slope down and outward from shoulder lines on fills over 10 m (**30 feet**) in height, or used to flatten the embankment slopes, or disposed of elsewhere as approved by the Engineer.

If no other disposition is specified, the excavated materials in channels outside of the roadway construction limits shall be used to fill abandoned portions of the channels and any remaining material shall be deposited in spoil banks or elsewhere as approved by the Engineer. Spoil banks shall be properly shaped and shall be provided with sufficient openings to permit natural drainage from adjoining property. Any excavated slope dressing material, shall be used to cover the other fill material.

Snow, ice and frozen lumps exceeding 150 mm (**6 inches**) in greatest dimension will not be permitted in the roadbed embankments. Sod and frozen lumps less than 150 mm (**6 inches**) in greatest dimension may be placed only in that portion of the embankment which is outside of a 1:1 slope down and outward from the shoulder lines, but not over or adjacent to structures.

The maximum particle size for stones, concrete and bituminous fragments in the roadbed embankment shall be as shown in Table 2106-1

Table 2106-1

Depth from Grading Grade	**Max. Stone Size**	**Maximum Concrete and Bituminous Particle Size**
< 150 mm **(6 inches)**	75 mm **(3 inches)**	75 mm **(3 inches)**
150 mm **(6 inches)** – 300 mm **(12 inches)**	150 mm **(6 inches)**	150 mm **(6 inches)**
300 mm **(12 inches)** – 1200 mm **(4 feet)**	250 mm **(10 inches)**	250 mm **(10 inches)**
> 1200 mm **(4 feet)** **(1)**	300 mm **(12 inches)**	300 mm **(12 inches)**
Within 500 mm **(20 inches)** of a Structure	75 mm **(3 inches)**	75 mm **(3 inches)**
Areas Where Piling is to be Placed	150 mm **(6 inches)**	150 mm **(6 inches)**

(1) Stones and concrete fragments larger than 300 mm (**12 inches**) and less than 600 mm (**24 inches**) in greatest dimension may be placed in the roadbed embankment only as provided in 2106.3E (3). No stones or broken concrete

fragments exceeding 600 mm (**24 inches**) in greatest dimension will be permitted in the roadbed embankment, except that larger stones may be placed outside of the shoulder lines but not within the median area of a roadway.

All noncombustible materials other than soils (oversized rock, broken concrete, metals, etc.) shall be disposed of in accordance with 2104.3C.

All surplus excavated soils and rock that are not wasted, stockpiled, or otherwise disposed of as specifically allowed or required by the Contract shall become the property of the Contractor and shall be disposed of by the Contractor outside of the Project limits in accordance with a satisfactory Disposal Plan. This disposal plan shall constitute the Contractor's proposal for acceptable disposition of surplus materials outside of the Project limits in compliance with applicable environmental regulations, permit requirements, and any requirements or limitations imposed by the Contract. A satisfactory Disposal Plan shall be submitted to the Engineer prior to starting the disposal operations.

Whenever disposal sites are indicated in the Contract, whether on or off the Project, they are to be considered as being possible sites with the Contractor having the option of choosing other sites after award of the Contract under the disposal plan provisions, except in cases where mandatory disposition is intended.

E Placing Embankments

Roadbed embankments shall not be constructed during periods when the embankment material freezes while being placed and compacted, nor shall any embankment material be placed on soil that is frozen to a depth greater than 100 mm (**4 inches**). Where the foundation soil is frozen to a depth exceeding 100 mm (**4 inches**), at a time when weather conditions are such that embankment construction could be continued without the material freezing as it is being placed and compacted, the Contractor may be permitted to excavate the frozen foundation soil and proceed with the embankment construction for so long as the weather will permit, but only if and to the extent approved by the Engineer, and with the understanding that the additional costs involved shall be borne by the Contractor. The frozen soil shall be wasted and replaced with other suitable soil as may be necessary to construct the embankments as specified.

Excavations below subgrade, together with any seepage trenches excavated to provide drainage, shall be backfilled in accordance with the requirements for embankment construction and with the material specified in the Contract, or with suitable materials obtained from the excavations if no other material is specified.

Before backfilling roadbed subcuts that are 750 mm (**30 inches**) or less in depth, the upper 150 mm (**6 inches**) of soil below the bottom of the excavation shall be compacted to 95 percent of maximum density. If compaction cannot be achieved due to the in-situ soils, any equipment or methods required to stabilize the in-situ soils shall be paid as Extra Work.

Embankment material shall be deposited and spread in relatively uniform layers approximately parallel to the profile grade, and extending over the full width of the embankment. Earth moving equipment shall be routed evenly over the entire width of the roadway being constructed. Embankment widening construction shall proceed from the toe of the proposed slope inward toward the existing fill slope. Layers in the upper 1

m (**3 feet)** of the roadbed shall not be more than 200 mm (**8 inches**) in thickness (loose measurement) and those below the upper 1 m (**3 feet**) shall be not more than 300 mm (**12 inches**) in thickness (loose measurement), except under the following conditions:

(1) Where the foundation for the embankment (or backfill) is under water or is so unstable that it will not support the hauling equipment without appreciable displacement of the underlying soils, the embankment thereon may be constructed as one layer up to the lowest elevation at which the hauling equipment can operate over it without causing intrusion of the underlying soils into the upper 200 mm (**8 inches**) of the embankment so placed, but in no case shall the top of that layer be less than 1 m (**3 feet)** below the subgrade. The top of that layer shall be compacted to the satisfaction of the Engineer before any additional material is placed thereon.

(2) When the embankment material is of a granular nature, not more than 20 percent of which will pass a 75 µm (**#200**) sieve, the thickness of the layers in the upper 1 m (**3 feet**)) of the roadbed may be increased to not more than 300 mm (**12 inches**) provided compaction is obtained by an approved compactor.

(3) When the embankment material consists of 20 percent or more by total volume of stones and concrete fragments larger than 300 mm (**12 inches**) and less than 600 mm (**24 inches**) in greatest dimension which cannot be compacted utilizing standard compaction processes, that material may only be placed in the portion of the roadbed embankment lower than 1200 mm (**4 feet**) from the top of the subgrade, in layers not to exceed 600 mm (**24 inches**) in thickness. The Contractor shall utilize special placement methods as approved by the Engineer to mix and incorporate other acceptable embankment materials with the stones and concrete fragments of the size shown above so the composite embankment of smaller and larger particles is well consolidated and the voids between the larger particles are generally filled with smaller particles.

(4) Except as otherwise permitted in (2) above, embankment materials placed adjacent to structures within the roadbed shall be placed in layers not more than 200 mm (**8 inches**) in loose thickness, for a distance of at least 15 m (**50 feet**) on each side of pipes 1200 mm (**4 feet**) or less in diameter and 30 m (**100 feet**) on each side of other structures, and for the full height from the embankment foundation to the top elevation of the structure.

(5) Except as may be necessary to obtain satisfactory compaction, layer construction will not be required in constructing such items as ditch blocks and entrances where the use of conventional equipment is impractical, nor in constructing such items as channel fills, spoil banks, and berms that do not provide foundation support for structural items.

(6) Granular Materials (3149.2B) which are excavated below the water surface or table shall not be placed on embankment soils if the water content of the excavated material, in the Engineer's opinion, is causing saturation of the previously placed embankment soils and resulting in the loss of stability and density of these soils.

Each layer consisting predominantly of rock or broken concrete shall be leveled prior to placing the next layer thereon, using suitable equipment operated in a manner that will provide even distribution of the larger rock or broken concrete and fill the voids with finer material to form a compact mass.

If, at any time prior to or during construction, the Engineer determines that it is necessary to resort to a surcharge, the Contractor shall construct the embankment as directed by the Engineer. The surcharge shall continue until the Engineer considers that satisfactory subsidence has been obtained. If, at any time during the construction, the Engineer considers it necessary, the Contractor shall excavate relief trenches as directed by the Engineer adjacent to the toes of the embankment, and backfill them as required.

The Department reserves the right to install settlement plates within the approach embankments at any bridge site as well as in other embankment areas, together with measurement control points outside the embankments, all in such locations and numbers as the Engineer deems necessary to determine the stability of the embankments. The Contractor's operations shall not disturb such installations. Any settlement plates damaged or destroyed by the Contractor's operations shall be replaced at no expense to the Department. No compensation in addition to Contract prices will be made to the Contractor for any inconvenience or expense incurred as a result of these settlement plate installations.

At a time designated by the Engineer, the Contractor shall complete the embankment by adding more material or removing any excess. After satisfactory settlement of the embankment has been obtained and the slopes have been roughly finished, the excavated material temporarily deposited outside the embankment slopes shall be disposed of as shown in the Plans or as approved by the Engineer.

If embankment surcharge is ordered to achieve subsidence, in the absence of Contract provisions requiring the same, any equipment movement required thereby that would not otherwise be necessary will be compensated for as Extra Work. Unless otherwise specified, removal of excess materials deposited by order of the Engineer will be paid for as Extra Work to the extent the removal is ordered by the Engineer.

Before any embankment is placed behind abutments that support steel superstructures, the Contractor shall place temporary hardwood wedges, as directed by the Engineer, between the superstructure and abutment parapets. These wedges shall be removed when, in the opinion of the Engineer, satisfactory settlement of the embankment has been secured.

When the design of a structure is such that the strength of the substructure is dependent upon the restraining effect of the superstructure, the abutting embankment shall not be constructed until the superstructure has been completed to the extent necessary to provide the required restraint.

F Compacting Embankments

The rate of depositing material on the embankment shall not exceed the capacity of the leveling and compaction equipment. Compaction of this material should not be delayed after being placed.

Rollers shall be used to compact the embankment materials in totality (area, layers, etc.). The type of roller(s) used for compaction shall be sufficient to meet the density requirements, as specified. The minimum size, gross weight, and applied pressure exerted by the roller(s) shall be in accordance with the equipment requirements specified under 2123.

The use of equipment to haul material (trucks, carryalls, scrapers, etc.) shall not be considered in lieu of the specified compaction equipment. Construction traffic from such hauling equipment shall be distributed uniformly over the entire embankment to the maximum extent possible. All roadbed embankment material shall be compacted as required herein for the Specified Density Method, except as otherwise provided for specific materials or portions of embankments.

Materials placed outside of a 1 vertical to 1.5 horizontal slope down and outward from the grading shoulder PI (point of intersection) on fills over 10 m (**30 feet**) in height, or outside of a 1:1 slope down and outward from the grading shoulder PI on fills of 10 m (**30 feet**) or less in height, will not be subject to the specified density requirements but shall be compacted to the satisfaction of the Engineer.

Mechanical compaction will not be required on those portions of the embankment that are constructed with material consisting predominantly of stone or rock fragments, nor in conjunction with placement of slope dressing or roadside grading involving the filling of channels and depressions where acceptable consolidation is obtained with the grading equipment.

Density control shall not apply to waste materials (peat, muskeg, etc.) nor to any other non-rock material utilized for incidental drainage or landscape filling outside the roadbed embankment. However, such materials shall be consolidated to the satisfaction of the Engineer.

F1 Specified Density Method

Where this method is specified, the Engineer will sample and test the soils that are to be used, to determine the maximum density and Optimum Moisture, and will make density and moisture tests on the compacted embankment, using methods described in the Mn/DOT Grading and Base Manual.

The upper 1 m (**3 feet**) of the embankment, together with those portions of the embankment that are below the upper 1 m (**3 feet**) but that are adjacent to structures and are subject to the same maximum layer thickness as the upper 1 m (**3 feet**), shall be compacted to a density of not less than 100 percent of maximum density. Those portions of the embankment that are below the upper 1 m (**3 feet**) and that are not adjacent to structures shall be compacted to a density of not less than 95 percent of maximum density.

At the time of compaction, the moisture content of the embankment material shall be not less than 65 percent nor more than 115 percent of Optimum Moisture where 95 percent of maximum density is required and shall be not less than 65 percent nor more than 102 percent of Optimum Moisture where 100 percent of maximum density is required.

F2 Quality Compaction (Visual Inspection) Method

When this method is specified, the equipment used in constructing the embankment shall meet 2123 and each layer of embankment material shall be compacted until there is no evidence of further consolidation. Embankment construction shall not continue when, in the opinion of the Engineer, the existing soil moisture content does not allow proper compaction.

The Engineer may elect to perform moisture and density tests as shown in the Mn/DOT Grading and Base Manual, as needed to assist Visual Inspection. The actual density or moisture obtained by testing the road embankment must meet or exceed the requirements shown in 2106.3F1 Specified Density of the Standard Specifications in order to be acceptable.

Compaction shall be obtained with a tamping roller or an approved type of vibratory compactor, except as otherwise provided for specific materials and portions of the embankments.

In plastic soils, pneumatic-tired, steel-wheeled, or grid rollers may be used for compacting embankment layers 75 mm (**3 inches**) or less in loose thickness or for compacting the upper 75 mm (**3 inches**) of thicker layers where a tamping roller will not produce an increase in density. In nonplastic soils, pneumatic-tired, steel-wheeled, or grid rollers may be used for compacting layers of 200 mm (**8 inches**) or less in loose thickness.

Compaction shall be obtained with special compacting equipment or by hand tamping methods where the use of conventional rollers is not feasible.

G Finishing Operations

All excavation, embankment and roadside areas involved in or disturbed by the construction shall be finished in reasonably close conformity with the established lines and grades, including any tolerances specified. The subgrade shall be finished and maintained as required by the applicable provisions of 2112.3. When compaction was obtained by the quality compaction method, the final shaping of the roadbed shall be done when, in the opinion of the Engineer, the moisture content of the upper portion of the roadbed is suitable for that work. If necessary, in conjunction with the final shaping, the Contractor shall, at no expense to the Department, scarify the roadbed to a depth of 150 mm (**6 inches**) and recompact it.

In conjunction with the final subgrade finishing operations, the upper portion of a granular subgrade shall be stabilized by incorporation of stabilizing aggregate if necessary to achieve satisfactory surface stability as determined by the Engineer. The aggregate shall be spread to the depth and width shown in the Plans or as needed and shall be mixed (if required) with the subgrade to the extent that stability is best achieved. After incorporation of the aggregate, the subgrade shall be recompacted and shaped to produce a stable surface meeting the specified surface tolerances. When the material needing stabilization was obtained by the Contractor from outside the Project limits as an embankment material item, the furnishing and placing of stabilizing aggregate shall be at no expense to the Department. Otherwise, this work will be compensated for under the item "stabilizing aggregate", or as Extra Work in the absence of a Contract item therefore.

Earthwork finishing and slope dressing operations shall be conducted concurrently with the grading operations so as to permit prosecution and completion of erosion control items at the earliest practicable time. Slope Dressing operations shall be carried out as soon as possible after the subsoil has been finished to grade on any significant area. At the time the slope dressing is placed, the subsoil shall be in a loose, friable condition for a uniform depth of at least 75 mm (**3** inches), and there shall be no erosion rills or washouts in the subsoil surface exceeding 75 mm (**3 inches**) in depth. To achieve this condition scarification of the subsoil will be required as directed by the Engineer, wherever the subsoil has been compacted by equipment operation or has become dried out and crusted, and where necessary to obliterate erosion rills.

Subsoiling shall be required to reduce soil compaction in all areas where subsoiling is shown on the Plan. Subsoiling shall be performed by the prime or excavating contractor and shall occur after slope dressing placement. If subsoiling operations bring to the surface materials that are unacceptable to the Engineer, then additional work necessary to restore the area to acceptable conditions shall be compensated as Extra Work.

The Contractor shall schedule a 15 meter (**50 foot**), two directional test and demonstrate competence to the Engineer prior to continuing operations. The Engineer shall identify the test area. Subsoiled areas shall be loosened to less than 1400 kPa (**200 psi**) to a depth of 500 mm (**20 inches**) of the inplace and top soil. When directed by the Engineer, the Contractor shall verify that the subsoiling work conforms to the specified depth. To test for conformance, the Contractor shall use a cone penetrometer that meets standard ASAE Soil Testing Specifications of a 20 mm (**13/16 inch**) insertion rate per second.

After obtaining approval by the Engineer that the equipment and methods are sufficient to perform the work, the Contractor may proceed and complete the subsoiling operation. Work done without the Engineers approval will be considered as unauthorized work.

Subsoiling shall form a two-directional (90º) grid . Channels shall be created by a commercially available, multi-shanked, parallelogram implement attached to track-type equipment. The equipment shall be capable of exerting a penetration force necessary for the site. No disc cultivators, chisel plows, or spring-loaded equipment will be allowed. The grid channels shall be spaced a minimum of 300 mm (**12 inches**) to a maximum of 910 mm (**36 inches**) apart, depending on equipment, site conditions, and the Plan. The channel depth shall be a minimum of 500 mm (**20 inches**) or as specified in the Plan. If soils are saturated, the Contractor shall delay operations until the soil dries to field capacity or less.

Only one pass shall be performed on erodible slopes greater than 1 vertical to 3 horizontal. Work shall be at right angles to the direction of surface drainage, whenever practical. Exceptions to subsoiling include areas within the dripline of any existing trees, over utility installations within 750 mm (**30 inches**) of the surface, where trenching/drainage lines are installed, where compaction is by design (abutments, footings, or inslopes), and inaccessible slopes, as approved by the Engineer. In cases where exceptions occur, the Contractor shall observe a minimum setback, as directed by the Engineer.

Those portions of an old road that are abandoned, which are outside the grading areas, shall be graded and finished to an acceptable contour that blends with the adjoining

terrain. On all areas where an old roadbed or temporary haul road have been located, and are to receive turf, the existing soils and granular material shall be removed and replaced and/or subsoiled to provide not less than 500 mm (**20 inches**) of loose, friable soil below the finished surface. All structural material including granular, shall be removed. Any temporary haul removal costs will be incidental to the Project. Removed material may be disposed of off the Project site or recycled on the Project if approved by the Engineer.

All depressions resulting from structure removals, debris burying, grubbing operations, and other causes, shall be backfilled with suitable material to the designated contour and so as to conform with any pertinent requirements.

All work involved in the finishing operations, as specified herein and as otherwise required by the Contract, shall be compensated for as part of the payment for Contract items covering excavation, removals, or the furnishing of material.

2106.4 Method of Measurement

The Department will determine quantities for excavation and embankment according to 1901 as modified by these provisions.

A Excavation Material

The Department will determine the quantities by excavated volume of the excavation material in its original position. Volumes will be computed by the average end area method determined from original and final cross-sections.

In excavations classified as rock, the measurement will include a volume allowance for overbreakage if the plane of the bottom of the excavation falls within a layer or stratum of rock. Unless other limits are shown on the typical grading sections, measurements will include a 150 mm (**6 inches**) overbreak allowance outside the grading section as indicated, with the exception that 500 mm (**20 inches**) (measured horizontally) will be allowed outside of backslopes in hard rock types where pre-splitting is not required. No overbreak allowance will be made for pre-split backslopes.

The Engineer will determine the actual limits between different material classifications by field measurements during construction as true elevations are disclosed. If any changes are made in the Plan grading sections or grades that affect the excavation limits as indicated in the Contract, measurements will be taken as necessary to establish the actual limits of excavation. Where slope dressing is required, measurements will be taken on the finished surface after placement of the slope dressing, and a quantity allowance will be made equal to the thickness of slope dressing placed. In excavations made below finished grade, the limits of excavation measurement will be as defined by the grades and slope lines, unless actual field measurements are taken.

The Contractor may dispute the Contract excavation and embankment quantities designated in the Plan. The Contractor is responsible for notification to the owner pertaining to Contract quantity disputes for excavation and embankment activities. A claim for compensation or time extension in regard to excavation and embankment activities will be rejected, either partially or entirely, if the Contractor cannot prove the following:

- The magnitude of the dispute exceeds normal variations for earthwork items.
- The owner was given reasonable opportunity to monitor Contract impacts resulting from quantity claims for compensation or time extension.

The limits for determination of quantities will be defined by the cross-sections. The limits for quantity determinations will not extend beyond the authorized grading sections, except for the allowances specified. Quantity deductions will be determined by actual or fixed dimensions to exclude materials encompassed by the excavation measurements that are to be removed under other Contract items. Excavation and embankment quantities, will be recomputed or otherwise adjusted on the basis of actual limits as measured or otherwise fixed, and payment for the applicable items will be made as altered thereby.

B Embankment Material

The Engineer will measure embankment material by volume according to 1901 and as specified in the Contract as Compacted Volume (CV). Only those materials accepted for use on the Project will be measured for payment under the embankment material items.

C Blank

D Stabilizing Aggregate

The Engineer will measure stabilizing aggregate according to 1901 by compacted volume (CV) as furnished and incorporated into the subgrade.

E Subsoiling

The Engineer will measure subsoiling according to 1901 by area field measurement.

2106.5 Basis of Payment

Payment for the accepted quantities of stabilizing aggregate at the Contract prices per unit of measure will be compensation in full for furnishing and placing the material as specified, including final finishing operations.

When the Contractor is required to obtain embankment material from a source specifically stipulated in the Contract, any required incidental pit excavation (stripping, waste, etc.) will be compensated for separately, or as Extra Work in the absence of such payment provisions.

Payment for the accepted quantities of the following Excavation Items at the Contract Unit Price per cubic meter [**cubic yard**] will be compensation in full for all costs of scalping and preparing the excavation and embankment construction areas; of excavating, loading, and hauling the excavated material needed for the specified embankment construction; or of hauling and disposing of materials not needed or unsuitable for the embankment construction. No direct compensation will be made for the costs associated with the temporary stockpiling of material on the Project or construction of temporary access roads.

Payment for the accepted quantities of the following Embankment Items at the Contract Unit Price per cubic meter [**cubic yard**] (CV) will be compensation in full for all costs of constructing the embankment as specified in the Plans including the placing, compacting and finishing of materials from the roadway excavation and/or furnishing,

hauling, placing, compacting and finishing materials obtained from off the Project that may be needed to supplement the available embankment material from the Project excavation. No direct compensation will be made for water used in conjunction with the mixing, placing, and compacting operation; construction of temporary access roads; or any incidental pit stripping, waste excavation, clearing and grubbing, slope dressing, pit shaping, seeding or other expenses incurred in supplying grading material from off the Project.

Extra Work compensation will be provided for the removal and disposal of any debris encountered in the excavations to the extent that its existence was not known to the Contractor at the time of bidding, and then only when its satisfactory removal and disposition requires separate handling or the use of special equipment.

Compensation for roadway excavation items will include any increased haul costs not qualifying for Extra Work compensation or bid price adjustment in consideration of 1402.

If the Proposal fails to include a bid item for Excavation – Rock and material is uncovered that is so classified, excavation of the rock will be paid for separately at the Contract price for Excavation – Common, plus an additional $26.00 per cubic meter (**$20.00 per cubic yard**). Such stipulated prices for rock excavation will apply up to a maximum of 200 m3 (**260 cubic yards**) of excavation per item or to such quantity as may be performed by mutual consent prior to execution of an Extra Work agreement.

If any Excavation - Muck in addition to that indicated in the Plans is required by the Engineer, when payment is made on the basis of excavation volumes, the increased quantity will not be considered as a basis of claim for increased compensation, except as provided by the following:

a) That portion of the additional excavation that is removed from below a plane parallel to and 5 m (**15 feet**) below the natural ground surface will be measured in 2 m (**5 foot**) depth zone increments and paid for separately at adjusted unit prices. The adjusted unit price will be equal to the Contract bid price for Excavation - Muck plus $0.39 per cubic meter (**$0.30 per cubic yard**) for the additional excavation within the 5-7 m (**15-20 foot**) depth zone and an additional $0.26 per cubic meter (**$0.20 per cubic yard**) for each additional 2 m (**5 foot**) increment of depth beyond 7 m (**20 feet**).

b) If any portion of the additional excavated material in excess of 10% of the planned quantity should be required to be placed in a disposal area other than shown or described for the planned excavation, any additional costs incurred will be compensated for as Extra Work.

The adjusted unit prices specified above for Excavation – Muck will be compensation in full for all additional costs incurred in excavating to depths greater than planned, in finishing the additional disposal quantities and areas, and in rehandling any materials deposited within the extended excavation limits. Payment at the Contract price will include full compensation for all pumping and dewatering specifically required, for all rehandling and hauling of the excavated material that is necessary for its disposal, and for all finishing of the disposal areas.

Partial payments will be subject to withholding of a portion of the Contract amount to cover the reasonable value of any uncompleted operations that are designated as a part

of the complete unit. The amounts so withheld will be based upon the estimated surface area exposed to probable erosion without the required surface finishing and turf establishment operations being completed.

All areas within the grading construction limits, exclusive of roadbed areas, on which the natural vegetation has been rendered ineffective by the grading or grubbing operations, will be considered as being exposed to probable erosion until such time that the final surface finishing and turf establishment operations have been completed.

The amounts to be withheld on each partial estimate will be the product of $7413.00 per hectare (**$3000.00 per acre**), unless otherwise stated in the Contract, and the estimated number of unfinished hectares (**acres**) exposed to probable erosion at the time the estimate is prepared. This withholding will apply to the entire Project or to any area, as determined by the Engineer.

For application and release purposes, the Project may be divided into separate control areas based on earthwork balance points, drainage area boundaries, or roadway segments as indicated in the Contract or as otherwise deemed appropriate by the Engineer.

Upon completion of the rough grading operations and placement of slope dressing in each control area, the amount withheld for that area will be reduced by 50 percent. Once mulch has been placed, the amount will be reduced by an additional 30 percent. Full release of the amount withheld will be made when the seeding has been accepted.

Whenever the possibility for erosion damage or water pollution exists, release of withheld amounts will not be made for a control area until adequate temporary or permanent erosion control measures have been provided.

Payment for excavation and embankment construction will be made on the basis of the following schedule:

Item No.	Item	Unit
2106.605	Subsoiling	(**acre**)
2106.607	Excavation – Common	(**cubic yard**)
2106.607	Excavation – Subgrade	(**cubic yard**)
2106.607	Excavation – Muck	(**cubic yard**)
2106.607	Excavation – Rock	(**cubic yard**)
2106.607	Common Embankment (CV)	(**cubic yard**)
2106.607	Granular Embankment (CV)	(**cubic yard**)
2106.607	Select Granular Embankment (CV)	(**cubic yard**)
2106.607	Select Granular Embankment Modified 10% (CV)	(**cubic yard**)
2106.607	Granular Embankment – Muck (CV)	(**cubic yard**)
2106.607	Select Granular Embankment – Muck (CV)	(**cubic yard**)
2106.607	Stabilizing Aggregate	(**cubic yard**)

The full provisions of 1903 shall apply to all 2106 pay items with the exception of all Excavation and Embankment pay items. Standard Specification 1903 is modified for the Excavation and Embankment pay items included with the 2106 Excavation and Embankment specification to the extent that any references to 75 percent shall be construed to read 90 percent and any references to 125 percent shall be construed to read 110 percent.

The Contractor is hereby advised that there may be some slightly contaminated material in the T.H. 13 median as identified on Sheet No. 91 of the Plan. All encountered contaminated material shall be stockpiled on Mn/DOT Right of Way for use for common embankment later in the project construction. The placement of all stockpiled contaminated material shall be placed entirely on Mn/DOT Right of Way.

S-67 (2123) STREET SWEEPER (WITH PICKUP BROOM)

This work shall consist of removing aggregate and soil sediments from paved portions of the project, or adjacent roadways, open to the traveling public.

Removal shall be accomplished with self-propelled street sweeping equipment. All materials shall be collected and retained within the sweeping equipment as they are swept. Disposal of the swept material shall be in accordance with Mn/DOT 2104.3C.

Sweeping shall be accomplished as directed by the Engineer and in accordance with any applicable permits obtained for the construction of the project. The Contractor shall have the responsibility to inform the project engineer, or designated representative, of any roadways within or adjacent to the project which are experiencing aggregate or soil deposits due to the project construction activities.

S-67.1 The need for roadway sweeping and cleaning is directly related to the construction activities being performed on the project. At times sweeping and cleaning operations may be needed on a daily basis and other times less frequent needs will exist. When appropriate, a sweeping and cleaning schedule may be developed to ensure adequate debris removal from the roadways on a timely basis.

S-67.2 Roadway sweeping and cleaning shall commence at the times agreed to in a sweeping and cleaning schedule, if one is developed, or within two hours of the project engineer's (or designated representative) order to perform sweeping and cleaning activities. Failure to perform sweeping and cleaning activities in accordance with all applicable permits and as directed by the Engineer will result in the assessment of non-compliance charges. Non-compliance charges, for each separate incident, will be assessed at an hourly rate equal to $100.00 per hour each hour or any portion thereof which the Engineer determines that the Contractor has not complied.

S-67.3 The method of measurement and basis of payment for Item Street Sweeper (with Pickup Broom) shall be by the hour for the actual time spent sweeping the project roadways or adjacent streets as directed by the Engineer. Payment for additional sweeping ordered by the Engineer will be made as specified in **Section S-18 (1514) Maintenance During Construction**.

S-67.4 Payment by the hour, as measured to the nearest one-half hour, shall be compensation in full for all costs incidental thereto, including but not limited to labor, equipment, water

and debris disposal. No additional compensation shall be paid for overtime labor which may be required to complete all necessary sweeping.

S-67.5 Payment in **Section S-18 (1514) Maintenance During Construction** will only be for those hours of sweeping necessary to keep the project roadways and adjacent roadways clean from construction debris as ordered by the Engineer. No payment will be made for sweeping normally required to construct the project as specified; such as between bituminous lifts, prior to bridge deck low slump overlays, prior to curb and gutter construction on bituminous base, prior to placement of traffic markings, etc. No payment will be made under this item for sweeping done by "kickoff brooms".

S-68 (2130) APPLICATION OF WATER

The provisions of Mn/DOT 2130 shall govern except as modified below:

The following paragraph is hereby added to the requirements of Mn/DOT 2130.2:

Water can be metered and purchased at residential rates at hydrants designated by the City of Burnsville.

S-69 (2211) AGGREGATE BASE

Aggregate base courses shall be constructed in accordance with the provisions of Mn/DOT 2211 except as modified below:

S-69.1 The second sentence in Mn/DOT 2211.1 Description, is revised to read as follows:

The aggregate base shall be produced and placed under the Contractor's quality control program in accordance with the Mn/DOT Grading and Base Manual.

S-69.2 Compaction shall be achieved by the "Quality Compaction Method" described in Mn/DOT 2211.3C.

The last paragraph in Mn/DOT 2211.3C2 Quality Compaction Method, is revised to read as follows:

The Engineer may elect to perform density tests as shown in the Mn/DOT Grading and Base Manual, as needed to assist inspection. The actual density obtained by testing the aggregate base must meet or exceed the requirements shown in 2211.3C1 Specified Density or 2211.3C3 Penetration Index Method in order to be acceptable.

S-69.3 The requirements of 2211.3C2 are hereby modified to the extent that:

For all stages of aggregate base placement and spreading, One self-propelled Pneumatic Tired Roller and One self-propelled Steel-Wheeled Roller are required. The Pneumatic Tired Roller shall exert a pressure of not less than 200 pounds per inch of rolling width. The roller shall have a minimum of seven tires. The Steel-Wheeled Roller shall weigh not less than 8 tons, shall exert a pressure on the rear drum of not less than 250 pounds per linear inch, and shall operate at a frequency of 8 to 10 impacts per foot. The rollers shall, as practicable, be operated continuously so all areas are thoroughly compacted to the required density, as the aggregate base is being placed and spread.

S-69.4 The first sentence in Mn/DOT 2211.3F1 Gradation Control, is revised to read as follows:

The Contractor and/or aggregate producer shall be responsible for maintaining a gradation control program in accordance with the random sampling acceptance method described in the Mn/DOT Grading and Base Manual.

S-69.5 Mn/DOT 2211.3F2(d) under Acceptance Testing is hereby deleted and replaced with the following:

(d) Samples for gradation testing will be taken randomly by the Engineer prior to compaction, in accordance with the random sampling method described in the Grading and Base Manual. All gradation tests will be reported to the nearest whole number, except the 75µ [#200] sieve will be reported to the nearest one tenth of one percent (0.1%).

S-69.6 Mn/DOT 2211.3F2(j) under Acceptance Testing, is revised to read as follows:

(j) One gradation sample will be taken from each sublot and tested. Payment will be based on the average results from the four sublot samples for each specified sieve.

S-69.7 The following is added to Table 2211-C and Table 2211-D in Mn/DOT 2211.3F2 Acceptance Testing:

Substantial compliance will be applied to no more than one test failure. Substantial compliance will be eliminated when two or more test failures occur and test failures meeting substantial compliance will be subject to the next higher price reduction. One sieve failure = one test failure. Test failures for each material type will be treated separately.

S-70 (2221) AGGREGATE SHOULDERING

Aggregate shouldering courses shall be constructed in accordance with the provisions of Mn/DOT 2221 except as modified below:

S-70.1 Compaction shall be achieved by the "Quality Compaction Method" described in Mn/DOT 2211.3C.

S-70.2 The second sentence in Mn/DOT 2221.1 Description, is revised to read as follows:

The aggregate shouldering shall be produced and placed under the Contractor's quality control program in accordance with the Mn/DOT Grading and Base Manual.

S-70.3 The following is hereby inserted after the first paragraph of Mn/DOT 2221.3C Spreading and Compacting:

Water shall be applied to the shouldering material during the mixing and spreading operations so that at the time of compaction the moisture content is not less than 5 percent of the dry weight.

S-71 (2231) BITUMINOUS PATCHING MIXTURE

The provisions of Mn/DOT 2231 are supplemented with the following:

S-71.1 The bid price for this item shall be compensation in full for all costs of routing, cleaning, tack coating, paving and compacting severely deteriorated transverse and longitudinal

cracks prior to placing any overlays. The work shall be done in accordance with the Plan to the satisfaction of the Engineer.

S-71.2 The bituminous mixture shall meet the Wearing Course Mixture requirements of 2360 SPWEB340C.

S-71.3 Payment will be made under Item 2231.501 (Type SP 12.5 Bit. Mixture For Patching) at the Contract bid price per ton.

S-72 (2301) CONCRETE PAVEMENT

MnDOT 2301 shall be deleted and replaced with the following:

2301.1 DESCRIPTION

This work consists of constructing portland cement concrete pavement on a prepared base.

The Department defines paving concrete to include concrete mainline, ramps, loops, integrant curb, shoulders, and curb and gutter placed adjacent to the concrete mainline with the same mixture used in the paving. Integrant curb is a curb constructed monolithically with the pavement.

For the purposes of concrete pavement, the Department defines a concrete plant as the following:

(1) A paving plant using dump or agitator trucks to haul concrete, or

(2) A certified ready-mix plant using truck mixers to haul concrete.

For concrete pavement incentives and disincentives, the Department defines a concrete plant as the following:

(1) A primary concrete plant providing the majority of the concrete to a paving project, and

(2) A secondary concrete plant providing any minor work or fill-ins not provided by the primary concrete plant.

Only one primary concrete plant per project is allowed unless otherwise approved by the Engineer. The Contractor may use a paving plant or a certified ready-mix plant as the primary concrete plant.

2301.2 MATERIALS

A Concrete 2461

A.1 Slipform Placement ..... Mix No. 3A21

A.2 Fixed Form Placement ..... Mix No. 3A41

B Coarse and Fine Aggregate Requirements

Test each aggregate fraction proposed for use in accordance with Table 2301-1:

Table 2301-1 Aggregate Testing Requirements	
Aggregate	**Testing Required**
Tested by Department in the last 3 years	No additional testing *
Not tested by the Department in the last 3 years	Preliminary aggregate testing in accordance with 2301.3.B.1
New source	New source concrete aggregate testing in accordance with 3126 and 3137
* Perform additional testing as required by the Engineer in conjunction with the Concrete Engineer.	

B.1 Required Preliminary Aggregate Testing

After the Department awards the Contract and as soon as coarse and fine aggregates are available for testing, contact the Engineer to coordinate preliminary sampling of aggregate for concrete paving. The Engineer in conjunction with the Concrete Engineer will sample and test the aggregate to verify specific gravity, absorption data, and aggregate quality. The Department will perform other tests as determined necessary by the Engineer in conjunction with the Concrete Engineer.

B.2 Aggregate Alkali Silica Reactivity (ASR) Requirements for Concrete Mixes

The Department will test the designated fine aggregate for alkali silica reactivity (ASR) with Holcim, St. Genevieve, Type I/II portland cement and Lafarge, Davenport, Type I/II portland cement in accordance with ASTM C 1260 MnDOT Modified. If the fine aggregate contains an intermediate size aggregate such as “buckshot” or “pearock” as determined by the Concrete Engineer, the Department will perform testing in accordance with ASTM C 1260.

The Concrete Engineer, in coordination with the Engineer, will review the 14-day fine aggregate expansion test results to determine the acceptability of the proposed fine aggregate and cement combination in accordance with the 14-day fine aggregate expansion limits in Table 2301-2.

Table 2301-2 Fine Aggregate ASR Mitigation Requirements	
14-day Fine Aggregate Expansion Limits	
≤ 0.150	The Department will accept the fine aggregate with or without a mitigator
> 0.150 – 0.250	Mitigate the fine aggregate with 35 percent ground granulated blast furnace slag or at least 20 percent fly ash
> 0.250 – 0.300	Mitigate the fine aggregate with 35 percent ground granulated blast furnace slag or 30 percent fly ash in accordance with 3115, modified with at least 66.0 percent SiO_2 + Fe_2O_3 + Al_2O_3 on a dry weight basis and at least 38.0 percent SiO_2
> 0.300	The Department will reject the fine aggregate

For fine aggregate and cement combinations previously tested by the Department, the Concrete Engineer will use the previous test results to determine necessary mitigation. The Contractor may contact the Department to access the list of previously tested fine aggregate sources.

If the fine aggregate and cement combination were not previously tested, the Concrete Engineer will use the higher expansion result of the two fine aggregate and cement combinations to determine necessary mitigation.

Add "buckshot" or "pea rock as a separate aggregate in accordance with the quality requirements of 3137, except the Department will determine the shale content in accordance with AASHTO T 113 MnDOT Modified, "Lightweight Pieces in Aggregate" fine aggregate procedure. If this aggregate is from the same source as the ¾ in+ [19 mm+] or ¾ in– [19 mm–] aggregate, the Concrete Engineer will waive the requirements specified in 3137.2D3(c), "Carbonate in Class C aggregate by weight.". If this aggregate is from sources other than the ¾ in+ [19 mm+] or ¾ in– [19 mm–] aggregate, approval is at the discretion of the Concrete Engineer.

The Concrete Engineer may reject the fine aggregate if mortar bar specimens exhibit an indication of external or internal distress not represented by the expansion results. The Concrete Engineer will make the final acceptance of the aggregate.

C Cementitious Materials

Design the concrete paving mixes in accordance with the following requirements for cementitious material:

(1) Total alkalis no greater than 0.60 percent in the portland cement (Na_2O + 0.658 K_2O)
(2) Total alkalis no greater than 5.0 lb per cu. yd [3.0 kg per cu.m] in the combined cementitious material
(3) At least 530 lb per cu. yd [315 kg per cu. m] minimum cementitious,
(4) At least 400 lb per cu. yd [237 kg per cu. m] of portland cement when using fly ash or at least 385 lb per cu. yd [228 kg per cu. m] when using slag as a portland cement replacement,
(5) Provide additional cementitious material to meet requirements in accordance with this section at no additional cost to the Department,
(6) Total cementitious material no greater than 600 lb per cu. yd [356 kg per cu. m] except for high-early strength mixes.

The Department defines high-early strength concrete as concrete with a cementitious content of greater than 600 lb per cu. yd [356 kg per cu. m].

The Contractor may use 100 percent portland cement for the cementitious material for high-early mixes, except if using quartzite or gneiss coarse aggregate provide high-early mixes in accordance with 2301.2.C.1.

C.1 Special Cementitious Requirements for Quartzite and Gneiss

If providing coarse aggregate from sources identified by the Department as quartzite or gneiss and if the coarse aggregate does not meet the 0.04 percent expansion limit when tested in accordance with ASTM C 1293, replace the portland cement with the following:

(1) 30 percent of a MnDOT certified fly ash from the Approved Products list in accordance with 3115, except provide fly ash in the concrete mixture with at least 66 percent Si02 + Fe2O3 +Al2O3 on a dry weight basis for at least 12 consecutive months and at least 38 percent Si02 content, or
(2) 35 percent of a MnDOT certified ground granulated blast furnace slag from the Approved Products list.

D Concrete Mix Design Requirements

Design the concrete mix based on an absolute volume of 27.00 cu. ft ± 0.10 cu. ft [1.000 cu. m ± 0.003 cu. m] in accordance with the following:

(1) Fine aggregates complying with the requirements of Specification 3126 for aggregate quality.
(2) Coarse aggregates complying with the requirements of Specification 3137 for aggregate quality.
(3) Air content of 7.0 percent plus or minus 1.5 percent at the point of placement.
(4) High-early concrete placed at a water-cementitious ratio not greater than 0.38.

Submit the concrete mixes utilizing the MnDOT Contractor Mix Design Submittal Worksheet available on the Department's website at least 21 calendar days before the initial placement of concrete using the concrete mix design. For mix design calculations, the Engineer, in conjunction with the Concrete Engineer, will provide specific gravity and absorption data.

The Concrete Engineer, in coordination with the Engineer, will review the mix design submittal and approve the materials and mix design for compliance with the Contract.

The Contractor assumes full responsibility for the mix design and performance of the concrete.

The Engineer determines final acceptance of concrete for payment based on satisfactory field placement and performance.

D.1 Concrete Pavement < 3,500 cu. yd. [2,900 cu. m]

If the estimated quantity of concrete pavement in the Contract is less than 3,500 cu. yd. (2,900 cu. m.), calculated by multiplying the planned pavement area by the planned pavement thickness, provide a mix design meeting the following requirements:

(1) Grade A paving concrete placed at a water/cement ratio not greater than 0.42.
(2) Provide a fine aggregate gradation complying with Table 3126-3.
(3) Provide either a CA-15, CA-35, or CA-50 coarse aggregate gradation complying with the requirements of Table 3137-4.
(4) In lieu of (2) and (3) above, provide a Job Mix Formula in accordance with 2301.2.D.3.
(5) Specification 2301.2.D.4 incentive/disincentives for aggregate quality, well-graded aggregate and w/c ratio shall not apply.

D.2 Concrete Pavement ≥ 3,500 cu. yd. [2,900 cu. m]

If the estimated quantity of concrete pavement in the Contract is at least 3,500 cu. yd. [2,900 cu. m], calculated by multiplying the planned pavement area by the planned pavement thickness, provide a mix design meeting the following requirements:

(1) Grade A paving concrete placed at a water/cement ratio not greater than 0.40.
(2) Submit a Job Mix Formula in accordance with 2301.2.D.3.
(3) For concrete produced at a secondary concrete plant or as otherwise allowed by the Engineer, the Contractor has the option to design a mix in accordance with 2301.2.D.1.
(4) Specification 2301.2.D.4 incentive/disincentives for aggregate quality, well-graded aggregate and w/c ratio apply.

D.3 Job Mix Formula

Use at least two fractions of coarse aggregate that include the ¾ in+ [19 mm+] and ¾ in− [19 mm−] fractions.

A Job Mix Formula (JMF) contains proportions of materials and individual gradations of each material plus a composite gradation. The Engineer will base the JMF on the combination of coarse and fine aggregate in accordance with Table 2301-3. The Department will waive the gradation requirements of 3126 and 3137.

Table 2301-3
Job Mix Formula Working Range

Sieve Sizes	Working Range, %*
2 in [50 mm]	±5
1½ in [37.5 mm]	±5
1 in [25 mm]	±5
¾ in [19 mm]	±5
½ in [12.5 mm]	±5
⅜ in [9.5 mm]	±5
No.4 [4.75 mm]	±5
No.8 [2.36 mm]	±4
No.16 [1.18 mm]	±4
No.30 [600 µm]	±4
No.50 [300 µm]	±3
No.100 [150 µm]	±2
No.200 [75 µm]	≤ 1.6

* Working range limits of the composite gradation based on a moving average of 4 tests (N=4).

Add fill-in sieves as needed during the testing process to prevent overloading. Provide combined aggregates with 100 percent passing the 2 in [50 mm] sieve and no greater than 1.6 percent passing the No. 200 [75 µm] sieve. In addition, each coarse aggregate fraction must comply with the Material Passing the No. 200 [75 µm] sieve requirement in 3137.2.D.1.i.

Include working ranges based on the composite gradation of the sieves specified in Table 2301-3 with the JMF submittal.

Take samples at the belt leading to the weigh hopper or other locations close to the incorporation of the work as approved by the Engineer. The Engineer will determine the sampling location by using a random number chart and multiplying the random number by the sampling rate as defined in the Schedule of Materials Control. Test, and record the individual results.

The Engineer will randomly verify Contractor combined aggregate gradation results as defined in the Schedule of Materials Control.

If the quantities of concrete produced results in no gradation testing for any given day, include the untested quantity of concrete into the next day's production and include that quantity of concrete in the sampling rate. If the untested quantity is on the last day of production, add that quantity to the previous day's production.

D.3.a JMF Adjustments

If, during production, the moving average of QC aggregate gradation tests falls outside the allowable JMF working range, make adjustments within the limits specified in Table 2301-4 without submitting a new mix design as approved by the Engineer.

Table 2301-4
Allowable JMF Adjustments

Sieve Size	Allowable Adjustment, %
≥ No. 4 [4.75 mm]	±5
No. 8 [2.36 mm] – No.30 [600 µm]	±4
No. 50 [300 µm]	±3
No. 100 [150 µm]	±2

The Contractor may continue paving after submitting a new JMF with working range and aggregate volume adjustments to the Engineer. Submit all JMF adjustments on the MnDOT JMF Adjustments Worksheet available from the Department's website.

If the moving average of four tests falls outside of the adjusted allowable working range, stop production and provide a new mix design including JMF as directed by the Engineer in conjunction with the Concrete Engineer.

D.4 Concrete Pavement Incentives and Disincentives

The Department shall apply concrete mix incentives and disincentives for Contracts using at least 3,500 cu. yd [2,900 cu. m] of concrete, calculated by multiplying the planned pavement area by the planned pavement thickness, of paving concrete.

The Department will only apply coarse aggregate quality incentives or disincentives for materials provided or produced by the Contractor's primary concrete plant.

The Department will not provide water/cement ratio incentive payments for high-early mixes. The Department will only apply water/cement incentives or disincentives for concrete hauled in dump trucks, agitator trucks, or both.

If the Contractor adds water to the pavement surface without approval by the Engineer, the Department will not pay water/cement or ride incentives on sections where the water is added and the Engineer may reject the pavement in accordance with 1503,

"Conformity with Plans and Specifications" and 1512, "Unacceptable and Unauthorized Work."

D.4.a Coarse Aggregate Quality Incentive/Disincentive

The Engineer will accept the coarse aggregate for paving concrete by statistical methods and in accordance with all other aggregate quality requirements of 2301, 2461, and 3137.

The **Coarse Aggregate Quality Incentive/Disincentive** for CLASS B and CLASS C Aggregates will comply with the following:

The Engineer will take samples at the belt leading to the weigh hopper or other locations close to the incorporation of the work as approved by the Engineer. The Engineer will take samples in accordance with Table 2301-5:

Table 2301-5

Coarse Aggregate Quality Incentive/Disincentive Sampling Rates

Plan Concrete, cu. yd [cu. m]	Samples per Fraction (n)
3,500 – 7,500 [2,900 – 6,250]	3
7,501 – 10,000 [6,251 – 8,500]	5
10,001 – 25,000 [8,501 – 21,000]	10
25,001 – 50,000 [21,001 – 42,000]	15
50,001+ [42,001+]	20

The Engineer will consider the entire Project as a single lot for each of the two fractions containing the highest percentage by weight. If the Project is planned for construction over multiple years and prior to placing any concrete pavement, the Contractor shall request the Engineer calculate the incentive/disincentive payment on a yearly basis. The Engineer, in conjunction with the Concrete Engineer, will modify the sampling and testing rates as necessary.

The Engineer will establish a new statistical family for each change in aggregate source, fraction, or both.

The Engineer will randomly choose the acceptance samples.

The Engineer will divide a lot representing the Plan cubic yards [cubic meters] of concrete by the number of samples to form sublots. The Engineer will multiply the number of cubic yards [cubic meters] in a sublot by a random number to obtain the position in the sublot for the sample. The Engineer will split the samples and leave half of the sample for the Contractor. The Engineer's laboratory will test the samples and report the individual results. The Engineer will calculate a Quality Index (QI) for each fraction in accordance with the following:

$$QI = X + k(s)$$

Where:

$$\mathrm{X} = \mathrm{mean} = \sum \frac{X_i}{n}$$

X_i = individual test results

$$\mathrm{s} = \mathrm{standard\ deviation} = \sqrt{\sum \frac{(x_i - x)^2}{(n-1)}}$$

k = Adjustment Factor based on the number of tests as shown in Table 2301-6:

Table 2301-6
Adjustment Factor "k"

k	No. of Tests
1.09	3
1.23	5
1.26	10
1.27	≥ 15

If Class A, Class B, and Class C aggregates meet the requirements as determined by the Engineer, the Department will provide payment based on a per fraction incentive in accordance with Table 2301-7.

Table 2301-7 Coarse Aggregate Quality Incentive/Disincentive		
Aggregate Class	**QI for Fraction, %**	**Structural Concrete per cu. yd [cu. m] Payment Change per Fraction**
Class A (including quartzite and gneiss)	—	$1.00 [$1.30]
Class B (based on % absorption)	≤1.00	$1.00 [$1.30]
	1.01 – 1.45	$0.50 [$0.65]
	1.46 – 1.76	$0.00
	1.77 – 1.85	-$1.00 [$1.30]
	≥ 1.86	As recommended by the Concrete Engineer, with coordination of the Engineer
Class C (based on % carbonate)	≤ 15.0	$1.00 [$1.30]
	15.1 – 24.0	$0.50 [$0.65]
	24.1 – 31.0	$0.00
	31.1 – 35.0	-$1.00 [$1.30]
	≥ 35.1	As recommended by the Concrete Engineer, with coordination of the Engineer

The Department will not pay incentives or disincentives for Class R aggregates.

If the concrete mixture contains at least three fractions of coarse aggregate, the Engineer will consider only the two containing the highest percentage by weight as eligible for incentive. The Contractor may combine at least two sub-fractions to form the ¾ in – [19 mm –] fraction for either the coarse or fine fraction of the coarse aggregate. Blend the sub-fractions by weight. The Engineer will base the maximum incentive for aggregate quality on the two largest fractions by weight.

The Department will pay for Coarse Aggregate Quality Incentive/Disincentive for all paving concrete, including water/cement ratio concrete, and high-early concrete provided by the Contractor's primary paving plant.

D.4.b Water/Cement (w/c) Ratio

Provide and place concrete with a water/cement ratio not to exceed 0.40. Make any adjustments immediately when the water/cement ratio exceeds 0.40.

The Department will not make incentive payments for water/cement ratio on high-early mixes.

Do not add water to the surface of the concrete to aid in finishing without the approval of the Engineer. Supply sufficient trucks to ensure a steady forward progress of the paver.

The Department will determine the water/cement ratio for concrete hauled in dump or agitator trucks (concrete hauled in truck mixers are not eligible for w/c ratio incentives) in accordance with the following:

D.4.b(1) Water Content Determination

For a concrete paving batch plant, use an electronic meter approved by the Engineer to record the water, including temper water, added to the mix that is capable of printing the amount of total water on each batch ticket.

For a ready-mix plant, record the total water added to the mix, including temper water, on the computerized Certificate of Compliance.

The Engineer will determine the water content for calculating the water/cement ratio using the average water calculated from 10 batch tickets or Certificates of Compliances surrounding the randomly selected batch ticket sample (four previous tickets, ticket representing the random sample, and the five following tickets).

D.4.b(2) Water Content Verification

The Engineer will use plastic concrete taken at the plant site to verify the water content in the mix as determined in accordance with 2301.2.D.4.b.(1), "Water Content Determination." The Contractor will sample the plastic concrete as directed by the Engineer.

The Engineer will verify the water content in the plastic concrete mixture using the test procedure specified in AASHTO T 318-02, "Standard Test Method for Water Content of Freshly Mixed Concrete Using Microwave Oven Drying." The Engineer will begin the test within 45 min after the water has contacted the cement. Provide the microwave oven and the ancillary equipment as required by the Engineer to perform this test.

D.4.b(3) Cementitious Content Determination

The Engineer will determine the cementitious content for calculating the water/cement ratio using the average total cementitious calculated from 10 batch tickets or Certificates of Compliances surrounding the randomly selected batch ticket sample (four previous tickets, ticket representing the random sample, and the five following tickets).

D.4.b(4) W/C Ratio Incentive/Disincentive

The Engineer will base the statistical analysis of acceptance for water/cement ratio in accordance with with 2301.2.D.4.b(1), "Water Content Determination," and 2301.3.D.4.b(3), "Cementitious Content Determination," at a rate defined in the Schedule of Materials Control.

The Engineer will randomly choose acceptance samples. The Engineer will determine the sampling location by using a random number chart and multiplying the random number by the sampling rate as defined in the Schedule of Materials Control.

The Engineer will sample, test, and record the individual results.

If the quantities of concrete produced results in no Agency moisture testing for any given day, include the untested quantity of concrete into the next day's production and include that quantity of concrete in the sampling rate. If the untested quantity is on the last day of production, add that quantity to the previous day's production.

Do not place concrete mix not meeting the 0.40 water/cement ratio requirement in the work. The Engineer may accept material not meeting the Contract requirements and the Department will pay for the work in accordance with Table 2301-8.

Table 2301-8 W/C Ratio Incentive/Disincentive	
W/C Ratio Test Result	**Payment incentive/disincentive per cu. yard [cu. m]**
≤ 0.37	+$3.00 [$3.90]
0.38	+$1.75 [$2.25]
0.39	$0.50 [$0.65]
0.40	$0.00
0.41	-$0.50 [$0.65]
0.42	-$1.75 [-$2.25]
0.43	-$3.00 [-$3.90]
≥ 0.44	Determined by the Concrete Engineer

The Contractor may remove and replace concrete represented by water/cement ratios greater than 0.40. For concrete left in place with water/cement ratios greater than 0.40, if the level of payment is not defined in the table, the Engineer in conjunction with the Concrete Engineer, will evaluate the material based on the adequacy of the material for the use intended. Remove and replace unsatisfactory concrete as determined by the Engineer at no additional cost to the Department.

D.4.c Well-Graded Aggregate Optional Incentive

The Engineer will use the Contractor's combined aggregate gradation test results, as verified by Department testing, to determine eligibility for the incentive.

The Contractor has two well-graded aggregate optional incentives available as follows:

(1) Percent Retained Gradation Band in accordance with Table 2301-9.

TABLE 2301-9 8-18 or 7-18 Percent Retained Gradation Band		
Sieve Sizes	**8-18 % Retained**	**7-18 % Retained**
2 inch [**50 mm]**	0%	0%
1 ½ inch [**37.5 mm]**	≤9%	≤9%
1 inch [**25 mm]**	8% to 18%	7% to 18%
¾ inch [**19 mm**	8% to 18%	7% to 18%
½ inch [**12.5 mm]**	8% to 18%	7% to 18%
3/8 inch [**9.5 mm]**	8% to 18%	7% to 18%
#4 [**4.75 mm]**	8% to 18%	7% to 18%
#8 [**2.36 mm]**	8% to 18%	7% to 18%
#16 [**1.18 mm]**	8% to 18%	7% to 18%
#30 [**600 µm]**	8% to 18%	7% to 18%
#50 [**300 µm]**	≤ 13%	≤ 13%
#100 [**150 µm]**	≤8%	≤8%
#200 [**75 µm]**	≤8%	≤8%

(2) Gradation Zone II-A of the Coarseness Factor Chart in accordance with Table 2301-10.

TABLE 2301-10 Coarseness Factor Boundaries – Zone II-A	
Coarseness Factor (CF)	**Workability Factor (WF)**
52	34 - 38
68	32 - 36
The Coarseness Factor (CF) is defined as follows: $CF = \frac{\text{Combined \% retained above 3/8 in [9.5 mm] sieve}}{\text{Combined \% retained above No.8 [2.36 mm] sieve}} \times 100$	The Workability Factor (WF) is defined as follows: $\text{WF} = \text{Combined \% passing No.8 [2.36 mm] sieve}$

The Engineer will use statistical analysis of the Contractor's combined aggregate gradation samples for well-graded aggregate on a lot basis representing one day's paving. The lot will represent the cumulative average of the sublot values on each sieve for the gradation band or the cumulative average of the sublot values of the coarseness factor and workability factor for the coarseness factor chart.

An optional incentive is available to the Contractor provided a concrete mixture is designed and produced with a well-graded aggregate gradation that meets one of the following in accordance with Table 2301-11. The Contractor may achieve only one of the optional incentives for any single lot.

TABLE 2301-11 Well-Graded Aggregate Optional Incentive	
Gradation Options	**Payment incentive/disincentive per cu. yard [cu. m]**
8-18 Retained	\$2.00 per cubic yard (\$2.60 per m^3)
7-18 Retained	\$0.50 per cubic yard (\$0.65/m^3)
Gradation Zone II-A	\$2.00 per cubic yard (\$2.60 per m^3)

The Engineer will use the Contractor's combined aggregate gradation test results, as verified by Department testing, to determine compliance.

E Reinforcement Bars 3301

F Dowel Bars.....3302

G Concrete Joint Sealers

G.1 Preformed Type 3721

G.2 Hot-poured, Elastic Type..... 3725

G.3 Silicone Type.....3722

H Preformed Joint Filler.....3702

I Curing Materials

I.1 Burlap Curing Blankets.....3751

I.2 Poly-Alpha Methylstyrene (AMS) Membrane Curing Compound 3754

I.3 Linseed Oil Membrane Curing Compound 3755

I.4 Plastic Curing Blankets.....3756

J Form Coating Material.....3902

2301.3 CONSTRUCTION REQUIREMENTS

Use “slipform” as the standard construction method for concrete paving, unless otherwise specified in the Contract or allowed by the Engineer.

A.1 High-Early Strength Sections

For early use of the pavement as required by the Engineer, construct a section of pavement of high-early strength concrete in accordance with 2301.2.D, “Concrete Mix Design Requirements” at important road crossings, intersections, driveway entrances, or other locations as shown on the Plans or directed by the Engineer. Take precautions to satisfactorily finish, cure, and protect high-early strength concrete pavements.

A.2 Operation and Supervision

Notify the Engineer at least 24 h before placing concrete to allow for inspection. Do not place concrete until the Engineer approves preparations for concrete placement. If the Contractor fails to notify the Engineer at least 24 h before concrete placement, the Engineer may not allow concrete placement in accordance with 1503, “Conformity with Plans and Specifications” and 1512, “Unacceptable and Unauthorized Work.”

Provide paving operations supervision in accordance with 1506, “Supervision by Contractor.” Provide an organizational chart listing names and phone numbers of individuals and alternates responsible for mix design, quality control administration, and inspection to the Engineer. Post the organizational chart in the Contractor's on-site facility.

Provide a manufacturer’s manual explaining the operation and adjustments of the major pieces of power operated equipment used.

A.3 Plant Certification

Provide notice 16 hrs in advance of concrete paving production and in conjunction with the Engineer, perform a thorough on-site inspection of the concrete plant and complete MnDOT Form 2164, “Concrete Paving Plant Contact Report.” Sign the report to certify compliance with the paving requirements and to certify review of the continual maintenance of the plant.

Calibrate and correlate the testing equipment in accordance with 2461.

A.3.a Combination Plant Lab – Office Requirements

The Concrete Paving Contractor QC technicians and the Department QA technicians will equally share a combination plant lab – office during concrete paving.

For concrete paving projects in accordance with 2301.2.D.2, provide a separate combination plant lab – office in accordance with 1604, “Plant Inspection – Commercial Facility,” except as modified by the following characteristics and requirements:

(1) Located at the plant site within 100 yd [91 m] from the batch plant or other location, as approved by the Engineer,

(2) Plant lab and plant office areas separated and isolated by a wall,

(3) Total plant lab-office floor area, based on exterior dimensions, of at least 224 sq. ft [21 sq. m],

(4) Plant lab floor area, based on exterior dimensions, of at least 144 sq. ft [13.5 sq. m],

(5) Plant office floor area, based on exterior dimensions, of at least 80 sq. ft [7.5 sq. m],

(6) Heating and cooling system capable of maintaining a uniform temperature between 72° and 85° F [22° and 29° C],

(7) Drinking water container or cooler with adequate supply of potable water,

(8) Detached portable toilet conveniently located,

(9) Electrical power supply that provides adequate amperage for all electrical needs,

(10) Water supply (storage tank with a capacity of 50 gal or more, or pressurized water supply) connected to the sink faucet,

(11) Provide a sample storage area to prevent contamination of the samples,

(12) Plant lab furnished in accordance with the following:

(12.1) One sturdily built workbench or countertop at least 30 in × 144 in [0.75 m × 3.65 m],

(12.2) One service sink located near one end of the workbench with a water supply, faucet and an outside drain,

(12.3) Shelf space above workbench or countertop or at other convenient locations, totaling at least 8 linear ft [2.5 m] × 8 in [0.2 m],

(12.4) Electronic scales of sufficient size to weigh the samples for all required materials testing, and

(12.5) A four burner 30” standard electric stove top or stove and at least two additional electric burners to perform required aggregate testing per the Schedule of Materials Control.

(12.6) Microwave oven with turntable or wave deflection fan (900 Watt), heat resistant glass pan (approx. 9”x9”x2”), plain weave fiberglass cloth (10 oz/yd^2 and 14 mills thick), metal scrapper and grinding pestle,

(12.7) Metal bowls of sufficient size to perform all required material testing,

(13) Plant office furnished in accordance with the following:

(13.1) Two desks, one for the Department and one for the Contractor, with total exterior dimensions of at least 30 in × 60 in [¾ m × 1.50 m],

(13.2) At least four (4) chairs,

(13.3 A telephone capable of providing email, and

(13.4) A printer with scanning and copying capabilities.

For concrete paving projects supplied by a Certified Ready-Mix Plant, the separate Combination Plant - Lab Office requirements of 2301.2.A.3.a do not apply with the exception of the following:

(1) Electrical power supply that provides adequate amperage for all electrical needs,

(2) Water supply (storage tank with a capacity of 50 gal or more, or pressurized water supply) connected to the sink faucet,

(3) Electronic scales of sufficient size to weigh the samples for all required materials testing, and

(4) At least six (6) electric burners to perform required aggregate testing per the Schedule of Materials Control.

(5) Metal bowls of sufficient size to perform all required material testing,

(6) If w/c incentives apply, provide a microwave oven with turntable or wave deflection fan (900 Watt), heat resistant glass pan (approx. 9”x9”x2”), plain weave fiberglass cloth (10 oz/yd^2 and 14 mills thick), metal scrapper and grinding pestle,

Do not begin concrete paving operations until the Engineer approves the combination plant lab–office. The Contract square yard [square meter] price for *Concrete Pavement* includes the cost of the plant lab-office.

A.4 Sampling and Testing

Provide a MnDOT Certified Concrete Plant Level 2 Technician to oversee testing and plant operations and to remain on-site during concrete production or have cellular phone availability.

Provide technicians with certification at least meeting MnDOT Concrete Plant Level 1 to perform all of the duties in accordance with the MnDOT Concrete Manual. The Engineer will provide technicians with certification at least meeting MnDOT Concrete Plant Level 1 to perform all of the duties in accordance with the MnDOT Concrete Manual.

Performs testing in accordance with the MnDOT Concrete Manual and determines testing rates meeting the requirements of the Schedule of Materials Control. The Engineer performs testing in accordance with the MnDOT Concrete Manual and determines testing rates meeting the requirements of the Schedule of Materials Control.

Take samples randomly using ASTM D 3665, Section 5.

Take samples in accordance with the 2011 Schedule of Materials Control except as modified in the following tables below:

<table>
<tr><th colspan="7">Concrete Pavement - Concrete Plant Production</th></tr>
<tr><th>Pay Item No.</th><th>Test Type</th><th>Spec. No.</th><th colspan="2">Producer/Contractor Testing</th><th colspan="2">Agency Testing</th><th>Form No.</th></tr>
<tr><td rowspan="3">2301</td><td rowspan="3">Gradation Testing (QC/QA) (5-694.145 and 5-694.148)</td><td rowspan="3">3126
3137</td><td colspan="2">Test the first 4 QA samples of production each time the Contractor mobilizes the plant or changes aggregate sources.</td><td rowspan="2"><u>For a concrete paving batch plant:</u>

1 per day on randomly selected samples thereafter.</td><td rowspan="2"><u>For a certified ready-mix plant:</u>

1 per 1000 m^3 (1000 yd^3) or 1 per week, whichever results in highest sampling rate on randomly selected samples thereafter.</td><td rowspan="3">21764 Concrete Aggregate Worksheet JMF

Well-graded Concrete Aggregate Worksheet</td></tr>
<tr><td><u>For a concrete paving batch plant:</u>

1 per 1200 m^3 (1500 yd^3) or completed 1 per ½ day, whichever results in the highest sampling rate.</td><td><u>For a certified ready-mix plant:</u>

1 per 400 m^3 (yd^3) or completed every 4 hours, whichever results in the highest sampling rate.</td></tr>
<tr><td colspan="2">Performing testing on representative material at the end of the most recent day of production is allowed.

If well-graded aggregate incentives apply: Use the Contractor's gradation results for well-graded aggregate incentive calculations as verified by Agency testing</td><td colspan="2">Identify the gradation samples with "QA Gradation" on the Sample ID Card and include the JMF Number and the QC Gradation results.

If Coarse Aggregate Quality Incentive/Disincentives apply:
The Agency may also use the QA gradation sample for the Coarse Aggregate Quality incentive/disincentive testing. In this case, notify the Producer/Contractor to double the QC/QA gradation sample size.</td></tr>
</table>

Concrete Pavement - Concrete Plant Production							
Pay Item No.	**Test Type**	**Spec. No.**	**Producer/Contractor Testing**		**Agency Testing**		**Form No.**
2301	Coarse Aggregate Testing on -75 µm (#200) (QC/QA) (5-694.146)	3137	Starting on the first day of production and each time the Contractor mobilizes the plant, changes aggregate sources, or the cleanliness of the coarse aggregate is in question: test the first sample and then at least 1 of the next 3 samples. 1 test per day thereafter **Test these samples at the plant**.		1 randomly selected sample on the first day of production and each time the Contractor mobilizes the plant, changes aggregate sources, or the cleanliness of the coarse aggregate is in question. **Test these samples at the plant**.		21764 Concrete Aggregate Worksheet JMF
					<u>For a concrete paving batch plant:</u> 1 test per week thereafter	**<u>For a certified ready-mix plant:</u>** 1 per 1000 m^3 (1000 yd^3) or 1 per week, whichever results in highest sampling rate on randomly selected samples thereafter.	
	Aggregate Moisture Testing (QC/Verification) **(5-694.142)**		**<u>For a concrete paving batch plant:</u>** **If w/c incentives do not apply:** 1 per 750 m^3 (1000 yd^3) or completed every 4 hours, whichever results in the highest sampling rate**.**	**<u>For a certified ready-mix plant:</u>** **If w/c incentives do not apply:** 1 per 200 m^3 (200 yd^3) or completed every 4 hours, whichever results in the highest sampling rate	**<u>For a concrete paving batch plant:</u>** **If w/c incentives apply:** 1 per 750 m^3 (1000 yd^3) or completed every 4 hours, whichever results in the highest sampling rate. Take initial samples for aggregate moisture testing within the first 175 m^3 (250 yd^3).	**<u>For a certified ready-mix plant:</u>** **If w/c incentives apply:** 1 per 200 m^3 (200 yd^3) or completed every 4 hours, whichever results in the highest sampling rate. Take initial samples for aggregate moisture testing within the first 75 m^3 (100 yd^3).	Concrete W/C Ratio Calculation Worksheet

Concrete Pavement - Concrete Plant Production						
Pay Item No.	**Test Type**	**Spec. No.**	**Producer/Contractor Testing**	**Agency Testing**		**Form No.**
	Aggregate Moisture Testing (QC/Verification) **(5-694.142)** **CONTINUED FROM PREVIOUS PAGE**		Complete the initial moisture content and adjust the batch water prior to the start of concrete production each day. If weather conditions allow, performing moisture testing on representative material at the end of production the prior evening is allowed.	**If w/c incentives apply:** Use aggregate moisture results for determining the water content to calculate the w/c ratio incentive/disincentive. **Do not leave samples unattended.**		
2301	Water Content Verification Testing **(Microwave Oven Verification) (5-694.532)**	2301	Obtain the plastic concrete sample at the plant.	**If w/c incentives apply:** Microwave oven verification testing to verify the w/c ratio is completed in conjunction with Agency aggregate moisture testing. **Do not leave samples unattended.**		Concrete W/C Ratio Calculation Worksheet
				For a concrete paving batch plant: Take initial sample for microwave oven verification testing within the first 175 m^3 (250 yd^3). At least one additional verification test should be taken if more than 750 m^3 (1000 yd^3) is produced in a day.	**For a certified ready-mix plant:** Take initial sample for microwave oven verification testing within the first 75 m^3 (100 yd^3). At least one additional verification test should be taken if more than 400 m^3 (400 yd^3) is produced in a day.	

A.5 Contractor Charting

Maintain and keep control charts current. Provide and display easily readable sized charts on the testing facility wall or store in a 3-ring binder. Plot the following information on control charts using a method approved by the Engineer:

(1) Composite gradation,

(2) Air content (QC and QA),

(3) Moisture content of aggregates, and

(4) Water/cement ratio.

Also include the following information on the charts:

(1) Date,

(2) Time,

(3) Lot and sublot,

(4) Admixture dosage adjustments, and

(5) Other data necessary to facilitate control of the process.

Provide all reports, records, and diaries developed during the progress of construction activities to the Engineer. Provide all batch tickets and test results to the Engineer on a daily basis. The Engineer may suspend plant operations if the Contractor fails to provide daily test results.

A.6 MIT-SCAN T2 Non-Destructive Testing Device

The Contractor shall furnish a MIT-SCAN T2 non-destructive testing device having the ability to measure the location of concrete reinforcement, dowel bars and concrete pavement thickness in a single device. Agency and Contractor personnel shall mutually use this non-destructive testing device several times a day during concrete pavement construction. Agency observations do not relieve the Contractor of the requirement to properly place the concrete reinforcement and dowel bars as shown in the plans. In addition, the Department reserves the right to reject the pavement in accordance with 1503, “Conformity with Plans and Specifications” and 1512, “Unacceptable and Unauthorized Work.”

The Engineer will not provide additional payment for furnishing the above equipment for the Department's use.

B Subgrade and Aggregate Base Preparations

Prepare the subgrade and aggregate base in accordance with 2112 and 2211 and the following:

Fine grade the aggregate base to the required shape and grade as shown in the plans, allowing construction of the pavement to the specified thickness and cross section as shown in the plans. Use an approved fine grading machine mounted on crawler tracks.

Shape and maintain the shoulders to allow surface water to drain away from the pavement and off the shoulders.

C Setting Forms

Provide forms meeting the following requirements and characteristics:

(1) Steel, straight edge sides,

(2) Depth equal to the specified pavement thickness,

(3) Smooth and free of localized indentations and deformities,

(4) Top face with deviations no greater than ⅛ in [3 mm] in any 10 ft [3 m] section,

(5) Faces of straight forms with deviations no greater than ¼ in [13 mm] in any 10 ft [3 m] section,

(6) Side forms containing no bends or damaged sides,

(7) Forms containing no damaged joint locks or pin pockets, and

(8) Form lengths at least 10 ft [3 m] long with horizontal joint and base width equal to the depth of the forms.

For pavements with radii no greater than 100 ft [30 m], use flexible or curved forms approved by the Engineer. Provide devices to securely set forms and withstand operation of the paving equipment without springing, settlement, or lateral displacement. Provide forms with joint locks to tightly join ends of abutting form sections together. Connect individual form sections using methods creating a continuous form.

Set the forms to the proper alignment and grade as shown in the Plans for a distance equal to at least 3 h ahead of concrete placement.

Compact the foundation before placing the forms in accordance with 2301.3.B. Ensure the forms have a firm and uniform bearing over the entire base area, are tightly joined and securely staked, and are clean and free of accumulations of hardened concrete. Coat the contact faces of the forms with an approved form coating material in accordance with 3902 before placing the concrete.

During a rain event, remove and reset the forms as necessary to allow drainage.

D Concrete Equipment and Paving Operations

Provide self-propelled spreading and finishing machines capable of consolidating and finishing the concrete, and producing a finished surface meeting the requirements specified.

D.1 Slipform Construction

Place concrete using a slipform paver or combination of pavers designed to spread, consolidate, screed, and float-finish the freshly placed concrete with minimum hand finishing. Provide a slipform paver with a non-oscillating extrusion plate with an adjustable angle of entry.

Place the concrete pavement prior to placing curb and gutter. If the sequence of operations includes placing the curb and gutter prior to the concrete pavement, submit a jointing plan to the Engineer for approval prior to placing the curb and gutter.

Consolidate the full width and depth of concrete pavement placed by a single pass of a series of internal vibrators. Operate full-width vibrators from 3,600 VPM [60 Hz] to 7,000 VPM [117 Hz] in concrete and from 4,150 VPM [70 Hz] to 8,000 VPM [133 Hz] when checked in air. Deliver the vibrator impulses directly to the concrete and operate at an intensity to consolidate the concrete uniformly throughout the entire depth and width of the concrete. The Contractor may increase the vibrator frequency as approved by the Engineer. Perform additional testing as required by the Engineer at no additional cost to the Department. If the vibrator fails, suspend operations and remove unconsolidated concrete.

Regulate the rate of progress of the vibratory equipment and the duration of the application to fully, but not excessively, vibrate the concrete. Suspend the operation of vibrators if the forward progress of the paver stops.

Attach vibrators to spreading or finishing equipment. Do not allow vibrators to come in contact with preset dowel basket assemblies, the grade, pavement reinforcement, or side forms. Do not allow the operation of vibrators to cause separation or segregation of the mix ingredients, including the downward displacement of large aggregate or the accumulation of laitance on the concrete surface. The Contractor may reduce the vibration frequency within the specified range if reducing the forward progress of the paver to avoid segregation of the concrete mix. Connect the power to all vibrators so that they cease when the machine motion is stopped. Stop paving operations if a vibrator fails to operate within the specified range.

Provide an electronic monitoring device meeting the following characteristics and requirements to display the operating frequency of each individual internal vibrator for concrete pavement placed by the slipform method:

(1) Contains a readout display near the operator's controls; visible to the paver operator and to the Engineer,

(2) Operates continuously as the paving machine operates,

(3) Displays all the vibrator frequencies with manual and automatic sequencing for each of the individual vibrators, and

(4) Records the following at least every 25 ft [7.62 m] of paving or at least every 5 min of time:

  (4.1) Clock time,

  (4.2) Station location,

  (4.3) Paver track speed, and

  (4.4) Operating frequency of individual vibrators.

Provide an electronic copy containing the record of data after the completion of the concrete paving operation. Provide vibration data daily as directed by the Engineer.

Operate the slipform paver with a continuous forward movement, and coordinate all operations of mixing, delivering, and spreading concrete to provide uniform progress with minimal stopping and starting of the paver.

Equip the paver with automatic grade control capable of maintaining both elevation and longitudinal line as shown in the Plans at both sides of the paver, by controlling the elevation of one side and controlling the crown, or by controlling the elevation of each side independently. Achieve the grade reference by means of an erected string line.

Tightly stretch a wire or string line set parallel to the established grade for the pavement surface to achieve the grade reference. Set the control reference and support the line at intervals to maintain the established grade and alignment.

D.2 Fixed Form Construction

Place concrete using one or more machines to spread, screed and consolidate between previously set side forms. Accomplish vibration of these areas using hand held or machine mounted internal vibrators.

If not using an electronic monitoring device, use a tachometer or similar device to demonstrate to the Engineer that the paving equipment vibration meets the requirements in this section.

Use hand held vibrators to consolidate concrete adjacent to side forms and fixed structures. Operate the hand held vibrators at a speed of at least 3,600 VPM [60 Hz]. Do not allow the vibrator head to contact the joints, load transfer devices, reinforcement, grade, or side forms. If the vibrator fails, suspend operations and remove unconsolidated concrete.

Continue vibration to achieve adequate consolidation, without segregation, for the full depth and width of the area placed.

Furnish an adequate number and capacity of machines to perform the work at a rate equal to the concrete delivery rate.

Strike-off concrete with a clary screed unless otherwise allowed by the Engineer. Finish small or irregular areas that are inaccessible to finishing equipment using other methods as approved by the Engineer.

Discontinue any operation that causes displacement of the side forms from the line or grade or causes undue delay, as determined by the Engineer, due to mechanical difficulties.

E Batching and Mixing

Batch and mix the concrete in accordance with 2461 and the following:

E.1 Batching Requirements

Perform the initial spot check of the measuring equipment in accordance with the MnDOT Concrete Manual for accuracy and sensitivity before starting production operations. Provide a copy of the inspection certificate to the Engineer.

Provide to the Engineer a computerized batch ticket that includes the following:

(1) Date,

(2) State project number (SP) or (SAP),

(3) Time concrete was batched,

(4) Quantity of concrete in this load,

(5) Running total of each type of concrete, each day for each project,

(6) Mix number,

(7) Labels identifying each material that correlates with the Contractor mix design, including cementitious and admixture abbreviations or MnDOT 5 digit pit numbers),

(8) Target weight of materials,

(9) Actual batched weights of materials,

(10) Temper water, and

(11) Total water weight.

Suspend batching and mixing operations if satisfactory finishing and curing of the pavement does not occur as determined by the Engineer..

E.2 Cement Cutoff and Yield

Submit the cement records to the Engineer. Make positive cement cutoffs, except if providing cement proportioned in a certified ready-mix plant, and delivering the batch to the construction site in truck mixers, in accordance with the following:

(1) Perform individual cement cutoffs at the following intervals:

(1.1) After using 500,000 lb [250 tonne] of cement,

(1.2) Before using 2,000,000 lb [1,000 tonne] of cement,

(1.3) Using at least every 3,000,000 lb [1,500 tonne] or once a week, whichever provides the longer time interval between cutoffs.

(2) If delivering bulk cement directly to the concrete batching plant in railroad cars or sealed transport trucks, submit copies of the freight bills to the Engineer on the same day received from the transporting company.

(3) Advise the Engineer of the method and schedule of cement unloading. Do not unload cement until the Engineer approves the operation.

The Engineer will verify the following:

(1) Individual cutoffs do not show an underrun in cement usage greater than 1.5 percent of the quantity specified, and

(2) The final cutoff does not show an overall underrun greater than 1.0 percent.

(3) If either one or both of these limitations are exceeded, the Engineer will not pay for the concrete represented at the Contract unit bid prices.

The Engineer may reject defective concrete in accordance with 1503, “Conformity with Plans and Specifications” and 1512, “Unacceptable and Unauthorized Work,” or the Department may pay for the defective concrete at an adjusted unit price at the same ratio to the Contract unit price as the quantity of cement used to the quantity of cement required less the allowable underrun. If the cement exceeds the limitations for individual cutoff and final cutoff, the Department may apply the price adjustment to the cutoff value that produces the greatest monetary deduction.

F Placing Concrete

Dump or discharge concrete without causing grade displacement or damage to the existing asphalt or bond breaker layer. Repair damage to the grade, existing asphalt, or bond breaker layer as approved by the Engineer, at no cost to the Department. Provide protection for turning concrete trucks.

Maintain the grade in a moist condition until placement of concrete.

Construct mainline pavement in a single layer of concrete. Place the concrete pavement in one complete pass of the paving machine to minimize the need for hand finishing.

Coordinate paving operations for mixing, delivering, spreading, and extruding the concrete to provide uniform progress of the paver. Use sufficient trucks to ensure a steady forward progress of the paver. If the forward movement of the paver stops for a period long enough to create a cold joint or honeycombing, construct a header joint in accordance with 2301.3.H.3.

Do not add water to the surface of the concrete to aid in finishing without the approval of the Engineer.

When placing concrete on asphalt or asphalt bond breakers comply with the following:

(1) Do not place concrete on an asphalt surface with an asphalt surface temperature greater than 120° F [50° C].

(2) Maintain the asphalt surface in a moist condition as necessary and at a surface temperature not greater than 120° F [50° C] before placing the concrete.

(3) The Engineer will allow the Contractor to apply water and/or a whitewash of hydrated lime and water to cool the asphalt surface or other methods allowed by the Engineer.

(4) Before placing concrete on a milled asphalt surface, clean the milled surface by sweeping, and patch as shown in the Plans in accordance with 2231or as required by the Engineer.

When placing concrete adjacent to in-place concrete pavement, protect the following:

(1) All ends of transverse joints 3/16 in [5 mm] or wider to the satisfaction of the Engineer. The Engineer will allow sawing through the existing joint when sawing the newly placed concrete, and

(2) The in-place pavement to prevent damage.

Do not allow the edges of the pavement, including longitudinal joints, to deviate from the line shown on the Plans by greater than ½ in [13 mm] at any point.

Set manhole and catch basin frames or rings to the required elevation during the paving operations.

F.1 Consistency

For slipform concrete pavement placement, place the concrete with a slump value that optimizes placement, except ensure the concrete does not slough or slump and is adequately consolidated and meets all other requirements. Maintain the concrete at a uniform consistency. The Engineer will not allow an edge slump greater than ⅛ in [3 mm] or irregular edge alignment.

For fixed form placement, place the concrete with a slump no greater than the maximum allowable slump in accordance with 2461.4A4a.

F.2 Air Content

Maintain the air content of Type 3 paving concrete at the specified target of 7.0 percent ±1.5 percent of the measured volume of the plastic concrete in accordance 1503.

Make any adjustments immediately to maintain the desired air content.

Measure the air content after placement on the grade but before consolidation.

If using the slipform paving method, establish an air loss correction factor (ACF) to determine the air content after consolidation once per half day of paving. Apply the ACF to tests taken before consolidation to estimate the air content after consolidation. Place concrete with an air content of at least 5.0 percent after consolidation.

Take the following actions for the following air content test results with the ACF applied or a test taken after consolidation:

(1) A single test (QC or QA) from 5.0 percent to 5.5 percent, adjust the mix design to obtain an air content greater than 5.5 percent without stopping production,

(2) Two consecutive tests (QC or QA) from 5.0 percent to 5.5 percent, make immediate adjustments to obtain an air content greater than 5.5 percent or stop production. Test every truck until the air content test results meet the requirements. Test at least three additional trucks after obtaining the correct air content.

(3) Any test (QC or QA) less than 5.0 percent, make immediate adjustments to obtain an air content greater than 5.5 percent or stop production. Test every truck until the air content meets the requirements. Test at least three additional trucks to ensure the concrete remains within compliance. Perform additional testing on the hardened concrete as required by the Engineer in conjunction with the Concrete Engineer.

F.2.a Non-Conforming Material

Only place Type 3 concrete meeting the air content requirements in the work. If the Contractor places Type 3 concrete not meeting the air content requirements into the work, the Engineer will not accept nonconforming concrete at the Contract unit price. For concrete not meeting the required air content, the Engineer will make determinations regarding the disposition, payment, or removal. The Department will adjust the Contract unit price for the Contract pay item of the concrete in accordance with Table 2301-12. When there is not a separate Structural Concrete bid price for an item of work, the Department will reduce payment based on a concrete price of $60.00 per cu. yd [$78.00 per cu. m] or the Contractor-provided invoice amount for the concrete in question, whichever is less.

Table 2301-12 Paving Concrete	
Air Content Before Consolidation, %	**Adjusted Contract Unit Price**
>10.5	The Department will pay 75 percent of the Contract unit price for the concrete represented and placed as approved by the Engineer.
>8.5 – ≤10.5	The Department will pay 95 percent of the Contract unit price for the concrete represented and placed as approved by the Engineer
5.5 – 8.5	The Department will pay 100 percent of the Contract unit price for the concrete represented and placed as approved by the Engineer
>4.5 – <5.5	The Department will pay 75 percent of the Contract unit price for the concrete represented and placed as approved by the Engineer
>4.0 – ≤4.5	The Department will pay 25 percent of the Contract unit price for the concrete represented and placed as approved by the Engineer. If the Engineer, in conjunction with the Concrete Engineer, determines the surface is exposed to freeze-thaw cycling, coat the concrete with an approved epoxy penetrant sealer from the MnDOT Approved Products list.
≤ 4.0	Remove and replace concrete in accordance with 1503, "Conformity with Plans and Specifications" and 1512, "Unacceptable and Unauthorized Work" as directed by the Engineer. If the Engineer, in conjunction with the Concrete Engineer, determines the concrete can remain place, the Engineer will not pay for the concrete and if the Engineer determines the surface is exposed to salt-brine freeze-thaw cycling, coat with an approved epoxy penetrant sealer from the MnDOT Approved Products list.

G Placing Reinforcement

Provide and place reinforcement meeting the following requirements and characteristics:

(1) Provide epoxy coated reinforcement in accordance with 2472.

(2) Provide and place reinforcement bars including keyway bars, tie bars, taper steel, and stopper bars.

(3) Place keyways as shown on the plans.

(4) Provide and place supplemental pavement reinforcement as shown on the plans.

(5) Provide and place reinforcement bars on chairs, in stakes, utilizing tie bar basket assemblies or by appropriate equipment for depressing the bars to the specified location.

(6) For slipform paving, stake the tie bar steel to the roadbed, or use a mechanical device attached to the spreader or paver to place tie bar steel required for L1T joints as shown on the plans. Space and depress the tie bar steel to the desired depth and location as shown on the plans. Do not place tie bars over a dowel bar assembly.

H Joint Construction

Unless otherwise shown on the plans, construct all joints perpendicular to the grade. Place dowel bars parallel to the grade and parallel to the centerline of the pavement.

H.1 Dowel Bar Placement

Provide dowel bar assemblies manufactured in single units for the lane widths as shown on the plans, unless otherwise approved by the Engineer. Do not use more than two assembled sections in any one joint for ramps, loops, and tapered sections.

Secure the dowel bar assemblies to prevent movement during concrete placement in accordance with MnDOT Standard Plate 1103 and the following:

(1) If placing dowel bar assemblies on asphalt or asphalt bond breaker layers, secure the assemblies with at least seven anchorage points. Place four of the anchorage points on the assembly side facing the front of the paver. Fasten the assemblies in accordance with the following:

(1.1) Place pins or fasteners of sufficient length and shank diameter of at least 0.177 in [0.45 cm] to penetrate through the asphalt bond breaker layer and into the concrete at least 1 in [25 mm] or at least 2 in [50 mm] into the in-place asphalt layer,

(1.2) Before paving, demonstrate the fastening method to the Engineer for approval.

Within 1 h before covering with concrete, coat the dowel bars with a thin uniform coating of an approved form coating material in accordance with 3902 and listed on the MnDOT Approved Products List.

Before placing the concrete, mark the location on both sides of each transverse joint as approved by the Engineer. Transfer the markings to the fresh concrete immediately after completing the final finishing operations.

The Contractor may use a mechanical dowel bar inserter to place dowel bars in the pavement as approved by the Engineer, in conjunction with the Concrete Engineer. Immediately before inserting the dowels, coat the dowels with a thin uniform coating of an approved form coating material in accordance with 3902 and listed on the MnDOT Approved Products List. If using a dowel bar inserter, initially and on each production day, demonstrate to the Engineer that the inserted dowel bars in the completed concrete pavement are parallel to the surface and centerline slab and are located at mid depth of the slab thickness.

H.1.a Quality Control Plan for Dowel Basket Assemblies

Provide a Quality Control Plan in writing to the Engineer for acceptance that provides a method for keeping the dowel basket assemblies anchored to the existing asphalt or bond breaker layer and into the underlying concrete. The Quality Control Plan shall include the following at a minimum:

(1) Proposed type and number of fasteners

(2) Dowel basket assembly anchoring plan (ie. Anchored all basket assemblies prior to concrete placement, one lane at a time, anchor all basket assemblies during the concrete placement operation, etc.)

(3) Procedure if assemblies do not hold with the proposed method

(4) Sampling rate for locating basket assemblies with the MIT-SCAN T2

H.2 Joint Establishment

Space contraction joints at the intervals shown on the plans, except shorten the spacing at the following to provide panel lengths at least 5 ft [1.5 m]:

(1) Adjacent to header joints,

(2) Reinforced panels,

(3) Railroad grade crossings, and

(4) Free ends of pavement.

Provide either wet-cut saws referred to as “conventional concrete saws” or lighter weight dry-cut saws referred to as “early-entry concrete saws” capable of establishing joints sooner than the conventional saws.

Provide initial joint sawing as shown on the plans. Perform the initial sawing as soon as the concrete will support the joint sawing operation without raveling and before random cracking occurs.

Immediately after completing the joint sawing, use water under nozzle pressure to remove the sawing residue from each joint and the pavement surface.

If widening is necessary, do not widen the joints to full width until the concrete is at least 24 h old or longer if the sawing causes raveling of the concrete.

Stake preformed joint filler material for expansion joints in place to maintain proper position as shown on the Plans during concrete placement.

Extend transverse joints constructed in the pavement through the integrant curb.

H.3 Constructing Headers

Construct construction headers, temporary headers, and permanent headers as shown on the plans.

The Engineer will not allow incorporating any concrete accumulated in the grout box of the paver into the pavement. Construct all headers such that the concrete contained in the grout box is removed from the Project. Use any approved construction header method as shown in the Standard Details.

Use internal vibration to consolidate the concrete along header joints before final finishing.

I Surface Finishing

Use a ⅜ in [10 mm] radius edging tool to finish edges of the pavement.

After consolidating, screeding, and floating the concrete, give the pavement surface a final finish texture in accordance with 2301.3.I.1, “Pavement Texture” unless 2301.3.I.2, “Pavement Tining” is required in the Contract.

I.1 Pavement Texture

Test the adequacy of the pavement skid resistance meeting the requirements of ASTM E 965-87, “Test Method for Measuring Surface Macrotexture Depth Using a Sand Volumetric Technique.” Provide a texture depth of at least $^{1}/_{25}$ in [1.00 mm].

The Department defines a lot as pavement of a single lane. Establish a separate lot for each lane on the Project.

The Department defines a sublot as the rate at which an individual measurement is taken over a given length. The Department considers a sublot as one lane wide, measured in accordance with the following:

(1) From the pavement edge to the adjacent longitudinal joint,

(2) From one longitudinal joint to the next, or

(3) In the absence of a longitudinal joint, between pavement edges.

(4) Each ramp and loop 18’ (5.5 m) wide or less is considered a single lane.

The Engineer will break lots into sublots representing 1,000 linear ft [300 m] of pavement. Test the pavement surface at a point located transversely in the outside wheel path as determined by the Engineer. Test adjoining driving lanes at the same location. The Engineer will determine the locations using a random number multiplied by length of the sublot. If the Project or individual lane results in less than three sublots, the Engineer will divide the Project or individual lane lot into three sublots of equal length.

Complete surface texture testing no later than 24 hours after pavement placement unless otherwise approved by the Engineer. Refer to Table 2301-13for the acceptance criteria of texture depths below the specification limits.

Table 2301-13
Pavement Texture Depth

Texture Depth Test Results for Individual Tests	Acceptance Criteria
< $^{1}/_{25}$ in to ≥ $^{1}/_{32}$ in [< 1.00 mm to ≥ 0.80 mm]	The Engineer will accept the work if the Contractor amends the operation to achieve the required depth of at least $^{1}/_{25}$ in [1.00 mm] as approved by the Engineer. If the Contractor fails to correct the operation, the Engineer will suspend the paving operation until corrections produce the required results.
< $^{1}/_{32}$ in [< 0.80 mm]	Perform concrete grinding of the pavement represented by this test to attain the necessary texture of $^{1}/_{25}$ in [1.00 mm] as required by the Engineer.

Run additional tests at 100 ft [30 m] intervals before and after the failing test location to determine the limits of any individual failing test.

I.2 Pavement Tining

Pull a carpet drag longitudinally along the pavement before the concrete attains its initial set to obtain the final finish. Mount the drag on a bridge. Provide a drag with the following dimensions:

(1) As wide as the concrete placed, and

(2) Longitudinal length with sufficient surface contact to produce a texture approved by the Engineer.

Provide an artificial grass type carpeting for the carpet drag meeting the following characteristics and requirements:

(1) Molded polyethylene pile face,

(2) Blade length from ⅝ in to 1 in [15 mm to 25 mm], and

(3) Total weight of at least 70 oz per sq. yd [2.35 kg per sq. m].

Provide a backing made of a strong, durable material not subject to rot with the backing adequately bonded to the facing to withstand the specified use.

Immediately after carpet dragging the pavement surface, use a mechanized device providing a randomized tine spacing from ⅝ in to 1 in [16 mm to 26 mm] to apply a transverse metal-tine texture to the pavement meeting the following dimensions:

(1) Width from ½ in to ⅛ in [2 mm to 3 mm] and

(2) Depth from ⅛ in to $^{5}/_{16}$ in [3 mm to 8 mm].

Do not dislodge coarse aggregate particles. The Contractor may use manual methods to achieve similar results on ramps and other locations as approved by the Engineer. The Contractor may use other texturing equipment to obtain an equivalent texture as approved by the Engineer.

The Engineer will not require metal-tine texturing on subsidiary paving areas such as cross-overs and parking lanes exempted by the Engineer, or on areas with speed limits no greater than 35 mph [55 km/h] as specifically exempted by the Contract or the Engineer.

J Concrete Curing and Protection

After completing final finishing operations, cure all exposed concrete surfaces. Use one of the following curing methods:

(1) Place the membrane curing compound conforming to 3754 or 3755 within 30 minutes of concrete placement or once the bleed water has dissipated unless otherwise directed by the Engineer in accordance with 2301.3.J.1.a. Place the membrane curing compound on the edges within 30 minutes after permanent removal of the forms or curing blankets unless otherwise specified in the Contract.

(2) Place plastic curing blankets or completely saturated burlap curing blankets as soon as practical without marring the surface in accordance with 2301.3.J.1.b..

Whenever weather conditions are such as to cause unusual or adverse placing and finishing conditions or equipment failures occur, expedite the application of a curing method or temporarily suspend the mixing and placing operations, as the conditions require.

If necessary to remove the coverings to saw joints or perform other required work, and if the Engineer approves, remove the covering for the minimum time required to complete that work.

Failure to comply with the above provisions will result in the Engineer, in conjunction with the Concrete Engineer, applying a monetary deduction in accordance with 1503. When there is not a separate Structural Concrete bid price for an item of work, the Department will apply a monetary deduction of $30.00 per cu. yd [$39.00 per cu. m] or 50% of the Contractor-provided invoice amount for the concrete in question, whichever is less.

J.1 Curing Methods

J.1.a Membrane Curing Method

Before application, agitate the curing compound as received in the shipping container to obtain a homogenous mixture. Protect membrane curing compounds from freezing before application. Handle and apply the membrane curing compound in accordance with the manufacturer's recommendations.

Apply the curing compound in accordance with the following:

(1) At a rate of 1 gal per 150 sq. ft (1 L per 4 m^2) of surface curing area.

(2) Apply curing compound homogeneously to provide a uniform, solid, white opaque coverage on all exposed concrete surfaces (equal to a white sheet of typing paper). If using a Department - approved curing compound with a non-white base color, apply the compound to provide a uniform, solid, opaque consistency meeting the intent of the requirement in this section.

(3) If the curing compound is damaged during the curing period, immediately repair the damaged area by re-spraying.

(4) If the Engineer determines that the initial or corrective spraying result in unsatisfactory curing, the Engineer may require the Contractor to use the blanket curing method at no additional cost to the Department.

Use the fully-automatic, self-propelled mechanical power sprayer approved by the Engineer to apply the curing compound in accordance with the following:

(1) Operate the equipment to direct the curing compound to the surface from two different lateral directions,

(2) Do not allow the sprayer to ride on the pavement surface,

(3) Ensure the sprayer covers the entire lane width and atomizes the curing compound, and

(4) If puddling, dripping, or non-uniform application occurs, suspend the operation to perform corrections as approved by the Engineer.

Use a fully-automatic, self-propelled mechanical power sprayer equipped with the following to apply curing compound as approved by the Engineer:

(1) A re-circulating bypass system that provides for continuous agitation of the reservoir material,

(2) Separate filters for the hose and nozzle,

(3) Check valve nozzles,

(4) Multiple or adjustable nozzle system that provides for variable spray patterns,

(5) A shield to control loss of material by wind action, and

(6) A spray bar drive system that operates independently of the wheels or track drive system.

The Engineer will permit an airless spraying machine for applying the curing compound on pavements that are 10 feet (**3 m**) or less in width and irregular shaped surfaces that comply with the following:

(1) A re-circulating bypass system that provides for continuous agitation of the reservoir material,

(2) Separate filters for the hose and nozzle, and

(3) Multiple or adjustable nozzle system that provides for variable spray patterns.

J.1.b Blanket Curing Method

After completion of the finishing operations and without marring the concrete, cover the concrete with curing blankets. Install in a manner that envelops the exposed concrete and prevents loss of water vapor. After the concrete has cured, apply membrane curing compound to the concrete surfaces that will remain exposed in the completed work.

J.2 Protection Against Rain

Protect the concrete from damage due to rain. Have available, near the site of the work, materials for protection of the edges and surface of concrete. Should any damage result, the Engineer will suspend operations until corrective action is taken and may subject the rain-damaged concrete to 1503 and 1512.

J.3 Protection Against Cold Weather

If the national weather service forecast for the construction area predicts air temperatures of 36 °F [1 °C] or less within the next 24 h and the Contractor wishes to place concrete, submit a cold weather protection plan.

Protect the concrete from damage including freezing due to cold weather. Should any damage result, the Engineer will suspend operations until corrective action is taken and may subject the damaged concrete to 1503 and 1512.

J.3.a Cold Weather Protection Plan

Submit a proposed time schedule and Plans for cold weather protection of concrete in writing to the Engineer for acceptance that provides provisions for adequately protecting the concrete during placement and curing. Do not place concrete until the Engineer accepts the Contractor's cold weather protection plans.

J.4 Vibratory and Backfilling Protection

Protect newly placed concrete from damage by adjacent vibratory or backfilling operations for a minimum of 24 hours. Resume vibratory and backfilling operations after the concrete has reached a minimum compressive strength of 2000 psi [13.7 MPa] or a flexural strength of 250 psi [1.7 MPa]. Cast concrete control specimens in accordance with 2461.4A5. The Engineer will test the control specimens. If the Engineer discovers evidence of damaged concrete, the Engineer will suspend work until the Contractor corrects the work. The Engineer may reject damaged concrete in accordance with 1503, "Conformity with Plans and Specifications" and 1512, "Unacceptable and Unauthorized Work."

The Contractor may use hand operated concrete consolidation equipment, walk behind vibratory plate compactors, rollers in "static" mode, and fine grading machines 24 h after placing the concrete, and other equipment as approved by the Engineer in conjunction with the Concrete Engineer.

K Removal of Forms

Do not remove side forms of pavement and back forms on integrant curb earlier than 12 h after placing the concrete, unless otherwise approved by the Engineer. Remove forms without exerting shock or strain, including temperature variations, on the pavement or curb. Cure concrete in accordance with 2301.3.J.1.a.

L Joint Sealing

Provide an approved sealant in accordance with 3725 and listed on the MnDOT Approved Products List, unless the type of sealant for contraction joints is otherwise specified in the Contract.

Do not seal joints with silicone in accordance with 3722 if the concrete mixture contains Class B coarse aggregate as defined in 3137.

Perform joint sealing as shown on the Plans and in accordance with the following:

(1) Seal joints after the Engineer inspects and approves the joints,

(2) Perform joint sealing on surface dry concrete after cleaning the joints of debris, dirt, dust, and other foreign matter, including accumulations of concrete,

(3) Lightly sandblast the joint walls before final compressed air cleaning,

(4) Immediately before sealing the joints, clean the joints with a jet of compressed air under pressure of at least 85 psi [580 kPa],

(5) Seal transverse integrant curb joints with the same joint sealer used to seal the pavement joints,

(6) Seal joints in accordance with the tolerances shown on the plans,

(7) Provide backer rod material compatible with the sealer as shown on the plans, and

(8) Remove and replace sealer at joints filled above the permissible level as shown on the Plans at no additional cost to the Department.

Handle and place joint sealer material as recommended by the manufacturer and in accordance with the following requirements:

L.1 Hot Poured Sealers

Heat hot poured sealers in a double-boiler type kettle or melter. Fill the space between inner and outer shells with oil or other material as allowed by the Manufacturer. Provide heating equipment with automatic temperature control, mechanical agitation, and recirculating pump. Use heating equipment as recommended by the manufacturer of the sealer material. Do not melt quantities of sealer material greater than the quantity used within the same day. After heating the sealer material to the application temperature, maintain the material temperature until placement. Place the sealer material within 4 h after the initial heating to the application temperature.

Apply sealant to the pavement at ambient pavement temperatures greater than 39° F [4° C].

L.2 Silicone Sealers

Install silicone sealers as recommended by the manufacturer.

L.3 Preformed Sealers

Provide preformed seals in one continuous length for each joint, except the Contractor may use butt splices in transverse joints at longitudinal joints.

Do not stretch the preformed sealer material in the installation process by greater than 5 percent of the joint length.

M Workmanship and Quality

M.1 Defective Pavement

The Department will pay for concrete pavement meeting the requirements and tolerances in accordance with this section at the Contract unit price. Pavement that fails to meet the minimum requirements when tested in the prescribed manner is considered defective. The Department may reject or adjust the payment for defective concrete pavement in accordance with 1503, “Conformity with Plans and Specifications” and 1512, “Unacceptable and Unauthorized Work.”

The Engineer will determine the limits of each individual defective pavement area. If adjusting the price for defective payment, the Engineer will measure the area to the nearest whole square yard [square meter], except the Engineer will consider areas less than 1 sq. yd defective area of pavement based on the calculation of greatest deficiency within that area.

M.2 Random or Uncontrolled Cracking

Repair or replace pavement with random or uncontrolled cracks as directed by the Engineer. If repairing the pavement as directed by the Engineer, use a dowel bar load transfer technique in accordance with the Department’s Concrete Pavement Rehabilitation Details on the Department’s website. Submit the intended repair technique to the Engineer for approval. Perform pavement repairs at no additional cost to the Department. If the repair fails, replace the pavement at no additional cost to the

Department. The Engineer will accept repairs in accordance with 1516, "Acceptance of Work."

M.3 Pavement Smoothness – IRI (International Roughness Index)

Provide concrete pavement smoothness in accordance with 2399.

N Thickness Requirements

Provide pavement with a finished pavement thickness as shown on the Plans or as modified, in writing, by the Engineer.

N.1 Procedure

Construct pavement to the thickness shown on the plans. On each Project and on each roadbed of a divided highway, evaluate pavement thickness in accordance with the following:

(1) Contractor Quality Control Probing (QCP),

(2) Probe Verification Core (PVC), and

(3) Quality Acceptance Core (QAC).

The Department defines plan thickness lot (PTL) as concrete pavement of the same thickness added together lineally. Establish a separate PTL for each concrete plan thickness on the Project.

The Department defines a sublot as the rate at which an individual measurement is taken over a given length. The Department considers a sublot as one lane wide, measured in accordance with the following:

(1) From the pavement edge to the adjacent longitudinal joint,

(2) From one longitudinal joint to the next, or

(3) In the absence of a longitudinal joint, between pavement edges.

(4) Each ramp and loop 18ft (5.5 m) wide or less is considered a single lane.

The Engineer will divide the PTL into sublots of 4,000 lineal lane ft [3,300 lineal lane m] to determine the QCP, PVC, and QAC locations. The Engineer will add partial sublots less than 2,000 ft [1,650m] to the previous lot. The Engineer will consider partial sublots equal to or greater than 2,000 lineal lane ft [1,650 lineal lane m] as individual sublots. If the PTL for the entire Project is less than 4,000 lineal lane ft [3,300 lineal lane m] the Engineer will consider the PTL as an individual sublot.

The Engineer will identify the QCP, PVC, and QAC thickness measurement locations in accordance with the following:

(1) Determine the longitudinal locations using random numbers multiplied by length of the sublot.

(2) Determine the transverse offset locations using a random number multiplied by the width of the traffic lane, ramp, or loop at the determined longitudinal location.

(3) Adjust the location to ensure the Contractor takes no measurements within 1 ft [0.3 m] of the pavement edge and takes no measurements within 2 ft [0.60 m] of any transverse or longitudinal joint or other obstructions.

N.2 Contractor Quality Control Probing (QCP)

Measure the pavement thickness of freshly finished concrete pavement at a rate of at least four QCP measurements per sublot. Notify the Engineer before performing probing thickness measurements in the plastic concrete so they may inspect or observe the Contractor's QCP tests during the paving operations.

Provide daily summary reports listing the results of the day's QCP thickness measurements and additional probing results to the Engineer.

N.3 Contractor QCP Probing Equipment and Probing Method

Provide the following equipment as approved by the Engineer to perform QCP probing:

(1) Probing rod meeting the following characteristics and requirements:

(1.1) Non-flexing,

(1.2) Length capable of completely penetrating the pavement for measuring,

(1.3) Utilizes a circular or square top plate,

(1.4) Contains a centrally located hole in the top plate with a diameter allowing for easy maneuvering along the length of the probing rod, and

(1.5) Fitted with a locking device fixing the angle between the top plate and the probing rod at 90 degrees when locked.

(2) Base plate meeting the following characteristics and requirements:

(2.1) 10.5 in [267 mm] square 26 gage galvanized steel plates or 11.8 in [295 mm] diameter 28 gage high strength steel circular plates or,

(2.2) Rigid when in place, allowing the probing rod to be pushed against it without flexing, and

(3) Work bridge meeting the following characteristics and requirements:

(3.1) Spans the full width of the freshly laid concrete,

(3.2) Supports a person, and

(3.3) Height above the concrete allows for the use of the probing device.

(4) Tape measure accurate to nearest ⅛ in [even mm] and with a length capable of measuring the depth of penetration of the probing device into the plastic concrete pavement.

Perform probing in accordance with the following:

(1) Place the base plates at the randomly selected locations and anchor the plates to prevent movement during concrete placement. Mark the locations of the base plates to ensure ease of locating the plates after the paver has passed,

(2) Position the bridge at the selected locations to reach and locate each point,

(3) Assemble the probing device. Keeping the probing rod perpendicular to the pavement surface, insert the rod into the plastic concrete until the rod strikes the base plate,

(4) Slide the top plate down the probing rod until it contacts the pavement surface, then lock to the probing rod,

(5) Withdraw the probing device, and

(6) Measure the length of the probing rod inserted into the plastic concrete from the underside of the top plate to the end of the probing rod. Record this measurement to the nearest ⅛ in [even mm].

N.4 Quality Acceptance Testing – Coring

The Engineer will measure the pavement thickness of concrete for each sublot in accordance with the following:

(1) Probe Verification Core (PVC), and

(2) Quality Acceptance Core (QAC).

The Engineer will mark one of every four QCP measurement locations per sublot for a PVC. The Engineer will mark one QAC per sublot. The Contractor will core at the designated PVC and QAC locations.

N.5 PVC and QAC Coring Method

(1) Begin coring on concrete older than 7 days, when the control beams attain a flexural strength in accordance with Table 2301-1, or when the control cylinders attain a compressive strength of 3,000 psi [20.6 MPa]. Use 3U18 concrete or another concrete mix approved by the Engineer to fill the core holes within 72 h of coring at no additional cost to the Department. Provide traffic control for coring;

(2) Cut 4 in [100 mm] nominal diameter cores at marked locations. Lay the cores next to the holes in a curing condition. Protect the cores. Do not submit cores out of round, not perpendicular, or containing ridges;

(3) The Engineer will field measure the core thickness to the nearest ⅛ in [even mm], verify (Field ID Number) the cores, and record the field measurement on MnDOT Form 24327, “Field Core Report” or a computerized spreadsheet available on the MnDOT Concrete Engineering website;

(4) Pick up the cores, accompanied by the Engineer. Store the cores in a water tank heated from 60° F to 80° F [15° C to 25° C] at the Department field office. The Engineer will not require the storage of cores in a curing condition for concrete older than 28 days;

(5) The Engineer will transport the cores in a curing condition, unless older than 28 days, to the MnDOT Office of Materials and Road Research; and

(6) The MnDOT Office of Materials and Road Research will determine the pavement thickness by measuring the length of the PVC and QAC cores in accordance with the procedure on file at the MnDOT Office of Materials and Road Research. Following this procedure, the MnDOT Office of Materials and Road Research will

use nine probes interconnected in a hydraulic linkage to obtain the average length of the core in one operation. The MnDOT Office of Materials and Road Research will record the core length to the nearest 0.05 in [1 mm].

N.6 Non-conforming thickness

The Department will base acceptance of the pavement thickness and price adjustment for deficient thickness on the combination of both lab measured PVC and QAC coring.

The Department defines the tolerance limit for pavement thickness as the plan thickness lot (PTL) minus ½ in [13 mm]. If the QCP measurement shows a thickness deficiency greater than PTL minus ½ in [13 mm], take a core at the location of the deficient QCP. If any core thickness measurement (PVC or QAC) shows a thickness deficiency greater than PTL minus ½ in [13 mm], consider the pavement defective and take exploratory cores as directed by the Engineer.

The Department defines the defective pavement area as the entire area surrounding the deficient core within a traffic lane and between acceptable cores. The Department considers the pavement acceptable in the remaining areas as the increment where the cores show a thickness deficiency no greater than PTL minus ½ in [13 mm].

Take the first exploratory cores at any location within 10 ft [5 m] on each side of the deficient thickness location and at the same distance from the pavement centerline. Take an additional exploratory core in the adjacent traffic lane if the concrete was placed in the same operation. If the length of each of the first exploratory cores is at least equal to the PTL minus ½ in [13 mm], the Engineer will not require additional cores from this location. If any cores do not fall within the PTL minus ½ in [13 mm], take additional exploratory cores at 25 ft [10 m] intervals and at the same distance from the pavement centerline in the same lane as the original thickness measurement, as directed by the Engineer. Perform coring in the direction of the deficiency until obtaining a core with a length at least equal to the PTL minus ½ in [13 mm]. The Engineer will use exploratory cores to determine the extent of deficient pavement thickness for adjusting the unit bid price or requiring pavement removal and replacement.

For cores showing a pavement thickness greater than the PTL minus ½ in [13 mm] to 1 in [25 mm], the Contractor may choose one of the following:

(1) Remove and replace the defective pavement area, or

(2) Leave the pavement in place with a monetary deduction of $20 per sq. yd [$25 per sq. m] for the defective pavement area, as approved by the Engineer.

For cores showing a pavement thickness greater than PTL minus 1 in [25 mm], the Engineer, in conjunction with the Concrete Engineer, will determine whether the Contractor will remove and replace concrete pavement or leave the pavement in place at no cost to the Department and apply a monetary deduction of $20 per sq. yd [$25 per sq. m] for the defective pavement area in accordance with 1503.

The Engineer will use the PVC and QAC cores to determine the final average plan thickness lot (PTL), except for the following:

(1) If exploratory cores are taken to identify the defective pavement area, substitute the two outside exploratory cores that are within PTL minus ½ in [13 mm] for the deficient PVC or QAC.

(2) If the length of a PVC or QAC exceeds the by PTL plus 0.30 in [8 mm], the Engineer will limit the core length to the PTL plus 0.30 in [8 mm].

The Engineer will consider the pavement thickness as conforming provided the deficiency of the final average PTL does not exceed PTL minus 0.10 in [3 mm]. If the final average PTL is deficient by more than the PTL minus 0.10 in [3 mm], the Department will pay for the pavement in the PTL at the Contract unit price less the following monetary deductions in accordance with 1503 and Table 2301-14, excluding areas of defective pavement.

Table 2301-14
Deductions for Thickness Deficiencies

Thickness Deficiency Exceeding Permissible Deviations, in [mm]	Adjusted unit bid price per sq. yd [sq. m] of Payment
0.00 – ≤ 0.10 [≤ 3]	None (tolerance)
0.10 – ≤ 0.20 [3 – ≤ 5]	$0.20 [$0.25]
0.20 – ≤ 0.30 [5 – ≤ 8]	$0.40 [$0.50]
0.30 – ≤ 0.40 [8 – ≤ 10]	$0.70 [$0.90]
0.40 – ≤ 0.50 [10 – ≤ 13]	$1.00 [$1.25]
0.50 – ≤ 1.00 [13 – ≤ 25]*	$20.00 [$25.00]

* Perform exploratory coring as required by the Engineer.

After Department thickness verification, the Department will test all of the cores for compressive strength at 60 days of age. The Department will test three of the cores from the entire Project for rapid chloride permeability (RCP) in lieu of compressive strength testing for information only.

O Opening Pavement to Traffic

Do not open a new pavement slab to general public traffic or operate paving or other heavy equipment on it until the concrete has attained an age of 7 days, or has reached a minimum flexural strength meeting the requirements of Table 2301-15 or minimum compressive strength of 3000 psi (**20.6 Mpa**), as approved by the Engineer. If the pavement joints are widened, seal the joints before operating paving or other heavy equipment and general public traffic on the pavement.

Cast the control specimens in accordance with 2461.4A5. Cure the control specimens in the same manner and under the same conditions as the pavement represented. The Engineer will test the control specimens in accordance with 2461.4A5.

Table 2301-15
Minimum Strength Requirements for Opening Pavements to Construction and to General Public Traffic

Slab Thickness, *in [mm]*	Flexural Strength, *psi [Mpa]*
≤7.0 [175]	500 [3.4]
7.5 [190]	480 [3.3]
8.0 [200]	460 [3.2]
8.5 [215]	440 [3.0]
9.0 [225]	390 [2.7]
≥ 9.5 [240]	350 [2.4]

Perform operations on new pavement as approved by the Engineer and in accordance with the following:

(1) Construct a ramp to prevent damage to the pavement slab when moving on and off the pavement,

(2) Operate the paving equipment on protective mats to prevent damage to the pavement surface and joints. Sweep the pavement surface free of debris before placing the protective mats, and

(3) Operate equipment on a slab without causing damage. If damage results, suspend operations and take corrective action as approved by the Engineer. Do not operate the equipment wheels or tracks within 4 in [100 mm] of the slab edge.

2301.4 METHOD OF MEASUREMENT

A Concrete Pavement

If the Contract includes the Contract item *Concrete Pavement*, the Engineer will measure in accordance with the following:

(1) Measure the concrete pavement placed to a uniform cross-section thickness by the surface area of the pavement as constructed, including integrant curb;

(2) Verify the pavement thickness based on the final measurement of cores;

(3) Include measurements for concrete pavement without regard to grade, strength, or type of concrete, width, or thickness of the pavement in a single measurement, except if the Plans include a Contract item for high-early strength concrete; and

(4) Apply incentive or disincentive for *Concrete Pavement* based on the theoretical volume of concrete used, by multiplying the measured square yard [square meter] of concrete by the thickness shown on the plans.

B.1 Structural Concrete

If the Contract includes the Contract item *Structural Concrete*, the Engineer will measure in accordance with the following:

(1) Measure structural concrete placed to a variable cross-section thickness by volume;

(2) Verify the volume measurements from the computerized batch ticket printouts from the plant, as verified by cement cutoffs and the consideration of any waste;

(3) Include the volume of all specified concrete pavements into a single item without regard to grade, strength, width, or thickness of the concrete pavement, except if the Plans include a Contract item for high-early strength concrete, and

(4) Apply incentives or disincentives for *Structural Concrete* based on the cubic yard [cubic meter].

C Supplemental Pavement Reinforcement

The Engineer will measure supplemental pavement reinforcement over culverts, storm sewers, and water mains, by weight.

D Expansion Joints

The Engineer will separately measure dowelled expansion joints of each design designation as shown on the Plans by length along the joint line.

E Reinforcement Bars

The Engineer will not separately measure keyway bars, tie bars, taper steel, stopper bars, and other reinforcement bars.

F Integrant Curb

The Engineer will separately measure integrant curb of each design by length.

G Dowel Bars

The Engineer will measure dowel bars by the actual number of individual dowels placed. The Engineer will not measure dowels included in the Contract linear foot [meter] price for *Dowelled Expansion Joints, Design* ___.

H Concrete Coring

The Engineer will not separately measure the number of cores taken, identified, and delivered as required by the Contract or directed by the Engineer.

2301.5 BASIS OF PAYMENT

A Concrete Pavement

Unless the Plans include a separate Contract item for work incidental to *Concrete Pavement*, the Contract square yard [square meter] price for C*oncrete Pavement* includes the cost of constructing the pavement, including the cost of batch materials and mixing operations; plant lab-office; producing the concrete; fine grading; forming, including all headers; furnishing and installing keyway and keyway bars, tie bars, taper steel, stopper bars, and other reinforcement bars; delivering; depositing; placing; spreading; screeding; vibration monitoring; finishing; curing; and protecting the concrete.

If the Plans include a separate Contract item for *Concrete Pavement High-Early* or if the Contractor requests high-early and the Engineer approves, the Department will not provide extra compensation for the production of high-early strength concrete. The Contract square yard [square meter] price for *Concrete Pavement High-Early* includes the cost of constructing the pavement, including the cost of batch materials and mixing operations; plant lab-office; producing the concrete; fine grading; forming, including all headers; furnishing and installing keyway bars, tie bars, taper steel, stopper bars, and other reinforcement bars; delivering; depositing; placing; spreading; screeding; vibration monitoring; finishing; curing; and protecting the concrete.

If the Plans do not include a separate Contract item for *Concrete Pavement High-Early* and the Engineer orders high-early concrete, the Department will pay for the additional cement at a rate of the invoice cost plus 15 percent.

B Place Concrete Pavement

Unless the Plans include a separate Contract item for work incidental to *Place Concrete Pavement*, the Contract square yard [square meter] price for *Place Concrete Pavement*

includes the cost of constructing the pavement, including fine grading; forming, including all headers; furnishing and installing keyway and keyway bars, tie bars, taper steel, stopper bars, and other reinforcement bars; placing; spreading; screeding; vibration monitoring; finishing; curing; and protecting the concrete.

B.1 Structural Concrete

The Engineer will field calculate the volume of *Structural Concrete* and *Structural Concrete High Early* placed. Due to variations in the asphalt or asphalt bond breaker layer, the Contractor may request additional volume up to 102 percent of the Engineer's field calculated volume of *Structural Concrete*, *Structural Concrete High Early*¸ or both. The Engineer will verify additional volume of concrete from the computerized batch ticket printouts from the plant, with consideration of any waste. If the Engineer finds the Contractor's request for the additional volume valid, the Engineer will pay for the additional volume up to 102 percent of the calculated quantity. The Contract cubic yard [cubic meter] price for *Structural Concrete* and *Structural Concrete High-Early* includes the cost of producing, delivering, and depositing the concrete, including the cost of the batch materials and mixing operations and the plant-lab office. If the Plans include a separate Contract item for *Structural Concrete High-Early* or if the Contractor requests high-early and the Engineer approves, the Department will not provide extra compensation for the production of high-early strength concrete.

If the Plans do not include a separate Contract item for *Concrete Pavement High-Early* and the Engineer orders high-early concrete, the Department will pay for additional cement at a rate of the invoice cost plus 15 percent.

C Other Concrete Items

The Contract pound [kilogram] price for *Supplemental Pavement Reinforcement* includes the cost of furnishing and placing the metal reinforcement, including tie wires, supporting devices, and splicing.

The Contract linear foot [meter] price for *Dowelled Expansion Joints, Design* ___ includes the cost of constructing the joints complete in place as shown on the plans, including the costs of furnishing and placing dowel bar assemblies, filler, and sealer materials.

The Contract linear foot [meter] price for *Integrant Curb, Design* ___ includes the cost of forming and finishing the curb and protecting and curing the concrete.

The relevant Contract unit price for *Concrete Pavement* or *Place Concrete Pavement* includes the cost of coring, including the cost of material, labor, equipment, delivery, core hole filling, and traffic control.

The Department will pay for concrete pavement on the basis of the following schedule:

Item No.:	Item:	Unit:
2301.604	Concrete Pavement ___ in [___ mm]	square yard [square meter]
2301.604	Concrete Pavement ___ in [___ mm] High-Early	square yard [square meter]
2301.604	Place Concrete Pavement ___ in [___ mm]	square yard [square meter]
2301.511	Structural Concrete	cubic yard [cubic meter]
2301.513	Structural Concrete High-Early	cubic yard [cubic meter]
2301.608	Supplemental Pavement Reinforcement	pound [kilogram]
2301.603	Dowelled Expansion Joints, Design ___	linear foot [meter]
2301.538	Dowel Bar	each
2301.541	Integrant Curb, Design ___	linear foot [meter]

S-73 (2301) HIGH PERFORMANCE DOWEL BAR – 38 mm (1.5 inch)

This work shall consist of furnishing and installing dowels in accordance with the applicable MnDOT Standard Specifications and one of the following options:

(A) 316L Stainless Steel Clad Bars having a finished (smooth) surface with a minimum outside diameter of 38 mm (**1.5 inches**) and a length of 381 mm (**15 inches**). The bars shall have a 1.5 mm (**0.06 inch**) minimum thickness cladding over Grade 60 minimum carbon steel.

(B) 316L Stainless Steel Tubes having a finished (smooth) surface with a minimum outside diameter of 38 mm (**1.5 inches**) and a length of 381 mm (**15 inches**). The tubes shall have a minimum wall thickness of 1.5 mm (**0.06 inch**) and shall be press-filled with a Grade 60 minimum carbon steel. A lubricant or adhesive or epoxy shall be used between the tube and the carbon steel to fill any voids.

(C) 316L Stainless Steel Tubes having a finished (smooth) surface with a minimum outside diameter of 38 mm (**1.5 inches**) and a length of 381 mm (**15 inches**). The tubes shall have a minimum wall thickness of 3.0 mm (**0.12 inches**) and shall be filled with polyester resin, vinyl-ester resin, or Portland cement grout with a minimum compressive strength of 34 MPa (**5000 pounds per square inch**).

(D) 316L Stainless Steel Schedule 40 Pipes conforming to ASTM A312 shall have a finished (smooth) surface with a minimum nominal size of 32 mm (**1.25 inches**) and a length of 381 mm (**15 inches**). The stainless steel pipe shall have a wall thickness of 3.5 mm (**0.14 inches**). The pipe shall be filled with a durable material or have snug-fitting end caps to prohibit any intrusion of concrete or other materials.

(E) 316L Solid Stainless Steel Bars having a finished (smooth) surface with a minimum outside diameter of 38 mm (**1.5 inches**) and a length of 381 mm (**15 inches**).

(F) Rolled Zinc Alloy (U.N.S. Z41121) Bars having a finished (smooth) surface with a minimum outside diameter of 38 mm (1.5 inches) and a length of 381 mm (15 inches). The bars shall have a 1.0-mm (0.040 inch) minimum thickness over Grade 60 (minimum) carbon steel.

S-73.1 All stainless steel type and zinc alloy-clad dowel bars shall be approved by the Agency Concrete Engineer.

S-73.2 Only one stainless steel type or zinc alloy-clad dowel bar option will be allowed per Project; intermixing of different dowel types will not be allowed. Substitutions will not be allowed unless specifically approved by the Agency Concrete Engineer.

S-73.3 MEASUREMENT AND PAYMENT

Measurement will be made by the number of dowels installed as specified. Payment will be made under Item 2301.602 (38 mm (1.5”) Dowel Bar (Stainless Steel Type))) at the Contract bid price per each, which shall be payment in full for all costs incidental thereto.

S-74 (2301) HIGH PERFORMANCE DOWEL BAR – 32 mm (1.25 inch)

This work shall consist of furnishing and installing dowels in accordance with the applicable MnDOT Standard Specifications and one of the following options:

(A) 316L Stainless Steel Tubes having a finished (smooth) surface with a minimum outside diameter of 32 mm [**1.25 inches**] and a length of 381 mm [**15 inches**]. The tubes shall have a minimum wall thickness of 1.5 mm [**0.06 inch**] and shall be press-filled with a Grade 60 minimum carbon steel. A lubricant, adhesive or epoxy shall be used between the tube and the carbon steel to fill any voids.

(B) 316L Stainless Steel Tubes having a finished (smooth) surface with a minimum outside diameter of 32 mm [**1.25 inches**] and a length of 381 mm [**15 inches**]. The tubes shall have a minimum wall thickness of 3.0 mm [**0.12 inches**] and shall be filled with polyester resin, vinyl-ester resin, or Portland cement grout with a minimum compressive strength of 34 MPa [**5000 pounds per square inch**].

(C) 316L Solid Stainless Steel Bars having a finished (smooth) surface with a minimum outside diameter of 32 mm [**1.25 inches**] and a length of 381 mm [**15 inches**].

(D) Rolled Zinc Alloy (U.N.S. Z41121) Bars having a finished (smooth) surface with a minimum outside diameter of 32 mm [**1.25 inches**] and a length of 381 mm [**15 inches**]. The bars shall have a 1.0-mm [**0.040 inch**] minimum thickness over Grade 60 (minimum) carbon steel.

S-74.1 All stainless steel type and zinc alloy dowel bars shall be approved by the Agency Concrete Engineer.

S-74.2 Only one stainless steel type or zinc alloy dowel bar option will be allowed per Project; intermixing of different dowel types will not be allowed. Substitutions will not be allowed unless specifically approved by the Agency Concrete Engineer.

S-74.3 MEASUREMENT AND PAYMENT

Measurement will be made by the number of dowels installed as specified. Payment will be made under Item 2301.602 (32 mm (1.25") Dowel Bar (Stainless Steel Type))) at the Contract bid price per each, which shall be payment in full for all costs incidental thereto.

S-75 (2357) BITUMINOUS TACK COAT

The provisions of Mn/DOT 2357 are hereby deleted and replaced with the following:

2357.1 DESCRIPTION

This work shall consist of the application of bituminous material (emulsion or liquid asphalt) on a bituminous or concrete pavement prior to paving a new lift of Hot Mixed Asphalt.

2357.2 MATERIALS

A Bituminous Material 3151

The bituminous material for tack coat will be limited to one of the following kinds of emulsified asphalt. However, the Engineer may authorize the use of medium cure cutback asphalt (MC-250) during the early and late construction season when it is anticipated the air temperature may drop below 32 degrees Fahrenheit.

Allowable grades are as follows:

Emulsified Asphalt

Anionic..... SS-1, SS-1h

Cationic CSS-1, CSS-1h

Cutback Asphalt

Medium Cure Liquid Asphalt..... MC-250

Only Certified Sources are allowed for use. Mn/DOT's Certified Source List is located at the following link: http://www.dot.state.mn.us/products/index.html.

2357.3 CONSTRUCTION REQUIREMENTS

A Restrictions

Tack coat operations shall be conducted in a manner that offers the least inconvenience to traffic, with movement in at least one direction permitted at all times without pickup or tracking of the bituminous material.

The tack coat shall not be applied when the road surface or weather conditions are unsuitable as determined by the Engineer. The daily application of tack coat shall be limited to approximately the area on which construction of the subsequent bituminous course can reasonably be expected to be completed that day.

B Equipment

The bituminous material shall be applied with a distributor meeting the requirements of 2321.3C1.

C Road Surface Preparations

At the time of applying bituminous tack coat material, the road surface shall be dry and clean and all necessary repairs or reconditioning work shall have been completed as provided for in the Contract and approved by the Engineer.

All objectionable foreign matter on the road surface shall be removed and disposed of by the Contractor as the Engineer approves.

Preparatory to placing an abutting bituminous course, the contact surfaces of all fixed structures and the edge of the in-place mixture in all courses at transverse joints and in the wearing course at longitudinal joints shall be given a uniform coating of liquid asphalt or emulsified asphalt, applied by methods that will ensure uniform coating.

D Application of Bituminous Tack Coat Material

Unless otherwise indicated in the plans or provisions, the bituminous tack coat material shall be applied within the application rates shown below in Table 2357.3-D as based on pavement type or condition and type of bituminous material. The Engineer shall approve the time and rate of application. Only a Mn/DOT certified asphalt emulsion supplier is allowed to dilute the emulsion. When diluted, the supplier shall provide asphalt emulsion diluted 1 part emulsion to 1 part water. Dilution of asphalt emulsion in the field is not allowed. The Engineer may waive the tack coat requirement when multiple lifts are paved on the same day.

Table 2357.3-D
Tack Coat Application Rates

Pavement Type or Condition	Application Rate, liter/square meter **[gallons/sy]**		
	Undiluted Emulsion SS-1, SS-1H, CSS-1, CSS-1H	Diluted Emulsion (1 part Emulsion to 1 part water) [1] SS-1, SS-1H, CSS-1, CSS-1H	MC Cutback[2] MC-250
New HMA	0.14 – 0.23 **[0.03 – 0.05]**	0.28 – 0.46 **[0.06 – 0.10]**	0.14 – 0.23 **[0.03 – 0.05]**
Aged HMA[3] or Un-milled PCC	0.23 – 0.37 **[0.05 – 0.08]**	0.46 – 0.69 **[0.10 – 0.15]**	0.23 – 0.37 **[0.05 – 0.08]**
Milled HMA or Milled PCC	0.32 – 0.46 **[0.07 – 0.10]**	0.64 – 0.92**[0.14 – 0.20]**	0.32 – 0.46 **[0.07 – 0.10]**

1- As provided by the asphalt emulsion supplier
2- When approved by the Engineer
3- Older than 1 year

The temperature of the bituminous material at the time of application shall be approved by the Engineer, within the limits specified following:

SS-1, SS-1H, CSS-1, CSS-1H ..... 21 to 71ºC (**70 to 160º F**)

MC-250 .....……..... 74 to 104ºC (**165 to 220º F**)

Unless otherwise directed, sand shall be spread on the newly tacked surface at pedestrian crossings.

2357.4 METHOD OF MEASUREMENT

A Bituminous Material

Bituminous material used for tack coat will be measured by volume at 15°C (**60° F)**.

2357.5 BASIS OF PAYMENT

All costs of furnishing and applying bituminous tack coat material will be incidental with no direct compensation being made therefore.

S-76 (2360) PLANT MIXED ASPHALT PAVEMENT

MnDOT 2360 is hereby deleted from the MnDOT Standard Specifications and replaced with the attached **2360 (Plant Mixed Asphalt Pavement) Specification (March 5, 2012)**.

S-76.1 Mix Designation Numbers for the bituminous mixtures on this Project are as follows:

Type SP 12.5 Wearing Course	SPWEB340C
Type SP 12.5 Wearing Course	SPWEB540F
Type SP 12.5 Non-Wearing Course	SPNWB430B

S-76.2 The allowable percentages of Recycled Asphaltic Pavement Materials (RAP) are as follows:

The maximum percentage of recycled asphaltic pavement allowed on this project is a maximum of 30 percent on all NON-WEARING courses.

The maximum percentage of recycled asphaltic pavement allowed on this project is a maximum of 20 percent in all WEARING courses.

S-76.3 The roller requirements of 2360.3B2e are supplemented with the following:

One pneumatic tired roller is required for intermediate rolling for all lift thicknesses at all temperatures and at all times unless otherwise directed by the Engineer. Two steel rollers (breakdown and finish) are required at all times unless otherwise directed by the Engineer.

S-76.4 The minimum air temperature requirement for placing WEARING course is 41 °F unless otherwise approved by the Engineer.

S-76.5 The provisions of Mn/DOT 2399 (Pavement Smoothness) will not apply to the **bituminous** pavements on this Project. The final **bituminous** pavement surfaces are excluded from smoothness testing, but will be subject to the surface requirements of 2360 and the following:

The Engineer will allow variations less than or equal to ¼ in. within the span of a 10 ft. straightedge in the longitudinal or transverse direction to remain in place without correction or penalty. The Engineer will require corrective work on surface deviations greater than ¼ in. within the span of the straightedge in any direction. For corrected variations, the Engineer will accept deviations less than or equal to ¼ in. within the span of a 10 ft. straightedge in any direction.

S-76.6 The first paragraph of 2360.3.D.1 of the attached 2360 (Plant Mixed Asphalt Pavement) Specification is hereby deleted and replaced with the following:

D.1 Maximum Density

Compact the pavement to at least the minimum required maximum density values in accordance with Table 2360-19, “Required Minimum Lot Density (Mat)”.

S-76.7 Table 2360-20 Longitudinal Joint Density Requirement of the attached 2360 (Plant Mixed Asphalt Pavement) Specification is hereby deleted.

S-76.8 2360.3.D.1.h Mat Density Cores of the attached 2360 (Plant Mixed Asphalt Pavement) Specification is hereby deleted and replaced with the following:

D.1.h Mat Density Cores

Obtain four cores in each lot. Take two cores from random locations as directed by the Engineer. Take the third and fourth cores, the companion cores, within 1 ft [0.3 m] longitudinally from the first two cores. Submit the companion cores to the Engineer immediately after coring and sawing. If the random core location falls on an unsupported joint, at the time of compaction, (the edge of the mat being placed does not butt up against another mat, pavement surface, etc.) cut the core with the outer edge of the core barrel 0.3 meters [1 foot] away (laterally) from the edge of the top of the mat (joint). If the random core location falls on a confined joint (edge of the mat being placed butts up against another mat, pavement surface, curb and gutter, or fixed face), cut with the outer edge of the core barrel 150 mm ± 12.5 mm [6 inches ± 0.5 inch] from the edge of the top of the mat (ex. center of 100 mm [4 inch] core barrel 200 mm ± 12.5 mm [8 ± 0.5 inches] from the edge of the top of the mat). Cores will not be taken within 300 mm [1 foot] of any unsupported edge. The Contractor is responsible for maintaining traffic, coring, patching the core holes, and sawing the cores to the paved lift thickness before density testing.

The Engineer may require additional density lots to isolate areas affected by equipment malfunction, heavy rain, or other factors affecting normal compaction operations.

S-76.9 2360.3.D.1.j Companion Core Testing of the attached 2360 (Plant Mixed Asphalt Pavement) Specification is hereby deleted and replaced with the following:

The Department will select at least one of the two companion cores per lot to test for verification.

S-76.10 2360.3.D.1.n Longitudinal Joint Density of the attached 2360 (Plant Mixed Asphalt Pavement) Specification is hereby deleted.

S-76.11 2360.3.D.1.p Shoulders of the attached 2360 (Plant Mixed Asphalt Pavement) Specification is hereby deleted.

S-76.12 Table 2360-24 Payment Schedule for Longitudinal Joint Density (SP Wear and SP Shoulders, 4% Void) of the attached 2360 (Plant Mixed Asphalt Pavement) Specification is hereby deleted.

S-76.13 Table 2360-25 Payment Schedule for Longitudinal Joint Density (SP Non-wear and SP Shoulders, 3% Void) of the attached 2360 (Plant Mixed Asphalt Pavement) Specification is hereby deleted.

S-76.14 2360.3.D.1.r Pay Factor Determination of the attached 2360 (Plant Mixed Asphalt Pavement) Specification is hereby deleted.

S-76.15 The requirements of 2360.3E1 (Lift Thickness) for this project are deleted from the Proposal.

S-77 (2399) PAVEMENT SURFACE SMOOTHNESS

The following is hereby added to the MnDOT Standard Specifications:

2399.1 DESCRIPTION

This work consists of measuring the smoothness of the final concrete or bituminous surface.

A Definitions

The Department defines "smoothness" as the composite International Roughness Index (IRI) value per 0.1 mi [0.1609 km] segment. The Department defines "areas of localized roughness" (ALR) as areas greater than or equal to the limiting criteria for a continuous IRI calculation with a 25 ft [7.62 m] interval, as calculated using the FHWA's Profile Viewing and Analysis (ProVAL) software.

2399.2 MATERIAL REQUIREMENTS

A Inertial Profiler (IP)

Provide a Department certified, calibrated, and documented IP meeting the requirements of ASTM E 950, Class 1 and procedures maintained by the MnDOT Pavement Engineering Section. Refer to the procedures maintained by the MnDOT Pavement Engineering Section or to the MnDOT Smoothness website for the required settings for individual certified profilers.

Provide an IP capable of producing a profilogram and exporting raw profile data in an unfiltered electronic Engineering Research Division (ERD) file format. Produce ERD filenames in the YYMMDD-T-N-D-L-W-S.ERD standardized format in accordance with Table 2399-1:

Table 2399-1
Electronic ERD File Standardized Naming Convention

Abbreviation	Definition
YY	Two-digit year
MM	Month (include leading zeros)
DD	Day of month (include leading zeros)
T	Route type (I, MN, US, CSAH, etc.)
N	Route number (no leading zeros) and auxiliary ID (if applicable, for example E, W, etc.)
D	Primary route direction (I or D)
L	Lane number (1 for driving lane, increasing by one for each lane to the left)
W	Wheel path (L, R, or B, indicating Left, Right, or Both)
S	Beginning station

B Profile Analysis Software

Use ProVAL software to conduct a profile analysis to determine smoothness and areas of localized roughness. Report IRI values in units of in per mi to one digit right of the decimal [m per km to two digits right of the decimal] in accordance with conventional rounding procedures.

C Operator Certification

Provide an operator, trained in the operation of the particular IP in accordance with 2399.2.A, "Inertial Profiler," and knowledgeable in the use of the required profile

analysis software in accordance with 2399.2.B, “Profile Analysis Software.” Ensure profiler operators pass a proficiency test and possess a current certification issued by the Department. The Contractor may access a list of certified operators on the MnDOT Smoothness website. Provide documentation of operator certification to the Engineer.

D Submittals

D.1 Before Profiling

Provide the Engineer with current, valid documentation, issued by the Department, indicating the inertial profiling equipment certification and the operator’s certification.

D.2 Day of Profiling

Submit a printout containing the inertial profiler’s settings, each segment’s IRI values, and the signature of the operator to the Engineer on the same day of the profiling.

Submit electronic files in ERD format representing the raw data from each pass on the same day of the profiling.

If the Contractor fails to submit actual data to the Engineer on the day of profiling, the Department will require the Contractor to reprofile the measured segments.

D.3 Upon Completion of Pavement Placement

Within 5 calendar days after all pavement placement and before beginning corrective work, submit a paper ProVAL summary report for each lane, indicating the results of the “Ride Quality” and “Smoothness Assurance” analyses. Use the ERD filenames in accordance with 2399.2.A, “Inertial Profiler” to create ProVAL summary reports.

If the summary reports indicate no areas of localized roughness, submit a final spreadsheet summary in accordance with 2399.2.D.5, “After Corrective Work.”

D.4 Before Corrective Work

If the summary reports indicate any areas of localized roughness, submit a written corrective work plan to the Engineer in accordance with 2399.3.E, “Corrective Work.” Include the beginning and ending points of locations planned for correction in the corrective work plan. Do not begin corrective work before the Engineer approves the plan.

If the Engineer elects to assess a monetary deduction for areas of localized roughness in accordance with Table 2399-7 instead of requiring corrective work, submit a final spreadsheet summary in accordance with 2399.2.D.5, “After Corrective Work.”

D.5 After Corrective Work

After reprofiling, submit a paper summary ProVAL report for each lane, indicating the results of updated “Ride Quality” and “Smoothness Assurance” analyses to the Engineer. Submit a spreadsheet summary in tabular form, with each 0.1 mi [0.1609 km] segment occupying a row to the Engineer. The Contractor may access an acceptable spreadsheet summary template in electronic form on the MnDOT Smoothness website.

2399.3 CONSTRUCTION REQUIREMENTS

Areas Excluded from Pavement Surface Testing Evaluation include CSAH 5, Williams Drive, and Frontage Roads but still require measurement with an IP, and are subject to evaluation for areas of localized roughness and; D.3 Straightedge Evaluation will apply.

Using an IP, measure the final mainline and other pavement surfaces for IRI in areas with a posted vehicle speed of 30 mph [48 km/hr] or greater unless otherwise excluded in Table 2399-3.

Unless otherwise approved by the Engineer, perform all smoothness testing in the presence of the Engineer. Mutually agree on a schedule for smoothness testing with the Engineer. Rerun tests performed in the absence of the Engineer as directed by the Engineer at no additional cost the Department.

The Engineer will use a 10 ft [3.05 m] straightedge to evaluate areas excluded from surface testing with the IP in accordance with Table 2399-3.

A Pavement Surface Testing

Remove objects and foreign material from the pavement surface before performing the pavement surface evaluation. Provide traffic control required for testing and performing corrective work on the final pavement surface.

Run the IP in the direction of traffic. Measure profiles in the left and right wheel paths of each lane.

Test and evaluate each lane separately. The Engineer will determine the length in miles [kilometers] of each mainline traffic lane. Operate the IP at the optimum speed as recommended by the manufacturer.

Separate each lane into segments 0.1 mi [0.1609 km] in length. Evaluate the remainder segment less than 0.1 mi [0.1609 km] in each lane as an independent segment. The Engineer will prorate pay adjustments for length.

Make each pass continuously, regardless of length, and end passes before exclusions in accordance with Table 2399-3, “Areas Excluded from Smoothness and ALR Evaluation.” Begin each subsequent pass 50 ft [15.24 m] before and including, concrete construction headers and bituminous end-of-day work joints. In concrete pavements, evaluate terminal headers tying into existing portland cement concrete pavement.

For percent improvement projects, measure the smoothness before the beginning of construction and after the completion of construction. Use the same stationing for the final smoothness measurement as the stationing used for the initial smoothness measurement, to allow for a direct comparison when calculating the percent improvement. Measure the initial IRI and the final IRI with the same IP.

The Engineer will use a 10 ft [3.05 m] straightedge to measure for surface deviations greater than ¼ in [6 mm] in 10 ft [3.05 m]. The Engineer will evaluate transverse joints by centering the straightedge longitudinally across the transverse joint.

B Exclusions

Table 2399-2 indicates areas that are excluded from smoothness evaluation, but still require measurement with an IP, and are subject to evaluation for areas of localized roughness and the 10 ft [3.05 m] straightedge. Table 2399-3 indicates areas that are excluded from surface testing with the IP, but are subject to evaluation with the 10 ft [3.05 m] straightedge.

Table 2399-2 Areas Excluded from Smoothness Evaluation
For All Pavements
Paving in areas with a posted vehicle speed less than or equal to 45 mph [73 km/hr]
Ramps and loops
Acceleration and deceleration lanes less than or equal to 1,000 ft [304.8 m] in length
Projects less than 1,000 ft [304.8 m] in length
Bridge decks and approach panels - the occurrence of bridges shall not interrupt the continuity determination)
For Bituminous Pavements
Single lift overlays over concrete
For Concrete Pavements
Intersections Constructed under traffic – begin and end exclusion 30.5 m [100 feet] from the intersection radius

Table 2399-3 Areas Excluded from Smoothness and ALR Evaluation
For All Pavements
Turn lanes, crossovers
10 ft [3.05 m] on either side of obstructions in lane that obstruction is located
Side streets, side connections
For Bituminous Pavements
Paved shoulders
Intersections where mainline profiles are merged or blended into the cross street profile – begin and end exclusion 100 ft [30.48 m] from the intersection radius
For Concrete Pavements
Undoweled shoulders less than 10 ft [3.05 m] in width
Headers adjacent to colored concrete

C Calculations

C.1 Smoothness

Obtain the IRI for the left and right wheel paths in an individual lane using the ProVAL "Ride Quality" analysis with the 250 mm filter. Calculate pavement smoothness for each lane by averaging the IRI for the left and right wheel paths in the lane. The Engineer will use the averaged results to determine pay adjustments.

For percent improvement projects, use the initial IRI and final IRI to calculate the percent ride improvement.

C.2 Areas of Localized Roughness

Identify ALR using the ProVAL "Smoothness Assurance" analysis, calculating IRI with a continuous short interval of 25 ft [7.62 m] with the 250 mm filter. Only use the right wheel path to determine ALR.

D Pay Adjustments

D.1 Smoothness

Evaluate smoothness requirements using the equations and criteria in accordance with the following tables:

(1) Table 2399-4 for bituminous pavements,

(2) Table 2399-5 for concrete pavements, and

(3) Table 2399-6 for percent improvement projects.

The Engineer will base pay adjustments on the segment IRI value (or percent improvement value, for percent improvement projects) measured at the completion of surface pavement, unless corrective work is required by the summary report results. If a segment is less than 100 ft [30.5 m] long and if Table 2399-4, Table 2399-5, or Table 2399-6 requires corrective work, the Engineer will waive the corrective work requirement for the segment and instead assess a prorated maximum disincentive. The Department will still subject the segment to ALR analysis in accordance with Table 2399-7

For segments requiring corrective work, reprofile the entire 0.1 mi [**0.1609 km]** segment after performing corrective work as directed by the Engineer and enter the reprofiled left and right wheel path IRI values into the final spreadsheet summary. Calculate the segment IRI value by averaging the IRI values calculated from the left and the right wheel path passes.

D.1.a Bituminous Pavements

The Engineer will use IRI Equation HMA-A for pavements with at least 3 layers, IRI Equation HMA-B for pavements with 2 layers, and IRI Equation HMA-C for single pavement layers.

Table 2399-4
Pay Adjustments for Bituminous Pavements

Equation	Composite IRI in/mi [m/km]	Pay Adjustment $/0.1 mi [0.1609 km]
HMA-A	< 30.0 [0.47]	400.00 [400.00]
	30.0 – 75.0 [0.47 – 1.18]	850.00 − 15.000 × IRI [850.00 − 957.450 × IRI]
	> 75.0 [1.18]	Corrective Work to ≤ 56.7 in/mi [0.89 m/km]
HMA-B	< 33.0 [0.52]	270.00 [270.00]
	33.0 – 85.0 [0.52 – 1.34]	600.00 − 10.000 × IRI [600.00 − 638.950 × IRI]
	> 85.0 [1.34]	Corrective Work to ≤ 60.0 in/mi [0.94 m/km]
HMA-C	< 36.0 [0.57]	180.00
	36.0 – 95.0 [0.57 – 1.50]	414.00 − 6.500 x IRI [414.00 − 410.500 x IRI]
	> 95.0 [1.50]	Corrective Work to ≤ 63.7 in/mi [1.01 m/km]

For bituminous projects, the Engineer will not pay a net incentive payment for smoothness if greater than 25 percent of all mainline density lots for the project fail to meet the minimum density requirements in accordance with 2360, “Plant-Mixed Asphalt Pavement.”

D.1.b Concrete Pavements

For concrete pavements, the Engineer will use equation PCC-A. For concrete pavement rehabilitation projects or concrete grinding, the Engineer will use equation PCC-B if the contract requires pay adjustments for concrete grinding.

Table 2399-5
Pay Adjustments for Concrete Pavements

Equation	Composite IRI in/mi [m/km]	Pay Adjustment $/0.1 mi [0.1609 km]
PCC-A	< 50.0 [0.79]	890.00 [890.00]
	50.0 – 90.0 [0.79 – 1.42]	2940.00 − 41.000 × IRI [2940.00 − 2597.800 × IRI]
	> 90.0 [1.42]	Corrective Work to ≤ 71.7 in/mi [1.13 m/km]
PCC-B	< 50.0 [0.79]	450.00 [450.00]
	50.0 – 71.2 [0.79 – 1.12]	1511.30 − 21.226 × IRI [1511.30 − 1344.900 × IRI]
	71.3 – 90.0 [1.13 – 1.42]	0.00
	> 90.0 [1.42]	Corrective Work to ≤ 71.3 in/mi [1.13 m/km]

D.1.c Percent Improvement Projects

The Engineer will base pay adjustments on the number of segments and the percent improvement values. The Engineer will not require corrective work and will not assess a negative pay adjustment if the initial segment IRI value is less than 60.0 in per mi [0.95 m per km] and the percent improvement is greater than zero. The Engineer will calculate the percent improvement in accordance with the following equation:

$$\%I = \left(\frac{InitialSegmentIRI - FinalSegmentIRI}{InitialSegmentIRI} \right) \times 100$$

Determine the Initial Segment IRI before patching or other repair. Determine the Final Segment IRI after the completion of paving.

Table 2399-6
Pay Adjustments for Percent Improvement Projects

Equation	Percent Improvement (%I)	Pay Adjustment, per $/0.1 mi [$/0.1609 km] segment
PI	> 64.0	180.00
	15.0 to 64.0	−236.00 + 6.500 × (%I)
	< 15.0	Corrective work to %I of at least 36.3

For bituminous percent improvement projects, the Engineer will not pay a net incentive payment for smoothness if greater than 25 percent of all mainline density lots for the project fail to meet minimum density requirements in accordance with 2360, “Plant-Mixed Asphalt Pavement.”

Correct segments with a percentage improvement of less than 15 percent at no additional cost to the Department as required by the Engineer.

D.2 Areas of Localized Roughness

The Engineer will evaluate areas of localized roughness (ALR) in accordance with Table 2399-7, "ALR Monetary Deductions and Corrective Work Requirements."

Table 2399-7
ALR Monetary Deductions and Corrective Work Requirements

Equation	25 ft [7.62 m] Continuous IRI, in/mi [m/km]	Corrective Work or Monetary Deduction, per linear 1.0 ft [0.3048 m]
HMA-A or HMA-B, and a posted vehicle speed > 45 mph [73 km/hr]	< 125.0 [1.97]	Acceptable
	≥ 125.0 [1.97] to < 175.0 [2.76]	Corrective work or $10.00, as directed by the Engineer
	≥ 175.0 [2.76] to < 250.0 [3.94]	Corrective work or $25.00, as directed by the Engineer
	≥ 250.0 [3.94]	Corrective work or $50.00, as directed by the Engineer
PCC-A or PCC-B, and a posted vehicle speed > 45 mph [73 km/hr]	< 125.0 [1.97]	Acceptable
	≥ 125.0 [1.97] to < 175.0 [2.76]	Corrective work or $10.00, as directed by the Engineer
	≥ 175.0 [2.76] to < 250.0 [3.94]	Corrective work or $25.00, as directed by the Engineer
	≥ 250.0 [3.94]	Corrective work as directed by Engineer
HMA-C, PI, ramps, loops, concrete intersections constructed under traffic, or any paving with a posted vehicle speed ≤ 45 mph [73 km/hr]	< 175.0 [2.76]	Acceptable
	≥ 175.0 [2.76] to < 250.0 [3.94]	$10.00
	≥ 250.0 [3.94]	$25.00

The Engineer will consider areas of localized roughness acceptable if the retested segment contains no areas of localized roughness. The Department will reduce payment for areas of localized roughness remaining after retesting as determined by the Engineer and in accordance with Table 2399-7, "ALR Monetary Deductions and Corrective Work Requirements."

D.3 Straightedge Evaluation

The Engineer will allow variations less than or equal to ¼ in [6 mm] within the span of the straightedge in the longitudinal or transverse direction to remain in place without correction or penalty. The Engineer will require corrective work on surface deviations greater than ¼ in [6 mm] within the span of the straightedge in any direction. For corrected variations, the Engineer will accept deviations less than or equal to ¼ in [6 mm] within the span of a 10 ft [3.05 m] straightedge in any direction.

E Corrective Work

Notify the Engineer at least 24 hr before beginning corrective work. Do not begin corrective work before the Engineer approves the methods and procedures in writing.

Perform corrective work using a surface diamond grinding device consisting of multiple diamond blades, unless otherwise approved by the Engineer. Fog-seal diamond ground bituminous surfaces as required by the Engineer and at no additional cost to the Department. Repair and replace joint sealant damaged by diamond grinding on concrete pavement as directed by the Engineer and at no additional cost to the Department.

The Contractor may correct bituminous pavements by overlaying the area or replacing the area by milling and inlaying as approved by the Engineer. If milling and inlaying or overlaying, perform work in accordance with 2399, "Pavement Surface Smoothness," over the entire length of the correction. If milling and inlaying or overlaying, use a transverse saw cut to begin and end the surface correction.

Perform smoothness corrective work for ALR across the entire lane width. Maintain the pavement cross slope through corrective areas.

Perform coring to determine if diamond grinding corrective work results in thin pavements, as directed by the Engineer. Provide additional coring for thickness verification at no additional cost to the Department. The Department may reduce the payment for thin pavement sections after diamond grinding. Handle residue and excess water resulting from diamond grinding in accordance with 1717, "Air, Land, and Water Pollution."

Perform surface corrections before placing permanent pavement markings. Replace permanent pavement marking damaged or destroyed by corrective work at no additional cost to the Department.

Reprofile segments containing corrected areas with the same certified IP in accordance with 2399.2.A, "Inertial Profiler" within 5 calendar days after the completion of corrective work required by the Engineer.

F Retesting

Perform retesting as directed by the Engineer and within 30 days of the original profiling.

If the retested IRI values differ from the original IRI values by greater than 10 percent, the Engineer will use the retested values as the basis for acceptance and pay adjustments. If the retested values differ from the original values by greater than 10 percent, the Department will not pay for the cost of retesting.

If the retested IRI values differ by less than or equal to 10 percent of the original IRI values, the Engineer will use the original values. If the Engineer verifies the accuracy of the original results, the Department will pay for retesting as directed by the Engineer, except for retesting required after corrective work, at $100.00 per lane mi [$62.14 per lane km] retested or $500.00, whichever provides the greater amount.

2399.4 METHOD OF MEASUREMENT — (BLANK)

2399.5 BASIS OF PAYMENT

The Department will include the cost of the IP, testing, and traffic control in the relevant contract unit price for wearing course mixture for bituminous pavements, concrete pavement for concrete pavements, or for concrete grinding.

S-78 (2406) BRIDGE APPROACH PANELS

Any references to bridge approach panels in MnDOT 2301 shall be deleted and replaced with the following:

2406 BRIDGE APPROACH PANELS

2406.1 DESCRIPTION

This work consists of constructing bridge approach panels.

2406.2 MATERIALS

A Concrete 2461

A1 Mix Designation ..... Mix No. 3A42

B Reinforcement Bars 3301

C Steel Fabric 3303

D Preformed Joint Filler 3702

E Curing Materials

E.1 Burlap Curing Blankets.....3751

E.2 Poly-Alpha Methylstyrene (AMS) Membrane Curing Compound.....3754

E.3 Linseed Oil Membrane Curing Compound 3755

E.4 Plastic Curing Blankets.....3756

F Granular Materials 3149

2406.3 CONSTRUCTION REQUIREMENTS

A Foundation Preparations

Excavate, shape, and compact the foundation to a firm, uniform bearing surface that conforms to the planned section and established grade shown on the Plans and in accordance with 2105.

B Forms

Provide forms made of non-reactive metal, wood, or other material in accordance with 1805 capable of maintaining the concrete until the concrete can retain the molded shape. Provide forms with a height at least equal to the approach panel thickness of the formed concrete as shown in the plans. Support the forms on the foundation to maintain the line and grade as shown on the plans.

On curves with a radius of 100 feet (**30 m**) or less, use flexible or curved forms of the radius as shown on the plans.

Before placing the concrete, coat the contact surfaces of all forms with form treating material conforming to 3902.

C Placing and Finishing Concrete

Immediately prior to placing the concrete, thoroughly wet the foundation and forms.

Place the concrete in a manner that will prevent segregation. Consolidate the concrete to fill voids using internal vibration. Strike-off the concrete to the required grade, and float the surface smooth.

After the water sheen has disappeared, provide the same surface texture as the bridge deck and construct in accordance with 2401 or 2404.

Finish all edges with a 3/8 inch (**10 mm**) radius edging tool.

Keep side forms in place for at least 12 hours after casting the concrete.

D Joint Construction

Place joints in accordance with the plans.

E Metal Reinforcement

Provide and place metal reinforcement as shown on the Plans and in accordance with 2472.

F Workmanship and Finish

Ensure completed concrete work is uniform in surface contour and texture and conforms to the lines and grades shown on the plans. Finish the flow line surface of gutters as necessary to eliminate low spots and avoid entrapment of water.

The Engineer will use a 10 ft [3 m] straight edge to measure the surface. The Engineer will consider horizontal or vertical irregularities of 3/8 in [10 mm] or greater in the surface of any 10 ft [3 m] length of the finished concrete approach panel as unacceptable work. Remove and replace extensive areas with deviations greater than ½ in [13 mm.] Remove and replace unacceptable work as directed by the Engineer.

If the Engineer does not direct removal of unacceptable work, the Contractor may leave the work in place and the Department will make the following adjustments to the Contract unit prices:

(1) For deviations from 3/8 in [10 mm] to ½ in [13 mm], 75 percent of the Contract unit price, and

(2) For minor areas with deviations greater than 1/2 in [13 mm], 50 percent of the Contract unit price.

G Concrete Curing and Protection

After completing final finishing operations, cure all exposed concrete surfaces. Use one of the following curing methods:

(1) Place the membrane curing compound conforming to 3754 or 3755 within 30 minutes of concrete placement or once the bleed water has dissipated, unless the Engineer directs otherwise in accordance with 2406.3.G.1.a. Place the membrane curing compound on the edges within 30 minutes after permanent removal of the forms or curing blankets, unless the Contract requires otherwise.

(2) Place plastic curing blankets or completely saturated burlap curing blankets as soon as practical without marring the surface in accordance with 2406.3.G.1.b.

Failure to comply with these provisions will result in the Engineer applying a monetary deduction in accordance with 1503. When there is not a separate Contract unit price for Structural Concrete, the Department will apply a monetary deduction of $50.00 per cu. yd [$65.00 per cu. m] or 50 percent of the Contractor-provided invoice amount for the concrete in question, whichever is less.

Whenever weather conditions are such as to cause unusual or adverse placing and finishing conditions, expedite the application of a curing method or temporarily suspend the mixing and placing operations, as the conditions require.

If necessary to remove the coverings to saw joints or perform other required work, and if the Engineer approves, remove the covering for the minimum time required to complete that work.

G.1 Curing Methods

G.1.a Membrane Curing Method

Before application, agitate the curing compound as received in the shipping container to obtain a homogenous mixture. Protect membrane curing compounds from freezing before application. Handle and apply the membrane curing compound in accordance with the manufacturer's recommendations.

Apply the curing compound with an approved airless spraying machine in accordance with the following:

(1) At a rate of 1 gal per 150 sq. ft (1 L per 4 m^2) of surface curing area.

(2) Apply homogeneously to provide a uniform solid white opaque coverage on all exposed concrete surfaces (equal to a white sheet of typing paper). Some MnDOT approved curing compounds may have a base color (i.e. yellow) that cannot comply with the above requirement. In this case, provide a uniform solid opaque consistency meeting the intent of the above requirement.

(3) If the curing compound is damaged during the curing period, immediately repair the damaged area by re-spraying.

The Engineer will approve the airless spraying machine for use if it is equipped with the following:

(1) A re-circulating bypass system that provides for continuous agitation of the reservoir material,

(2) Separate filters for the hose and nozzle, and

(3) Multiple or adjustable nozzle system that provides for variable spray patterns.

If the Engineer determines that the initial or corrective spraying may result in unsatisfactory curing, the Engineer may require the Contractor to use the blanket curing method, at no additional cost to the Department.

G.1.b Curing Blanket Method

After completion of the finishing operations and without marring the concrete, cover the concrete with curing blankets. Install in a manner that envelops the exposed concrete and prevents loss of water vapor. After the concrete has cured, apply membrane curing compound to the concrete surfaces that will remain exposed in the completed work.

G.2 Protection Against Rain

Protect the concrete from damage due to rain. Have available, near the site of the work, materials for protection of the edges and surface of concrete. Should any damage result, the Engineer will suspend operations until the Contractor takes corrective action and may subject the rain-damaged concrete to 1503 and 1512.

G.3 Protection Against Cold Weather

If the national weather service forecast for the construction area predicts air temperatures of 36 °F [1 °C] or less within the next 24 h and the Contractor wishes to place concrete, submit a cold weather protection plan.

Protect the concrete from damage including freezing due to cold weather. Should any damage result, the Engineer will suspend operations until corrective action is taken and may subject the damaged concrete to 1503 and 1512.

G.3.a Cold Weather Protection Plan

Submit proposed time schedule and plans for cold weather protection of concrete in writing to the Engineer for acceptance that provides provisions for adequately protecting the concrete during placement and curing. Do not place concrete until the Engineer accepts the cold weather protection plans.

H Backfill Construction

Protect newly placed concrete from damage by adjacent vibratory or backfilling operations for a minimum of 24 hours. Resume vibratory and backfilling operations after the concrete has reached a minimum compressive strength of 2000 psi [13.7 MPa] or a flexural strength of 250 psi [1.7 MPa]. Cast concrete control specimens in accordance with 2461.3.G.5. The Engineer will test the control specimens. If damage results from any of these operations the Engineer will suspend all operations until corrective action is taken and a new method is approved. The Engineer may subject damaged concrete to 1503 and 1512.

The Contractor may hand operate concrete consolidation equipment and walk behind vibratory plate compactors 24 h after placing the concrete, and other equipment as approved by the Engineer in conjunction with the Concrete Engineer. The Contractor may also use rollers in “static” mode and fine grading machines.

As soon as possible after the curing is complete and without subjecting the concrete work to damaging stresses, perform the backfill or embankment construction to the elevations shown on the plans. If the Contract does require a specific backfill material, use suitable grading materials from the excavations in accordance with 2105. Place and compact the backfill material in accordance with 2105.

Dispose of surplus excavated materials in accordance with 2105.

I Preformed Expansion Joint Sealers

Install expansion joint material in accordance with the manufacturer's recommendations, the plans, and the following:

Select a preformed material utilized for sealing the E8 expansion from the MnDOT approved products list.

2406.4 METHOD OF MEASUREMENT

When the Proposal contains an item (or items) for construction of bridge approach panels, their construction will be measured and paid for separately as complete in place items. Measurements will be by the total area of all panels of the same basic design. In the absence of such items, the panel construction will be measured for payment under the several items provided for pavement construction.

2406.5 BASIS OF PAYMENT

Payment for construction of bridge approach panels will be made under 2301.553 Bridge Approach Panels at the Contract bid price per square yard **(square meter)** for all panels and will be compensation in full for all costs of constructing the bridge approach panels as detailed in the Plans, including the costs of furnishing and placing concrete, steel, drainage system, polyethylene sheeting, construction of integrant curb, terminal headers, concrete sills, protecting and curing the concrete, joints and other incidental work not specifically included for payment under other Contract items.

Item No.	Item:	Unit:
2301.553	Bridge Approach Panels	square yard (square meter)

S-79 <u>(2411) CONCRETE STEPS-DESIGN SPECIAL</u>

This work shall consist of constructing concrete steps at the Vista View Apartments as detailed on Sheet No. 94 of the Plan. All construction shall be done after the utilities in the immediate area have been relocated.

S-79.1 Measurement will be by the total linear foot of concrete steps constructed consisting of 3 steps as detailed in the Plan.

S-79.2 Payment will be made under Item No. 2411.603 (Concrete Steps-Design Special) at the Contract price per linear foot which shall be compensation in full for all costs relative thereto.

S-80 <u>(2411) RECONSTRUCT RETAINING WALL</u>

This work shall consist of reconstructing a block retaining wall salvaged on the Project as located on Sheet No. 92 of the Plan. The wall shall be restored to its original condition prior to being salvaged due to sewer line construction in the immediate area.

S-80.1 Measurement will be by the square yard of retaining wall reconstructed.

S-80.2 Payment will be made under Item No. 2411.604 (Reconstruct Retaining Wall) at the Contract bid price per square yard which shall be compensation in full for all costs relative thereto.

S-81 (2411) CONCRETE RETAINING WALL (SPECIAL)

S-81.1 DESCRIPTION

If a soil nail wall is selected, the work shall include excavating in staged lifts in accordance with the approved Contractor's plan; detailing the drilling of the soil nail drill-holes to the diameter and length required for support of the wall; grouting the soil nails; performing required performance and proof tests; providing and installing the specified drainage features; providing and installing bearing plates, washers, nuts, and other required miscellaneous materials; verifying that the soil nails are entirely contained within the permanent ROW; and constructing the required temporary shotcrete face and constructing the final permanent concrete facing. Construction shall proceed from the top down.

If a soldier pile wall is selected, the work shall include constructing drilled or driven soldier piles to lengths required for support of the wall, verifying that the wall is contained within the permanent ROW, installing the specified drainage features, installing the lagging and connections and constructing the final permanent concrete facing. Construction shall proceed from the top down.

For either a soil nail or a soldier pile wall, the wall shall be designed by the contractor and the design shall consider overall (global) stability and external stability. Overall stability shall be checked for all stages of construction and for the permanent condition. Internal stability shall be considered for soil nail walls. All appurtenances behind, in front of, under, mounted on, or passing through the wall such as drainage structures, utilities, traffic, slope surcharge or other appurtenances shown on the plans shall be accounted for in the stability analysis.

For either a soil nail or a soldier pile wall, the work shall be performed in accordance with the applicable provisions of MnDOT Specifications 3126, 3137, 3149, these Special Provisions, the applicable MnDOT Standard Specifications for Construction and in close conformity with the lines, grades, standards, design, architectural details, and dimensions shown on the Plans or as otherwise established. The plans show the location of a proposed 72" diameter pipe. Depending on the construction staging for the project, retaining wall 3 may have to be permanently extended to the limits shown on the plans in order to maintain a 2(H):1(V) slope between retaining wall 3 and the 72" diameter pipe. See the plans for more detailed information. Temporary sheet piling or shoring may be required depending on staging. The Contractor shall be responsible to determine the locations of sheet piling and/or shoring (if needed) based on the Contractor's construction operation.

81.1.1 CONTRACTOR QUALIFICATIONS

Contractor's Experience Requirements and Submittal-The Contractor shall submit a project reference list verifying the successful construction completion of at least three permanent soil nail retaining wall or solider pile wall projects during the past three years, totaling at least 10,000 square feet of wall face area. A brief description of each project with the Owner's name and current phone number shall be included.

A Registered Professional Engineer employed by the Contractor and having experience in the construction of permanent solider pile or soil nail retaining walls on at least three completed projects over the past five years shall supervise the Work. The

on-site supervisor and drill rig operators shall have experience installing permanent soil nails or soldier piles on at least three projects over the past three years.

The wall designer shall be a professional engineer licensed by the State of Minnesota and shall prepare, sign, and date the design calculations, shop drawings. The wall designer shall have experience in the design and construction of a minimum of five soil nail or soldier pile wall projects. This experience shall include walls of equivalent complexity and similar height to the walls being designed as part of this contract. A letter certifying the wall designer's previous design experience shall be submitted to the Engineer.

At least 60 calendar days before starting the wall, the Contractor shall submit five copies of the completed project reference list and a list identifying the, wall design Engineer, supervising Engineer, drill rig operators, and on-site supervisors assigned to the project. The personnel list shall contain a summary of each individual's experience and be complete enough for the Engineer to determine whether each individual satisfies the required qualifications. The Engineer will approve or reject the Contractor's qualifications within fifteen working days after receipt of a complete submission. Work shall not be started nor materials ordered until the Engineer's written approval of the Contractor's qualifications is given. Work shall not be started nor materials ordered until the shop drawing and calculation submittal review is compete, **see Section S-81.4.8 Construction Shop Drawing and Calculation Submittal.**

The Engineer may suspend the Work if the Contractor uses non-approved personnel. If work is suspended, the Contractor shall be fully liable for all resulting costs, and no adjustment in contract time will result from the suspension.

81.1.2 CONSTRUCTION SITE SURVEY

Before bidding the Work, the Contractor shall review the available subsurface information and visit the site to assess the site geometry, equipment access conditions, and location of existing structures and above ground facilities.

The Contractor is responsible for field locating and verifying the location of all utilities shown on the Plans prior to starting the Work. Maintain uninterrupted service for those utilities designated to remain in service throughout the Work. Notify the Engineer of any utility locations different from those shown on the Plans that may require geometric wall design modifications. Subject to the Engineer's approval, additional cost to the Contractor due to nail or solider pile relocations and/or wall design modifications resulting from utility locations different from shown on the Plans will be paid as Extra Work.

Prior to start of any wall construction activity, the Contractor and Engineer shall jointly inspect the site to observe and document the pre-construction condition of the site, existing structures and facilities. During construction, the Contractor shall observe the conditions above the wall on a daily basis for signs of ground movement in the vicinity of the wall. Immediately notify the Engineer if signs of movements such as new cracks in structures, increased size of old cracks or separation of joints in structures, foundations, streets or paved and unpaved surfaces are observed. If the Engineer determines that the movements exceed those anticipated for typical soil nail or soldier

pile wall construction and require corrective action, the Contractor shall take corrective actions necessary to stop the movement or perform repairs. When due to the Contractor's methods, operations, or failure to follow the specified/approved construction sequence, as determined by the Engineer, the costs of providing corrective actions will be borne by the Contractor. When due to differing site conditions, as determined by the Engineer, the costs of providing corrective actions will be paid as Extra Work.

81.1.3 PRE-CONSTRUCTION MEETING

A pre-construction meeting will be scheduled by the Engineer and held prior to the start of wall construction. The Engineer, prime Contractor, specialty Contractor and geotechnical instrumentation specialist (if applicable) shall attend the meeting. The excavation Contractor, shotcreting Contractor and survey Contractor, if different than the prime or specialty contractor, shall also attend. Attendance is mandatory. The pre-construction meeting will be conducted to clarify the construction requirements for the work, to coordinate the construction schedule and activities, and to identify contractual relationships and delineation of responsibilities amongst the prime Contractor and the various Subcontractors, particularly those pertaining to wall installation and excavation, nail installation and testing, excavation and wall alignment survey control, and shotcrete construction. Soil nail or solider pile wall construction requires excavation in staged lifts and excavation in the vicinity of the wall face requires special care and effort compared to general earthwork excavation. The earthwork excavation quantity is included in the roadway quantities but the required methods of excavation for the wall staged lifts are identified in the specification.

S-81.2 DESIGN REQUIREMENTS

The wall designer shall be a professional engineer licensed by the State of Minnesota and shall prepare, sign, and date the design calculations, shop drawings. The wall designer shall have experience in the design and construction of a minimum of three soil nail or solider pile (whichever is selected) wall projects. This experience shall include soil walls of equivalent complexity and similar height to the walls being designed as part of this contract.

The Contractor shall provide the wall designer with a complete set of project plans and specifications, geotechnical reports and all other necessary information to design the wall. The Contractor shall ensure that the wall design is compatible with all other project features that may impact the design and construction of the wall.

The design shall consider the influence of temporary construction slopes or stockpiles. The design shall be in accordance with the plans, and the design and construction provisions of the AASHTO LRFD Bridge Design Specifications, latest with all interim revisions. If a soil nail wall design is selected it shall also be in accordance with the guidelines in NCHRP Report 701, Proposed Specifications for LRFD Soil-Nailing Design and Construction and the MnDOT LRFD Bridge Design Manual. If the provisions of the above documents conflict, the designer shall follow the most stringent requirements as determined by MnDOT.

The following provisions shall be followed for the design of the wall:

A. The minimum design life for the wall system other than soil reinforcement and connections shall be 75 years. The minimum design life for permanent soil nails and connections, including corrosion protection, shall be 100 years. The minimum design life for temporary nails used during construction staging only shall be 5 years.

B. The allowable horizontal deflection at the top of the wall shall not exceed 0.5 percent of the wall height.

C. The wall foundations shall be designed for a maximum total settlement of one inch and for a maximum differential settlement of 0.5 inch in 10 feet.

D. All reinforcement shall be epoxy coated per Mn/DOT Standard Specification 3301.

E. The Contractor shall design all retaining walls based on soil conditions found at the site specific subsurface investigation and testing information for RW#3 (S.P. 1901-148) can be found at:
http://www.mrr.dot.state.mn.us/geotechnical/foundations/borings/borings.asp

F. For soil nail or soldier pile walls, permanent concrete fascia shall be:

1. Designed in accordance with AASHTO LRFD Section 11.8.5.2.
2. The concrete mix designation shall be 3Y43.
3. The concrete strength assumed for design shall not exceed 4000 psi.
4. The minimum thickness shall be six inches including the 1” depth of architectural concrete texture (random batten).
5. For soldier pile walls, the concrete fascia shall carry 100% of the load that could occur during the life of the wall. When timber lagging (including pressure treated lumber) is designed to be placed behind a facing element, conventional design practice is to assume that lagging will eventually fail and the load will be transferred to the concrete fascia. If another type of permanent lagging is used behind the precast fascia panel, then the design of the fascia panel will be controlled by internal and external forces other than lateral pressures from the soil (weight, temperature, Seismic, Wind, etc.). The connections for precast panels to soldier piles shall be designed for all applicable loads and the designer should consider rigidity, longevity (to cyclic loading, corrosion, etc.), and load transfer.

G. The structural design of soldier piles shall be based on the elastic section modulus “S” for the entire length of the pile. The plastic section modulus “Z” may not be used for soldier pile design in any circumstances.

H. For soldier pile walls, soldier piles that penetrate rock shall be pre-drilled. All pre-dilled pile shafts shall be encased with concrete.

I. For soil nail wall design, all procedures and resistance factors shall be obtained from the publication titled, “NCHRP Report 701, Proposed Specifications for LRFD Soil-Nailing Design and Construction”, Appendix A.

J. For soil nail wall design, passive pressure in front of the wall mass shall be assumed to be zero.

K. The wall shall be designed and detailed to accommodate differential movements and loads from adjacent structures.

L. The wall shall contain at least two rows of soil nails and maximum horizontal and vertical soil nail spacing's shall be 5'-0". Permanent soil nails shall be entirely contained within the permanent ROW. Temporary soil nails may be placed within the temporary easement as long as they are removed prior to the completion of the wall.

M. If the placement of an obstruction in the wall soil nail zone such as a catch basin, grate inlet, signal or sign foundation, guardrail post, or culvert cannot be avoided, the design of the wall near the obstruction shall be modified using one the of the following alternatives:

a. Assuming soil nails must be partially or fully severed in the location of the obstruction, design the surrounding nails to carry the additional load which had been carried by the severed soil nail. The portion of the wall facing in front of the obstruction shall be made stable against a toppling or sliding failure.

b. Place a structural frame around the obstruction capable of carrying the load from the soil nail in front of the obstruction to reinforcement connected to the structural frame behind the obstructions. The frame and connections shall be designed in accordance with Section 6 of the AASHTO Bridge Design Specifications.

N. No drilling or driving of posts (sign, guardrail, etc.) or other roadside hardware in the soil nail zone after the soil nails are placed. If such roadside hardware is required, the design and plans shall include details such as sleeves to accommodate it.

O. The design shall consider overall stability, external stability: sliding, basal heave, structural: facing flexure, facing punching-shear and facing-headed-stud tensile. Soil nail walls shall consider internal stability: nail in tension and pullout. All appurtenances behind, in front of, under, mounted on, or passing through the wall such as drainage structures, utilities, traffic, slope surcharge or other appurtenances shown on the plans shall be accounted for in the stability analysis.

P. <u>Use a maximum solider spacing of 10 ft.</u>

Q. All soldier piles shall be designed for the effective section modulus. The effective section modulus is the modulus minus the effects of corrosion assuming a design life of 100 years.

R. Five zones have been identified to provide general guidance for MnDOT approval when utilities are near soil nail walls. The zones are referenced in **Figure S-81-1 Utilities Near Foundations**. For purposes of this section, utilities are defined as any utility requiring a permit as well as State owned utilities and stormwater structures. Dry utilities are defined as facilities that do not carry fluid, examples include power and telephone. Wet utilities are those facilities that carry fluid, but do not include roadway edge drains or subsurface drains associated with the bridge or wall structure.

S. During the construction of a soil nail wall, utilities are to be placed outside of zone 1 referenced in **Figure S-81-1 Utilities Near Foundations** when possible. If relocation is impractical or impossible, new utilities installed in zone 1 and existing utilities in zone 1 require MnDOT approval. The casing requirements for the 72" diameter pipe shown on the plans were waived based on a risk assessment by MnDOT. Additional provisions for the 72" diameter pipe are included in the plans and special provisions. No new wet utilities (other than the 72" diameter pipe) may be placed longitudinally (i.e., parallel to the wall) in zone 1. New utilities placed in Zone 1 may be placed transversely (i.e., perpendicular to the wall) in zone 1 of an existing wall, with Bridge Office approval of proposed design and construction sequencing. All pipes and conduits must be designed for any surcharge loading due to soil or structure bearing pressures and possible resulting deformations. All wet utilities (except for utilities that are used for wall drainage) must be cased in zone 1; if facilities are too large or cannot be cased effectively, a site specific design is required. Utility owners may choose to case dry utilities to allow for future maintenance or access; however, casing is not required for dry utilities. Future open trench excavation is prohibited in order to protect the wall from potential undermining. Other forms of excavation may be permitted in zone 1 with Bridge Office approval.

In zone 2, new utilities may be installed. Excavation for utility maintenance or replacement is permitted with proper sheeting and shoring; however, unbraced cuts are not allowed. All utilities installed in zone 2 must follow the same casing requirements as in zone 1, except that encasement is required for stormwater pipes with velocities greater than 10 fps, pipe diameters 54 inches and larger, or pipe materials other than design 3006 RCP.

In zone 3, future access through excavation areas is permissible and casing is not required for wet or dry utilities.

In zone 4, future access through the excavation is permissible and casing is not required. Use gasketed pipe as needed for wet utilities. When excavating within this zone, install shoring or sheet piling, without damaging the geomembrane, to protect the reinforced zone.

In zone 5, utilities are to be placed outside of the zone when possible. Existing utilities cannot remain in place as they will be disturbed during construction. New utilities may be installed in zone 5 with Bridge Office approval provided that they are placed during the original construction of the wall and are not wet utilities placed longitudinally. All wet utilities placed transversely must be cased and if utilities are too large or cannot be cased effectively, a site specific design is required. Casing is not required for dry utilities; however utility owners may choose to case dry utilities to allow for future maintenance or access. Future excavation is prohibited.

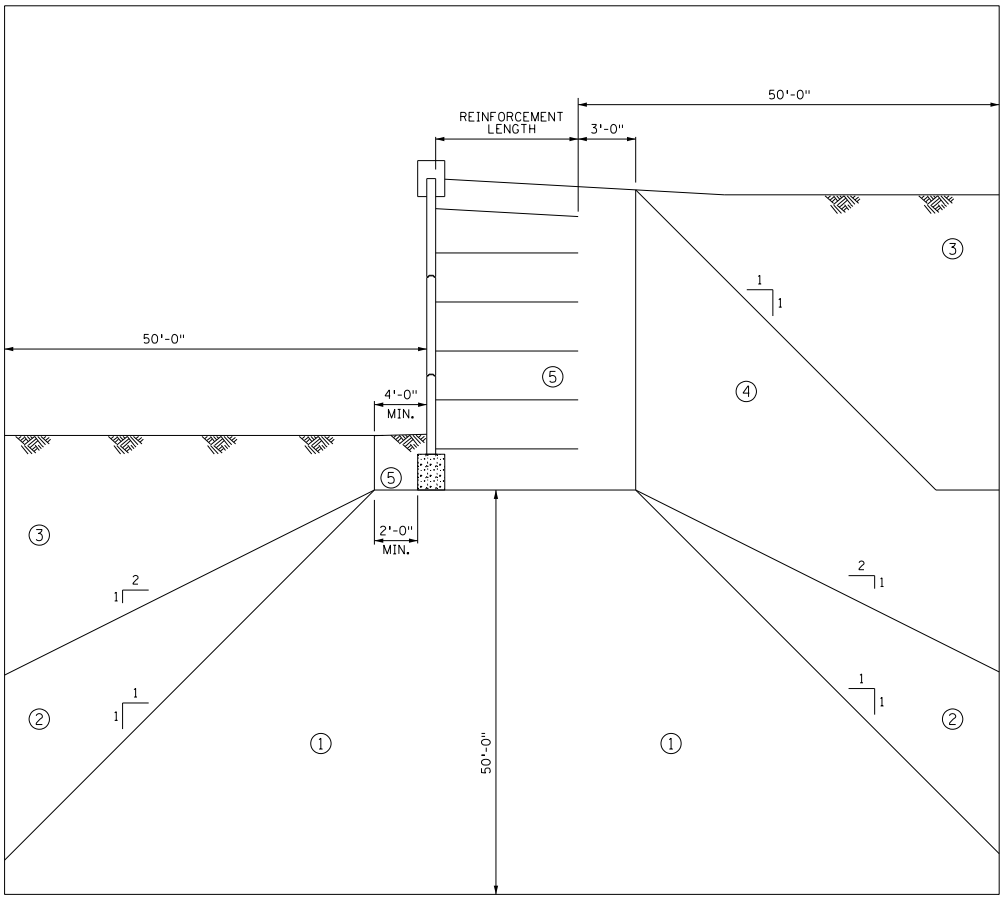

Utilities Near Foundations, FIGURE S-81-1

S-81.3 MATERIALS

Furnish materials new and without defects. Remove defective materials from the job site at no additional cost. Materials for soil nail structures shall consist of the following:

a) Solid Soil Nail Bars: Solid nail bars shall meet the requirements of AASHTO M 31/ASTM A 615, Grade 420 or 520, or ASTM A 722 for Grade 1035 and shall be class I corrosion resistant per "FHWA-IF-99-015, Geotechnical Engineer Circular No. 4, Ground Anchors and Anchored Systems", Chapter 6. Soil nail bars shall be continuous without splices or welds, new, straight, undamaged, bare or epoxy coated, or encapsulated as shown on the Plans. Bars shall be threaded a minimum of 150 mm on the wall anchorage end, to allow proper attachment of the bearing plate and nut. If threads are cut into a soil nail bar, provide the next larger bar number designation than what is shown on the Plans, at no additional cost.

b) Bar couplers: Bar Couplers shall develop the full nominal tensile capacity of the soil nail bars as certified by the manufacturer.

c) Fusion-Bonded Epoxy Coating: Fusion-bonded epoxy coating shall meet the requirements of ASTM A 775 and have a minimum thickness of 0.4 mm (0.016 in.) as applied electrostatically. Bend test requirements are waived.

d) Encapsulation: Bar encapsulation shall be a minimum 1-mm (0.04-in.) thick, corrugated, HDPE tube conforming to AASHTO M 252, or corrugated PVC tube conforming to ASTM D 1784, Class 13464-B.

e) Centralizers: Centralizers shall be manufactured from Schedule 40 PVC pipe or tube, steel, or other material not detrimental to the soil nail steel bar. Wood shall not be used. Centralizers shall be securely attached to the soil nail bar and shall be sized to allow: (a) position the soil nail bar within 1 in. of the center of the drill-hole; (b) tremie pipe insertion to the bottom of the drill- hole; and (c) grout to freely flow up the drill-hole.

f) Wet Cast Shotcrete: All materials, methods, and control procedures for temporary wet cast shotcrete shall be submitted to the Owner's Engineer for review and approval.

g) Cast in place Concrete: MnDOT Mix 3Y43

h) Grout: Grout shall be a neat cement or sand/cement mixture with a minimum 3-day compressive strength of 10.5 MPa (1,500 psi) and a minimum 28-day compressive strength of 21 MPa (3,000 psi), meeting the requirements of AASHTO 106/ASTM C 109.

i) Fine Aggregate: Fine aggregate for grout and/or shotcrete shall meet the requirements of AASHTO M 6/ASTM C 33.

j) Portland Cement: Portland cement for grout and/or shotcrete shall meet the requirements of AASHTO M 85/ASTM C 50, Type I, II, III, or V.

k) Drainage Material: Horizontal Drains-Provide as required and shown on the plans, slotted and unslotted PVC pipe conforming to AASHTO M-279. The contractor shall make provisions to assure that the hole does not collapse prior to the insertion of the slotted drain. The front 4 1/2 inches of drainpipe shall be unslotted.

l) Fittings: Fittings for underdrain and perforated pipe shall meet the requirements of ASTM D 3034, Cell classification 12454-B or C, wall thickness SDR 35, with solvent or elastomeric joints.

m) Geotextiles: MnDOT Standard Specifications for Construction 3733

n) Vertical Wall Drains – Provide prefabricated, fully wrapped geocomposite drains. The core, not less than 0.25 or more than 0.50 inches thick, shall be either a preformed grid or embossed plastic or a system of plastic pillars and interconnections forming a semi-rigid mat. The core material, when covered with filter fabric, shall be capable of maintaining a drainage void for the entire height of permeable liner. Preformed drains shall be a minimum of 12 inches unless special methods are used to ensure adherence of the shotcrete to the fabrics and to preclude the fabrics from sagging under the weight of the shotcrete. They shall be suitably outletted or connected to a longitudinal drain at the bottom of the structure. When splicing of drains is required, full flow through the splice shall be maintained, and splices shall be suitably protected from damage and contamination during subsequent shotcreting. The shotcrete shall be of full thickness over the drain.

o) Steel Soldier Beams and miscellaneous steel plates. Structural steel for steel soldier beams shall be the type and weight shown in the Plans. Steel soldier beams shall conform to ASTM A572, Grade 50 unless otherwise specified. Miscellaneous steel plates shall conform to ASTM A572, Grade 50.

p) Steel Tube. Steel tube shall conform to ASTM A500, Grade B.

q) Steel Pipe. Steel pipe shall conform to ASTM A53 Grade B.

r) Steel Studs. Steel studs shall conform to Mn/DOT 2471.

s) Welding. Welding shall conform to Mn/DOT 2471.

81.3.1 MATERIALS HANDLING AND STORAGE

Store cement to prevent moisture degradation and partial hydration. Do not use cement that has become caked or lumpy. Store aggregates so that segregation and inclusion of foreign materials are prevented. Do not use the bottom 6 inches of aggregate piles in contact with the ground.

Store steel materials on blocking at least 12" above the ground and protect it at all times from damage; and when placing in the work make sure it is free from dirt, dust, loose mill scale, loose rust, paint, oil or other foreign materials. Load, transport, unload and store soldier pile wall materials so materials are kept clean and free of damage.

S-81.4 CONSTRUCTION REQUIREMENTS

Site Drainage Control - Provide positive control and discharge of all surface water that will affect construction of the retaining wall. Maintain all pipes or conduits used to control surface water during construction. Repair damage caused by surface water at no additional cost. Upon substantial completion of the wall, remove surface water control pipes or conduits from the site. Alternatively, with the approval of the Engineer, pipes or conduits that are left in place may be fully grouted and abandoned or left in a way that protects the structure and all adjacent facilities from migration of fines through the pipe or conduit and potential ground loss. Construction shall not begin until the shop drawings are approved by the engineer.

Immediately contact the Engineer if unanticipated subsurface drainage structures are discovered during excavation. Suspend work in these areas until remedial measures meeting the Engineer's approval are implemented. Capture surface water runoff flows and flows from existing subsurface drainage structures independently of the wall drainage network and convey them to an outfall structure or storm sewer, as approved

by the Engineer. Cost of remedial measures required to capture and dispose of water resulting from encountering unanticipated subsurface drainage structures will be paid for as Extra Work.

Protection of Existing Structures. All precautions shall be taken to prevent damage to existing structures and utilities. These measures shall include but are not limited controlling the vibration from the installation of casing or drilling of the soldier pile, and selecting construction methods and procedures that shall prevent caving of the soldier pile excavation.

81.4.1 EXCAVATION

Coordinate the work and the excavation so the Retaining Wall is properly constructed. Perform the wall construction and excavation sequence in accordance with the Plans and approved submittals. No excavation steeper than those specified herein or shown on the Plans will be made above or below the soil nail wall without written approval of the Engineer.

81.4.1.1 EXCAVATION AND WALL ALIGNMENT SURVEY CONTROL

Unless specified otherwise, the Engineer will provide survey reference and control points at or offset along the top of wall alignment if requested by the Contractor.

If a soil nail wall is selected, the Contractor will then be responsible for providing the necessary survey and alignment control during excavation of each lift, locating and installing each nail within the allowable tolerances, and for performing the wall excavation and nail installation in a manner which will allow for constructing the shotcrete construction facing to the specified minimum thickness can be and to the line and grade indicated in the Plans and shop drawings. Where the as-built location of the front face of the shotcrete exceeds the allowable tolerance from the wall control line shown on the Plans and shop drawings, the Contractor will be responsible for determining and bearing the cost of remedial measures necessary to provide proper attachment of nail head bearing plate connections and satisfactory placement of the final facing, as called for on the Plans and shop drawings.

If a soldier pile wall is selected, the Contractor will be responsible for surveying existing ground elevations shown in the plans and other elevations in the vicinity of soldier pile wall locations as needed. Based on these elevations, finished grades and actual soldier pile wall dimensions and details, submit revised wall envelopes for acceptance. Use accepted wall envelopes for design.

81.4.1.2 GENERAL ROADWAY EXCAVATION

Complete clearing, grubbing, grading and excavation above and behind the wall before commencing wall excavation. Do not over excavate the original ground behind the wall or at the ends of the wall, beyond the limits shown on the Plans. Do not perform general roadway excavation that will affect the wall until wall construction starts. Roadway excavation shall be coordinated with the wall excavation work, and the excavation shall proceed from the top down in a horizontal staged excavation lift sequence. If a soil nail wall is selected, do

not excavate the full wall height to the final wall alignment as shown on the Plans but maintain a working bench of native material to serve as a platform for the drilling equipment. The bench shall be wide enough to provide a safe working area for the drill equipment and workers.

81.4.1.3 WALL STRUCTURE EXCAVATION-

Structure excavation in the vicinity of the wall face will require special care and effort compared to general earthwork excavation. The excavation Contractor should take this into account during bidding. Due to the close coordination required between the wall Contractor and the excavation Contractor, the excavation Contractor shall perform the structure excavation for the soil nail wall under the direction of the wall Contractor. This work shall be performed in accordance with the provision of MnDOT 2451 except as modified below:

81.4.2 STRUCTURE EXCAVATION

Structure Excavation required to construct the wall is included in RWALL3 Quantities and shall include all excavation, sheeting and shoring and/or other protection, preparation of foundation, and placing of backfill necessary for construction of the retaining wall.

Excavate to the final wall face using procedures that: (1) prevent over-excavation; (2) prevent ground loss, swelling, air slaking, or loosening; (3) prevent loss of support for completed portions of the wall; (4) prevent loss of soil moisture at the face; and (5) prevent ground freezing. Costs associated with additional thickness of shotcrete or concrete or other remedial measures required due to irregularities in the cut face, excavation over break or inadvertent over-excavation, shall be borne by the Contractor.

The exposed unsupported final excavation face cut height shall not exceed the short-term stand-up height of the ground, whichever is less. Complete excavation to the final wall excavation line and application of the shotcrete or timber lagging in the same work shift unless otherwise approved by the Engineer. Application of the shotcrete or timber lagging may be delayed up to 24 hours if the Contractor can show that the delay will not adversely affect the excavation face stability. A polyethylene film over the face of the excavation may reduce degradation of the cut face caused by changes in moisture. Damage to existing structures or structures included in the Work shall be repaired and paid by the Contractor where approval is granted for the extended face exposure period.

Alternative excavation methods that meet these objectives may be submitted to the Engineer for review in accordance with the Submittals section.

For a soil nail wall, excavation to the next level shall not proceed until nail installation, reinforced shotcrete placement, attachment of bearing plates and nuts and nail testing has been completed and accepted in the current lift. Shotcrete shall have cured for at least 72 hours or attained at least its specified three-day compressive strength before excavating the next underlying lift. Excavating the next lift in less than 72 hours will only be allowed if the Contractor submits compressive strength test results, for tests performed by a qualified independent testing lab, verifying that the shotcrete mix being used will provide the specified three-day compressive strengths in the lesser

time.

For a soldier pile wall, excavation to the next level shall not proceed until the timber lagging has been placed.

Notify the Engineer immediately if raveling or local instability of the final wall face excavation occurs. Unstable areas shall be temporarily stabilized by means of buttressing the exposed face with an earth berm or other methods. Suspend work in unstable areas until remedial measures are developed.

81.4.2.1 WALL DISCONTINUITIES-

Where the Contractor's excavation and installation methods result in a discontinuous wall, the ends of the constructed wall section shall extend beyond the ends of the next lower excavation lift by at least 10 feet. Slopes at these discontinuities shall be constructed to prevent sloughing or failure of the temporary slopes. If sections of the wall are to be constructed at different times, prevent sloughing or failure of the temporary slopes at the end of each wall section.

81.4.2.2 EXCAVATION FACE PROTRUSIONS, VOIDS OR OBSTRUCTIONS –

Remove all or portions of cobbles, boulders, rubble or other subsurface obstructions encountered at the wall final excavation face which will protrude into the design shotcrete facing or timber lagging. Determine method of removal of face protrusions, including method to secure remnant pieces left behind the excavation face and for promptly backfilling voids resulting from removal of protrusions extending behind the excavation face. Notify the Engineer of the proposed method(s) for removal of face protrusions at least 24 hours prior to beginning removal. Voids, over break or over-excavation beyond the plan wall excavation line resulting from the removal of face protrusions or excavation operations shall be backfilled with shotcrete or concrete, as approved by the Engineer. Removal of face protrusions and backfilling of voids or over-excavation is considered incidental to the work. Cost due to removal of unanticipated man-made obstructions will be paid as Extra Work.

81.4.3 NAIL INSTALLATION (FOR SOIL NAIL WALL)

Determine installation method necessary to achieve the nail pullout resistance(s) specified on the shop drawings, in accordance with the nail testing acceptance criteria in the Nail Testing section.

No installation of production nails will be permitted in any soil unit until successful pre-production verification testing of nails is completed in that unit and approved by the Engineer. Install verification test nails using the same equipment, methods, nail inclination and nail type as planned for the production nails. Perform pre-production verification tests in accordance with the Verification Testing Section prior to starting wall excavation and prior to installation of production nails in the specific lift in which the designated verification test nails are located. The number and location of the verification tests will be as indicated on the Plans or specified herein. Verification test nails may be installed through either the existing slope face prior to start of wall

excavation, drill platform workbench, stabilization berm or into slot cuts made for the particular lift in which the verification test nails are located. Slot cuts will only be large enough to adequately accommodate the drill and test nail reaction setup. Subject to the Engineer's approval, verification test nails may also be installed at angle orientations other than perpendicular to the wall face or at different locations than specified, as long as the Contractor can demonstrate that the test nails will be installed into ground which is representative of the ground at the verification test nail locations designated on the shop drawings or herein. Install the production soil nails before the application of the reinforced shotcrete facing. At the Contractor's request and subject to the Engineer's written approval, the shotcrete facing may be placed before installing the nails. Provide a blockout through the shotcrete facing at drill hole locations using PVC pipe or other suitable material, to prevent damage to the facing during drilling. As part of the required construction submittals, provide the Engineer with acceptable structural design calculations demonstrating that the facing structural capacity will not be reduced and that the bearing plates are adequate to span the nail drill hole blockout through the construction facing. If this requires larger size bearing plates and/or additional reinforcement beyond that detailed on the shop drawings the extra cost will be incidental.

Where necessary for stability of the excavation face, the Contractor shall have the option of placing a sealing layer (flashcoat) of unreinforced shotcrete or steel fiber reinforced shotcrete or of installation of nails through a temporary stabilizing berm of native soil to protect and stabilize the face of the excavation per **Section 81.4.2 Structure Excavation**. Cost shall be incidental to the Work.

The Engineer may add, eliminate, or relocate nails to accommodate actual field conditions. Cost adjustments associated with these modifications shall be made in accordance with the General Provisions of the Contract. The cost of any redesign, additional material, or installation modifications resulting from actions of the Contractor shall be borne by the Contractor.

81.4.3.1 INSTALLATION –

The installation of the soil nails shall be made at the locations, orientations, and lengths shown on the shop drawings or as directed by the Engineer. Select installation equipment and methods suitable for the ground conditions described in the geotechnical report and shown in the boring logs. Select anchors required to develop the specified pullout resistance as shown on the shop drawings. It is the Contractor's responsibility to determine the final soil nail configuration required to provide the specified pullout resistance. Where hard drilling conditions such as rock, cobbles, boulders, or obstructions are described elsewhere in the contract documents or project Geotechnical Report, other suitable drilling equipment and anchors capable of drilling through such materials, will be used.

81.4.3.2 NAIL INSTALLATION TOLERANCES –

Nails shall not extend beyond the right-of-way or easement limits shown on the Plans. Nail location and orientation tolerances are:

- Nail head location, deviation from plan design location; six inches any

direction.

- Nail inclination, deviation from plan; + or - three degrees.
- Location tolerances are applicable to only one nail and not accumulative over large wall areas.
- Soil nails which do not satisfy the specified tolerances due to the Contractor's installation methods will be replaced at no additional cost. Nails which encounter unanticipated obstructions during drilling shall be relocated, as approved by the Engineer. Cost of drilling new nails abandoned due to unanticipated obstructions will be paid as Extra Work.

81.4.4 NAIL TESTING

Perform both verification and proof testing of designated test nails. Perform pre-production verification tests on sacrificial test nails at locations shown on the shop drawings. Perform proof tests on production nails at locations selected by the Engineer. Required nail test data shall be recorded by the Contractors Engineer. Do not perform nail testing until the shotcrete facing has cured for at least 72 hours and attained at least its specified three-day compressive strength. Testing in less than 72 hours will only be allowed if the Contractor submits compressive strength test results for tests performed by a qualified independent test lab verifying that the shotcrete mix being used will provide the specified three-day compressive strength in the lesser time. Alternatively, soil nails may be tested immediately after installation without a shotcrete facing, as long as precautions to maintain face stability are made (i.e., temporary lagging, etc.).

81.4.4.1 TESTING EQUIPMENT-

Testing equipment shall include 2 dial gauges, dial gauge support, jack and pressure gauge, electronic load cell, and a reaction frame. Provide description of test setup and jack, pressure gauge and load cell calibration curves in accordance with Submittals section.

Design the testing reaction frame to be sufficiently rigid and of adequate dimensions such that excessive deformation of the testing equipment does not occur. If the reaction frame will bear directly on the shotcrete facing, design it to prevent cracking of the shotcrete. Independently support and center the jack over the nail bar so that the nail does not carry the weight of the testing equipment. Align the jack, bearing plates, and reaction frame with the nail such that unloading and repositioning of the equipment will not be required during the test.

Apply and measure the test load with a hydraulic jack and pressure gauge. The pressure gauge shall be graduated in 75 psi increments or less. The jack and pressure gauge shall have a pressure range not exceeding twice the anticipated maximum test pressure. Jack ram travel shall be sufficient to allow the test to be done without resetting the equipment. Monitor the nail load during verification tests with both the pressure gauge and the load cell. Use the load cell to maintain constant load hold during the creep test load

hold increment of the verification test.

Measure the nail head movement with a dial gauge capable of measuring to -0.001 inch. The dial gauge shall have a travel sufficient to allow the test to be done without having to reset the gauge. Visually align the gauge to be parallel with the axis of the nail and support the gauge independently from the jack, wall, or reaction frame. Use two dial gauges when the test setup requires reaction against a soil cut face. One dial gauge should measure movement of the reaction relative to the soil face, and one relative to the reaction frame.

81.4.4.2 PRE-PRODUCTION VERIFICATION TESTING OF SACRIFICIAL TEST NAILS

The verification tests must be conducted on nails of the same design and constructed with the same construction methods to be used on production nails for meaningful results. At least two verification tests shall be conducted in each soil strata in which it is anticipated that nail bond zone will be grouted.

Verification test nails shall have both bonded and unbounded lengths. The nail bar shall not be grouted along the unbounded length. The unbonded length of the test nails shall be at least 1 m (3 ft). The bonded length of the soil nail during verification tests, $L_{B\,VT}$, shall be the smaller value of the following range:

$L_{B\,VT=}$ greater of (10 ft or $L_{B\,VT\,max}$)

The maximum length, $L_{BVT\,max}$, is defined as:

$L_{B\,VT\,max} = (C_{RT} \times A_t \times f_y \times ø_{T\text{-}VT}) / r_{po} \times ø_{po}$

where:

C_{RT} = reduction coefficient;

A_t = cross-sectional area of soil nail bar;

f_y = nominal yield resistance of soil nail bar;

r_{po} = nominal pullout resistance (per unit length) of

soil nail, as specified herein or in shop drawings;

$ø_{T\text{-}VT}$ = resistance factor for soil nail in tension in

verification tests; and

$ø_{po}$ = resistance factor for soil nail pullout.

Use C_{RT} = 0.9 for 420 and 520 MPa (Grade 60 and 75) bars.

If 1,035 MPa (Grade 150) soil nail bars are allowed in the job,

use C_{RT} = 0.8.

In verifications tests, select $ø_{T\text{-}VT}$ = 0.4 or, preferably, 0.33. Select $ø_{po}$ based on Table 11.5.6-1, “Resistance Factors,” of AAHTO LRFD Bridge Design Specifications. For preliminary values, use $ø_{po}$ = 0.5. The selection of $ø_{T\text{-}VT}$ during verification tests should be consistent with the maximum test load that has been

selected for the verification test. The maximum load depends on the selected $ø_{po}$ and must be selected such that the test bars are not overstressed during the test.

The maximum bonded length shall be preferably based on production nail maximum bar grade. Larger bar sizes shall be provided at no additional cost, if required, to meet the 10-ft minimum test bonded length requirement . The Design Load during the verification test, *DL*, shall be calculated based on as-built bonded lengths, as follows:

$DL = L_{B\,VT} \times r_{po} \times ø_{po}$

Verification tests shall be conducted by incrementally loading the verification test nails to failure or to a maximum test load of 200 percent of the *DL* in accordance with the following loading schedule. The Contractor shall record soil nail movements at each load increment.

Verification Test Loading Schedule Load Hold Time

Verification Test Loading Schedule

Load	**Hold Time**
0.05 DLmax.(=alignment load, AL)	1 minute
0.25 DL DDLDLDL	10 minutes
O.50 DL	10 minutes
0.75 DL	10 minutes
l.OO DL	10 minutes
1.25 DL	10 minutes
1.50 DL (Creep Test)	60 minutes
1.75 DL	10 minutes
2.00 DL	10 minutes
0.05 DL max. (AL)	1 minute (record permanent set)

Load levels beyond 200 percent of *DL* are optional. Dial gauges shall be set to "zero" after the alignment load has been applied. Following application of the maximum load (3.0 x *DL),* the load shall be reduced to the alignment load (0.05 x *DL* maximum) and the permanent set shall be recorded.

Each load increment shall be held for at least 10 minutes. The verification test nail shall be monitored for creep at the 1.50 x *DL* load increment. Nail movements shall be measured and recorded during the creep portion of the test in increments of 1, 2, 3, 5, 6, 10, 20, 30, 50, and 60 minute(s). The load shall be maintained during the creep test to within 2 percent of the intended load by use of a load cell.

81.4.4.3 PROOF TESTING

Successful proof testing shall be demonstrated on at least 5 percent of production soil nails in each nail row or a minimum of one per row. The Owner's

Engineer shall determine the locations and number of proof tests prior to nail installation in each row.

Production proof test nails shall have both bonded and temporary unbonded lengths. The unbonded length of the test nail shall be at least 3 ft. The bonded length of the soil nail during proof production tests, $L_{B\,PT}$, shall be at least 10 ft but not longer than a maximum length, $L_{B\,PT\,\max}$. Therefore, the following requirements shall be met:

$L_{B\,PT=}$ greater of (10 ft or $L_{B\,PTmax}$)

The maximum length, $L_{BPT\,max}$, is defined as:

$L_{B\,PT\,max} = (C_{RT} \times A_t \times f_y \times ø_{T\text{-}VT}) / r_{po} \times ø_{po}$

where:

C_{RT} = reduction coefficient;

A_t = cross-sectional area of soil nail bar;

f_y = nominal yield resistance of soil nail bar;

r_{po} = nominal pullout resistance (per unit length) of

soil nail, as specified herein or in shop drawings;

$ø_{T\text{-}PT}$ = resistance factor for soil nail in tension in

verification tests; and

$ø_{po}$ = resistance factor for soil nail pullout.

Use C_{RT} = 0.9 for 420 and 520 MPa (Grade 60 and 75) bars. If 1,035 MPa (Grade 150) soil nail bars are allowed in the job, use C_{RT} = 0.8.

In proof tests, select $ø_{T\text{-}PT}$ = 0.67. Select $ø_{po}$ based on Table 11.5.6-1, "Resistance Factors," of AAHTO LRFD Bridge Design Specifications. For preliminary values, use $ø_{po}$ = 0.5.

The Design Load during the verification test, *DL* , shall be calculated based on as-built bonded lengths, as follows:

$DL = L_{BVT} \times r_{po} \times ø_{po}$

Proof tests shall be conducted by incrementally loading the proof test nail to 150 percent of *DL* in accordance with the following loading schedule. Soil nail movements shall be recorded at each load increment.

Proof Test Loading Schedule

Load	Hold Time
0.05 DL max. *(AL)*	Until Movement Stabilizes
0.25DL	Until Movement Stabilizes
0.50DL	Until Movement Stabilizes
0.75DL	Until Movement Stabilizes
l.OODL	Until Movement Stabilizes
1.25 *DL*	Until Movement Stabilizes
1.50 *DL* (Max. Test Load)	Creep Test (see below)

Dial gauges shall be set to "zero" after the alignment load has been applied.

The creep period shall start as soon as the maximum test load (1.50 x *DL)* is applied and the nail movement shall be measured and recorded at 1, 2, 3, 5, 6, and 10 minute(s). Where the nail movement between 1 minute and 10 minutes exceeds 1 mm (0.04 in.), the maximum test load shall be maintained for an additional 50 minutes and nail movements shall be recorded at 20, 30, 50, and 60 minutes. All load increments shall be maintained to within 5 percent of the intended load.

81.4.4.4 TEST NAIL ACCEPTANCE CRITERIA –

A test nail shall be considered acceptable when the following criteria are met:

1. For verification tests, a total creep movement of less than 0.08 inches per log cycle of time between the 6 and 60-minute readings is measured during creep testing, and the creep rate is linear or decreasing throughout the creep test load hold period.
2. For proof tests, a total creep movement of less than 0.08 inches is measured between the 1 and 10-minute readings, or a total creep movement of less than 0.08 inches is measured between the subsequent log cycles, and the creep rate is linear or decreasing throughout the creep test load hold period.
3. For verification and proof tests, the total measured movement at the maximum test load exceeds 80 percent of the theoretical elastic elongation of the unbounded length of the test nail.
4. A pullout limit state does not occur at 2.0 x DL under verification testing and 1.5 x DL test load under proof testing. Pullout limit state is defined at a load level at which the test load cannot be further increased while there is continued pullout movement of the test nail. The load at the pullout limit state shall be recorded as part of the test data.
5. For proof and verification tests, a pullout failure does not occur at the maximum test load. Pullout failure is defined as the load at which attempts to further increase the test load simply result in continued pullout movement of the test nail. The pullout failure load shall be recorded as part of the test data.

Successful proof tested nails meeting the above test acceptance criteria may be

incorporated as production nails, provided that the number of helices on the test nail is equal to or greater than the scheduled production nail length. If the production proof test nail does not meet this criteria, it shall become sacrificial and shall be replaced with an additional production nail installed at no additional cost.

81.4.5 TEST NAIL REJECTION

If a test nail does not satisfy the acceptance criterion, the Contractor shall determine the cause.

81.4.5.1 VERIFICATION TEST NAILS-

The Engineer will evaluate the results of each verification test. Installation methods which do not satisfy the nail testing requirements shall be rejected. The Contractor shall propose alternative methods and install replacement verification test nails. Replacement test nails shall be installed and tested at no additional cost.

81.4.5.2 PROOF TEST NAILS-

The Engineer may require the Contractor to replace some or all of the installed production nails between a failed proof test nail and the adjacent passing proof test nail. Alternatively, the Engineer may require the installation and testing of additional proof test nails to verify that adjacent previously installed production nails have sufficient load carrying capacity. Contractor modifications may include, but are not limited to; the installation of additional proof test nails, modifying the installation method; reducing the production nail spacing from that shown on the shop drawings and installing more production nails at a reduced capacity; or installing longer production nails if sufficient right-of-way is available, and the pullout capacity behind the failure surface controls the allowable nail design capacity. The nails may not be lengthened beyond the temporary construction easements or the permanent right-of- way shown on the Plans. Installation and testing of additional proof test nails or installation of additional or modified nails as a result of proof test nail failure(s) will be at no additional cost.

81.4.6 NAIL INSTALLATION RECORDS

Records documenting the soil nail wall construction will be maintained by the Contractors Engineer, unless specified otherwise. The Contractor shall provide the Engineer with as-built drawings showing as-built nail locations and as- built shotcrete facing line and grade within five days after completion of the shotcrete facing, and as-built CIP facing line and grade within five days after completion of the CIP facing.

81.4.7 SHOTCRETE AND WALL DRAINAGE

Shotcrete facing and wall drainage work consists of furnishing all materials and labor required for placing and securing geocomposite drainage material, connection pipes, weep holes and horizontal drains (if required), drainage gutter, reinforcing steel and shotcrete for the temporary shotcrete construction facing and nail head bearing plates and nuts for the soil nail walls shown on the shop drawings. The Work shall include any preparatory trimming and cleaning of soil surfaces and shotcrete cold

joints to receive new shotcrete.

Shotcrete shall comply with the requirements of ACI 506.2, "Specifications for Materials, Proportioning and Application of Shotcrete", except as otherwise specified. Shotcrete shall consist of an application of one or more layers of concrete conveyed through a hose and pneumatically projected at a high velocity against a prepared surface.

Shotcrete shall be produced by a wet-mix process. The wet-mix process consists of thoroughly mixing all the ingredients except accelerating admixtures, but including the mixing water, introducing the mixture into the delivery equipment and delivering it, by positive displacement to the nozzle. The wet-mix shotcrete shall then be air jetted from the nozzle at high velocity onto the surface. For additional descriptive information, the Contractor's attention is directed to the American Concrete Institute ACI 506R "Guide to Shotcrete."

81.4.7.1 CONTRACTOR'S EXPERIENCE REQUIREMENTS-

Workers, including foremen, nozzlemen, and delivery equipment operators, shall be fully experienced to perform the work. All shotcrete nozzlemen on this project shall have experience on at least three projects in the past three years in similar shotcrete application work and shall demonstrate ability to satisfactorily place the shotcrete.

Initial qualification of nozzlemen will be based on either previous ACI certification or satisfactory completion of preconstruction test panels. The requirement for nozzlemen to shoot preconstruction qualification test panels will be waived for nozzlemen who can submit documented proof they have been certified in accordance with the ACI 506.3R Guide to Certification of Shotcrete Nozzlemen. The Certification shall have been done byACI recognized shotcrete testing lab and/or recognized shotcreting consultant and have covered the type of shotcrete to be used (plain wet-mix, plain dry-mix or steel fiber reinforced). All nozzlemen will be required to periodically shoot production test panels during the course of the Work at the frequency specified herein.

Notify the Engineer not less than two days prior to the shooting of preconstruction test panels to be used to qualify nozzlemen without previous ACI certification. Use the same shotcrete mix and equipment to make qualification test panels as those to be used for the soil nail wall shotcrete facing. Initial qualification of the nozzlemen will be based on a visual inspection of the shotcrete density and void structure and on achieving the specified three-day and 28-day compressive strength requirements determined from test specimens extracted from the preconstruction test panels. Preconstruction and production test panels, core extraction and compressive strength testing shall be conducted in accordance with ACI 506.2 and AASHTO T24/ ASTM C42, unless otherwise specified herein. Nozzlemen without ACI Certification will be allowed to begin production shooting based on satisfactory completion of the preconstruction test panels and passing three-day strength test requirements. Continued qualification will be subject to passing the 28-day strength tests and shooting satisfactory during production

test panels.

81.4.8 CONSTRUCTION SHOP DRAWING AND CALCULATION SUBMITTAL:

The Contractor shall be responsible to review all available geotechnical investigation reports located at

http://www.mrr.dot.state.mn.us/geotechnical/foundations/borings/borings.asp

The Contractor's signature on the proposal shall certify that this review has been performed and that any relevant geotechnical information has been provided to the designer of the wall.

For each wall the contractor shall submit two sets of complete, certified and independently checked design computations, five sets of certified shop drawings to the Engineer for quality assurance (QA) review allowing at least 30 calendar days for review before beginning the fabrication and construction of the wall system. The shop drawings shall comply with the design plans, and include all details, dimensions, quantities and any information required to lay out and construct the wall.

Upon approval of the soil nailing Contractor's qualifications submittal set forth in these special provisions; submit five copies of the following information, in writing, to the Engineer for review and approval.

The submitted design information shall include, but not be limited to, the following:

A. Plan shop drawing for the full length of EACH wall containing the following:

1. Beginning and ending stations of wall relative to roadway centerline and any changes in wall alignment.
2. Abutment footing plan showing any conflicts of tie back anchors and existing abutment piling. (if applicable)
3. Locations of bridges, piles, existing and other proposed retaining walls, slopes or other objects.
4. Plan view of soldier pile locations. (if applicable)
5. Locations for all drainage structures, pipes, signs, light poles and other conflicting existing and planned structures or obstructions as provided in the contract documents. Additional typical sections shall be provided whenever changes happen to the wall such as the addition or change in moment slab or coping, transition to approach span of bridge, etc.
6. Limits of soil nails and locations where changes in length and/or size of soil nails occur. (if applicable)
7. Location of existing and planned utilities as provided in the contract documents.
8. Existing and proposed ground elevations.
9. Limits for any construction constraints such as right-of-way, easements, staged construction, etc.

10. Horizontal and vertical curve data for curved walls.

B. Cross section drawing for EACH wall and design change identifying:

1. Location and batter of the wall face.
2. Soil nail type, dimensions, and vertical spacing. (if applicable)
3. Tie back anchor details. (if applicable)
4. Wall treatments including subsurface and surface drainage pipes & structures, bridge approach panel, etc.
5. Depth of wall embedment.
6. Limits of excavation.
7. Shotcrete facing and cast-in-place wall facing.
8. Geocomposite strip drainage system details.

C. Elevation view for the full length of EACH wall showing:

1. Top and bottom wall elevations, in-place ground line, and finished grade elevation at top and bottom of wall.
2. Top and bottom elevations of soldier piles. (if applicable)
3. Location of drainage structures and construction details around these structures. Locations and details of any penetrations in the facing panels,
4. Dimension and location of reinforcement.
5. Panel row and column numbers.
6. Panel configuration for standard and special cut panels.
7. Summary of quantities for each wall.
8. Code referencing fabrication detail (type) for each panel.
9. Pipe railing connection details.

D. Details for geocomposite strip drain placement and the station of each outlet and whether the flow is outletted through the slope in front of the wall or into a drainage structure.

E. Horizontal and vertical curve data affecting the wall. Match lines or other details to relate wall stationing to centerline stationing.

F. Connection details and dimensions between wall facing embedded devices and soil nails. (if applicable)

G. Details for construction, including but not limited to:

1. Termination at cast-in-place structures and any adjacent slope construction.
2. Connection details and reinforcement placement requirements around all obstructions including light and sign supports.
3. ALL internal drainage pipes, systems, and facilities.

4. Other details such as coping or barrier, guardrail, fencing, or noise wall.
5. Location of ALL subdrains and outlets of the internal drainage system.

H. Architectural details, including permanent CIP facing pattern and texture, joint layout and details, and surface finish and color.

I. Test panel construction.

J. General notes required for constructing the wall:

1. Design assumptions regarding material properties, material qualities and construction method.
2. Wall layout information.
3. Requirements for any backfill soil compaction.
4. Materials used in construction.
5. Reinforcement handling, storage, preparation, and placement information and requirements.
6. Angle of internal friction used for the design.

K. Copy of geotechnical report showing:

1. Plan view of sampling and field-testing locations across project site.
2. Subsurface profile across project site.
3. Boring logs.
4. All laboratory test data and results.
5. Engineering properties of the in-situ soil and the backfill soil as appropriate.
6. Required soil modification, if any.
7. Groundwater, any free water conditions, anticipated high water conditions and any required drainage schemes.
8. Recommendations concerning items that may be appropriate.
9. Internal friction angle and unit weight of the in-situ and backfill soil.

L. Copy of calculations showing:

1. Table of contents page for design computations.
2. List of all assumptions used for all calculations and rationale for each assumption.
3. Horizontal and vertical pile resistance. (if applicable)
4. Design notes page with explanation of symbols and details of any computer programs used. Tabulate all calculated capacity to demand-ratios to ensure internal and external stability.
6. Show horizontal, vertical and differential deflections and wall movements for all wall elements.

7. Panel design including the design of reinforcement connectors and internal reinforcement.

8. Calculations and test results verifying the design life of the soil reinforcement.

9. Computed applied bearing pressure and factored bearing resistance beneath the wall and the reinforced soil mass assuming an estimated total settlement of 1 inch. The computed applied bearing pressure shall be compared explicitly to the owner specified factored bearing resistance.

The submitted construction information shall include, but not be limited to, the following:

A. Measures to ensure wall and slope stability during various stages of wall construction and excavation where discontinuous rows of nails will be installed (if applicable); information on space requirements for installation equipment; temporary shoring plans (if applicable); information on provisions for working in the proximity of underground facilities or utilities (if applicable).

B. Proposed nail drilling methods and equipment including soil nail type proposed to achieve the specified pullout resistance values and any variation of these along the wall alignment.

C. Details of overall construction sequence and the sequence of soldier pile construction, including details of placement of H pile or wide flange section inside soldier pile, including support and centralization methods.

D. Proposed nail testing methods and equipment setup including: Details of the jacking frame and appurtenant bracing. Details showing methods of isolating test nails during shotcrete application (i.e., methods to prevent bonding of the soil nail and the shotcrete facing during testing, if tested after shotcreting).

E. Identification number and certified calibration records for each test jack and pressure gauge and load cell to be used. Jack and pressure gauge shall be calibrated as a unit. Calibration record shall include the date tested, device identification number, and the calibration test results and shall be certified for an accuracy of at least two percent of the applied certification loads by a qualified independent testing laboratory within 90 days prior to submittal.

F. Manufacturer Certificates of Compliance for the Soil Nails, bearing plates, nuts, drainage aggregate and PVC drain piping.

G. Written documentation of the nozzlemen's qualifications including proof of ACI certification (if applicable).

H. Proposed methods of shotcrete placement and of controlling and maintaining facing alignment and location and shotcrete thickness.

I. Shotcrete mix design including: Type of Portland cement. Aggregate source and gradation. Proportions of mix by weight and water-cement ratio. Proposed admixtures, manufacturer, dosage, technical literature.

Previous strength test results for the proposed shotcrete mix completed within one year of the start of shotcreting may be submitted for initial verification of the required compressive strengths at start of production work.

J. Certificates of Compliance, manufacturers' engineering data and installation instructions for the drainage geotextile, geocomposite drain strip, drain grate and accessories.

The Engineer will approve or reject the Contractor's submittals within 30 calendar days after receipt of a complete submission. The Contractor will not be allowed to begin wall construction or incorporate materials into the work until the submittal requirements are satisfied and found acceptable to the Engineer. Changes or deviations from the approved submittals must be resubmitted for approval. No adjustments in contract time will be allowed due to incomplete submittals.

81.4.9 PRE-CONSTRUCTION MEETING.

A pre-construction meeting scheduled by the Engineer will be held prior to the start of wall construction. Attendance is mandatory. All contractors involved with the construction of the wall shall attend.

81.4.10 MATERIALS

All materials for shotcrete shall conform to the following requirements:

Cement AASHTO M85/ ASTM C150, Type I, II, III or V.

Fine Aggregate AASHTO M6/ASTM C33 clean, natural.

Coarse Aggregate AASHTO M80, Class B for quality

Water Clean and Potable. AASHTO Ml57IASTM C94

Chemical Admixtures

Accelerator Fluid type, applied at nozzle, meeting requirements of AASHTO M194/ASTM C494/ASTM Cl141.

Water-reducer and Superplastisizer or G

AASHTO M194/ASTM C494 Type A, C, D, E, F,

Retarders AASHTO M194/ ASTM C494 Type B or D

Mineral Admixtures

Fly Ash AASHTO M295/ASTM C618 Type For C, cement replacement up to 35 percent by weight of cement.

Silica Fume ASTM C1240, 90 percent minimum silicon dioxide solids content, not to exceed 12 percent by weight of cement.

Welded Wire Fabric AASHTO M55/ASTM Al85 or A497

Reinforcing Bars for Shotcrete Facing deformed.AASHTO M31/ASTM A615, Grade 420,

Bearing Plates AASHTO M183/ASTM A36.

Nuts AASHTO M291, Grade B, hexagonal, fitted with beveled washer or spherical seat to provide uniform bearing.

Prepackaged Shotcrete ASTM C928.

Drainage Geotextile

Wall Footing Drain	AASHTO M288 Class 2, Permittivity min. 0.2 per second; AOS 0.25 mm max.
Drain Strip	AASHTO M288 Class 3, Permittivity min. 0.2 per second; AOS 0.25 mm max.
Drainage Aggregate	AASHTO M43/ASTM C33 No. 67 with no more than two percent passing the 0.075 mm sieve.
Geocomposite Drain Strip	Miradrain 6000, Amerdrain 500 or approved equal.
Film Protection	Polyethylene films per AASHTO M-171.

PVC Connector and Drain Pipes

Pipe	ASTM 1785 Schedule 40 PVC, solid and perforated wall, cell classification 12454-B or 12354-C, wall thickness SDR 35, with solvent weld or elastomeric gasket joints.
Fittings	ASTM D3034, cell classification 12454-B or 12454-C, wall thickness SDR35, with solvent weld or elastomeric gasket joints.
Solvent Cement	ASTMD2564
Primer	ASTMF656

Materials shall be delivered, stored and handled to prevent contamination, segregation, corrosion or damage. Store liquid admixtures to prevent evaporation and freezing.

Drainage geotextile and geocomposite drain strips shall be provided in rolls wrapped with a protective covering and stored in a manner which protects the fabric from mud, dirt, dust, debris and shotcrete rebound. Protective wrapping shall not be removed until immediately before the geotextile or drain strip is installed. Extended exposure to ultra violet light shall be avoided. Each roll of geotextile or drain strip in the shipment shall be labeled to identify the production run.

81.4.11 SHOTCRETE MIX DESIGN.

The Contractor must receive notification from the Engineer that the proposed mix design and method of placement are acceptable before shotcrete placement can begin.

81.4.11.1 PORTLAND CEMENT.

Shall conform to 3101, Type I.

81.4.11.2 WATER.

Shall conform to 3906.

81.4.11.3 AGGREGATES.

Shall be natural siliceous and consisting of hard, clean, strong, durable and uncoated particles, conforming to the requirements of ASTM C 33. Gradation shall be even from fine to coarse and shall be within the following limits:

Sieve Size	**Percent Passing**
9.50 mm **(3/8 inch)**	100
4.75 mm **(#4)**	95-100
2.36 mm **(#8)**	80-100
1.18 mm **(#16)**	55-85
600 µm **(#30)**	25-60
300 µm **(#50)**	10-30
150 µm **(#100)**	2-10

81.4.11.4 USE OF ADMIXTURES.

No admixtures, except air-entraining admixtures, shall be added to the shotcrete *without* approval of the Engineer. Admixtures shall contain no chlorides or other materials corrosive to steel or materials that may cause other detrimental effects such as cracking or spalling. A documented history of demonstrated satisfactory performance in a mix of similar proportions shall be submitted to the Engineer.

81.4.11.5 AIR ENTRAINMENT.

Air entrainment is required for temporary shotcrete construction facings.

81.4.11.6 STRENGTH REQUIREMENTS.

Shotcrete shall be proportioned to meet the following performance requirements:

Test Description	**Test Method**	**Age (days)**	**Minimum Compressive Strength**
Min. Compressive Strength (psi)	ASTM C 39 ASTM C 42	7 28	4000 5000
Max. Boiled Absorption, % Max Volume of Permeable Voids, %	ASTM C 642	7 7	8 17

81.4.11.7 MIXING AND BATCHING.

Aggregate and cement may be batched by weight or by volume in accordance with the requirements of ASTM C94 or AASHTO M241/ASTM C685. Mixing equipment shall thoroughly blend the materials in sufficient quantity to maintain placing continuity. Ready mix shotcrete shall comply with AASHTO M157. Shotcrete shall be hatched, delivered, and placed within 90 minutes of mixing. The use of retarding admixtures may extend application time beyond 90 minutes if approved by the Engineer.

Premixed and packaged shotcrete mix may be provided for on-site mixing.

The packages shall contain materials conforming to the Materials section of this specification. Placing time limit after mixing shall be per the manufacturers recommendations.

81.4.12 FIELD QUALITY CONTROL.

Both preconstruction test panels (for nozzlemen without previous ACI certification) and production test panels or test cores from the wall facing are required. Shotcreting and coring of test panels shall be performed by qualified personnel in the presence of the Engineer. The Contractor shall provide equipment, materials, and personnel as necessary to obtain shotcrete cores for testing including construction of test panel boxes, field curing requirements and coring. Compressive strength testing will be performed by the Engineer. Shotcrete final acceptance will be based on the 28-day strength.

Shotcrete production work may commence upon initial approval of the design mix and nozzlemen and continue if the specified strengths are obtained. The shotcrete work by a crew will be suspended if the test results for their work does not satisfy the strength requirements. The Contractor shall change all or some of the following: the mix, the crew, the equipment, or the procedures. Before resuming work, the crew must shoot additional test panels and demonstrate that the shotcrete in the panels satisfies the specified strength requirements. The cost of all work required to obtain satisfactory strength tests will be borne by the Contractor.

81.4.12.1 PRECONSTRUCTION TEST PANELS.

Each nozzleman without previous ACI certification shall furnish at least one preconstruction test panel for each proposed mixture being considered and for each shooting position to be encountered on the job. Preconstruction test panels shall be made prior to the commencement of production work using the same equipment, materials, mixture proportions and procedures proposed for the job.

Make preconstruction test panels with minimum dimensions of 30 x 30 in square and at least 4 in thick. Slope the sides of preconstruction and production test panels at 45 degrees over the full panel thickness to release rebound.

81.4.12.2 PRODUCTION TEST PANELS.

Furnish at least one production test panel or, in lieu of production test panels, six 3 in diameter cores taken from the shotcrete facing, during the first production application of shotcrete and henceforth for every 50 yd^3 of shotcrete placed. Construct the production test panels simultaneously with the shotcrete facing installation at times designated by the Engineer. Make production test panels with minimum dimensions of 18x18 in square and at least 4 in thick.

81.4.12.3 TEST PANEL CURING, TEST SPECIMEN EXTRACTION AND TESTING.

Immediately after shooting, field moist cure the test panels by covering and

tightly wrapping with a sheet of material meeting the requirements of ASTM C171 until they are delivered to the testing lab or test specimens are extracted. Do not immerse the test panels in water. Do not further disturb test panels for the first 24 hours after shooting. Provide at least six 3 in diameter core samples cut from each preconstruction test panel and production test panel. Contractor has the option of extracting test specimens from test panels in the field or transporting to another location for extraction. Keep panels in their forms when transported. Do not take cores from the outer 6 in of test panels measured in from the top outside edges of the panel form. Trim the ends of the cores to provide test cylinders at least 3 in long. If the Contractor chooses to take cores from the wall face in lieu of making production test panels, locations will be designated by the Engineer. Clearly mark the cores and container to identify the core locations and whether they are for preconstruction or production testing. If for production testing, mark the section of the wall represented by the cores on the cores and container. Immediately wrap cores in wet burlap or material meeting requirements of ASTM Cl71 and seal in a plastic bag. Deliver cores to the Engineer or testing lab, as directed by the Engineer, within 48 hours of shooting the panels. The remainder of the panels will become the property of the Contractor. Compressive strength testing will be performed by the Engineer. Upon delivery to the testing lab, samples will be placed in the moist room until the time of test. When the test length of a core is less than twice the diameter, the correction factors given in AASHTO T24/ASTM C42 will be applied to obtain the compressive strength of individual cores. Three cores will be tested at three days and three cores will be tested at 28 days in accordance with AASHTO T24/ASTM C42.

Fill core holes in the wall by dry-packing with non-shrink patching mortar after the holes are cleaned and dampened. Do not fill core holes with shotcrete.

81.4.13 CONSTRUCTION REQUIREMENTS

81.4.13.1 WALL DRAINAGE NETWORK.

Install and secure all elements of the wall drainage network as shown on the shop drawings, specified herein, or as required by the Engineer to suit the site conditions. The drainage network shall consist of installing geocomposite drain strips and PVC connection pipes as shown on the shop drawings or as directed by the Engineer. All elements of the drainage network shall be installed prior to shotcreting.

Unanticipated subsurface drainage features exposed in the excavation cut face shall be captured independently of the wall drainage network and shall be mitigated prior to shotcrete application in accordance with the Soil Nail Retention Wall System Special Provision. Costs due to the required mitigation will be paid for as Extra Work.

81.4.13.1.1 Geocomposite Drain Strips.

For a soil nail wall, install geocomposite drain strips centered between the columns of nails as shown on the shop drawings. For a solider pile wall, center strips between adjacent piles. The minimum spacing between

adjacent strip drains shall be 8'. The drain strips shall be at least 12 in. wide and placed with the geotextile side against the ground. Secure the strips to the excavation face and prevent shotcrete from contaminating the ground side of the geotextile. Drain strips will be continuous. Splices shall be made with a 12 in. minimum overlap such that the flow of water is not impeded. Repair damage to the geocomposite drain strip, which may interrupt the flow of water.

81.4.13.1.2 Connection Pipes and Weepholes.

Install connection pipes as shown on the shop drawings. Connection pipes are lengths of solid PVC pipe installed to direct water from the geocomposite drain strips into the exposed face of the wall. Connect the connection pipes to the drain strips using either prefabricated drain grates as shown on the shop drawings or using the alternate connection method described below. Install the drain grate per the manufacturer's recommendations. The joint between the drain grate and the drain strip and the discharge end of the connector pipe shall be sealed to prevent shotcrete intrusion.

The alternative acceptable method for connection of the connector pipe to the drain strip involves cutting a hole slightly larger than the diameter of the pipe into the strip plastic core but not through the geotextile. Wrap both ends of the connection pipe in geotextile in a manner that prevents migration of fines through the pipe. Tape or seal the inlet end of the pipe where it penetrates the drain strip and the discharge end of the connector pipe in a manner that prevents penetration of shotcrete into the drain strip or pipe. To assure passage of groundwater from the drain strip into the connector pipe, slot the inlet end of the connector pipe at every 45 degrees around the perimeter of the pipe to a depth of 0.25 in.

Weep holes, if required, shall be provided through the construction facing to drain water from behind the facing. Install as shown on the shop drawings. Use PVC pipe to form the weep hole through the shotcrete. Cover the end of the pipe with a rodent screen. Prevent shotcrete intrusion into the discharge end of the pipe.

81.4.13.2 TEMPORARY SHOTCRETE CONSTRUCTION FACING

81.4.13.2.1 Shotcrete Alignment and Thickness Control.

Ensure that the thickness of shotcrete satisfies the minimum requirements shown on the shop drawings using shooting wires, thickness control pins, or other devices acceptable to the Engineer. Install thickness control devices normal to the surface such that they protrude the required shotcrete thickness outside the surface. Ensure that the front face of the shotcrete does not extend beyond the limits shown on the shop drawings.

81.4.13.2.2 Surface Preparation.

Clean the face of the excavation and other surfaces to be shotcreted of loose materials, mud, rebound, overspray or other foreign matter that could prevent or reduce shotcrete bond. Protect adjacent surfaces from overspray during shooting. Avoid loosening, cracking, or shattering the ground during excavation and cleaning. Remove any surface material which is so loosened or damaged, to a sufficient depth to provide a base that is suitable to receive the shotcrete. Remove material that loosens as the shotcrete is applied. Cost of additional shotcrete is incidental to the work. Divert water flow and remove standing water so that shotcrete placement will not be detrimentally affected by standing water. Do not place shotcrete on frozen surfaces.

81.4.13.2.3 Delivery and Application.

Maintain a clean, dry, oil-free supply of compressed air sufficient for maintaining adequate nozzle velocity at all times. The equipment shall be capable of delivering the premixed material accurately, uniformly, and continuously through the delivery hose. Control shotcrete application thickness, nozzle technique, air pressure, and rate of shotcrete placement to prevent sagging or sloughing of freshly applied shotcrete.

Apply the shotcrete from the lower part of the area upwards to prevent accumulation of rebound. Orient nozzle at a distance and approximately perpendicular to the working face so that rebound will be minimal and compaction will be maximized. Pay special attention to encapsulating reinforcement. Do not work rebound back into the construction. Where shotcrete is used to complete the top ungrouted zone of the nail drill hole near the face, position the nozzle into the mouth of the drill hole to completely fill the void.

A clearly defined pattern of continuous horizontal or vertical ridges or depressions at the reinforcing elements after they are covered with shotcrete will be considered an indication of insufficient reinforcement cover or poor nozzle techniques. In this case the application of shotcrete shall be immediately suspended and the Contractor shall implement corrective measures before resuming the shotcrete operations. The shotcreting procedure may be corrected by adjusting the nozzle distance and orientation, by insuring adequate cover over the reinforcement, by adjusting the water content of the shotcrete mix or other means. Adjustment in water content of wet-mix will require requalifying the shotcrete mix.

81.4.13.2.4 Defective Shotcrete.

Repair shotcrete surface defects as soon as possible after placement. Remove and replace shotcrete which exhibits segregation, honeycombing, lamination, voids, or sand pockets. In-place shotcrete determined not to meet the specified strength requirement will be

subject to remediation as determined by the Engineer. Possible remediation options include placement of additional shotcrete thickness or removal and replacement, at the Contractor's cost.

81.4.13.2.5 Construction Joints.

Taper construction joints uniformly toward the excavation face over a minimum distance equal to the thickness of the shotcrete layer. Provide a minimum reinforcement overlap at reinforcement splice joints as shown on the shop drawings. Clean and wet the surface of a joint before adjacent shotcrete is applied. Where shotcrete is used to complete the top ungrouted zone of the nail drill hole near the face, to the maximum extent practical, clean and dampen the upper grout surface to receive shotcrete, similar to a construction joint.

81.4.13.2.6 Finish.

Shotcrete finish shall be either an undisturbed gun finish as applied from the nozzle or a rough screeded finish. Remove shotcrete extending into the CIP finish face section beyond the tolerances shown on the Plans or specified herein.

81.4.13.2.7 Attachment of Nail Head Bearing Plate and Nut.

Attach a bearing plate and nut to each nail head as shown on the shop drawings. While the shotcrete is still plastic and before its initial set, uniformly seat the plate on the shotcrete by hand wrench tightening the nut. Where uniform contact between the plate and the shotcrete cannot be provided, set the plate in a bed of grout. After grout has set for 24 hours, hand wrench tighten the nut. Ensure bearing plates with headed studs are in intimate contact with the construction facing and the studs are located within the tolerances shown on the shop drawings or specified herein.

81.4.13.2.8 Weather Limitations.

Protect the shotcrete if it must be placed when the ambient temperature is below 0°C and falling or when it is likely to be subjected to freezing temperatures before gaining sufficient strength. Maintain cold weather protection until the in-place compressive strength of the shotcrete is greater than 5 MPa. Cold weather protection includes blankets, heating under tents, or other means acceptable to the Engineer. The temperature of the shotcrete mix, when deposited, shall be not less than 10°C or more than 35°C.

Suspend shotcrete application during high winds and heavy rains unless suitable protective covers, enclosures or wind breaks are installed. Remove and replace newly placed shotcrete exposed to rain that washes out cement or otherwise makes the shotcrete unacceptable. Provide a polyethylene film or equivalent to protect the work from exposure to adverse weather.

81.4.13.2.9 Curing.

Curing is not required for temporary construction facings to be covered by a CIP facing or whose service life is less than 36 months.

81.4.13.2.10 Construction Facing Tolerances.

Construction tolerances for the shotcrete construction facing are as follows:

- Horizontal Location of Wire Mesh; Rebar; Headed Studs on Bearing Plates, from Plan location; + or - 10 mm
- Headed studs location on bearing plate, from plan location: 6 mm
- Spacing between reinforcing bars, from plan dimension: 25 mm
- Reinforcing lap, from specified dimension: 25 mm
- Thickness of shotcrete
  - If trowled or screeded: 15 mm
  - If left as shot: 30 mm
- Planeness of finish face surface-gap under 10 ft straightedge:
  - If trowled or screeded: 15 mm
  - If left as shot: 30 mm
- Nail head bearing plate, deviation from parallel to wall face: 10 degrees.

81.4.14 ARCHITECTURAL SURFACE FINISHES

Architectural Concrete Texture

This work consists of applying a random batten architectural texture to designated concrete surfaces of the permanent cast in place facing on the soil nail wall.

A. Textured Concrete Surface Forming System

The forming system shall produce a textured effect of variable-width parallel ribs similar to the profile shown in the Plans. Relief shall be 3/4 inch.

Textured concrete surfaces may be formed by using a commercial form liner system or the use of batten strips attached to the forms. Either forming system shall attach easily to the forms and be removable without causing concrete surface damage. The forming system shall be designed to form surfaces conforming to the design intent including the shape, lines, and dimensions shown in the Plans, and to avoid visible pattern repeats. Pattern features shall be matched at the edge of grooves to minimize visible pattern repeats and make the concrete surface appear uniform and continuous without seams and form marks.

Commercial form liners shall be made of high-strength urethane elastomer and shall be capable of withstanding anticipated concrete pour pressures without leakage or causing physical defects.

Subject to compliance with requirements, form liner material may be obtained from one of the following manufacturers:

a. Customrock International, Inc.

b. Milestones, Inc.

c. Scott System, Inc.

d. Other manufacturers approved by the Engineer.

B. Submittals

Within 30 days of Contract approval, the Contractor shall submit the following information to the Engineer for approval:

1. Commercial form liner product data including manufacturer's technical information, label analysis, and application instructions for each material proposed for use.
2. Laboratory test reports showing that physical or performance property requirements of the commercial form liner system are met by materials proposed for use.
3. Shop drawings indicating form liner layout and termination details. Indicate backup, rustication, reveal, and chamfer strip locations. Include jointing, form tie location, pattern placement, pattern match details, and end, edge and other special conditions. Indicate tolerances and procedure of installation and separation.
4. A 4-foot x 4-foot (minimum) sample of formed pattern shown in the Plans.
5. A sample of form ties that will be permanently embedded in the concrete, submit actual samples.
6. The Contractor shall demonstrate his workmanship by completely finishing an architectural concrete textured test panel using approved form liner materials; methods and workmanship including, but not limited to, concrete mix, form release agents, joint sealing, vibrating and form stripping practices, and ordinary surface finish. The test panel shall be unreinforced, vertically-cast and of concrete construction to determine the surface texture resulting from use of form liner products. The minimum size of concrete test panel shall be 8 inches thick, 4 feet wide and 4 feet high.

The finished effect shall closely duplicate the desired appearance of the finished textured concrete surface. An unsatisfactory test panel shall be replaced with a newly constructed test panel at the Contractor's expense.

C. Surface Preparation

All exposed textured concrete surfaces shall receive ordinary surface finish in accordance with 2401.3F2a following the water-blast cleaning specified below.

Following removal of forms including form liners, minor defects shall be finished to blend with the balance of the pattern surface. Visible vertical or horizontal seams or conspicuous form marks shall be repaired to the satisfaction of the Engineer and at the Contractor's expense.

All concrete surfaces that receive the architectural concrete texture shall be water-blasted to break the surface film and to remove all laitance detrimental to the finish coating system performance. Sandblasting will not be allowed for cleaning concrete surfaces, as it will reduce the specified surface texture. Pressure washing with water at a pressure of 3000 psi at a rate of three to four gallons per minute using a fan nozzle held perpendicular to the surface at a distance of one to two feet shall be used.

Completed prepared surfaces shall be free of blemishes, discolorations, surface voids and conspicuous form marks to the satisfaction of the Engineer. The Contractor shall correct any surface defects at his/her own cost.

D. Surface Finish

The textured concrete areas shall be finished with Architectural Surface Finish (Single Color)

E. Construction Requirements

Release agent(s) shall be verified to be compatible with the form liner and paint system to be applied to the textured concrete surfaces. It shall be non-staining and exhibit no adverse effects to the concrete surface. Release agent shall be applied in accordance with the approved form liner manufacturer's directions.

Form ties shall be made of non-corrosive materials when the portion permanently embedded in the concrete is less than 1½ inch from the finished surface.

All materials shall be stored, prepared, applied, and cured according to product manufacturer directions, with special attention given to recommended temperature range.

Position form ties and accessories shall be positioned in pattern joints and high points of finished wall. Openings shall be boxed using polystyrene filler materials at each tie location to facilitate form tie disengagement without excessive spalling, chipping or damaging the concrete. Tie holes shall be finished in accordance with 2401.3F2a using approved patching materials.

Formwork shall be stripped in accordance with the form liner manufacturer's recommendations after the concrete has gained sufficient strength to avoid surface damage. Finish form tie holes in accordance with 2401.3F2a using approved patching materials.

Prior to reuse, form liner surfaces shall be cleaned and repaired to the satisfaction of the Engineer. Split, frayed, delaminated or otherwise damaged form liners shall not be re-used for any architectural texture work; nor shall patched form liner be re-used for exposed concrete surfaces, except as authorized by the Engineer.

81.4.15 BACKFILLING BEHIND WALL FACING UPPER CANTILEVER.

Compact backfill within three feet behind the wall facing upper cantilever using light mechanical tampers.

81.4.16 SAFETY REQUIREMENTS.

Nozzlemen and helpers shall be equipped with gloves, eye protection, and adequate

protective clothing during the application of shotcrete. The Contractor is responsible for meeting all federal, state and local safety code requirements.

S-81.5 METHOD OF MEASUREMENT

The wall shall be measured by square foot of face on a vertical plane between the bottom of the wall and a line indicating the top of the wall, as shown on the Plans. All items needed for the design and construction the wall including verification and proof tests, engineering design, Solid Soil Nail Bars, Bar couplers, Fusion-Bonded Epoxy Coating, Encapsulation, Centralizers, Temporary Shotcrete, Temporary Lagging, Temporary Sheeting (if used), Drilled Shafts (if used), Grout, Permanent Concrete Facing (except for architectural surface finish), Drainage Material, Fittings, coping and Vertical Wall Drains are incidental.

The structure excavation, architectural surface finish (single color), architectural concrete texture (random batten) are paid for separately. Structure excavation will be measured by the cubic yard. Architectural surface finish (single color) will be measured by square foot of exposed face on a vertical plane between the finished ground line and a line indicating the top of the wall. Architectural concrete texture (random batten) will be measured by square foot on a vertical plane between a line 3' above the finished ground line and a line indicating the bottom of coping.

S-81.6 BASIS OF PAYMENT

The wall shall be paid for as Item No. 2411.604 "Concrete Retaining Wall (Special)" at the contract price per square yard and shall include all work necessary to design and construct the soil nail wall as described in the plan and as described above. Payment will be full compensation for all labor, equipment, materials, material tests, field tests, design services and incidentals necessary to acceptably fabricate and construct the soil nail wall.

Payment for structure excavation (on RWALL3 Plan and Profile sheet) will be by the cubic yard. Payment for architectural surface finish (single color) and architectural concrete texture (random batten) will be measured by the square foot. Payment shall be compensation in full for all costs of furnishing and installing the structure excavation, architectural surface finish (single color) and architectural concrete texture (random batten) including any incidentals.

S-82 (2411) TIMBER LAGGING CONCRETE RETAINING WALL (SPECIAL)

This work shall consist of furnishing timber lagging which may be required at Wall 3 during construction. The timber lagging may be used as the temporary support until the cast-in-place concrete face is cured. The temporary wood lagging shall remain in place after the construction is complete

The excavation shall be coordinated with the lagging installation. Vertical cuts shall not exceed 5-feet or the short-term stand-up capability of the soil, whichever is less. Along the lagging line, the soil shall be removed to the back of lagging location, plus a tolerance of l-inch maximum over excavation behind the lagging. The Contractor shall direct the excavation work so the retention system can be safely constructed.

Install the lagging and backfill with onsite materials, so the lagging is in contact with the soil.

For soldier pile spacings of 8-feet or less, use a 3-inch nominal thick untreated, mixed hardwood/softwood standard rough sown timber. Lagging shall be untreated, non-stress grade, rough cut lumber, No.3 grade or better. The maximum gap or spacer to be allowed between the timber lagging shall be 11/2-inch, the minimum space between the lagging shall be 1/2-inch.

S-82.1 PAYMENT

All material, labor and incidentals necessary to install the temporary timber lagging shall be incidental to the price bid for Pay Item No. 2411.604 Concrete Retaining Wall (Special)" for either a SOIL NAIL OR SOLDIER PILE RETENTION WALL SYSTEM.

S-83 (2411) DRILLED SHAFT (EARTH) CONCRETE RETAINING WALL (SPECIAL)

This work shall consist of furnishing drilled shafts which may be required at Retaining Wall 3. This work consists of furnishing all labor, equipment, material and other services necessary for construction of reinforced concrete drilled shafts in earth, rock, and water to possibly serve as soldier piles for Retaining Wall 3. The work shall be performed in accordance with the applicable provisions of Mn/DOT 2401, 2451, the Plans, and these Special Provisions. Reference **Section S-81 (2411) CONCRETE RETAINING WALL (SPECIAL) (SOIL NAIL OR SOLDIER PILE RETENTION WALL SYSTEM)** of these Special Provisions for additional requirements.

S-83.1 THE WORK SHALL INCLUDE, BUT NOT BE LIMITED TO:

- Obtaining all required Federal, State and local permits
- Exploratory borings as required
- Conformance with environmental regulations
- Dewatering of site as necessary for drilled shaft construction
- Earth and rock excavation for shafts
- Removal of obstructions
- Furnishing and placing temporary or permanent casing
- Disposal of drilling fluids, excavated material, waste concrete and reinforcement
- Furnishing and placing concrete
- Correction to acceptable tolerances

S-83.2 GEOTECHNICAL INFORMATION

(A) Geotechnical Data

Geotechnical borings were taken at this site for design purposes. (Subsurface investigation and testing logs are available at www.mrr.dot.state.mn.us/geotechnical/foundations/borings/borings.asp) It is the responsibility of the drilled shaft Contractor to inspect this geotechnical data and to visit the job site prior to submitting a proposal for this work.

S-83.3 DEFINITIONS

(A) Earth

Earth is defined as all material between the bottom of drilled shaft and the ground surface. It may also contain highly weathered rock ("residual soil").

(B) Obstructions

An obstruction will be classified by the Engineer as material and/or objects that cannot be efficiently removed from a shaft during normal excavation operations with the drilling equipment adequate to excavate earth and rock materials found on the Project, and which necessitate the use of other methods and/or equipment to remove. Such obstructions may be rock fragments, boulders, waterlogged timbers, or any material, natural or man-made which requires use of special tools or procedures not otherwise required for excavation of rock or earth materials on the Project.

For this Project the following will *not* be classified as obstructions and, if present, shall be removed by the Contractor with no additional compensation.

- Material present above rock elevation which is (1) required to be removed by the Contract; or (2) known to the Contractor or readily visible upon site investigation and which can be removed by conventional surface excavation methods.
- Any material below the elevation of the top of the rock.
- Boulders that are one-fourth, or less, of the shaft diameter.

S-83.4 QUALIFICATIONS OF DRILLED SHAFT CONTRACTOR

The drilled shaft Contractor shall have a minimum of three years' experience in drilled shaft installations and shall have successfully completed construction of shafts with similar site and subsurface conditions, shaft diameter and shaft depths.

The supervisor in charge of this work shall have a minimum of three years of experience in the construction of similar types of drilled shafts.

S-83.5 SUBMITTALS

The following information and data shall be submitted to the Engineer at the preconstruction conference:

(A) Proof that the above-noted drilled shaft Contractor qualifications have been met including a list of similar projects completed within the last three years with names and phone numbers of owner's representatives who can verify the Contractor's participation in those projects.

(B) Name and experience record of the supervisor in charge of the drilled shaft construction.

(C) A preliminary installation plan that contains, but is not limited to, the following data:

- A description of the proposed drilling machine and down-hole tools to be used for the drilled shaft construction
- Procedures for exploratory borings if required
- Means of access to the drilling site
- Proposed construction methods. This shall include procedures for exploration, excavation, cleaning, inspection, placement of temporary and permanent casings, removal of temporary casings, placement of reinforcement, placement

of concrete, filing of voids between permanent casing and earth or rock, and containment and disposal of excavated materials and drilling fluids.

- A description of spacers and supports to be used for the reinforcement
- Proposed schedule and sequence of construction operations
- A written contingency plan for containment and clean-up of any spill or discharge of material which might contaminate public waters

(D) Status of permits obtained or necessary for the work.

The Engineer will review the plan within 14 calendar days of submittal and provide written instructions if changes are necessary to meet Contract requirements. A final drilling plan shall then be submitted which meets all Contract requirements. If revisions in the plan are required to accommodate site conditions, or for other reasons, the Engineer's approval shall be obtained prior to implementation.

The Engineer's approval of the installation plan shall not relieve the Contractor of full responsibility for the safe and successful completion of construction of the drilled shafts.

S-83.6 METHODS AND EQUIPMENT

(A) Technique Soldier piles

The construction of the first drilled shaft shall be used to determine if the methods and equipment used by the Contractor are sufficient to produce a completed soldier pile meeting the requirements of the Plans and specifications. Ability to control dimensions and alignment of excavations within tolerances; to prevent caving of deterioration of subsurface materials by the use of slurry or other means; to properly clean the completed soldier pile excavation; to determine the elevation of ground water; to satisfactorily place structural concrete and lean mix meeting the specifications; and to satisfactorily execute any other necessary construction operations shall be evaluated during construction of the first drilled shaft. The Contractor shall revise the methods and equipment as necessary at any time during the construction of the first soldier pile when unable to satisfactorily carry out any of the necessary operations described above or unable to control the dimensions and alignment of the drilled shaft excavation within tolerances.

If at any time the Contractor fails to satisfactorily demonstrate, to the satisfaction of the Engineer, the adequacy of methods or equipment and alterations are required, technique drilled shaft will be required at no additional cost and with no extension of Contract time. Technique soldier piles shall be located as near as possible to the proposed production soldier piles but in a location as not to interfere with other construction activities. Once approval has been given to construct production drilled shafts, no changes will be permitted in the methods of equipment used to construct the satisfactory soldier pile without approval of the Engineer.

(B) Drilling and Excavation Equipment

Drilling equipment used to perform the drilled shaft work on this Project shall have the capability of providing sufficient torque and down-thrust for drilling and excavating shafts in the geologic strata described herein that are 20% greater in diameter than the largest shaft diameter and at least 6.5 feet below the deepest shaft required for this Project.

Excavation equipment shall be capable of excavating the drilled shaft to the dimensions required in the Plan with a level bottom. The cutting edges of the excavation tools shall be normal to the vertical axis of the equipment within a tolerance of ± 0.42 inches per foot of shaft diameter.

(C) Concrete Placement Equipment

Tremie - Rigid tremie pipe used to place concrete underwater shall be watertight and of sufficient length, weight, and diameter to discharge concrete at the shaft base elevation. The tremie shall not contain aluminum parts that will have contact with the concrete. The tremie inside diameter shall not be less than 10 inches unless a smaller inside diameter is approved by the Engineer. The inside and outside surfaces of the tremie shall be clean and smooth to permit both flow of concrete and unimpeded withdrawal during concrete placement. The discharge end of the tremie shall be constructed to permit the free radial flow of concrete. Wall thickness of the tremie shall be adequate to prevent crimping or sharp bends that may restrict concrete placement. A plug, valve, or bottom plate shall be used to separate the concrete from the water until the concrete is flowing through the orifice. Plugs, if left in the shaft concrete, shall be of a material approved by the Engineer.

S-83.7 DATA REPORTS

The Contractor shall complete the initial Minnesota Department of Transportation Drilled Shaft data Report for *each* drilled shaft constructed. The report shall be furnished to the Engineer within 24 hours after concreting has been completed for that shaft. Upon completion and acceptance of all shafts by the Engineer, a final report for each shaft--in the same standard format--containing any additional data shall be furnished to the Engineer. The following data shall be included in the final report:

- Date and time excavation started
- Shaft location and identification
- Shaft diameter per Plans and as constructed
- River pool elevation if appropriate
- Description of soil and rock types encountered while drilling
- Variation of shaft as constructed from plumb and from its Plan location
- Location and extent of rock cavities
- Comments on water condition within a shaft, if applicable, i.e.: flow volume, hydrostatic head, elevation encountered
- Date and time excavation completed and method of cleaning bottom if applicable
- Date concrete is placed, placement method(s) and Mix No(s)
- Diameter and depth of permanent casings used
- Other comments as deemed necessary for the work including any non-standard methods of construction which may have been required and which affected the shaft configuration and/or construction.

- Details of any obstructions encountered and removed including removal methods.

S-83.8 MATERIALS

(A) Temporary casings shall conform to the requirements of permanent casings, except that the diameters shall be as required for the particular usage.

(B) Concrete shall conform to the requirements of Mix No. 1C62 and lean concrete fill as specified in the Plans. Slump shall be increased to 7-8 inches by the use of Mn/DOT-approved superplasticizers.

Lean Concrete Fill is low strength concrete that can be readily chipped during excavation to expose the face of the steel H-pile or wide-flange section in the soldier pile. It shall consist of a mixture of Portland cement and concrete sand with a 28-day strength of between 50 and 100 psi. Admixtures such as fluidifers may be added to increase workability. It shall be fluid enough to flow during casing extraction so as not to be removed with the casing.

(C) Slurry:

Mineral slurries may be made with sodium bentonite or attapulgite mixed with fresh water, and shall meet the requirements given in the following table:

MINERAL SLURRY			
Acceptable Range of Values			
Property (Units)	**At Time of Slurry Introduction**	**In Hole at Time of Concreting**	**Test Method**
Density lb/ft^3	64.3-69.1	64.3-75.0	Density Balance
Viscosity seconds/quart	28-45	28-45	Marsh Cone
pH	8-11	8-11	pH Paper or Meter

S-83.9 ACCEPTABLE CONSTRUCTION METHODS

(A) Casing or Wet Construction Method - The casing method may be used in earth and rock strata to prevent hole caving and/or excessive deformation of the hole.

The casing shall be advanced through the earth by twisting, driving, or vibrating before being cleaned out. For rock strata the casing shall be placed in a predrilled hole. No extra compensation will be allowed for concrete required to fill an oversized casing, or an oversized excavation required to place the casing.

1) Temporary Casing - All casing shall be considered temporary (unless the drilled shaft Contractor chooses to provide a permanent casing at the top of the shafts as a form). The Contractor shall remove any temporary casing within the excavated shaft during concrete placement operations while the concrete is in a fluid state. If the Contractor elects to remove a casing and substitute a longer

and/or larger diameter casing through caving soils, the excavation shall be stabilized, as approved by the Engineer, before the new casing is installed.

Temporary casings which become bound or fouled during shaft construction and cannot be practically removed, shall constitute a defect in the drilled shaft. The Contractor shall be responsible for improving such defective shafts to the satisfaction of the Engineer. Such improvement may consist of, but is not limited to, removing the shaft concrete and extending the shaft deeper to compensate for loss of frictional capacity in the cased zone. All corrective measures shall be performed by the Contractor to the satisfaction of the Engineer. No additional compensation and extension of Contract time will be made for corrective measures, or for casing left in place.

2) Permanent Casing - Permanent steel casing may be used at the Contractor's option to form the top of the shaft within the earth strata only. The casing may be set in place prior to start of shaft drilling or a temporary casing may be used for drilling and excavation, with the permanent casing placed prior to placement of reinforcement and concrete. Permanent casing may be larger than minimum shaft diameter to allow withdrawal of the temporary casing. The permanent casing shall be cut off at the top of finished shaft elevation, as given in the Plans before or after concrete and reinforcement placement, at the Contractor's option.

When temporary casings are deemed necessary in conjunction with permanent casings, the drilled shaft Contractor shall maintain alignment of both casings on the axis of the shaft.

(B) Slurry Displacement Construction Method

The slurry displacement method may only be used in earth strata. All slurry must be removed from the excavation prior to beginning rock excavation unless written approval has been obtained from the Engineer. Mineral slurries shall be employed in the drilling process unless other drilling fluids are approved by the Engineer.

During construction, the level of the slurry shall be maintained at a height sufficient to prevent caving of the hole at a level not less than 4 feet above the highest expected piezometric pressure head along the depth of the shaft. In the event of a sudden significant loss of slurry such that the slurry level cannot practically be maintained by adding slurry to the hole, or the slurry construction method fails for any other reason, construction shall be delayed until an alternate construction procedure has been approved by the Engineer.

Slurry- When slurry is used at the Contractor's option, the Contractor shall adjust construction operations so that the maximum time that slurry is in contact with the bottom 5 feet of the drilled shaft (from time to end of drilling to beginning of structural concrete placement) does not exceed 4 hours unless otherwise specified in the Plans. If the 4-hour limit is exceeded, the bottom 5 feet of soldier pile shall be overreamed prior to performing other operations in the soldier pile at no additional cost and with no extension of Contract time.

The Contractor shall ensure that heavily contaminated slurry suspension, which could impair the free flow of concrete, has not accumulated in the bottom of the shaft.

S-83.10 CONSTRUCTION REQUIREMENTS

(A) General

Construction of drilled shafts shall not begin until the installation plan has been approved by the Engineer.

No reinforcement or concrete shall be placed in the drilled shafts without approval of the Engineer.

(B) Protection of Existing Structures

If drilled shaft excavation is required within close proximity to inplace structures or utilities, the Contractor shall take all reasonable precautions to prevent damage to those utilities and structures. Adverse effects of shaft drilling operations may include loss of ground support, lowering of water table, or vibrations detrimental to utilities and structures. If not otherwise provided in the Plans and/or Special Provisions, the Contractor shall be solely responsible for evaluating the need for, design of, and installation of all reasonable precautionary features to prevent damage. These measures shall include, but are not limited to, selecting construction methods and procedures that will prevent damage and monitoring and controlling the vibrations from construction activities. Vibration monitoring equipment shall be capable of detecting velocities of 0.1 inch/second or less.

(C) Excavation of Shafts

Shaft diameter(s) given are the minimum required for this Project. The drilled shaft Contractor may increase diameters to conform to his equipment or to expedite drilling operations, but no additional compensation will be paid unless the increased diameter is ordered by the Engineer.

(D) Cleaning and Inspection

Loose material shall be removed from drilled shafts prior to placement of reinforcement. After the shafts have been cleaned, the Engineer will inspect the shafts for conformance to Plan dimensions and construction tolerances. If permanent casing is damaged and unacceptable for inclusion in the finished shaft, the casing shall be replaced at the Contractor's expense. If a portion of a shaft is underwater, the Contractor shall demonstrate that the shaft is clean to the satisfaction of the Engineer. This shall include inspection by a diver, at no cost to the Department, if considered necessary by the Engineer. Dewatering of the drilled shafts for cleaning, inspection and placement of reinforcement and concrete will not be required. If the drilled shaft Contractor chooses to dewater the shafts for convenience of construction, this work shall be done at the Contractor's expense.

(E) Construction Tolerances

Tops of the finished shafts shall be at the elevations given in the Plans with a tolerance of plus or minus ½ inch.

(F) Concrete

The minimum placing rate for concrete in the shafts shall be 40 cubic yards per hour.

Concrete in water or slurry-filled shafts shall be placed with a tremie or by pumping. Concrete placement shall not begin until the tremie or pump line is placed to within one tremie or line diameter of the shaft base. Plugs shall be removed if not specifically approved to remain in the shaft. The discharge end shall not be raised until it becomes immersed at least 5 feet in the concrete. Immersion shall remain at a minimum of 5 feet at all times after starting the flow of concrete until the shaft has been filled. If, at any time during concrete placement in water, the discharge end is raised to the top of the fluid concrete and concrete is discharged above the rising concrete level, the Engineer may consider the shaft defective and require removal of both reinforcement and concrete. A positive pressure differential shall be maintained in the tremie or pump line to prevent water intrusion into the concrete.

Concrete shall be placed continuously to the top of the toe encasement once placement has begun.

Concrete in a dry shaft shall be placed either by free-fall, by a tremie, or by a concrete pump. Free-fall placement will only be permitted for dry construction where the depth of water does not exceed 3 inches immediately prior to commencement of the concrete pour. Concrete shall fall directly to the base without contacting the rebar cage or the shaft sidewall. A hopper and/or dropchute shall be used to direct the concrete. If concrete placement causes the shaft sidewall to cave or slough, or if the concrete strikes the reinforcement cage or sidewall, the drilled shaft Contractor shall reduce the height of free-fall or reduce the rate of concrete flow into the excavation. If placement cannot be satisfactorily accomplished by free-fall the Contractor shall place the remaining concrete with a tremie or pump.

Before temporary casing is withdrawn, the level of fresh concrete in the casing shall be at least 3 feet above the bottom of the casing. As the casing is withdrawn, care shall be exercised to maintain an adequate level of concrete within the casing so that water behind the casing is displaced upward without contaminating or displacing the shaft concrete.

S-83.11 PAYMENT

All material, labor and incidentals including all costs of drilling, excavating, leaning, and inspecting the shafts in earth as described herein, including temporary casings necessary to install the temporary timber lagging shall be incidental to the price bid for Pay Item No. 2411.604 Concrete Retaining Wall (Special)" for either a SOIL NAIL OR SOLDIER PILE RETENTION WALL SYSTEM.

No additional compensation will be paid for increased dimensions of shafts due to Contractor's method of construction, overall (global) stability requirements, oversized casing, caving of earth or rock, or corrective action necessitated to meet Contract requirements.

S-84 (2411) PREFABRICATED MODULAR BLOCK WALLS (PMBW) WITH AND WITHOUT EARTH REINFORCEMENT

This work consists of furnishing certified design calculations, shop drawings, fabrication, furnishing and installing a non-structural leveling pad, prefabricated modular block wall, soil reinforcement elements (if applicable), wall construction, excavation and backfill not included in MnDOT 2451 and 2105 and other services necessary for construction of the wall.

The work shall be performed in accordance with the applicable provisions of MnDOT Specifications 3126, 3137, 3149, these Special Provisions, and in close conformity with the lines, grades, standards, design, architectural details, and dimensions shown on the Plans or as otherwise established.

Prefabricated modular block wall systems shall be selected from the MnDOT pre-qualified wall system list at the following web site: http://www.dot.state.mn.us/products/index.html

S-84.1 DEFINITIONS AND DESIGN REQUIREMENTS

I. DEFINITIONS

A. Gravity PMBW: A retaining wall system consisting of wet cast blocks that resists earth pressures and other loads solely by the weight of the blocks.

B. PMBW with earth reinforcement: A retaining wall system that consists of reinforced soil, soil reinforcement, and wet cast blocks that resists earth pressures and other loads by a reinforced soil mass.

C. Soil Reinforcement: A material placed within a soil mass to increase the strength of the soil. Soil reinforcement for PMBWs typically consists of geogrid.

D. Reinforced Soil: Soil placed in the reinforced zone or backfill zone meeting the requirements of MnDOT 3149 and the “Materials” section of this specification. See Figures 2411-1 and 2411-2.

E. Backfill Zone: Practical limit for placement of reinforced soil. Limit begins at the bottom corner of the concrete portion of the leveling pad and extends at a slope determined by OSHA regulations and the In-Situ soils. The pay limits for the “structure excavation” quantity is a line extending at a 2 V:1 H slope from the bottom of the concrete portion of the leveling pad to the finished ground line at the top of the wall. See Figure 2411-1.

F. Reinforced Zone: Practical limit for placement of reinforced soil. Limit begins near the termini of the bottom layer of soil reinforcement and extends at a slope determined by OSHA regulations and the In-Situ soils. The pay limits for the “structure excavation” quantity is a line extending at a 2 V:1 H slope from the intersection of a horizontal line extending at the top of the leveling pad and a vertical line extending at the back of the reinforcing elements (if any). See Figure 2411-2.

G. Retained Soil: Soil retained by the PMBW mass behind the reinforced zone or backfill zone. See Figures 2411-1 and 2411-2.

H. Foundation Soil: Soil below the leveling pad and bottom layer of reinforcement not in the reinforced zone. See Figures 2411-1 and 2411-2.

I. Prefabricated Modular Blocks: Wet cast precast concrete modules used to contain the reinforced soil in position at the face of the wall. For gravity PMBW's blocks are used to resist horizontal earth forces.

J. Block Depth: The block "depth" is measured from the front face of the block to the back face of the block. The maximum block depth shall be 60".

K. Connection Device: The item used to connect the soil reinforcement to the facing block.

L. Coping: Attachment placed or cast on top of the wall to tie together the facing blocks and provide an aesthetic finish to the top of the wall

M. Geotextile Filter Fabric: Material placed behind blocks, which prevents migration of fines though the joints, yet still allows for drainage of water through joints.

N. Temporary Shims: Temporary supports used to position the blocks during construction. Permanent shims (wood, mortar, sand, bearing pads) shall not be used to level or position the blocks.

O. Impervious Layer (Geomembrane): A layer of puncture-free and flexible, roughened sheet HDPE, LLDPE or PVC at least 30 mils (0.75 mm) thick placed below the roadway surface to prevent any surface water from entering into the wall system.

P. PMBW System Supplier: The vendor who's name appears on the MnDOT pre-qualified wall system list and is responsible for supplying the PMBW system including the soil reinforcement, blocks and connections. The PMBW System Supplier designs the components of the PMBW system, designs the system for internal stability and prepares the shop drawings.

Q. Prequalified PMBW System: A PMBW wall system which has been prequalified by the MnDOT Structural Wall Committee. A list of prequalified PMBW systems can be found at http://www.dot.state.mn.us/products/index.html

R. Gravity PMBW Design Height: For walls with level fill, the wall design height is from the top of block or coping to the bottom of the concrete portion of the leveling pad. For walls containing a parapet with level fill, the wall design height is from the finished ground line at the top of the wall to the bottom of the concrete portion of the leveling pad. Parapets over 6" in height must always contain double sided architectural units. For walls with sloping fills or complex geometries see the AASHTO LRFD Bridge Design Specifications Chapter 11.

S. PMBW with Earth Reinforcement Design Height (RH): For walls with level fill, the wall design height is from the top of block or coping to the top of the concrete portion of the leveling pad. For walls containing a parapet with level fill, the wall design height is from the finished ground line at the top of the wall to the top of the concrete portion of the leveling pad. Parapets over 6" in height must always contain double sided architectural units. For walls with complex geometries see the AASHTO LRFD Bridge Design Specifications Chapter 11.

T. Exposed Height: The distance from the finished ground line at the top of the wall to the finished ground line at the base of the wall.

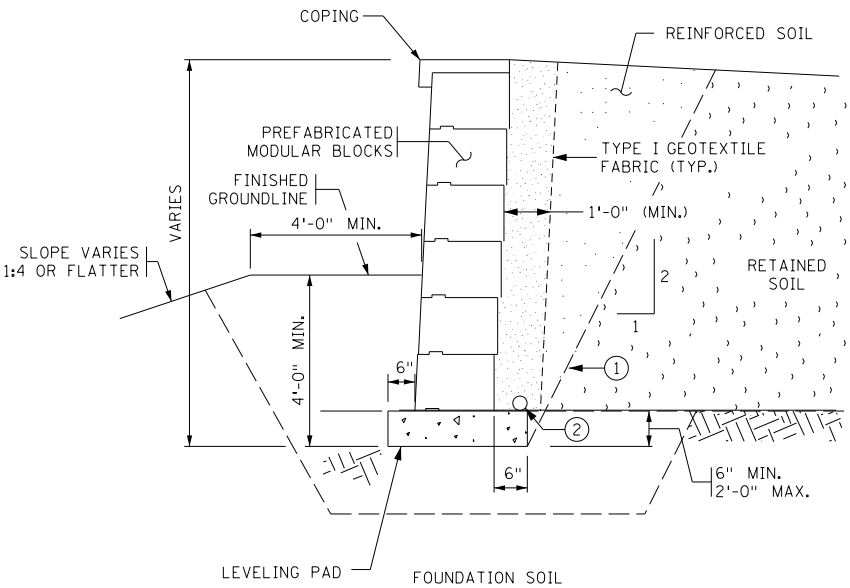

TYPICAL SECTION OF GRAVITY WALL

NOT TO SCALE
LEVEL FILL

(1) PAY LIMITS OF STRUCTURE EXCAVATION. (2:V TO 1:H) ACTUAL EXCAVATION SLOPE IS DETERMINED BY DESIGNER PREFERENCE OR OSHA REGULATIONS OF IN-SITU SOILS: EXCAVATION BEYOND "LIMITS OF STRUCTURE EXCAVATION" AT CONTRACTORS EXPENSE.

(2) 4" THERMOPLASTIC PERFORATED PIPE, SPEC. 3245. WRAP WITH TYPE 1 GEOTEXTILE, SPEC. 3733, INSTALLATION AS PER SPEC. 2502. CONNECT TO DRAINAGE SYSTEM OR OUTLET THROUGH WALL USING 6" T.P. NON-PERFORATED PIPE WITH RODENT SCREEN. ALL WORK INCIDENTAL

Figure 2411-1 Gravity PMBW Material Definitions

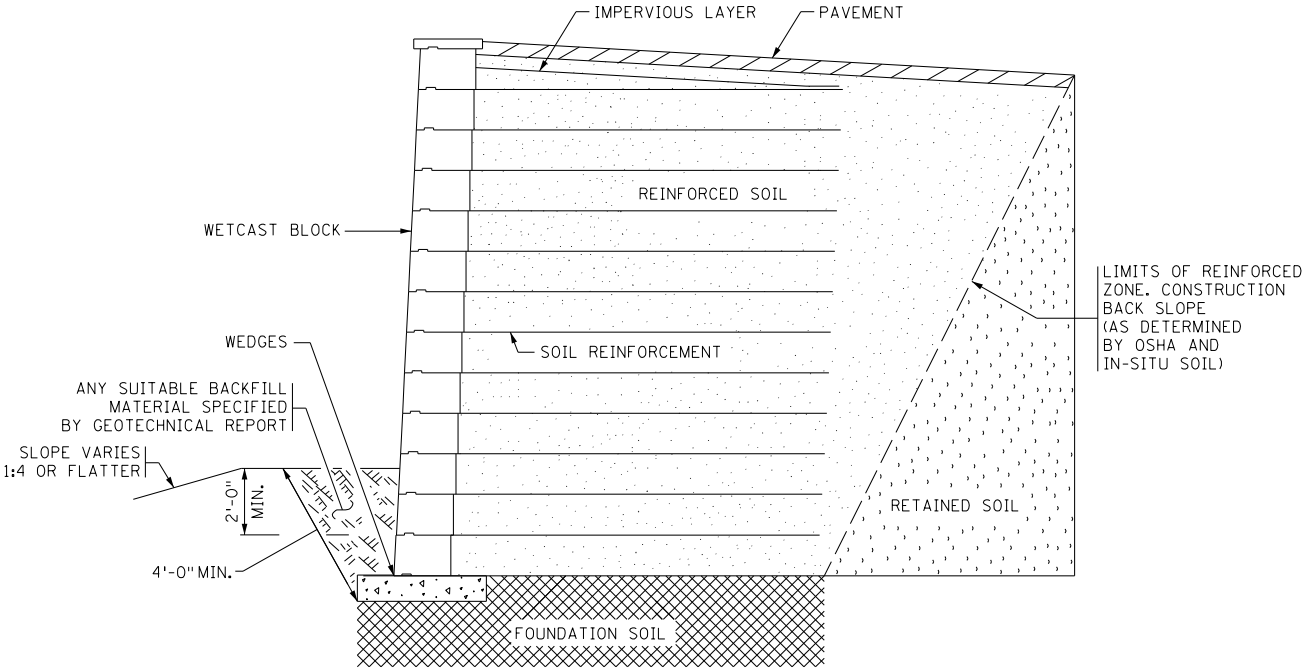

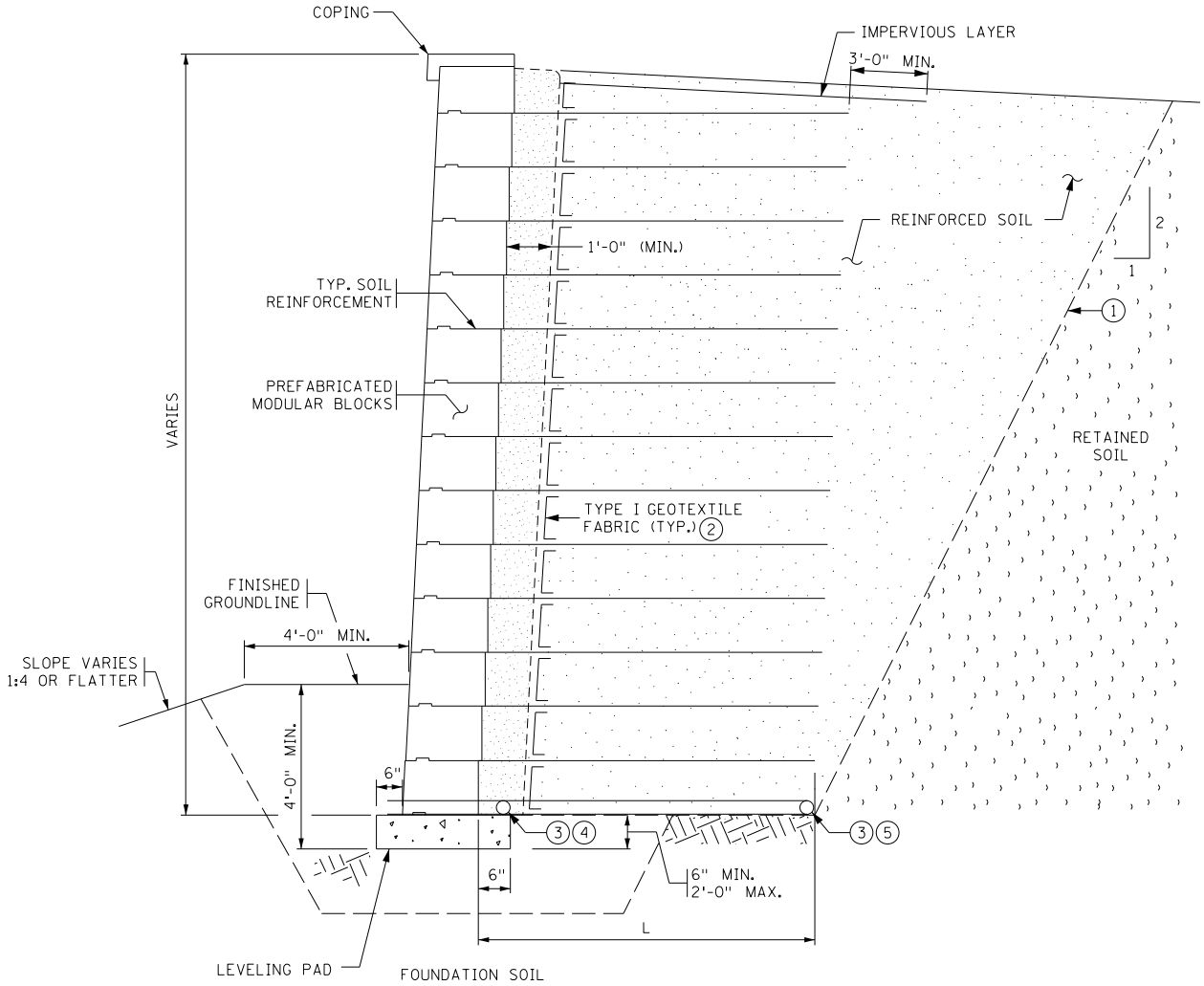

TYPICAL SECTION

NOT TO SCALE
LEVEL FILL

1. PAY LIMITS OF STRUCTURE EXCAVATION. ACTUAL EXCAVATION SLOPE IS DETERMINED BY OSHA REGULATIONS AND IN-SITU SOILS: EXCAVATION BEYOND "LIMITS OF STRUCTURE EXCAVATION" AT CONTRACTORS EXPENSE.
2. THE WRAP LENGTH FOR GEOTEXTILE FABRIC SHALL NOT BE MORE THAN 6".
3. 4" THERMOPLASTIC PERFORATED PIPE, SPEC. 3245. WRAP WITH TYPE 1 GEOTEXTILE, SPEC. 3733, INSTALLATION AS PER SPEC. 2502. CONNECT TO DRAINAGE SYSTEM OR OUTLET THROUGH WALL USING 6" T.P. NON-PERFORATED PIPE WITH RODENT SCREEN. ALL WORK INCIDENTAL
4. FRONT DRAINTILE.
5. BACK DRAINTILE.

Figure 2411-2 PMBW with Earth Reinforcement Material Definitions

II. DESIGN REQUIREMENTS

The wall designer shall be an engineer licensed by the State of Minnesota and shall prepare, sign, and date the design calculations, shop drawings, and the “PMBW Design

Certification Letter" provided herein for each PMBW in the contract. The wall designer shall have experience in the design and construction of a minimum of five PMBW projects of similar size and scope as the project currently under design. This experience shall include PMBWs of equivalent complexity and similar height to the walls being designed as part of this contract. A letter certifying the wall designer's previous design experience shall be submitted to the Engineer. A second engineer shall thoroughly check the design calculations and shop drawings to verify compliance with the specifications and shall also sign and date each "PMBW Design Certification Letter". Both the wall designer and the engineer checking the design shall have taken the NHI course titled "Design of Mechanically Stabilized Earth Wall and Reinforced Soil Slopes" (FHWA-NHI-132042) or equivalent, and shall provide proof of attendance to the Engineer.

The Contractor shall provide the PMBW designer with a complete set of project plans and specifications, geotechnical reports and all other necessary information to design the wall. The Contractor shall ensure that the wall design is compatible with all other project features that may impact the design and construction of the wall.

The design shall consider the internal and external stability of the wall mass including overturning, sliding, and bearing pressure including temporary construction slopes or stockpiles. The design shall be in accordance with any restrictions for the chosen PMBW system, the plans, and the PMBW design and construction provisions of the AASHTO LRFD Bridge Design Specifications, latest with all interim revisions. The design shall also be in accordance with the Federal Highway Administration requirements as reported in publication Nos. FHWA-NHI-10-024 and FHWA-NHI-10-025, entitled "Design and Construction of Mechanically Stabilized Earth Walls and Reinforced Soil Slopes - Volumes I and II" and the MnDOT LRFD Bridge Design Manual. If the provisions of the above documents conflict, the designer shall follow the most stringent requirement as determined by MnDOT. The internal stability design shall be performed using the Simplified Method as defined by the AASHTO LRFD Bridge Design Specifications.

For analysis of corrosion degradation life, follow the requirements of "Corrosion/Degradation of Soil Reinforcements for Mechanically Stabilized Earth Walls and Reinforced Soil Slopes" (FHWA-NHI-09-87)

The design shall meet the following requirements:

A. Only PMBW systems listed on the MnDOT pre-qualified supplier list at the letting date will be allowed. The Contractor shall include in the shop drawing and calculation submittal a copy of the MnDOT pre-qualification letter for the PMBW system, and any deviations of details from the previously submitted pre-qualification shall also be specifically outlined in the letter, including MnDOT approval of the deviations.

B. The exposed height is the distance from finished ground line at the top of the wall to the finished ground line at the base of the wall. The exposed wall height shall be less than 8' for gravity walls and less than 18' feet for walls with earth reinforcement. All walls shall have a minimum of 2' of block below the finished ground line at the base.

C. For design of PMBW's with earth reinforcement the reinforced soil shall have a unit weight of 0.120 kcf and friction angle of 34 degrees.

For gravity PMBW's if reinforced soil is placed behind the wall at a 1 V: 1 H from the bottom corner of the concrete portion of the leveling pad, a unit weight of 0.120 kcf and friction angle of 34 degrees may be used for design if adequate right of way (ROW) is available and there are no utility conflicts. If reinforced soil is placed behind the wall at less than a 1 V: 1 H from the bottom corner of the concrete of the leveling pad or for retained soil (outside of the backfill zone) properties are defined in the Geotechnical Report, but not to exceed a friction angle of 30 degrees. Shop drawings shall show fill or backfill limits consistent with the design assumptions.

D. The contribution from passive resistance in front of the wall shall not be allowed from the finished ground line to a distance of 2' below finished ground line.

E. The design life for the wall system other than soil reinforcement and connections shall be 75 years. The design life for geosynthetic reinforcement and connections used in the wall system, including long term creep, shall be 100 years.

F. For PMBW's with earth reinforcement the minimum reinforcement length shall be 0.7 x RH (see definitions section regarding PMBW's with Earth Reinforcement Design Height, RH) but not less than 8' measured from the back face of the block. The weight of the block can be used in external stability calculations, but cannot be used in internal stability calculations.

G. Gravity PMBW's are not allowed to support traffic. A vehicular roadway or parking lot shall not be situated within a 1V: 1H horizontal distance measured from the front bottom corner of the bottom block. (see Figure 2411-2). One horizontal distance shall be specified for each wall measured at the highest portion of the wall. Since no vehicular live load is applied a surcharge must be applied to account for snow loads, future maintenance operations, or future regrading. The surcharge must be 120 psf with a maximum load factor of 1.35 and a minimum load factor of 1.0

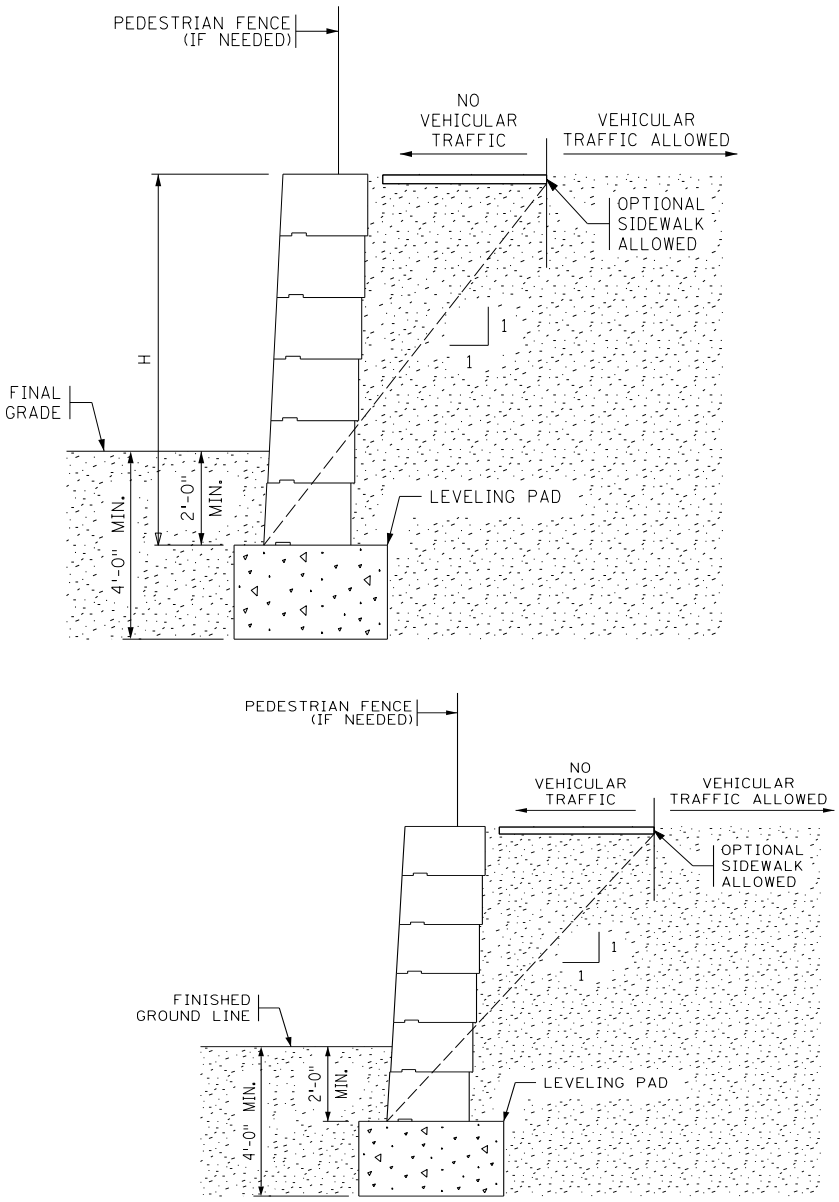

Figure 2411-3 Definition of Supporting Traffic for a Gravity PMBW

PMBW's with earth reinforcement are considered to support traffic if a vehicular roadway or parking lot is located within a horizontal distance measured from the front face of the bottom block equal to (D_u + L + 0.5 RH) where:

D_u = Depth of the Unit (assume 3' min.)
L = Length of Reinforcement (Minimum of 0.7 x H or 8')
RH = Design Height of PMBW with Earth Reinforcement

One horizontal distance shall be specified for each wall measured at the highest portion of the wall.
Due to grading, design and visual quality issues between the edge of pavement or roadway and the back of a stepped or sloped wall, traffic may not be placed within a horizontal distance of 11’ (assumes 3’ block depth + 8’ behind back of wall) of the front face of the wall, regardless of height. See Figure 2411-4.

If a PMBW supports traffic, a live load surcharge of 240 psf with a maximum load factor of 1.35 for internal stability and maximum load factor of 1.75 for external stability shall be applied. The live load surcharge load shall be placed directly behind the top block. Since live load surcharge is applied, a surcharge load to account for snow loads, future maintenance operations, or future re-grading need not be applied.

If a PMBW supports traffic and if noise walls, overhead signs or other items are attached to the barrier, then the wall shall be designed for the dead load of the barrier and attachments. Distribute the dead load to the wall according to AASHTO LRFD Bridge Design Specifications, Article 3.11.6.3.

If a PMBW supports traffic and the roadway or parking lot is located directly over the earth reinforcement, then the top two layers earth reinforcement shall be designed for a TL-4 vehicular impact load.

If a PMBW does not support traffic it does not need to be designed for vehicular live loads. For this case a surcharge load to account for snow loads, future maintenance operations, or future re-grading shall be applied. The surcharge shall be 120 psf with a maximum load factor of 1.35 and a minimum load factor of 1.0 for internal and external stability.

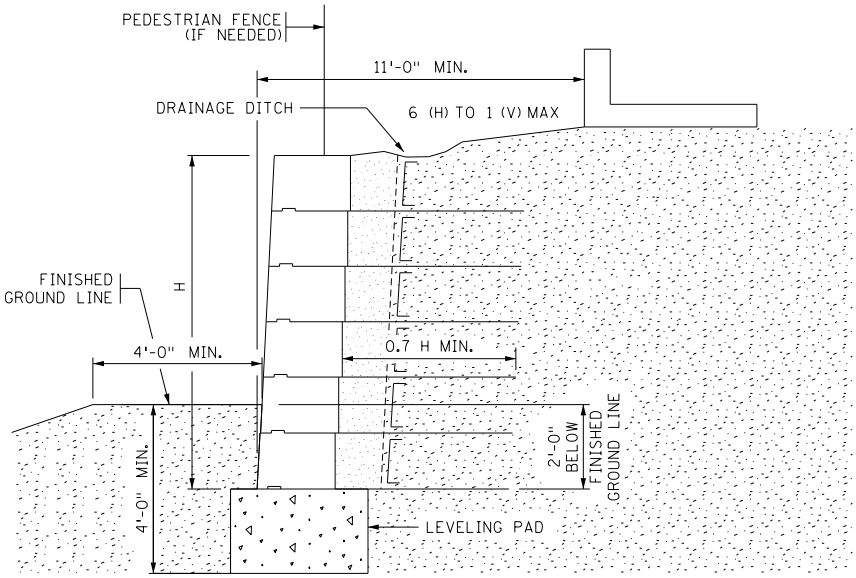

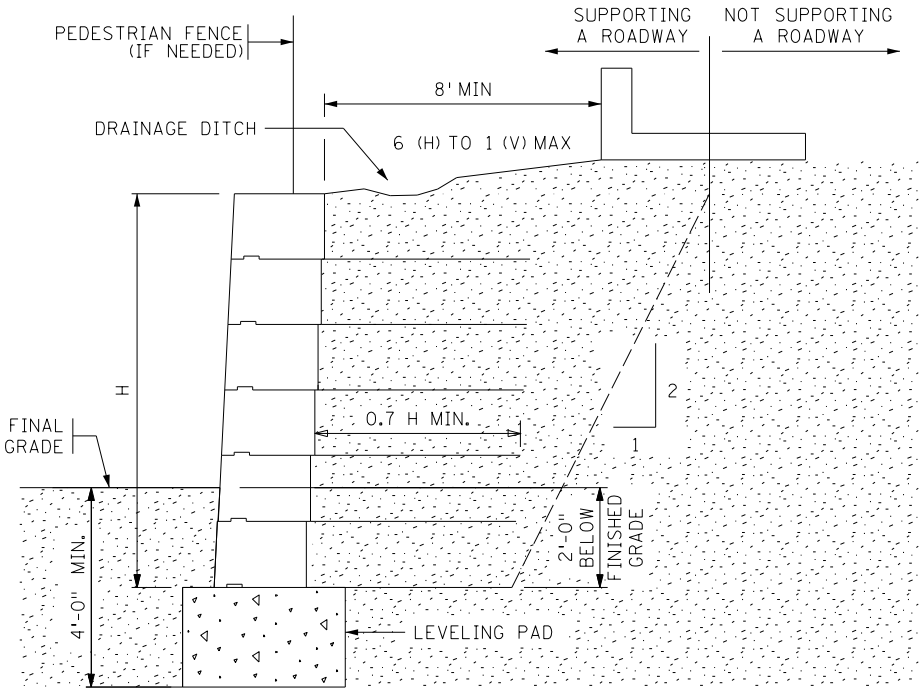

Figure 2411-4 Minimum Traffic Distance for a PMBW with earth reinforcement

H. Differential settlement shall be less than 1/200 along the length of the wall and normal to the wall alignment. Adequate joint width/or slip joints shall be provided to accommodate movements without block cracking.

The wall shall be designed and detailed to accommodate differential movements and loads from adjacent structures or structures intercepting the blocks.

All PMBW's shall have 1 foot coarse aggregate MnDOT Spec 3137 CA-3 behind the block and geotextile fabric as shown in the Figure 2411-10.

I. For PMBW's with earth reinforcement do not place two facing blocks next to each other with an interior angle of 130 degrees or less. Where wall sections meet with an interior angle of 130 degrees or less a special post or vertical corner element shall be used. Details of the post or corner element shall be submitted to the Engineer for review. The post or the corner element shall cover the joint of the blocks that abut the corner, and allow for independent movement of abutting blocks. The design shall include the attachment of soil reinforcements to the corner element. Corner elements shall be cast in one piece (with block height). Acute corner angles shall not be less than 70 degrees.

J. The length of soil reinforcement for the wall shall be constant for all layers unless approved in writing by the Bridge Office. The maximum vertical spacing of soil reinforcement layers shall be 2'-8".

K. Lateral Earth Pressure for gravity PMBW's shall be calculated according to the Coloumb method in AASHTO LRFD Bridge Design Specifications, Article 3.11.5.1. The magnitude and resultant loads and resisting forces shall be

calculated according to AASHTO LRFD Bridge Design Specifications, Article 3.11.5.9.

L. If the placement of an obstruction in the wall soil reinforcement zone such as a catch basin, grate inlet, signal or sign foundation guardrail post, or culvert cannot be avoided, the design of the wall near the obstruction shall be modified using one the of the following alternatives:

a. Assuming reinforcement layers must be partially or fully severed in the location of the obstruction, design the surrounding reinforcement layers to carry the additional load which has been carried by the severed reinforcements. The portion of the wall facing in front of the obstruction shall be made stable against a toppling or sliding failure.

b. Place a structural frame around the obstruction capable of carrying the load from the reinforcements in front of the obstruction to reinforcements connected to the structural frame behind the obstructions. The frame and connections shall be designed in accordance with Section 6 of the AASHTO Bridge Design Specifications.

c. Geosynthetic geogrid reinforcements may not be splayed, unless the connection has been specifically fabricated to accommodate a splay and the connection detail has been approved by MnDOT. Horizontal deviation is referred to as splay. If used, the splay is limited to 15 degrees.

M. All PMBW's with earth reinforcement shall be set on a concrete leveling pad. The minimum width of the pad shall be 12 inches plus the depth of the bottom block. The pad width may need to be increased to accommodate curved wall sections. The minimum height (thickness) of the leveling pad shall be 6 inches (maximum of 2 feet) and the bottom of the leveling pad must extend at least 4' below finished ground line. Vertical steps in the leveling pad shall not be greater than 2.5 feet**.**

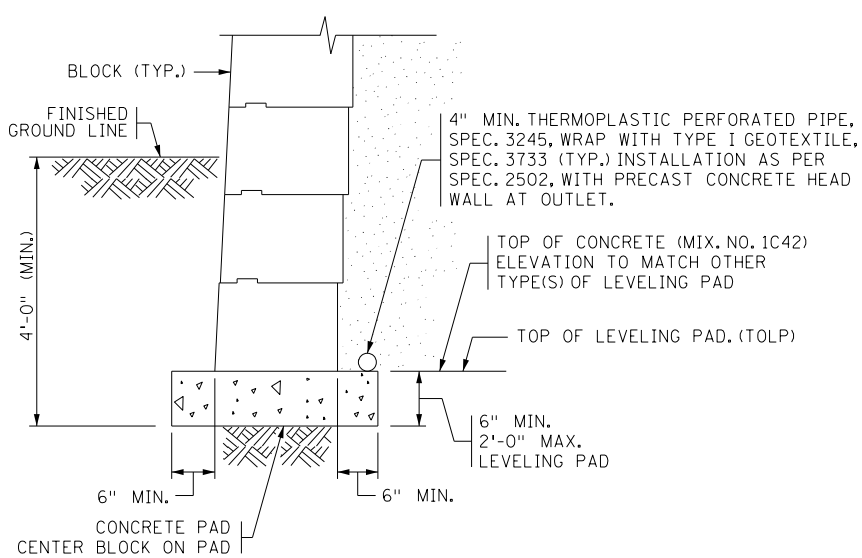

Figure 2411-5 – Full depth concrete leveling pad detail

Gravity PMBW's shall be set on either a concrete leveling pad (meeting the minimum requirements above) or a composite leveling pad. The composite leveling pad shall consist of a 6" concrete slab over at least 18" of compacted drainable coarse filter aggregate per MnDOT Spec 3149.2H. The coarse filter aggregate shall be completely wrapped with a Type 1 geotextile fabric per MnDOT Spec 3733. Drains shall be required at the bottom of the coarse filter aggregate and directly above the concrete. Due to site conditions, if the drain at the bottom of the coarse filter aggregate cannot be daylighted or outletted to a drainage system then the composite leveling pad option cannot be used.

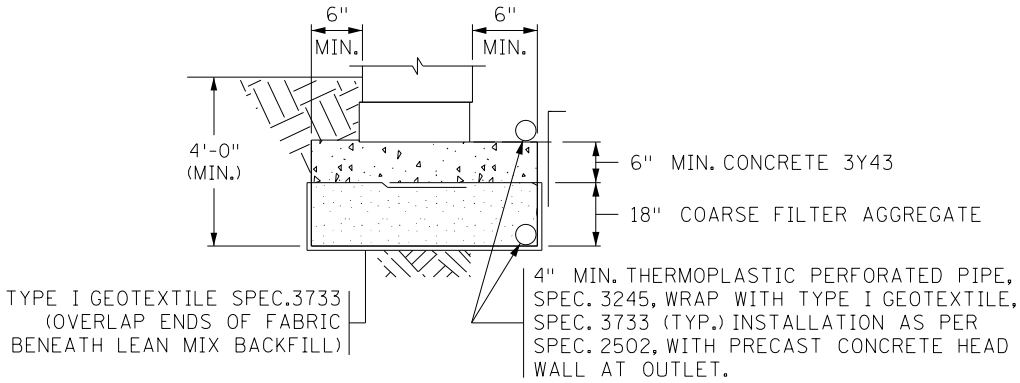

Figure 2411-6 - Composite leveling pad detail (gravity walls only)

N. No drainage systems other than what is required for the wall and highway drainage shall be placed within the reinforced earth zone. The wall design shall include necessary details or design modifications to accommodate the drainage system. The placement of the drainage system shall occur only during construction backfilling of the wall.

O. PMBW's with earth reinforcement shall include a drainage system on top of the concrete leveling pad at the interface of the reinforced and the retained soil (see Figures 2411-2 and 2411-10). Gravity PMBW's with a concrete only leveling pad shall include a drainage system on top of the concrete leveling pad (see Figure 2411-5) Gravity PMBW's with a composite leveling pad shall include a drainage system on top of the concrete portion of the leveling pad and at the bottom of the coarse filter aggregate (see Figure 2411-6).

The drainage system shall consist of perforated pipe per MnDOT 3245 wrapped with geotextile per MnDOT 3733. The pipe shall be placed such that water drains freely from the pipe, typically a 1% grade and 3 foot minimum radius bends. Provide outlets as required due to expected flow rate with a maximum spacing of 150 feet. Outlet the drainage system through the slope in front of the wall with a concrete headwall per MnDOT Standard Plate 3131 or into a drainage structure (see Figure 2411-10). The designer shall take into account the location

of wall drainage systems in the layout and step locations of wall leveling pads and to ensure the wall drainage system is compatible with the leveling pad step locations. The shop drawings for each wall shall denote the location of the drainage system components, including the station of each outlet penetration through the wall and whether the flow is outletted through the slope in front of the wall or into a drainage structure.

P. The ground on the exposed side of the wall shall slope away from the wall per Figure 2411-10. The surface water on the backfill side shall be drained away from the wall to prevent runoff next to the facing blocks and ponding above the reinforced zone or backfill zone. Surface run-off shall not be permitted to pass over the top of the wall. A wall coping, drainage system, or a properly designed ditch shall be used to carry run-off water along the wall to be properly deposited.

Q. PMBW's with earth reinforcement are considered to support traffic (see Item G for criteria for supporting traffic) shall have an impervious layer (geomembrane) placed below the roadway surface to prevent any surface water from entering into the wall system and degrade the soil reinforcement. It shall be installed at the top of the reinforced zone and shall have a minimum coverage length measured perpendicular to the wall face of at least the length of soil reinforcement plus 3 feet. The membrane shall slope at 20 maximum (H) to 1 (V) away from the wall. The impervious layer shall be drained properly to prevent ponding above. Contractor submitted shop drawings shall include specific details and dimensions addressing the placement of the geomembrane, soil reinforcement elements, drainage system details, pavement materials, and traffic barrier moment slab (as applicable) at the top of the wall. Notify the project engineer of any holes placed in the geomembrane for the installation fence posts, etc.

R. For gravity walls three zones have been identified when utilities are near walls. The zones are referenced in Figure 2411-7.

For purposes of this specification, utilities are defined as any utility requiring a permit as well as State owned utilities and stormwater structures. Dry utilities are defined as facilities that do not carry fluid, examples include power and telephone. Wet utilities are those facilities that carry fluid, but do not include roadway edge drains or subsurface drains associated with the bridge or wall structure.

All wet utilities in zones 1, 2, and 3 require gasketed pipe or joints designed to prevent leakage due to pressurized flow. Casing, where required, will meet MnDOT requirements for casing. Refer to the *MnDOT Policy Statement on Accommodation of Utilities on Highway Right of Way* for casing requirements. The following constraints for utilities in any of the three zones describe requirements for parallel installations, skewed, and perpendicular crossings. The restrictions on utility placement are dependent on their position relative to the structure.

In zone 1, during the construction of a new PMBW, utilities are to be placed outside of zone 1 when possible. If relocation is impractical or impossible, new utilities to be installed and existing utilities to remain in place require Bridge Office approval. However, no new wet utilities may be placed longitudinally (i.e., parallel to the PMBW) in zone 1 of a new or existing footing. New utilities may be placed transversely (i.e., perpendicular to the PMBW) to the structure in zone 1 of an existing footing, with Bridge Office approval of proposed design and construction sequencing. All pipes and conduits must be designed for any surcharge loading due to structure bearing pressures and possible resulting deformations. All wet utilities must be cased in zone 1; if facilities are too large or cannot be cased effectively, a site specific design is required. Utility owners may choose to case dry utilities to allow for future maintenance or access; however, casing is not required for dry utilities. Future open trench excavation is prohibited in order to protect the footing from potential undermining. Other forms of excavation may be permitted in this zone with Bridge Office approval.

In zone 2, new utilities may be installed. Excavation for maintenance or replacement will be permitted with proper sheeting and shoring; no unbraced open cuts will be allowed. Any utilities installed in zone 2 must follow the same casing requirements as in zone 1, with the exception of stormwater facilities. Encasement is required for stormwater pipes with velocities greater than 10 fps, or pipe diameters 54 inches and larger, or pipe materials other than those shown in Standard Plate 3006. Other stormwater facilities need not be cased in zone 2 unless required by contract specifications or as recommended by the Bridge Office.

In zone 3, there are no restrictions for utility installations except for the requirement to use gasketed pipe as needed for wet utilities. If these conditions cannot be met, options include relocation or replacement of the utility or placing the substructure on deep foundations. However, pressurized wet utilities placed in zone 1 must be cased due to the risk of significant soil loss. In lieu of casing, a risk analysis approved by the Regional Bridge Construction Engineer is acceptable for PMBW's on deep foundations.

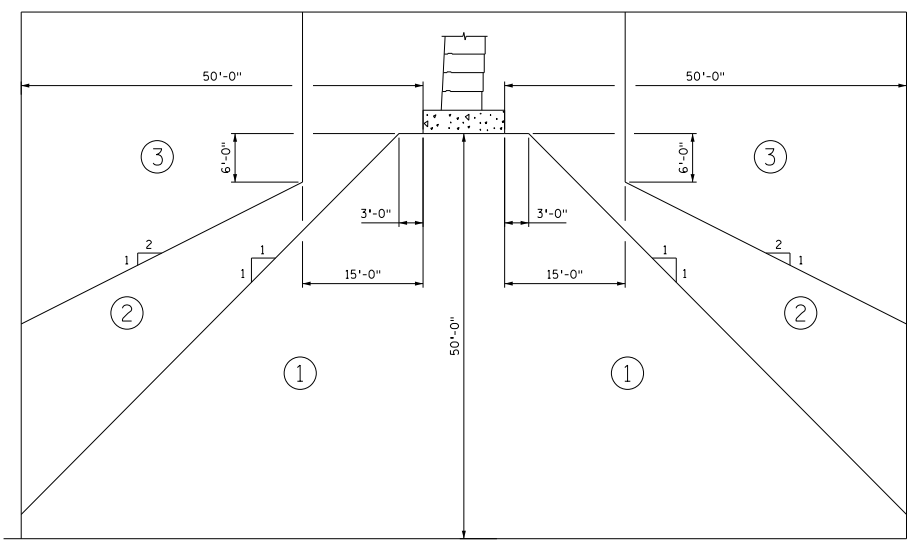

Figure 2411-7 Utilities Near Foundations for PMBW's with Earth Reinforcement

S. For walls with earth reinforcement five zones have been identified when utilities are near walls. The zones are referenced in Figure 2411-8.

For purposes of this specification, utilities are defined as any utility requiring a permit as well as State owned utilities and stormwater structures. Dry utilities are defined as facilities that do not carry fluid, examples include power and telephone. Wet utilities are those facilities that carry fluid, but do not include roadway edge drains or subsurface drains associated with the bridge or wall structure.

In zone 1, during the construction of a new PMBW, utilities are to be placed outside of zone 1 referenced in Figure 2411-8 when possible. If relocation is impractical or impossible, new utilities installed in zone 1 and existing utilities in zone 1 require MnDOT approval. However, no new wet utilities (except for utilities that are used for wall drainage) may be placed longitudinally (i.e., parallel to the wall) in zone 1 of a new or existing wall. New utilities placed in Zone 1 may be placed transversely (i.e., perpendicular to the wall) in zone 1 of an existing wall, with Bridge Office approval of proposed design and construction sequencing. All pipes and conduits must be designed for any surcharge loading due to soil or structure bearing pressures and possible resulting deformations. All wet utilities (except for utilities that are used for wall drainage) must be cased in zone 1; if facilities are too large or cannot be cased effectively, a site specific design is required. Utility owners may choose to case dry utilities to allow for future maintenance or access; however, casing is not required for dry utilities. Future open trench excavation is prohibited in order to protect the wall from potential undermining. Other forms of excavation may be permitted in zone 1 with Bridge Office approval.

In zone 2, new utilities may be installed. Excavation for utility maintenance or replacement is permitted with proper sheeting and shoring; however, unbraced cuts are not allowed. All utilities installed in zone 2 must follow the same casing requirements as in zone 1, except that encasement is required for stormwater pipes with velocities greater than 10 fps, pipe diameters 54 inches and larger, or pipe materials other than design 3006 RCP.

In zone 3, future access through excavation areas is permissible and casing is not required for wet or dry utilities.

In zone 4, future access through the excavation is permissible and casing is not required for dry utilities. Use gasketed pipe as needed for wet utilities. When excavating within this zone, install shoring or sheet piling, without damaging the geomembrane, to protect the reinforced zone

In zone 5, utilities are to be placed outside of the zone when possible. Existing utilities cannot remain in place as they will be disturbed during construction. New utilities may be installed in zone 5 with Bridge Office approval provided that they are placed during the original construction of the wall and are not wet utilities placed longitudinally. All wet utilities placed transversely must be cased and if utilities are too large or cannot be cased effectively, a site specific design is

required. Casing is not required for dry utilities; however utility owners may choose to case dry utilities to allow for future maintenance or access. Future excavation is prohibited.

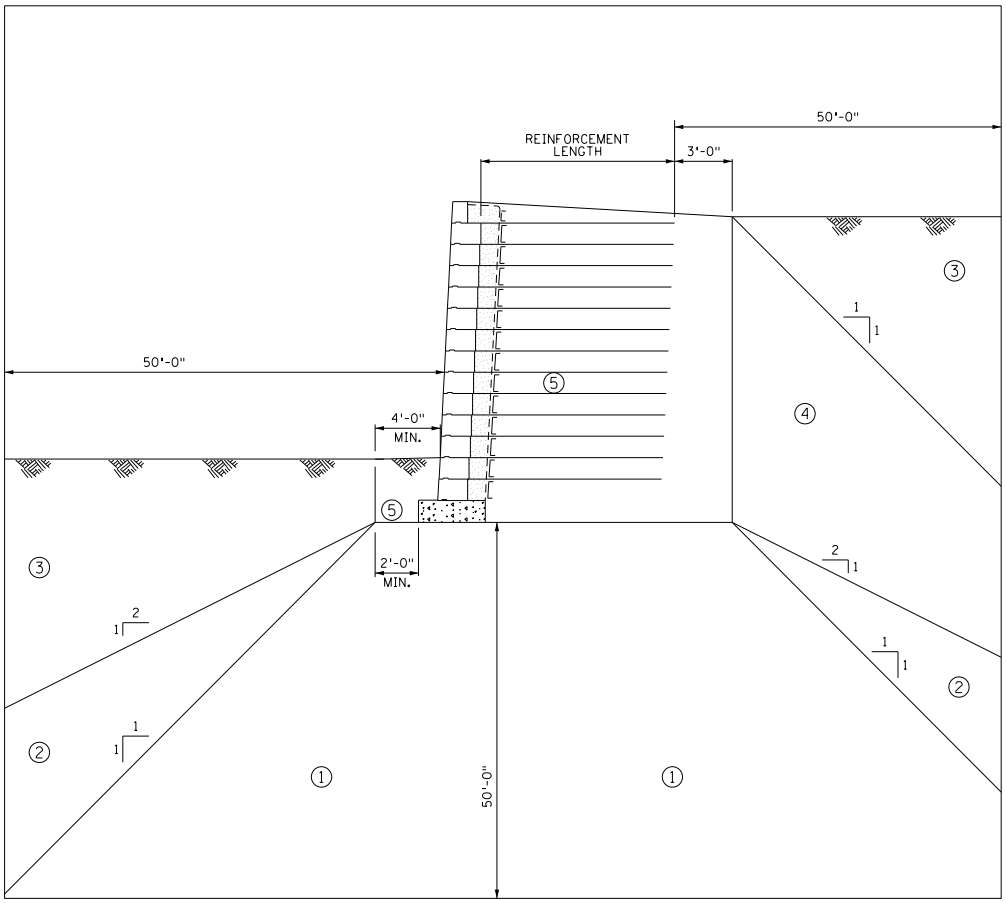

Figure 2411-8 Utilities Near Foundations for PMBW's with Earth Reinforcement

T. No drilling or driving of posts (sign, guardrail, etc.) or other roadside hardware in the reinforced zone shall occur after placement of the reinforced soil. If such roadside hardware is required, the design and plans shall include details such as sleeves to accommodate it.

U. Coping details shall include joints no more than every 20 feet along the length of the wall. Locate coping joints to align with the joints between the blocks.

V. Stability Analysis shall be conducted. All appurtenances behind, in front of, under, mounted on, or passing through the wall such as drainage structures, utilities, noise wall, barrier and moment slab, footings, traffic, slope surcharge or other appurtenances shown on the plans shall be accounted for in the stability analysis. For more detailed stability analysis requirements see Section L.9

W. The wall parapet or freeboard height shall be a maximum of 2' measured from the finished ground line at the top of wall to the top of block or coping. Walls with parapets shall be designed to resist the appropriate pedestrian and/or railing loads specified in the AASHTO LRFD Bridge Design Specifications. Parapet units shall be rigidly connected together to prevent overturning and separation.

Pedestrian railings and connections attached to units shall be designed to resist loads per AASHTO LRFD Bridge Design Specifications, Article 13.8.

X. Gravity PMBW's with open core "bin" type units shall be designed according to AASHTO LRFD Bridge Design Specifications, Articles 11.11.4.3 and 11.11.4.4 with 100% of the soil-fill inside the units for applied bearing and a maximum of 80% of the soil-fill inside the units as effective in resisting overturning. The soil-fill inside on the units shall meet the requirements of MnDOT Spec 3137 CA-3.

Y. The contribution from shear lugs shall not be used when calculating the shear resistance between blocks.

Z. Permanent shims (wood, mortar, sand, bearing pads) shall not be used to level or position the blocks. Temporary shims may be used as long as they are removed before the wall construction is complete or before the final wall inspection, whichever occurs first.

AA. At a minimum, sliding and eccentricity shall be checked between all block interfaces and at the top and bottom of the concrete portion of the leveling pad below grade and at all transitions in block sizes above grade. Bearing shall be checked at the top and bottom of the concrete portion of the leveling pad. The eccentricity limit between the bottom block and the concrete portion of the leveling pad and the concrete portion of the leveling pad and the base soil shall be L/4.

AB. Stacking blocks side by side to achieve a greater wall depth is not permitted.

AC. The Resistance Factors, Φ, for Tensile and Pullout Resistance for PMBWs shall be according to Table 2411-1:

Table 2411-1: Tensile and Pullout Resistance Factors

Reinforcement Type and Loading Condition			Resistance Factor
Geogrid reinforcement and connector tensile resistance		Static loading	0.90
		Combined static/traffic barrier impact[(B)]-PET Geogrid	0.75
		Combined static/traffic barrier impact[(B)]-HDPE Geogrid	1.00
Geogrid reinforcement pullout resistance		Static loading	0.90
		Combined static/traffic barrier impact PET Geogrid [(B)]	1.00
		Combined static/traffic barrier impact HDPE Geogrid [(B)]	1.00

Notes:

A. Apply to gross cross-section less sacrificial area. For sections with holes, reduce gross area in accordance with AASHTO LRFD Bridge Design Specifications Article 6.8.3 and apply to net section less sacrificial area.

B. Combined static/traffic barrier impact resistance factors are not presented in AASHTO.

C. Applies to grid reinforcements connected to rigid facing element, e.g., a concrete block. For grid reinforcements connected to a flexible facing mat or which are continuous with the facing mat, use the resistance factor for strip reinforcements.

AD. Traffic barriers and moment slabs shall meet the requirements of Test Level 4 (TL-4) There are three possible methods for approval of traffic barriers:

a. Test Method: The barrier, connection, wall, backfill, and soil reinforcement shall be crash tested as a system per NCHRP Report 350 requirements.

b. Analytical Method: The FHWA allows the use of bridge barrier designs that are similar to a crash tested design based on an analytic comparison using the methodology outlined in Section 13 of the AASHTO LRFD Bridge Design Specifications. The FHWA policy and an example comparison can be obtained at:

http://safety.fhwa.dot.gov/roadway_dept/policy_guide/road_hardware/ctrmeasures/bridge_railings/

For either method (a) or (b), FHWA acceptance is necessary and shall include a cross section detail of the barrier and slab, including all dimensions and reinforcement sizes and spacing requirements. Calculations validating the AASHTO LRFD Bridge Design Specifications Article 13 provisions must be included. No variation in the details will be allowed without written approval of the FHWA.

c. Test and Analytical Method: The barrier shall be crash tested per NCHRP Report 350 requirements and connection, moment slab, wall, reinforced soil and soil reinforcement shall be designed analytically per NCHRP Report 663 “Design of Roadside Barrier Systems Placed on MSE Retaining Walls”.

Traffic barriers and moment slabs shall be detailed to allow at least 2 inches of horizontal movement prior to making contact with PMBW facing block. The traffic barrier shall also meet the following requirements:

The barrier is cast integrally with a reinforced concrete slab that is placed on reinforced soil (does not sit overtop of the wall). The slab shall be at least 12 inches thick and have a minimum width (normal to the wall alignment) of 8 feet and shall meet the requirements of NCHRP report 663 “Design of Roadside Barrier Systems Placed on MSE Retaining Walls”. There shall be a minimum clearance of 2 inches from the back of slab to the back of the wall facing block or coping.

All joints in the moment slab must be doweled to maintain continuity. The minimum spacing between the dowel joints in a moment slab and the barrier shall be 35 feet for TL-4 and the moment slab shall be continuously reinforced between the joints.

AE. Strength and Service Limit States for Walls with and without Traffic Barriers

Loads and Load Factors for Strength and Service

Table 2411-2: Maximum and Minimum PMBW Load Factors

Force Effect, Q_i	γ_i	
	Max	Min
Vehicular Live Load (LL) for External Stability	1.75	0.00
Vehicular Live Load (LL) for Internal Stability	1.35	0.00
Dead Load of Structural Components and Nonstructural Attachments (DC)	1.25	0.90
Dead Load of Wearing Surfaces and Utilities (DW)	1.35	0.65
Vertical Pressure from Dead Load of Earth Fill (EV)	1.35	1.00
Earth Surcharge Load (ES)*	1.50	0.75

*Earth Surcharge Loads such as stockpiles of fill shall have a load factor of 1.5. The minimum surcharge load to account for roadways, snow loads, future maintenance operations, or future re-grading shall use the maximum Earth Vertical (EV) load factor of 1.35 and minimum load factor of 1.0.

The vertical component of stress, σ_v used in the horizontal load calculation consists of several loads including, Earth Vertical, Dead Load, Dead Load Surcharge, and Live Load Surcharge. An equation for the vertical component of stress, σ_v in ksf shall be taken as:

$$\sigma_v = \gamma_p(\gamma H + \Delta\sigma_{vDL} + \Delta\sigma_{vLL})$$ **(Equation 1)**

where:

γ = unit weight reinforced soil (0.120 kcf)

H = height of soil column behind wall (ft.)

$\Delta\sigma_{vDL}$ = Dead Load Surcharge (ksf)

$\Delta\sigma_{vLL}$ = Live Load Surcharge (ksf) where $\Delta\sigma_{vLL}$=2γ

γ_p = the applicable load factor from Table 2411-2

The corresponding horizontal component of stress σ_H in ksf, acting on the wall shall be taken as:

$$\sigma_H = \gamma_p(\Delta\sigma_H + k_r(\sigma_v))$$ **(Equation 2)**

where:

γ_p = the applicable load factor from Table 2411-2.

$\Delta\sigma_H$ = horizontal stress at reinforcement level resulting from any applicable concentrated horizontal load as specified in AASHTO LRFD Bridge

Design Specifications Article 11.10.10 (ksf), or loads from signs, noise wall, etc.

k_r = horizontal pressure coefficient (dim.)

σ_v = vertical component of stress in (ksf) from Equation 1.

Pullout Resistance Load Combinations for Strength and Service Limit States

For pullout resistance, the loads Earth Vertical, EV, Dead Load Surcharge, $\Delta\sigma_{vDL}$ and Live Load Surcharge, $\Delta\sigma_{vLL}$ shall be defined and applied according to Table 2411-3.

Table 2411-3: Load Definitions and Applications Related to Pullout Resistance for Strength and Service Limit States

Load	Pullout Resistance
Earth Vertical, *EV*	May be included in the pullout resistance calculations.
Dead Load Surcharge, (Due to barrier and attachments) $\Delta\sigma_{vDL}$	Shall be excluded from the pullout resistance calculations.
Live Load Surcharge, (Traffic loading) $\Delta\sigma_{vLL}$	Shall be excluded from the pullout resistance calculations.

The PMBW strength design shall include live load surcharge resulting from traffic loads. The live load surcharge for this case shall be equivalent to a 2 foot soil surcharge. (Use the load factors for Vehicular Live Load from Table 2411-2)

The vertical component of stress used in the pullout resistance calculations σ_v^* in ksf may be taken as:

$$\sigma_v^* = \mathrm{y\,H} \qquad \textbf{(Equation 3)}$$

where:

H = height of soil column behind wall, i.e., to the top of wall (ft.)

γ = unit weight of reinforced soil (0.120 kcf)

AF. Extreme Event II Limit State for Walls Supporting Traffic

Walls supporting traffic shall include computations showing that the Extreme Event II limit state due to traffic impact has been met. The requirements for the Extreme Event II limit state consist of AASHTO LRFD Bridge Design Specifications, FHWA, NCHRP Report 663 and MnDOT requirements.

The total factored force effect, Q shall be taken as:

$$Q = \sum \gamma_i Q_i \leq \varphi R_n$$ **(Equation 4)**

where:

Q_i = force effects from loads specified herein

γ_i = load factors specified in Table 2411-5

R_n = nominal resistance

φ = resistance factor specified in Table 2411-1 applied to nominal resistance

1. Loads and Load Factors for Extreme Event II

The PMBW design for the Extreme Event II limit state shall include static loads due to horizontal earth pressure and dead load due to the barrier and attachments and a dynamic load due to the traffic impact. For the Extreme Event II case, the live load surcharge effects on the reinforcement are incorporated in the reinforcement loads presented in Table 2411-4. As a result for the Extreme Event II case the live load surcharge is not included again as an additional load. The loads for the Extreme Event II limit state are defined as:

a. Horizontal Earth Pressure

The static load due to horizontal earth pressure shall be obtained from the static earth pressure times the tributary area of the reinforcement unit.

b. Barrier and Attachments

The weight of the barrier and attachments above the top of the wall, such as noise walls, signs, etc., shall be included in the reinforcement tensile load calculations and treated as a dead load. For the vertical component of the stress due to dead load surcharge the load distribution width (normal to the wall alignment) shall be equal to the width of the bottom of the barrier denoted as "b_b" in Figure 2411-10.

The vertical component of stress, σ_v consists of Earth Vertical and Dead Load due to the barrier and attachments. An equation for the vertical component of stress, σ_v in ksf shall be taken as:

$$\sigma_v = \gamma_p (\gamma H + \Delta\sigma_{vDL})$$ **(Equation 5)**

where:

γ = unit weight of reinforced soil (0.120 kcf)

H = height of reinforced soil column behind wall (ft.)

$\Delta\sigma_{vDL}$ = Dead Load Surcharge (ksf)

γ_p = the applicable load factor from Table 2411-5

The corresponding horizontal component of stress σ_H in ksf, acting on the wall shall be taken as:

$$\sigma_H = \gamma_p(\Delta\sigma_H + k_r(\sigma_v)) \qquad \textbf{(Equation 6)}$$

where:

γ_p = the applicable load factor from Table 2411-5.

$\Delta\sigma_H$ = horizontal stress at reinforcement level resulting from any applicable concentrated horizontal load as specified in AASHTO LRFD Bridge Design Specifications Article 11.10.10 (ksf), or loads from signs, noise wall etc.

k_r = horizontal pressure coefficient

σ_v = vertical component of stress in (ksf) from Equation 5.

c. Horizontal Traffic Impact Load

The horizontal traffic impact load shall be distributed to the upper 2 layers of soil reinforcement, as specified in Table 2411-4.

Table 2411-4: Maximum Nominal Rupture and Pullout Impact Loads

Layer	Rupture impact load	Pullout impact load
1st Top layer	2300 lb/ft	1300 lb/ft
2nd Top layer	600 lb/ft	600 lb/ft

d. Extreme Event II Load Factors

For the loads included in Extreme Event II limit state the following load factors shall be used.

Table 2411-5: Maximum and Minimum PMBW Load Factors for Extreme Event II.

Force Effect, Q_i	γ_i	
	Max	Min
Vehicular Collision Force (CT)	1.00	NA
Dead Load of Structural Components and Nonstructural Attachments (DC)	1.25	0.90
Dead Load of Wearing Surfaces and Utilities (DW)	1.35	0.65
Vertical Pressure from Dead Load of Earth Fill (EV)	1.35	1.00

NA= Not Applicable

2. Pullout Resistance for Extreme Event II

For pullout resistance, the loads Earth Vertical, EV and Dead Load Surcharge, $\Delta\sigma_{vDL}$ shall be defined and applied according to Table 2411-6. As described, permanent barrier and attachment loads shall be included in the pullout loading calculation and if the designer wishes may be included in the pullout resistance calculation.

Table 2411-6: Load Definitions and Applications Related to Pullout Resistance for Extreme Event II

Load	Pullout Resistance
Earth Vertical, *EV*	May be included in the pullout resistance calculations.
Dead Load Surcharge, (Due to barrier and attachments) $\Delta\sigma_{vDL}$ (See "a" below)	May be included in the pullout resistance calculations.
Live Load Surcharge, (Traffic loading) $\Delta\sigma_{vLL}$	Shall be excluded from the pullout resistance calculations.

a. If Dead Load Surcharge is included in the pullout resistance (per Table 2411-4), the vertical component of stress used in the pullout resistance calculations σ_v^* in ksf shall be taken as:

$$\sigma_v^* = \gamma H + \Delta\sigma_{vDL} \qquad \textbf{(Equation 7)}$$

in which:

$$\Delta\sigma_{vDL} = \begin{pmatrix} \dfrac{W}{1.5'+d_n} & \text{for } Be1_n \le x \le Be2_n \\ 0 & \text{for } x < Be1_n \; or \; x > Be2_n \end{pmatrix}$$

where:

H = height of soil column behind wall, i.e. to the top of the wall (ft.)

γ = unit weight of reinforced soil (0.120 kcf)

W = total weight of barrier W_b, slab W_s and attachments W_a (kips)

d_n = depth of earth reinforcement below the bottom of the barrier (ft.), for the particular layer of soil reinforcement being investigated. (See Figure 2411-9)

$Be1_n$, $Be2_n$, = is the load influence dimensions (See Figure 2411-9)

b. If Dead Load Surcharge is not included in the pullout resistance, the vertical component of stress used in the pullout calculations σ_v^* in ksf may be taken as:

$$\sigma_v^* = \gamma H \qquad \textbf{(Equation 8)}$$

where:

H = height of soil column behind wall, i.e., to the top of wall (ft.)

γ = unit weight of reinforced soil (0.120 kcf)

c. Resistance Factors for Extreme Event II

The resistance factors shall be taken from the resistance factor Table 2411-1

For geosynthetic reinforcements, the nominal strength used to structurally size the reinforcements to resist the impact load may be increased by eliminating the reduction factor for creep, as allowed for the internal stability in seismic design.

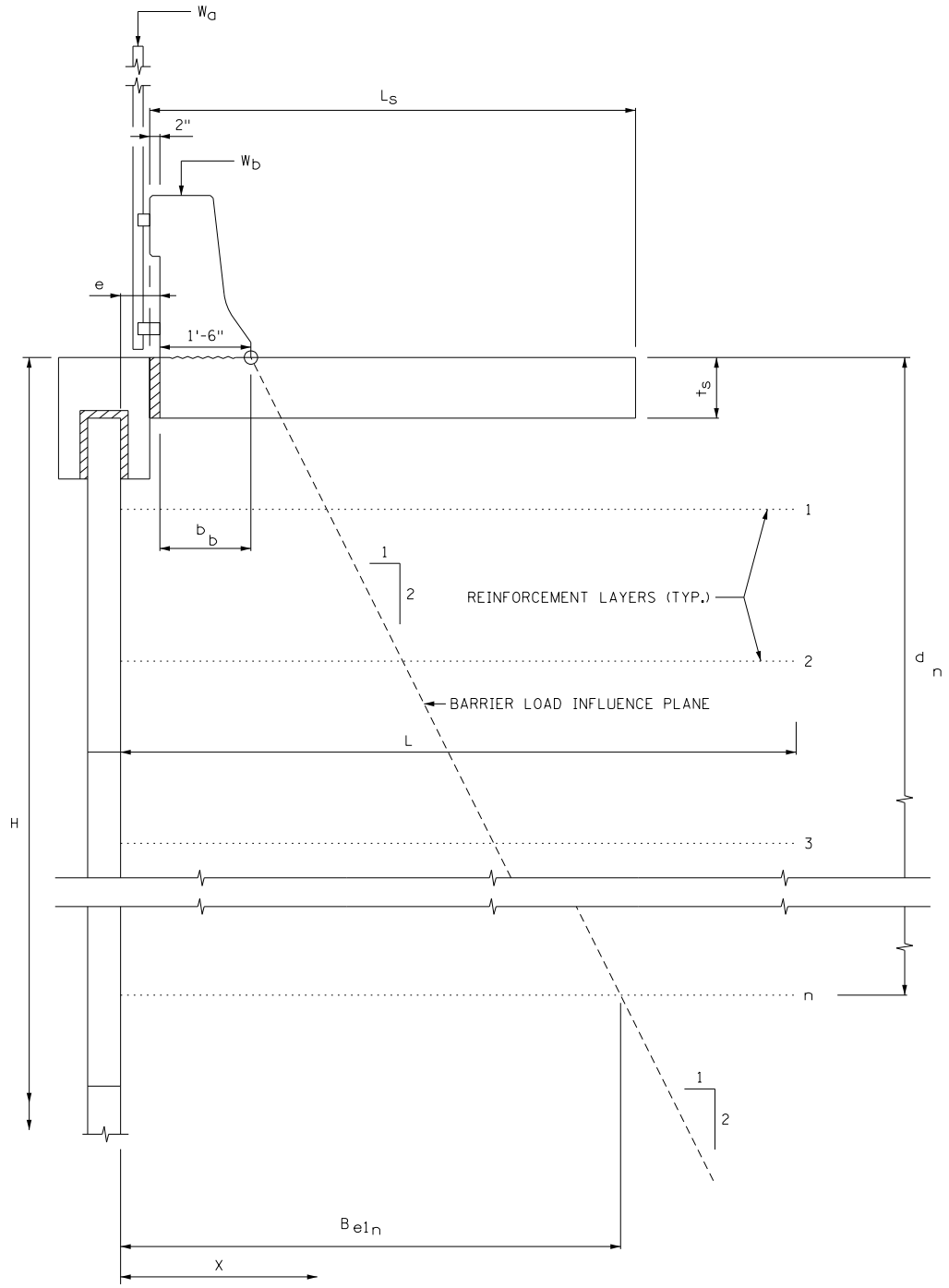
Wa
Ls
2"
Wb
e
1'-6"
ts
1
bb
1
2
REINFORCEMENT LAYERS (TYP.)
2
dn
BARRIER LOAD INFLUENCE PLANE
L
H
3
n
1
2
Beln
X

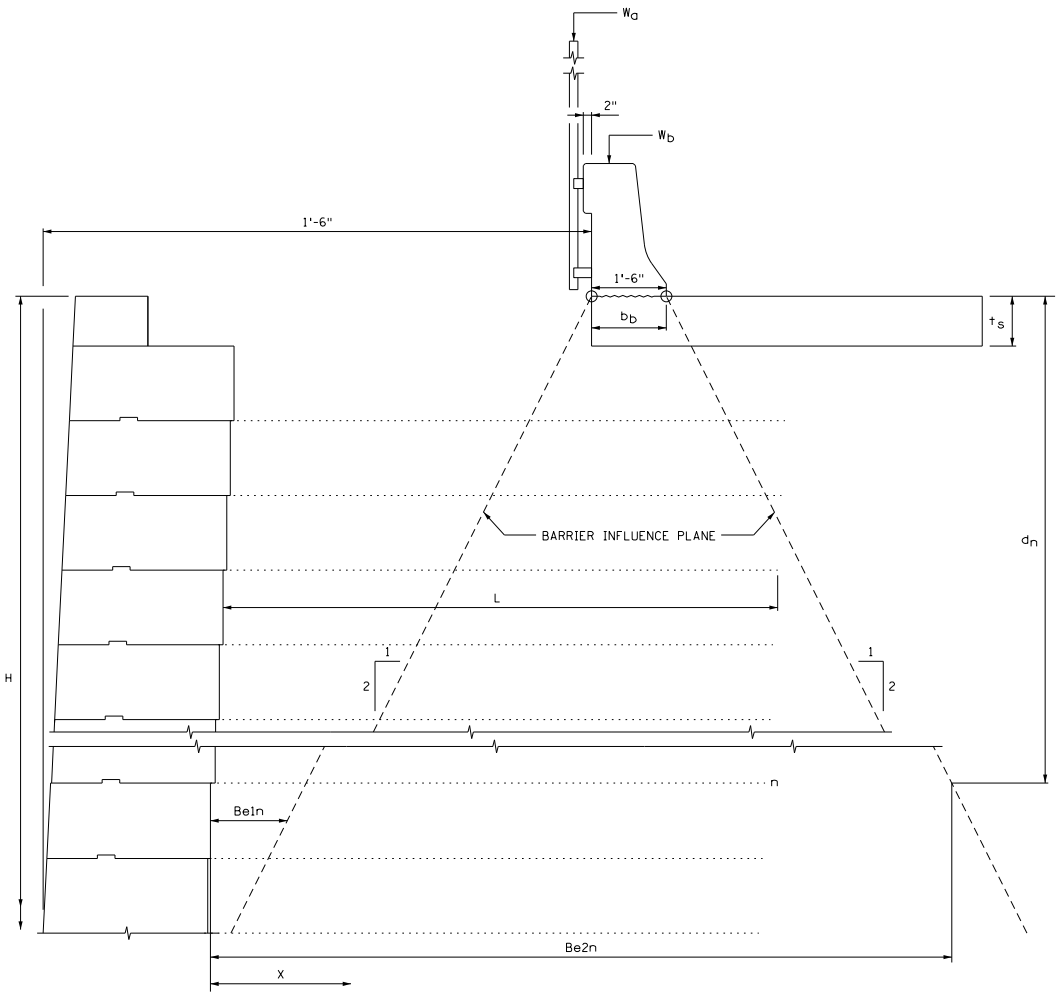

Figure 2411-9 Distribution of loading from barrier, moment slab and attachments used in reinforcement tensile load or pullout resistance calculations for Extreme Event II.

S-84.2 SUBMITTAL REQUIREMENTS AND MNDOT QUALITY ASSURANCE (QA) REVIEW

Shop Drawing and Calculation Submittal:

The Contractor shall be responsible to review all available geotechnical investigation reports, and the Contractor's signature on the proposal shall certify that this review has been performed and that any relevant geotechnical information has been provided to the designer and PMBW System Supplier of the PMBWs.

For each wall the PMBW system supplier shall submit two sets of complete, certified and independently checked design computations, five sets of certified shop drawings, and one "PMBW Design Certification Letter" to the Engineer for quality assurance (QA) review allowing at least 30 calendar days for review before beginning the fabrication and construction of the wall system. The shop drawings shall comply with the design plans, and include all details, dimensions, quantities and any information required to lay out and construct the wall.

The submitted information shall include, but not be limited to, the following:

A. Plan shop drawing for the full length of EACH wall containing the following:

1. Beginning and ending stations of wall relative to roadway centerline and any changes in wall alignment.
2. Locations of bridges, piles, existing and other proposed retaining walls, slopes or other objects.
3. Locations for all drainage structures, pipes, signs, light poles and other conflicting existing and planned structures or obstructions as provided in the contract documents. Additional typical sections shall be provided whenever changes happen to the wall such as the addition or change in moment slab or coping, transition to approach span of bridge, etc.
4. Limits of soil reinforcement and location where changes in length and/or size of reinforcement occur.
5. Location of existing and planned utilities as provided in the contract documents.
6. Existing and proposed ground elevations.
7. Limits for any construction constraints such as right-of-way, easements, staged construction, etc.
8. Horizontal and vertical curve data for curved walls.

B. Cross section drawing for EACH wall and design change identifying:

1. Location and batter of the wall face.
2. Reinforcement type, dimensions, and vertical spacing.
3. Wall treatment, including impervious geomembrane, traffic barrier(s), cast-in-place moment slab (including potential interference with soil reinforcement), runoff collection, subsurface and surface drainage pipes & structures.
4. Elevation of leveling pad.
5. Depth of wall embedment.
6. Limits of excavation.
7. Block joint cover (geotextile filter fabric) location and generic material type.

C. Elevation view in equal horizontal and vertical scale for the full length of EACH wall showing:

1. Top and bottom wall elevations, in-place ground line, and finished grade elevation at top and bottom of wall.
2. Details and dimensions for foundation and leveling pad, including steps in the footing or leveling pad.
3. Location of drainage structures and construction details around these structures. Locations and details of any penetrations in the facing blocks,
4. Dimension and location of reinforcement.
5. Maximum applied bearing pressure (Strength and Service) under the wall for each reinforcement length and owner specified Service and Strength nominal bearing resistance.
6. Block type and identification number for each block.
7. Block configuration for standard and special cut blocks.
8. Summary of quantities for each wall.
9. Block dimensions.

D. Horizontal and vertical curve data affecting the wall. Match lines or other details to relate wall stationing to centerline stationing.

E. Connection details and dimensions between facing blocks, embedded devices and soil reinforcement.

F. Details for construction, including but not limited to:
   1. Termination at cast-in-place structures and any adjacent slope construction.
   2. Connection details and reinforcement placement requirements around all obstructions including light and sign supports.
   3. Details for constructing blocks lock and soil reinforcement at corners.
   4. ALL internal drainage pipes, systems, and facilities.
   5. Other details such as coping or barrier, guardrail, fencing, or noise wall.
   6. Impervious geomembrane to block connection detail, and construction sequencing notes.
   8. Location of ALL subdrains and outlets of the internal drainage system.
   9. Locations and details of any required penetrations in the blocks.

G. Architectural details, including surface pattern and texture, joint layout and details, and surface finish and color. (See the Project Aesthetic Guidelines for requirements) To match the architectural design theme within the I-494 Corridor, the pattern/texture required will be Architectural Concrete Texture (Random Batten). Include segments of Architectural Concrete Texture on Elevation Views described in Section “C” above. Example details for Architectural Concrete Texture (Random Batten) are available from the MnDOT Architectural Specialist in the MnDOT Bridge Office.

H. Name of PMBW System Supplier and their QA/QC documents.

I. Test wall construction, when specified.

J. General notes required for constructing the wall:
   1. Design assumptions regarding material properties, material qualities and construction method.
   2. Wall layout information.
   3. Requirements for reinforced soil compaction.
   4. Materials used in construction.
   5. Geotextile filter fabric locations
   6. Reinforcement handling, storage, preparation, and placement information and requirements.
   7. Angle of internal friction used for the design.

K. Copy of geotechnical report showing:

   1. Plan view of sampling and field-testing locations across project site.
   2. Subsurface profile across project site.
   3. Boring logs.
   4. All laboratory test data and results.

5. Engineering properties of the foundation soil, the reinforced soil, and the retained soil as appropriate to ensure the proper long-term performance of the PMBW structure.
6. Required soil modification, if any
7. External (global) stability analysis.
8. Service and Strength bearing pressure beneath the wall footing and the reinforced soil mass.
9. Settlement analysis and anticipated differential settlement for the foundation soil beneath the wall and the reinforced earth mass.
10. Groundwater, any free water conditions, anticipated high water conditions and any required drainage schemes.
11. Recommendations concerning items that may be appropriate to ensure the proper long-term performance of the PMBW structure.
12 Internal friction angle and unit weight of the retained soil.

L. Copy of calculations showing:

1. Table of contents page for design computations.
2. List of all assumptions used for all calculations and rationale for each assumption.
3. Design notes page with explanation of symbols and details of any computer programs used. Tabulate all calculated capacity to demand ratios to ensure internal, external and compound stability.
4. Block design including the design of reinforcement connectors and internal reinforcement.
5. Calculations and test results verifying the design life of the soil reinforcement.
6. Computed applied bearing pressure and factored bearing resistance beneath the wall and the reinforced soil mass assuming an estimated total settlement of 1 inch. The computed applied bearing pressure shall be compared explicitly to the owner specified factored bearing resistance.
7. Barrier/slab detail above wall, when applicable, including all reinforcement.
8. Stability analysis shall include internal and external stability. External stability consists of evaluating sliding, limiting eccentricity (overturning), bearing resistance and global (overall) stability. All appurtenances behind, in front of, under, mounted on, or passing through the wall such as drainage structures, utilities, noise wall, barrier and moment slab, footings, traffic, slope surcharge or other appurtenances shown on the plans shall be accounted for in the stability analysis.

   Global stability checks and calculations shall be conducted by the MnDOT Foundations Office.

   The wall system supplier is not required to perform a compound stability check.

9. Magnitude, direction, and location of the forces from any external loads such as traffic surcharge, traffic barrier, moment slab and attachments including impact loading, lighting, signs, bridges, slope surcharge etc. The design and detailing of the wall system shall take into account these

external loads. Walls supporting traffic barriers shall provide complete details and calculations showing conformance with the requirements listed above for Extreme Event II traffic impacts.

Provide connection details for all reinforcements interfered with by obstructions. Provide design computations demonstrating that the details and wall system meets all design and construction requirements in the obstruction area.

10. A set of project-typical hand calculations verifying computer generated output.
11. Verification of the design properties/parameters from material tests. Include results from creep, durability, construction induced damage, junction strength tests, and any other applicable tests. Indicate the appropriate standardized test designation followed for each test.
12. Friction angles used in design for reinforced and retained soil.
13. Soil reinforcement length based on global stability.

All design calculations shall be based on assumed conditions at the end of the design life.

M. Indicate the following performance requirements:

1. Anticipated and tolerable movement of the structure for both horizontal and vertical settlements or movements both along and perpendicular to wall.
2. Tolerable block movement.
3. Monitoring and measurement requirements, if any.

N. All other appropriate design computations.

Shop Drawing and Calculation Submittal Review:

The above information shall be submitted to the Engineer for QA review. MnDOT's QA review of the computations and shop drawings shall not relieve the Contractor of sole responsibility for the wall design, details, computations, and the submission of complete shop drawings for the accurate construction and performance of the wall. The Contractor shall be solely responsible for ensuring that the information submitted by the wall designer and the PMBW System Supplier is in accordance with all contract plans and shall contain all material, fabrication and construction requirements for erecting the wall system complete in place. (For more information about routing and review of submittals see Technical Memorandum No.: 08-11-MRR-02)

S-84.3 MATERIALS

All Materials for the wall system shall conform to requirements of these Special Provisions.

A. Acceptance of Materials:

Unless stated otherwise, at least 3 weeks prior to construction of the PMBW the Contractor shall furnish the Engineer Certificates of Compliance for each material listed below, certifying that all materials comply with the applicable contract specifications, including a copy of all test results. All tests shall be performed by an independent testing laboratory. A Certificate of Compliance shall be provided by the Contractor for each material source. A new Certificate of Compliance shall be provided any time the Contractor changes the source of materials.

Acceptance will be based on the Certificate of Compliance, accompanying test reports, visual inspection, and/or tests ordered or performed independently by the Engineer. The Engineer retains the right to order or perform independent tests to verify information.

B. **Reinforced Soil**: Soil used in the reinforced zone shall comply with MnDOT 3149 and shall meet the following additional requirements:

1. Contractor Certificate of Compliance: At least 3 weeks prior to construction of the PMBW the Contractor shall furnish the Engineer a Certificate of Compliance certifying that reinforced soil complies with the applicable contract specifications listed below, including a copy of all test results. Certificate of Compliance shall be provided by the Contractor for each source or a rate of 1 per 50,000 yd^3. A new Certificate of Compliance shall be provided any time the Contractor changes the source of the reinforced soil materials or the material within a given source changes.

   a. Screened virgin aggregate material meeting the requirements of 3137.2B3, Class C.

   b. Angle of Friction Requirements:

   Determine angle of friction with direct shear testing (MnDOT Lab Manual method 1309) assuming consolidated drained conditions. Tests to be performed on portion of sample passing the #10 sieve and compacted at optimum moisture content to 95% determined by MnDOT Lab Manual method 1305.

Table 2411-7: Friction Angle:

TEST	SPEC. RANGE	TEST METHOD	TESTING RATE
Angle of Friction	≥ 34 Degrees	MnDOT Lab Manual Method 1309	1/50,000 cu. Yd. per source

c. Table 2411-8: Electrochemical Requirements for Walls with Geosynthetic Reinforcements:

Base Polymer	TEST	SPEC. RANGE	TEST METHOD	TESTING RATE
High Density Polyethylene (HDPE) and Polypropylene (PP)	pH	3≤ pH	AASHTO T 289	1/50,000 cu. Yd. per source
Polyester (PET)	pH	3≤ pH ≤ 9	AASHTO T 289	1/50,000 cu. Yd. per source

2. Contractor Certificate of Compliance for Sieve Analysis: At least 3 weeks prior to construction of the PMBW the Contractor shall furnish the Engineer a Certificate of Compliance certifying that reinforced soil complies with the applicable contract specifications listed below, including a copy of all test results. Certificate of Compliance for Sieve Analysis shall be provided by the Contractor for each source or a rate of 2 per 50,000 yd^3. A new Certificate of Compliance shall be provided any time the Contractor changes the source of the reinforced soil materials or the material within a given source changes.

   a. Sieve Analysis Requirements:

   Sieve analysis tests shall be performed according to MnDOT lab manual methods 1202 and 1203 or in the field according to MnDOT Grading and Base Manual method 5-692.215 and meet the requirements in Table 2411-5 and Table 2411-6.

Table 2411-5 Reinforced Soil Sieve Analysis Requirement

Sieve Size	Percent Passing
¾ in	100

Table 2411-6 Reinforced Soil Sieve Analysis Ratio Requirements

Percent Passing Ratio		Requirement
No. 40 / No. 10	=	0.65
No. 200 / No. 10	=	0.10

C. **Soil Reinforcement**: At least three weeks prior to the start of construction the Contractor shall furnish the Engineer a Certificate of Compliance certifying that all soil reinforcement complies with the applicable contract specifications listed below, including a copy of all test results. A new Certificate of Compliance shall be provided with each additional shipment of reinforcement or any time the Contractor changes the source of reinforcement.

Geogrid reinforcement shall be oriented, drawn, long chain high-density polyethylene containing stabilizers and inhibitors added to the base plastic for resistance to ultraviolet and heat degradation. Geogrid reinforcements and their connection devices shall be the same connection devices and reinforcement as approved by MnDOT in the pre-qualification application of the PMBW system. Geogrid reinforcement shall be tested in accordance with ASTM D6637 at a minimum rate of 1 test per 50,000 yd^2 for each type of geogrid used per the MnDOT Schedule of Materials Control Provide tensile strength values as minimum average roll values (MARV) in accordance with ASTM D4769.

D. **Connectors and Joint Materials:** At least 3 weeks prior to the start of construction the Contractor shall furnish the Engineer a Certificate of Compliance certifying that all connectors and joint materials comply with the applicable contract specifications listed below, including a copy of all test results. Flexible cable lifting devices shall be galvanized per MnDOT 3394, except for the finely stranded cable type which shall be stainless steel. The requirements of S-H.2 (below) shall also apply.

E. **Geotextile:** At least three weeks prior to the start of construction the Contractor shall furnish the Engineer a Certificate of Compliance certifying that all geotextiles comply with the applicable contract specifications listed below, including a copy of all test results. The Certificate of Compliance shall include a manufacturer's certificate stating the furnished geotextile meets the requirements of the specifications, as evaluated by the manufacturer's quality control program. (suitable for use on concrete surfaces in cold weather application) to insure that it doesn't move out of place during backfilling operations. Geotextiles shall be tested at a rate of 1 test per 50,000 yd^2 for each type of geotextile.

F. **Impervious Layer:** At least three weeks prior to the start of construction the Contractor shall furnish the Engineer a Certificate of Compliance certifying that all impervious geomembrane material complies with the applicable contract specifications listed below. A copy of all test results shall be provided by the Contractor to assure contract compliance. A new Certificate of Compliance shall be provided any time the Contractor changes the source of material or at a rate of 1 test per 50,000 yd^2 for each type of impervious layer.

The impervious layer material shall be a puncture-free and flexible, roughened sheet HDPE, LLDPE or PVC geomembrane. The geomembrane shall have both sides textured with a rough finish and have a minimum thickness of 30 mils (0.75 mm) in accordance with ASTM D5994 for Textured Geomembranes. The geomembrane manufacturer shall certify that the geomembrane properties have been tested by lot and meet the minimum specification property requirements for 30 mil (0.75 mm) material as specified in the following industry standards:

Table 2411-7: Geosynthetic Testing Standards:

Material Type	Organization	Standard
HDPE	Geosynthetic Institute	GRI Test Method GM13 Standard Specification for "Test Properties, Testing Frequency and Recommended Warranty for High Density Polyethylene (HDPE) Smooth and Textured Geomembranes"
LLDPE	Geosynthetic Institute	GRI Test Method GM17 Standard Specification for "Test Properties, Testing Frequency and Recommended Warranty for Linear Low Density Polyethylene (LLDPE) Smooth and Textured Geomembranes"
PVC	American Society of Testing and Materials	ASTM D7176 - 06 Standard Specification for Non-Reinforced Polyvinyl Chloride (PVC) Geomembranes Used in Buried Applications, and 84.3.1 **ASTM D7408 - 08 STANDARD SPECIFICATION FOR NON REINFORCED PVC (POLYVINYL CHLORIDE) GEOMEMBRANE SEAMS**

In addition to the standard specification requirements, the following minimum properties shall be required regardless of the type of geomembrane. Samples of the geomembrane will be collected upon delivery to the site and, at the engineer's discretion, sent to an independent laboratory for verification testing.

a. Minimum Thickness, 30 mils

Tested per ASTM D5199 or ASTM D5994 for Textured

b. Minimum Tear (Die C), 10 lbs

Tested per ASTM D1004

c. Minimum Puncture Resistance, 32 lbs

Tested per ASTM D4833

The geomembrane shall be tested at a rate of 1 test per 50,000 yd^2 for each type of geomembrane used.

G. **Prefabricated Modular Blocks:** The precast concrete blocks shall be wet-cast and conform to the following requirements:

1. Concrete reinforcement (if any) shall conform to MnDOT 2472 and shall be galvanized per MnDOT 3394, or epoxy coated per MnDOT 3301. All reinforcing and attachment devices shall be carefully inspected by the Contractor to insure they are true to size and free from defects that may impair their strength and durability.
2. Steel connection elements, tie strip guides or other galvanized devices shall not contact or be attached to the facing block reinforcement steel, unless the block reinforcement is also galvanized.
3. The minimum rebar cover requirement is 1.5 inches.
4. The date of manufacture and manufacture's unique identification shall be clearly scribed or stenciled with waterproof ink on the back face of each block.

5. Block colors shall be consistent and free of stains, and blocks should be free of defects, cracks or chips. Blocks that contain visible defects such as, but not limited to, vertical or horizontal seams, conspicuous stains, form marks or color streaks shall be repaired to the satisfaction of the Engineer or removed and replaced at the Contractor's expense.
6. Blocks may be stockpiled if all blocks have the same specification and if the entire production is dedicated to MnDOT projects.
7. All units shall be manufactured within the following tolerances:

    a. Height: +/- 3/16 inch
    b. Width: +/- 1/2 inch unless field cut for fitting purposes
    c. Depth: No less than the unit design depth (i.e. 24", 26", 48") with textured face portion of the block considered as 4 inches maximum.
    d. Squareness shall be determined by measuring diagonally across the face; the difference between the two diagonals shall not exceed ½ inch.
    e. Formed patterns or textures designed to be oriented horizontally or vertically shall be aligned with both the horizontal and vertical edges of the block, and the pattern/texture shall cover the entire face of the block.
    f. If required, allowance shall be made for texture relief up to 2 inches in depth measured from the front face of the block.
8. The block shall be cast on a level surface and a random sample of the concrete shall be taken in accordance with AASHTO T141.
9. Concrete shall be mix number 3Y43 or an air-entrained mix with a minimum compressive strength of 4300 psi, using an approved design meeting the requirements of 2461. If the system requires a higher strength concrete, the mix design shall meet the requirements of MnDOT 2461 for that higher strength. Coarse aggregate shall meet the requirements of 3137.2D2 or shall be "Class A" per specification 3137.2B1.
10. All units shall be handled, stored, and shipped in a manner to eliminate the risk of chipping, discoloration, cracks, fracture, and excessive bending stresses. Blocks in storage shall be supported on firm blocking to protect the block connection devices and the exterior finish unless stored on a paved or hard compacted surface. Blocks shall reach 100% of design strength before shipment, as demonstrated by control cylinders kept with the product.

The PMBW's shall be cast on a flat and level area and shall be fully supported until a compressive strength of 1,000 psi has been attained.

11. The wall supplier shall provide a technical representative in the plant during the first three days of production or ensuing production period if needed or until the Materials Engineer determines that the plant has demonstrated the ability to fabricate the blocks without technical assistance or MnDOT oversight. When so directed by the Materials Engineer, the technical representative shall return to oversee manufacture of blocks, and shall remain until relieved of that responsibility by MnDOT.

H. **Block Rejection:** Blocks may be rejected because of failure to meet any of the requirements specified above. In addition, any or all of the following defects shall be sufficient cause for rejection:

1. Defects that indicate imperfect molding, including imperfections of the form liner, if there is one.
2. Bending or misalignment of connections.
3. Defects indicating honeycombing or open texture concrete.
4. Cracked or severely chipped blocks. Blocks with cracks wider than 0.01 inch or penetrating more than 1 inch or longer than 12 inches.
5. Color variation on front face of block due to excess form oil or other reasons.
6. Tie strips, connecting pins, PVC pipe, or lifting devices set to improper dimensions or tolerances shown on the plans and specified above.
7. Any damage that would prevent making a satisfactory joint.

I. Gabion basket's used in gabion walls shall conform to MnDOT 2472 and shall be galvanized per MnDOT 3394 and epoxy coated per MnDOT 3301.

J. If limestone rock is placed in Gabion baskets it shall not be from the Platteville formation.

S-84.4 CONSTRUCTION REQUIREMENTS

A. **General Requirements**: An PMBW Preconstruction Meeting shall be held at least 15 days before wall construction begins and after the Department has completed the QA review of the shop drawings and design calculations. At a minimum this meeting shall be attended by the Engineer, Contractor, the Contractor who will erect the wall, and a technical representative from the PMBW system supplier. The Contractor shall provide a complete written sequence of PMBW construction at the meeting and review the sequence, any construction issues, the specifications and the PMBW system requirements and determine any issues that need to be resolved prior to construction.

The wall supplier shall provide a documented Field Construction Manual specific to MnDOT requirements and describing in complete details the sequence of construction steps. The PMBW system supplier shall also provide an experienced technical representative on the project site during the erection of the first full height section, and the following sections if needed until the Engineer determines that the Contractor has demonstrated the ability to construct the wall system on his own meeting all project construction requirements. The PMBW system supplier technical representative shall be available to provide instructions, guidance in pre-construction activities, and on-site technical assistance anytime during construction at no additional cost to MnDOT. Every

step in the sequential construction of the PMBW system shall comply with the construction requirements and tolerances. All instructions from the PMBW system supplier that are not contrary to these special provisions shall be followed unless otherwise directed in writing by the Engineer.

The Contractor shall be solely responsible to coordinate construction of PMBWs with bridge, roadway, and other construction and ensure that resulting or existing obstructions shall not impact the construction or performance of the wall.

All PMBW system blocks shall be constructed in accordance with the QA reviewed shop drawings, including the architectural features specified.

B. **Foundation Preparation:** The following statements shall apply to MnDOT 2451: The foundation for the structure shall be graded level for a width equal to the length of the soil reinforcement element or as shown on the plans. The entire graded area shall be compacted according to MnDOT 2451 before wall construction begins.

Prior to wall construction and subsequent to clearing and grubbing any unsuitable foundation material shall be excavated and replaced with granular fill per these specifications, and compacted with a smooth wheel steel vibratory drum roller. If the PMBW bears on a rocky foundation or on bedrock, place 6 inches of reinforced soil per the Materials section of these specifications, under the soil reinforcement. Compact as specified above.

The Contractor shall develop and implement a plan to protect the open excavation from surface drainage during construction and until the wall is placed. The Contractor shall protect the excavation against collapse.

C. **Reinforced Soil Placement:** Soil placement shall closely follow erection of each row of blocks. Soil shall be placed in a way that does not cause damage or disturbance to the wall or soil reinforcement. Soil reinforcement shall be maintained in a horizontal position along its length and shall be placed perpendicular to the wall face, except as shown in the plans.

The backfilling and compaction shall comply with MnDOT 2451 and 2105 and the maximum lift size shall be 12 inches loose.

Compaction beyond 3 feet of the back face of the prefabricated modular blocks shall be compacted to a density of not less than 100 percent of maximum density using the specific density method in accordance to MnDOT 2105.3 F1.

Compaction within 3 feet of the back face of the concrete blocks shall be achieved by means of a minimum of 3 passes with a lightweight mechanical tamper, roller or vibratory system. The number of passes needed for the compaction within the 3 foot zone shall be determined using a test strip with the proposed compactor and lift height(s) for this zone. The maximum lift size within 3’ shall be 8 inches loose and it shall be compacted to a density of not less than 95 percent of maximum density using the specific density method in accordance to MnDOT 2105.3 F1. The quality assurance density tests shall be performed according to MnDOT 2105.3 F1..

Sieve analysis testing for quality control shall be performed according to **Section S-84.3B.1** of this specification. Sieve analysis testing for quality assurance shall be performed according to MnDOT 2105.

The PMBW system supplier may require the Contractor to perform quality control density tests beyond the quality assurance tests required by MnDOT schedule of Materials Controls. The contractor shall perform the PMBW system suppliers required tests and submit the test results to the Engineer at no additional cost.

No drilling or driving of piles, posts (sign, guardrail, etc.) or other roadside hardware through the reinforced soil shall occur after placement of fill.

At the end of each day's operations, slope the last lift of reinforced soil to direct surface runoff away from the wall. Do not allow surface runoff from adjacent areas to enter the wall construction area.

The area in front of the wall and around the leveling pad should be backfilled as soon as practically possible. Tamping type (sheep's foot) rollers shall not be used for compaction of the reinforced soil.

At no time shall construction equipment come in direct contact with the soil reinforcement. A minimum reinforced soil thickness of 3 inches for steel soil reinforcement and 6 inches geosynthetic soil reinforcement shall be required prior to operation of vehicles. Each course or layer shall be compacted up to or slightly above the location of the next connection for the soil reinforcement prior to placing the next layer of reinforcement as designated in the erection sequence provided by the manufacturer of the wall system.

If the reinforced soil material changes or a new source or material is used, construction of the PMBW shall be halted until the Contractor provides a new Certificate of Compliance and accompanying test reports.

D. **Leveling Pad:** For PMBW's with earth reinforcement an unreinforced cast-in-place concrete leveling pad shall be provided at the foundation level for each base unit of the wall system and shall be continuous at all steps. The leveling pad shall be concrete Mix Number 1C42 and have minimum dimensions as shown in Figure's 2411-5 and 2411-6.

Gravity PMBW's shall be set on either a concrete leveling pad (meeting the minimum requirements above) or a composite leveling pad.

A wider leveling pad shall be used for walls with curves or corners to ensure blocks fully bear on the leveling pad. The bottom of pad elevation shall be a minimum of 4 feet below finished ground line. Construct the leveling pad so that the surface does not vary ¼ inch in 10 feet along the length of the wall nor more than 1/8" across the width of the leveling pad from plan dimensions. The leveling pad shall have a compressive strength of at least 1500 psi and cured a minimum of 24 hours before blocks are placed. During erection blocks shall not extend more than 6 inches beyond the end of the leveling pad at steps. Fill the void with reinforced soil immediately after the first row of blocks are set.

E. **Wall Erection:** Storage, handling and transportation shall avoid damage or discoloration of the blocks. If water has ponded in front of the wall; pump the water out prior to constructing the wall and reinforced zone. All PMBW's shall be constructed in accordance with approved shop drawings and in conformance with this specification,

including the architectural features specified. PMB's shall be placed so that their final position is vertical or battered as shown on the plans. Construction should always begin from existing structures toward the open end of the wall. For erection, blocks which are handled by means of lifting devices connected to the upper edge of the block. After placing the blocks the holes for lifting devices in the top course of blocks shall be filled and grouted with MnDOT Spec 2506.2B Grout. Place the initial row of blocks on the centerline of the leveling pad and level the block. Permanent bearing pads to level the blocks are prohibited unless an approved submittal contains them specifically. Use wooden wedges for temporary support to set the initial block batter. If wedge height is greater the ½ inch start the erection over. Adjacent blocks shall be clamped together to prevent individual block displacement. Blocks should be placed in successive horizontal lifts in the sequence shown on the plans as reinforced soil placement proceeds. If blocks overhang the leveling pad transversely reconstruct the leveling pad. After setting the batter of the blocks, horizontal and vertical alignments shall be checked by the Contractor with surveying methods, using suitable measuring points. The maximum vertical joint spacing between blocks of the constructed wall shall be 3/16 inch. Placement of a block on top of a block not completely backfilled shall not be permitted.

Concrete block vertical and horizontal alignment tolerances shall not exceed ¾ inch per 10 feet. Do not construct any block more than ½ inch out of vertical or horizontal alignment from the adjacent blocks. The completed wall shall have (cap or top of wall) overall horizontal and vertical tolerance not to exceed ½ inch per 10 feet of the planned location. Blocks out of alignment shall not be pulled or pushed into proper place, as that may cause damage to the soil reinforcement. If misalignment occurs, the reinforced soil and the soil reinforcement shall be removed and the facing blocks reset to the proper alignment.

F. **Impervious Layer (Geomembrane):** The installation of the impervious layer (geomembrane) shall be in accordance with manufacturer's recommendations and as approved by the Engineer. Before geomembrane installation, it shall be assured that the area that is to be lined shall be smooth and free of sharp objects or debris of any kind. Atmospheric exposure of the geomembrane to the elements following lay down shall be a maximum of fourteen (14) days. The Contractor shall install a geomembrane liner free of tears. Notify the project engineer of any holes placed in the geomembrane for the installation fence posts, etc. The geomembrane shall be placed below the pavement, above the first row of reinforcement and over the parapet moment slab (where present) and over specified areas as shown on the plans. The geomembrane shall be sloped to drain away from the blocks as shown on the plans. HDPE shall not be installed during periods of precipitation or in conditions of excessive moisture such as fog or dew in accordance with the geomembrane manufacturer's recommendations and as approved by the Engineer.

All seams of the HDPE geomembrane liner system shall be welded or bonded, as per the manufacturer's specifications, such that a water tight seal is formed to prevent leakage. Seams shall be oriented parallel to the line of maximum slope. Seams shall have a minimum finished overlap of 4 in. unless a greater overlap is specified by the geomembrane manufacturer. Field testing of seams, according to the manufacturer's specifications, shall be conducted to verify satisfactory seaming conditions. When backfilling, care shall be taken to prevent damage to the geomembrane. Any tears,

punctures or holes incurred during the installation process shall be assessed by the Engineer and the membrane shall either be repaired in accordance with recommendations of the membrane manufacturer or replaced at the Engineer's discretion at no additional cost.

Perforations through the liner shall be limited. Where penetrations are necessary, the Contractor shall provide details demonstrating the method(s) of sealing the penetration for approval by the Engineer.

G. **Soil Reinforcement Installation:** Soil reinforcement shall be placed in accordance with the shop drawings. Reinforcement shall generally be placed perpendicular to the back of wall unless shown otherwise on shop drawings. Pretension flexible reinforcement to remove any slack in the reinforcement. Bar mat soil reinforcement shall not be skewed. No alteration or cutting of reinforcement is permitted unless clearly detailed in the approved shop drawings. Connections must be made in accordance with the manufacturer's recommendations. Reinforcement placement elevations shall not vary more than 1 inch from a horizontal line through the block connection.

Any wall system material that becomes damaged or disturbed during the installation of the wall system shall be removed, replaced or corrected at the Contractor's expense, as directed by the Engineer. Walls may be rejected due to failure to meet any of the requirements of the above specifications that will require future maintenance or will impact aesthetics, function, performance or life of the wall.

H. **Barrier and Coping Construction**: This final construction sequence shall be undertaken after the final wall blocks have been placed, and the reinforced soil has been completed to its finished ground line. Sections of precast coping should be sealed with a one-component, high performance, gun grade, paintable, elastomeric polyurethane sealant meeting Federal Specification TT-S-00230C, Type II, Class A and ASTM Standard C-920, Type S, Grade NS, Class 25 or higher. The following are acceptable products: Sikaflex-15 LM, High-performance, low-modulus elastomeric sealant; Sonolastic NP 1, One-component, elastomeric, gun-grade polyurethane sealant; Vulkem 116, One-Part, High Performance Polyurethane Sealant; or an engineer approved equal.

I. **Method of Measurement**: PMBW's shall be measured by the square foot of face on a vertical plane between a line 2 feet below the finished ground line in front of the wall and the top of the coping as shown on the plans. The Department will not adjust pay quantities for variations in concrete leveling pad elevations required to accommodate actual block placement.

J. **Payment Method**: Payment for PMBW's constructed at the Contract price per square foot of completed wall surface will be compensation in full for all costs of design and construction including blocks, soil reinforcement, connection devices, joint materials, coping, leveling pad, technical representatives, and other items which do not have separate pay items but are necessary to complete the PMBW.

Excavation and reinforced soil shall be paid for as specified in 2451. Drainage shall be paid for as specified in 2502.

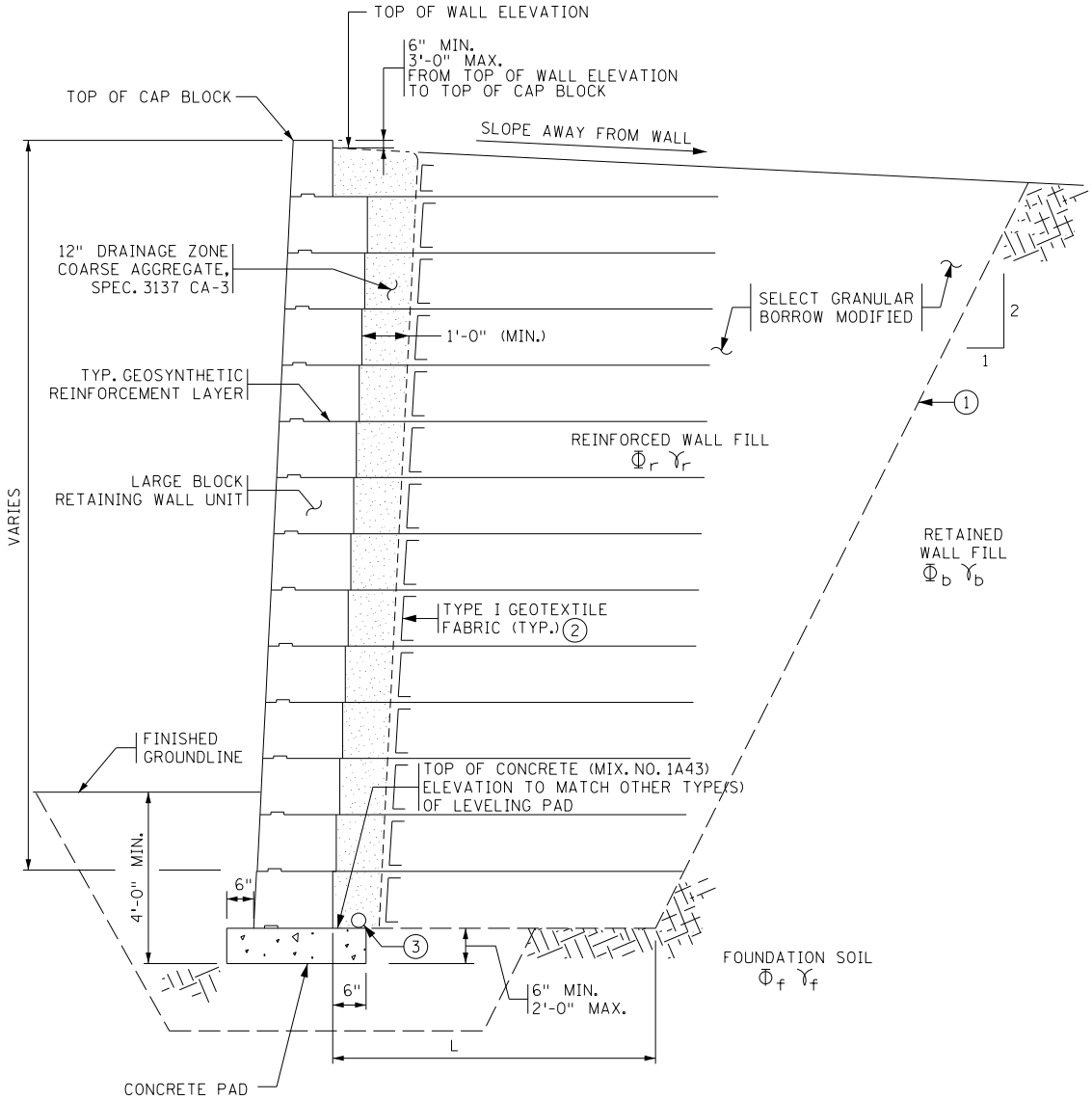

TYPICAL SECTION

NOT TO SCALE
LEVEL FILL

1. PAY LIMITS OF STRUCTURE EXCAVATION. ACTUAL EXCAVATION SLOPE IS DETERMINED BY OSHA REGULATIONS AND IN-SITU SOILS: EXCAVATION BEYOND "LIMITS OF STRUCTURE EXCAVATION" AT CONTRACTORS EXPENSE.

2. THE WRAP LENGTH FOR GEOTEXTILE FABRIC SHALL NOT BE MORE THAN 6".

3. 8" THERMOPLASTIC PERFORATED PIPE, SPEC. 3245. WRAP WITH TYPE 1 GEOTEXTILE, SPEC. 3733, INSTALLATION AS PER SPEC. 2502. CONNECT TO DRAINAGE SYSTEM OR OUTLET THROUGH WALL USING 6" T.P. NON-PERFORATED PIPE WITH RODENT SCREEN. ALL WORK INCIDENTAL

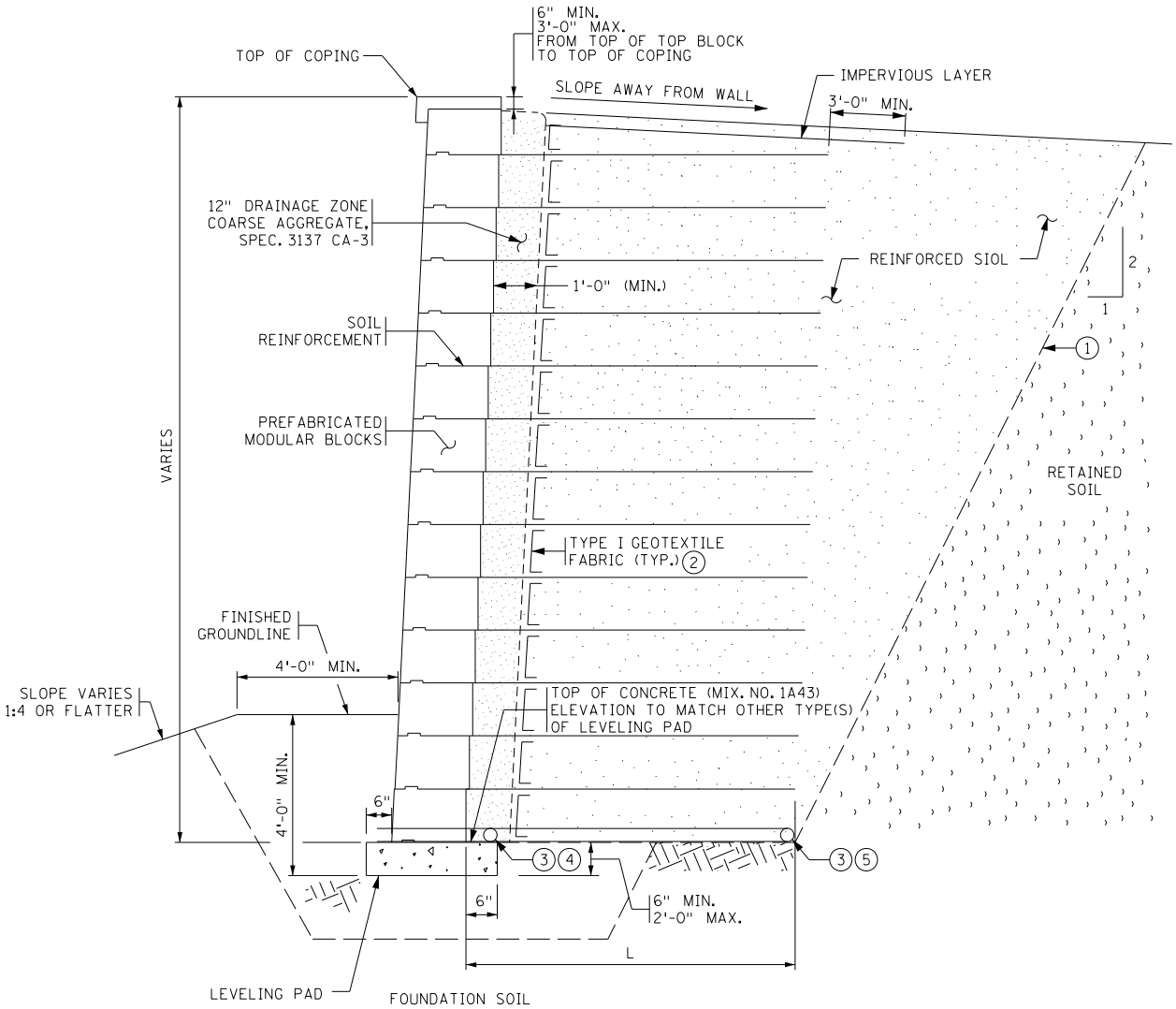

TYPICAL SECTION

NOT TO SCALE
LEVEL FILL

1. PAY LIMITS OF STRUCTURE EXCAVATION. ACTUAL EXCAVATION SLOPE IS DETERMINED BY OSHA REGULATIONS AND IN-SITU SOILS: EXCAVATION BEYOND "LIMITS OF STRUCTURE EXCAVATION" AT CONTRACTORS EXPENSE.
2. THE WRAP LENGTH FOR GEOTEXTILE FABRIC SHALL NOT BE MORE THAN 6".
3. 4" THERMOPLASTIC PERFORATED PIPE, SPEC. 3245. WRAP WITH TYPE 1 GEOTEXTILE, SPEC. 3733, INSTALLATION AS PER SPEC. 2502. CONNECT TO DRAINAGE SYSTEM OR OUTLET THROUGH WALL USING 6" T.P. NON-PERFORATED PIPE WITH RODENT SCREEN. ALL WORK INCIDENTAL
4. FRONT DRAINTILE.
5. BACK DRAINTILE.

Figure 2411-10: Typical PMBW Wall Cross Section

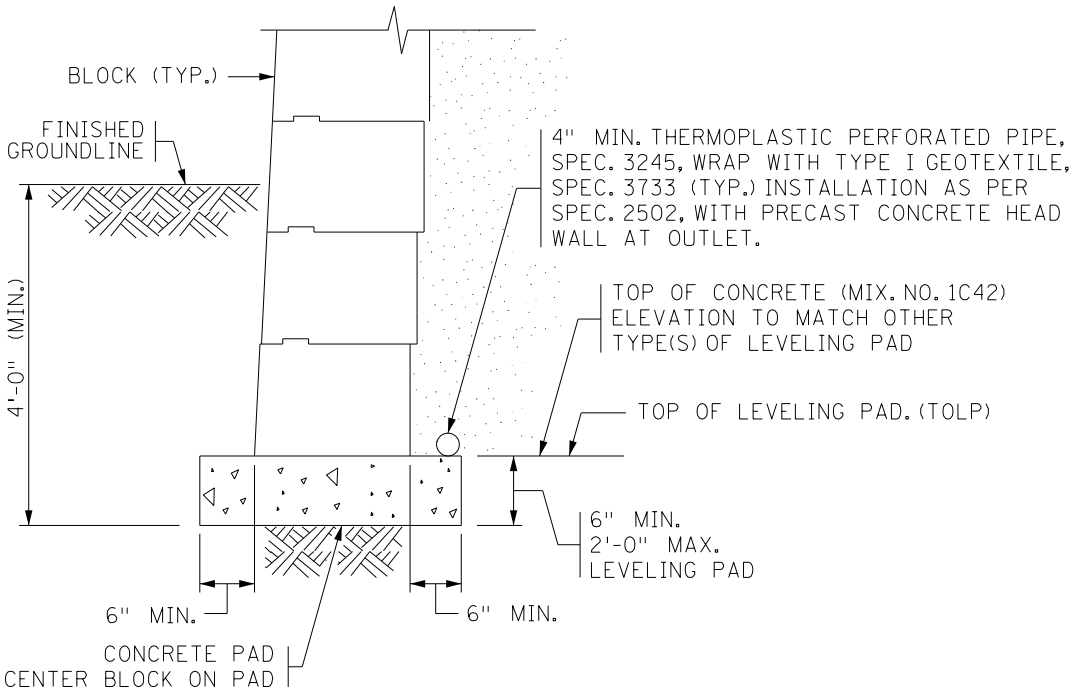

MBW Certification Letter

State Project No. (S.P. or S.A.P.)	
Wall No.	
Name of Accredited PMBW System	
Design Data	
The design life for the wall system other than soil reinforcement and connections.	75 years
The design life for geosynthetic reinforcement and connections used in the wall system, including long term creep.	100 years
Angle of Internal Friction - Reinforced Soil	34 Degrees
Applied Bearing Pressure at base of reinforced soil mass	
Factored Bearing Resistance at base of reinforced soil mass (located in Geotechnical or foundation report)	
Length of reinforcement to satisfy global stability (located in Geotechnical or foundation report)	
Compound stability check satisfied (if required by these special provisions)	

We hereby certify that the design calculations for the internal stability of the mechanically stabilized earth retaining structure and the detail drawings included in this construction submission are in complete conformance with the AASHTO LRFD Bridge Design Specifications, 5th edition and the project special provisions. We further certify that the design data provided above and data assumed for the design calculation submitted herein is accurate for the above referenced wall.

I hereby certify that this plan was prepared by me or under my direct supervision and that I am a duly licensed professional engineer under the laws of the State of Minnesota.	I hereby certify that this plan was prepared by me or under my direct supervision and that I am a duly licensed professional engineer under the laws of the State of Minnesota.
Signature:	Signature:
Date:	Date:

(Provide a PMBW Certification Letter for each wall in the project plans)

S-85 (2411) ARCHITECTURAL SURFACE FINISH (SINGLE COLOR)

This work consists of applying an architectural surface finish to all exposed concrete surfaces of the precast concrete coping for the MSE retaining wall system. The work shall be performed in accordance with the applicable provisions of Mn/DOT 2401, the Plans, and the following:

S-85.1 ARCHITECTURAL SURFACE (SINGLE COLOR)

Architectural Surface Finish (Single Color) shall be applied to the precast concrete coping for the MSE retaining wall system so designated in the Plans.

Architectural Surface Finish (Single Color) shall be a single color stain. The color shall match Mn/DOT Standard Gray Modified, adjusted by field testing as required to match to the color of the Special Surface Finish.

S-85.2 SURFACE COLOR

The surface coloring for the Architectural Surface Finish described above shall be performed using approved stains or paint systems applied in a manner consistent with the aesthetic design requirements of the Project.

For Architectural Surface Finish (Single Color), the color shall be provided by a two-coat stain application. The application of the base coat shall follow ordinary concrete finish operations and be by air or airless sprayer. Allow to thoroughly dry before applying

topcoat. The topcoat shall be applied in a uniform manner, moving in one direction, 5.5 to 6.5 mils wet film thickness equivalent to 1.5 to 2.0 mils dry film thickness. Use sufficient material to provide color uniformity, but avoid buildups and runs.

Cork joints shown in the Plans shall be finished to visually continue the pattern across the joint uninterrupted. A sample of the colored cork for approval shall be included in the concrete test panel described in SB-6.4 Architectural Concrete Texture (Random Batten), SB 6.5 Architectural Surface Finish (Single Color), and SB 6.6 Finish of Concrete Surfaces in Division SB which is attached to this Proposal.

S-85.3 STAIN MATERIALS

Stain shall be a 100 percent acrylic, water-repellant, semi-opaque, tinted emulsion sealer designed for concrete and masonry surfaces. Acceptable products shall allow moisture and vapor transmission, be formulated for exterior application with resistance to freeze/thaw, moisture, alkali, acid and mildew, mold or fungus, discoloration or degradation and meet the following requirements:

(A) Physical or performance properties:

Volume Solids	29-31 percent (Calculated Lab Value)
Weight Solids	44-46 percent (Calculated Lab Value)
Viscosity	65-85 KU (Calculated Lab Value)
Accelerated Weathering	1,000 Hours Minimum (ASTM G-26)

(B) Color pigments for tinted products shall be derived from synthetic mineral oxides.

(C) Subject to compliance with requirements, provide colored concrete finishing products from one of the following manufacturers:

The Sherwin-Williams Company
Tamms Industries
Chem-Rex
Other approved sources

To the greatest practical extent, all concrete finishing products shall be obtained from a single source.

All materials shall be furnished, prepared, applied, cured and stored according to the product manufacturer's directions and as specified herein. Special attention shall be given to the recommended temperature range for application.

S-85.4 SUBMITTALS BY CONTRACTOR

Within sixty (60) calendar days of execution and approval of the Contract, the Contractor shall submit the following to the Engineer for approval:

(A) Product data including manufacturer’s technical information, label analysis, and application instructions for each material proposed for use.

(B) Laboratory test reports showing that materials proposed for use meet physical or performance property requirements.

(C) 1 foot by 1 foot square samples of the Color System on the textured surface pattern. Final color selections will be based upon comparison to the Federal Standard 595B Color Chip in the color specified above.

S-85.5 SURFACE PREPARATION

Following removal of forms, all exposed textured concrete surfaces shall receive an ordinary surface finish in accordance with Mn/DOT 2401.3F2a prior to the surface preparation described below. Minor defects shall be finished to blend with the balance of the textured surfaces. Visible vertical or horizontal seams or conspicuous form marks shall be repaired to the satisfaction of the Engineer and at the Contractor's expense.

All formed concrete surfaces to receive Architectural Surface Finish (Single Color) shall be water-blasted to break the surface film and to remove all laitance detrimental to the color system performance. Sandblasting will not be allowed for cleaning concrete surfaces, as it will reduce the architectural surface treatment texture. Pressure washing with water at a pressure of **3000 pounds per square inch** at a rate of **3 to 4 gallons per minute** using a fan nozzle held perpendicular to the surface at a distance of **one to two feet** shall be used.

S-85.6 MEASUREMENT

Measurement for the Architectural Surface Finish (Single Color) applied to the exposed surface of all retaining walls will be by area based on the Plan dimensions of the finished colored plane surface area in square feet. For Color, see section SB-6.4 Architectural Concrete Texture (Random Batten), SB 6.5 Architectural Surface Finish (Single Color), and SB 6.6 Finish of Concrete Surfaces in Division SB which is attached to this Proposal. ***The color shall match Federal Standard 595C, Color No. 30372 (Dark Tan), adjusted by field testing as required to match to the color of the Special Surface Finish.***

S-85.7 PAYMENT

Payment will be made under Item 2411.618 (Architectural Surface Finish (Single Color)) at the Contract bid price per square foot, which shall be compensation in full for all costs incidental thereto.

S-86 (2411) ARCHITECTURAL CONCRETE TEXTURE (RANDOM BATTEN)

This work consists of constructing a textured architectural surface on all concrete retaining walls in accordance with the provisions of Mn/DOT 2411, the Plan details, and the following:

S-86.1 Texture shall be smooth formed concrete using rustication strips to create alternating vertical panels in the dimensions shown on the Plan.

S-86.2 Panels shall terminate in a cap feature which shall overhang the front face of the retaining wall.

S-86.3 Measurement will be made by area in square feet of the textured treatment completed as specified. No increase in area will be allowed for measuring the edges of relief-textured surfaces. Payment will be made under Item 2411.618 (Architectural Concrete Texture (Random Batten)) at the Contract bid price per square foot, which shall be compensation in full for all costs incidental thereto.

S-86.4 SPECIAL SURFACE FINISH

This work consists of applying a special surface finish to exposed concrete retaining wall surfaces in accordance with the provisions of Mn/DOT 2411, the Plan details, and the following:

(A) Special Surface Finish

The provisions of Mn/DOT 2401.3F2c shall apply except as modified herein:

A special surface finish will be required on the exposed concrete surfaces of all retaining walls. The objective is to obtain a surface that is reasonably smooth and uniform in texture and appearance and provide protection to the concrete surfaces from salt and other corrosive materials.

The concrete to which the special surface finish is to be applied must be a minimum of 28 days old. All surfaces that are to receive a special surface finish shall be thoroughly flushed with clean water not more than 24 hours before commencing with the finishing.

Both the initial and final coat for the special surface finish shall match Mn/DOT Gray Modified on file in the Concrete Engineering Unit of Mn/DOT's Office of Materials and Road Research (651/779-5572). Paint shall be free of toxic metals and shall not contain toxic pigments.

Provide a test area, 10 feet by 10 feet, for final color selections. The final color selection shall be approved by the Engineer.

(B) Basis of Payment

The surface finish and painting described above shall be considered an incidental expense to the respective concrete mixes for this construction and no additional compensation will be made for this work.

S-87 (2422) WOOD NOISE BARRIER

This work shall consist of furnishing all materials for and constructing wood noise barrier walls complete with appurtenant concrete posts, all in accordance with the Plan details, the applicable Mn/DOT Standard Specifications, and the following:

S-87.1 GENERAL

All thickness and width dimensions of solid sawn wood for timber facing material indicated in the Plans for wood wall construction shall be construed to be nominal dimensions unless otherwise indicated in the Plans or these Special Provisions.

S-87.2 MATERIALS

(A) Concrete Posts

As detailed in the Plan.

(B) Mn/DOT 3426 (Structural Timber) and 3457 (Lumber); Planking and Battens

1) Except as otherwise permitted elsewhere herein, dimensional timber for planks and battens shall be any species of southern pine conforming to the

requirements of Mn/DOT 3426 and/or 3457, free of natural and manufacturing defects that would impair the strength or prevent use of the piece in its full size for purposes of strength and utility intended, such as checks, decay, loose knots, holes, edge wane and warp.

2) Intermixing of wood species will not be permitted within any continuous section of wall.

3) Planks, which are constructed above ground shall be No. 1 Structural Grade and Better, dressed on two sides (S2S) or better, tongue and grooved worked. Planks, which are constructed partially above ground, such as those placed opposite the earth fill side of barriers, also shall meet these requirements. Planks, which are constructed below ground, such as those placed on the earth fill side (supporting) of barriers, and nailers shall be No. 2 Structural Grade and Better standard rough sawn. Battens and cap boards shall be No. 1 Structural Grade and Better, dressed on one side and two edges (S1S2E) or better.

4) Except as otherwise permitted elsewhere herein, all timber shall be treated with a Disodium Octaborate Tetrahydrate (DOT) and an exterior polymer based system that complies with ESR-1081(ICC Evaluation Service Report) as described hereinafter in this specification.

5) Moisture content shall meet the requirements of **Section S-87.9 (MOISTURE CONTENT**) of these Special Provisions.

(C) Structural Steel Tubing

Structural steel shall conform to the requirements of Mn/DOT 3306.

Threaded rods, bolts, nuts and washers shall be galvanized in accordance with Mn/DOT 3392 or be electroplated in accordance with ASTM B 633, Type III, SC 4.

(D) Hardware

All hardware for noise wall shall meet the following requirements:

1) All battens shall be secured to planks using a No. 8, or larger, - exterior grade stainless steel bugle head screw and install with a drive system that does not strip or cause damage to the head of the screw and will penetrate completely through the batten board and through ¾ of the thickness of the facing board in all applications. Stainless steel screws that meet the dimensional and drive system requirements are allowed without the performance of ASTM B 117.

2) The requirements as shown on Noise Wall Detail Sheets in the Plans shall be used as a reference except for the fastener pattern as detailed in **Sections: S-87.2D3 and S-87.2D4 (MATERIALS; Hardware)** below. All planking shall be secured to 3” X 10” plank nailer using a No. 8 or No 10 exterior grade stainless steel bugle head screw and install with a drive system that does not strip or cause damage to the head of the screw and will penetrate completely through the plank board to the depth specified in Figure A or Figure B below.

3) The **fastener pattern** used for **attaching planks to the plank nailer components** shall at a minimum meet the following requirements:

a. Four (4) screws per board connection, as shown in **Figure A** for 3” long screws; or

b. Three (3) screws per board connection, as shown in **Figure B** for 3 ½” long screws.

The fasteners shall be placed a minimum of 1” (one inch) and a maximum of 2” (two inches) from the edges of the plank nailer.

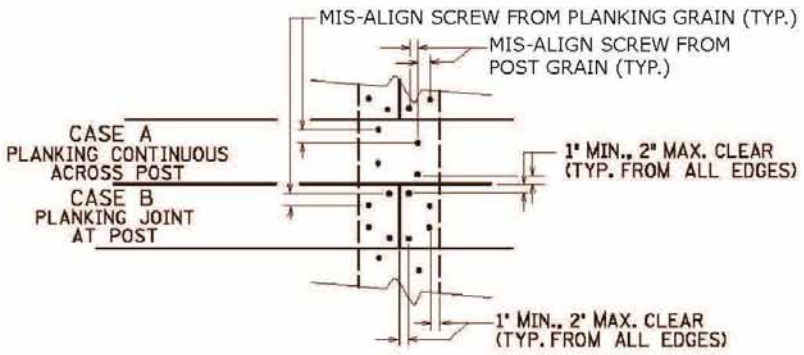

FIGURE A: SCREW PATTERN FOR 3″ SCREWS

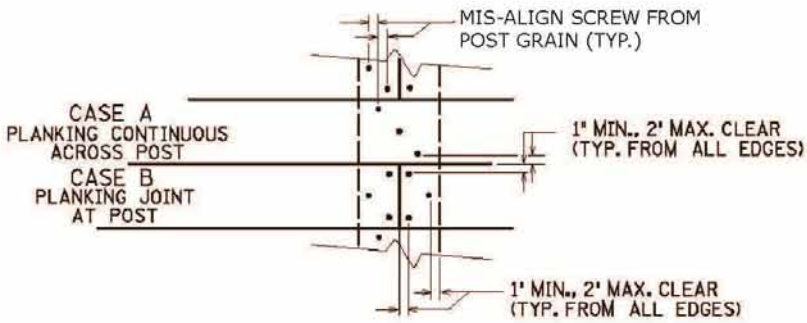

FIGURE B: SCREW PATTERN FOR 3-1/2″ SCREWS

4) The **fastener pattern** used for screwing **battens, cap boards and other architectural features to planks** shall utilize the following method:

a. Two fasteners shall be applied through the batten or other feature into each plank in a staggered pattern as shown on the Noise Wall Detail Sheet, Front Elevation View.

The fasteners shall be placed a minimum of 1" (one inch) and a maximum of 2" (two inches) from the edges of the batten board.

5) All hardware for wood noise barrier walls shall meet the requirements of Mn/DOT 3391 (Fasteners) , Mn/DOT 3392 (Galvanized Hardware) and Salt Spray Corrosion test must exceed 1,000 hour salt spray under ASTM B117 test method unless explicitly allowed by these Special Provisions.

(E) Stain and Paint

Exposed concrete and wood surfaces shall be stained and finished on all exposed surfaces in accordance with the requirements described hereinafter in this specification. Steel surfaces shall be painted and finished on all exposed surfaces in accordance with the requirements described hereinafter in this specification.

(F) Caulk

Caulk shall be a neutral-cure, one-component, high performance, medium modulus silicone joint sealant conforming to ASTM C920-86, Type S, Grade NS designed for general purpose caulking and glazing applications. Provide in a clear color. Apply after staining.

S-87.3 DEFINITIONS

(A) **BORATE Treated Wood** – Non-arsenic, non-heavy metal, and non-chromium pressure treated wood produced in accordance with applicable procedures and specifications, and the appropriate International Code Council Evaluation Service (ICC-ES) Standards and/or applicable American Wood Preservers' Association (AWPA) Standards for exterior usage [UC3A (Use Category 3A for exterior construction, above ground, coated & rapid water runoff) and UC3B (Use Category 3B for exterior construction, above ground, uncoated and poor water runoff) approval]. The Disodium Octaborate Tetrahydrate ($Na_2B_8O_{13}$•$4H_2O$) solution is an inorganic borate. The exterior usage is permitted through the use of an additional polymer treatment that inhibits the leaching of the borate from the wood.

(B) **Specialty Subcontractor** – Party responsible for BORATE handling, transporting, storing, installing, protecting, sampling, and patching (damaged BORATE). This may be the Contractor if Contractor is able to demonstrate to the Engineer its expertise in this area.

(C) **Manufacturer** – The ICC Accredited party or parties (as listed in ESR-1081) responsible for producing the BORATE treated wood and/or the preservative.

(D) **Retention** – amount of preservative level present in the BORATE wood measured in kg/m^3 [**lbs/ft^3**].

(E) **Water resistant** – Quality of the wood to repel moisture, providing long-term protection against decay, rot, and weathering.

(F) **Supplier** – If no Manufacturer (as defined above) exists for the Project, then the Supplier shall be defined as the facility responsible for furnishing the ICC Accredited borate-treated wood planks to the Specialty Subcontractor (as defined above).

S-87.4 REQUIREMENTS

(A) Materials Ordering

BORATE treated wood materials shall not be ordered until the Engineer has approved the proposed materials. If the Contractor orders materials without the Engineer's written approval, the Contractor assumes all liability.

(B) Preparation

Dewater the site, if noted in the Plan, such that the ground water is a minimum of 305 millimeters **[1 foot]** below the bottom of the excavation at all locations (See Special Provisions). Do not turn off the dewatering system until select granular borrow has been placed to the specified ground line, and approval has been obtained from the Engineer.

(C) Excavation

Excavate and fill to lines and grades as shown in the Plans. Fill placed below the noise wall shall be placed in maximum 203 millimeters **[8 inches]** loose lifts and compacted to Mn/DOT standard dynamic cone penetrometer (DCP) Standards. Measure moisture and density of compacted fill at the rate of one test per 382 cubic meters **[500 cubic yards]** of fill or a minimum of one (1) test per day.

(D) Branding

Each BORATE treated wood timber shall be individually permanently branded on the face of each timber, not the edges or ends with the following two (2) separate brands:

BRAND #1
1) Name of wood treating company;
2) Treatment plant city and state;
3) "Borate";
4) Preservative retention level;
5) "Approved for exterior use".

BRAND #2
1) Name of wood treating company;
2) ICC Accredited Facility;
3) ESR-1081 *.

* = ICC Evaluation Service Report 1081

(E) BORATE preservative

A borate with a binding system used to minimize leaching of the borate. The preservative shall provide protection to the wood against decay, rot, and insect attack, and act as a fungicide.

1) The preservative shall be applied at a rate by the manufacturer which will ensure that the measured retention level at the construction jobsite will be a minimum of 0.50 pounds per cubic foot for all applications where the timber will be installed, and as noted in 2) below;

2) Only Disodium Octaborate Tetrahydrate products approved for exposed conditions shall be allowed.

3) The polymer shall be applied at a rate of thirty (30) gallons per one-thousand (1000) board feet as stated in the quality manual as approved by the ICC in accordance with ESR-1081. Verification of this rate of usage shall be monitored by an independent third-party inspection agency and the resulting report will be presented to Mn/DOT upon request.

S-87.5 SUBMITTALS AND CERTIFICATION

All Borate Treated Wood must be sampled, tested and inspected by the Manufacturer and/or Supplier and approved by the Department prior to being incorporated permanently in the work. Unless otherwise specified, no direct compensation will be made for the costs of sampling and testing, it being understood that the costs are included in the Contract bid prices for treated wood products.

This inspection shall be performed in accordance with the following:

(A) A Letter of Compliance from the Manufacturer and/or Supplier certifying that the material furnished meets the Specification requirements and identifying the Specification number or reference and the Project number to which the material is shipped shall be furnished to the Engineer. The report also shall include the sampling procedures and results of all quality control tests, including a description of test methods used.

(B) A Letter of Compliance shall include Treatment and Inventory Audit Reports in accordance with the Quality Control Manual, Wood Treatment Products, Inc. **(See Section S-87.6).** This letter shall certify that all aspects of the Wood Treatment Products Quality Assurance Manual have been followed including both the retention of the borate in the wood and the appropriate amount of polymer as recorded by the treater upon treatment.

(C) The Department reserves the right to request additional testing and/or verification by the Manufacturer and/or Supplier at the Contractor's expense.

The Contractor is advised that he/she needs to allow enough lead time so that a Letter of Compliance can be prepared and furnished to the Engineer so as to not to interfere with the construction schedule for the completion of the wood noise barrier walls.

S-87.6 ACCEPTABLE PRESERVATIVE SOURCES

Disodium Octaborate Tetrahydrate ($Na_2B_8O_{13}$•$4H_2O$) is an inorganic borate and is manufactured by **Envirotech Ventures International, Inc.**, P.O. Box 712, Sandpoint, Idaho 83864, among others. It is distributed as **Envirosafe Plus ™ Wood Preservative** available through Wood Treatment Products, Inc., P.O. Box 950445, Lake Mary, FL 32795-0445, and its authorized treaters, **or approved equal.** The Engineer may accept, at his or her discretion, borate preservative-treated wood from a single approved source.

S-87.7 WARRANTY

The Contractor shall warrant the installation of the BORATE treated wood against defects for a period of one hundred twenty (120) days from the date of the acceptance

(See Section S-87.13) by the Engineer. (Note: This warranty is separate from any warranty (ties) that the manufacturer may provide to the Contractor on the treatment chemicals and/or the treated noise wall timbers supplied). The Contractor, or its designated representative, shall repair any defects due to improper installation that occur during the warranty period at no cost to the Department. The Contractor shall furnish the Engineer with a written warranty.

S-87.8 HANDLING AND STORAGE

BORATE Treated Wood materials shall be delivered in wrapped bundles and stored above ground, protected from weather and moisture until use. **The Contractor is reminded that due diligence and care must be exercised when moving or handling any posts or wood material from their storage area(s) on the Project. Should any damage occur to any posts or wood material being installed on the Project by the result of mishandling, the Engineer may refuse to accept the placement of any such damaged material under Mn/DOT 1607 and at the approval of the Engineer. Such damaged and unaccepted material shall be replaced by the Contractor at his cost.**

S-87.9 MOISTURE CONTENT

The Contractor is responsible for the following:

(A) Samples shall be tested for moisture content at the rate of one (1) sample per 186 square meters [2000 square feet] of installed wood material. Testing and test equipment shall meet the requirements of ASTM D4444-92 (Reapproved 2003) [Standard Test Methods for Use and Calibration of Hand-Held Moisture Meters], in particular Field Calibration (sections 5.2, 6.2, and 6.3) and Sampling Point (location) (section 6.6.1).

(B) The specified sampling rate may be increased prior to installation at the discretion of the Engineer (i.e., to test samples after a precipitation event).

(C) At the time of installation, the Contractor shall test and ensure the moisture content in the planking wood and battens shall not exceed thirteen (13) percent maximum moisture content per volume tested. Wood planking and battens which do not meet these requirements will be rejected. However, the rejected portion will be allowed to sun dry or be mechanically dried to meet moisture content requirements and then be placed with the approval of the Engineer in the noise wall installation. BORATE Treated Wood materials which fail to meet moisture content requirements shall be rejected by the Engineer and removed from the Project at no cost to Mn/DOT.

S-87.10 INSTALLER AND MATERIALS STANDARDS

(A) Submittals and testing qualifications of the installer of the BORATE Treated Wood shall comply with **Section S-87.4 (REQUIREMENTS)**, and **Section S-87.9 (MOISTURE CONTENT)** of these Special Provisions. These instructions must be provided to the Engineer, and approved by the Engineer prior to the Contractor ordering materials.

(B) The Contractor shall dispose of BORATE treated wood scraps and cut-offs in a non-hazardous municipal solid waste landfill in accordance with Mn/DOT 2104 and local regulations. BORATE treated wood scraps shall not be burned.

S-87.11 CONSTRUCTION REQUIREMENTS

(A) Construction of wood noise barrier walls together with appurtenant concrete posts shall be accomplished in accordance with the Plan details, the applicable Mn/DOT Standard Specifications, these Special Provisions, or as otherwise approved by the Engineer.

BORATE Treated Wood materials that must meet definite Specification requirements shall not be incorporated in the work until all preliminary inspections and tests necessary for moisture retention and preservative levels have been completed and the material is found to comply with requirements.

Structural Concrete shall be of Mix 1A43 placed as directed by the Plans, Specifications, these Special Provisions, and the Engineer.

(B) Concrete posts and vertical wood components, such as battens, shall be plumb after installation. Horizontal wood components, such as planks and cap boards, shall be level after installation.

(C) Excavated material for noise wall construction shall not be used for backfilling the post holes and shall be disposed of in accordance with Mn/DOT specifications.

(D) Fastening shall be accomplished in a manner that will avoid splitting boards. When fill is retained by the wall, 6-mil polyethylene sheeting shall be placed between planks and earth. However, the placement of the sheeting shall be done in a manner which does NOT allow the infiltration or retention of water next to the planking (i.e., the sheeting shall not be so tightly installed around the planking that a watertight area is formed next to the planking which could retain water).

(E) Joints shall be constructed in a manner that will completely arrest the passage of light. No daylight shall be visible through the joints 120 days after completion of the wall; this shall be construed to be part of the Warranty as detailed in **Section S-87.7** of these Special Provisions. The Contractor is advised to take whatever measures necessary to avoid excessive shrinkage or shifting which would cause the passage of light. Where passage of light does occur, the Contractor shall take corrective action, by applying caulking to the satisfaction of the Engineer, at his/her own expense.

(F) Planking shall be installed “groove side down” in all installations. When battens are to be joined in the construction of the wall, they shall have a 45 degree down miter joint instead of the inplace 90 degree joint (to minimize water retention issues).

(G) Storage of materials within the Right of Way will be permitted only as approved by the Engineer.

(H) Debris shall be disposed of outside the Right of Way.

S-87.12 STAINING, PAINTING AND FINISHING REQUIREMENTS

This work shall consist of furnishing all materials and labor for staining exposed concrete and wood surfaces and painting of metal surfaces of Wood Noise Barrier in accordance with the applicable Mn/DOT Standard Specifications, the Plan details, and the following:

(A) Scope

1) Section includes thin-film wall coatings for concrete and wood substrates.

2) Related sections include wall materials and construction as found elsewhere herein these Special Provisions.

(B) Submittals

1) Product Data: Submit manufacturer's complete technical data sheets for stains and paints for each substrate requiring finishing, including:

a. Product profile
b. Surface preparation
c. Technical data
d. Application

2) Samples for Initial Color Selection: Submit manufacturer's color charts showing full range of colors available. When specified, match Federal color standards.

3) Qualification Data: For product manufacturers and installers indicated in Quality Assurance section, indicating capabilities and list of projects completed. Provide complete contact information for each reference.

4) Product Estimates: Submit calculations for the amount of stain material needed for a two-coat application for the Project using manufacturer's average recommended coverage rate for each substrate type.

(C) Quality Assurance

1) Manufacturer Qualifications: Manufacturer with 10-years' experience in stain system design, product manufacture and technical consultation services.

2) Installer Qualifications: Installer with 5-years' experience in stain application and maintenance on projects of similar scope and quality.

3) Products for Concrete and Wood Surfaces: Provide a high quality water-based acrylic polymer stain designed to provide long-term protection in exterior exposures on concrete and wood surfaces, while adding design dimension in architectural applications. For a list of approved stains see the following web site:
http://www.mrr.dot.state.mn.us/materials/apprprod.asp

a. General Requirements:

1. 100% straight acrylic polymer
2. Free of toxic metals
3. 100% organic pigments
4. Meets latest Federal VOC regulations
5. Color as specified

b. Specific Requirements:

1. Solids by volume: 30% minimum
2. Solids by weight: 44% minimum
3. Viscosity: 65 KU minimum

c. Obtain each specified material from the same source and maintain high degree of consistency in workmanship throughout the Project.

d. Deliver, store and handle specified products according to manufacturer's instructions and application techniques.

4) Notification: Notify manufacturer's authorized representative at least 1-week before starting the work of the Project as directed by the Engineer.

5) Test Panels: At location selected by the Engineer, finish a 10-foot by 10-foot area of each substrate requiring stain application to obtain approval for the color, finish and coverage rates before proceeding with the Project.

a. Provide products, processes and techniques intended for use on permanent work. Adjust color shade of stain product as directed by the Engineer to achieve desired aesthetic appearance.

b. Retain and protect accepted test sample as the visual standard for the work of this section and quality standard for permanent work.

c. A one (1) pint sample of each lot number of stain to be used on the Project shall be submitted to Mn/DOT's Office of Materials for testing to verify: i) Percent Solids ; ii) Infrared Scan on vehicle; and iii) Viscosity.

1. Stain failing these tests shall be rejected, and shall not be used on the Project.

6) Colors: Provide colors for stain specified in accordance with the following selection guide:

a. Concrete Surfaces – Includes concrete posts. Match Federal Standard 595C, Color No. 30372 (Dark Tan).
b. Wood Surfaces – Includes wood planking, nailers, battens and cap boards. Match Federal Standard 595C, Color No. 20140 (Medium Brown).
c. Metal Surfaces – Not Used
d. Architectural Features – Not Used.
e. Final color selections will be determined by the Engineer using test panels provided by the Contractor. The Contractor is advised that more than one color may be field tested and that the approved color may be a custom color.

(D) Construction Requirements

1) Verify that surfaces to be finished are sound, dry and free of dust, dirt, oils, efflorescence, biological and chemical residues, paint, stain, curing compounds and other contaminants which may affect performance of the stains(s) specified.

2) In addition to the moisture content test(s) performed under **Section S-87.9 (MOISTURE CONTENT)** of these Special Provisions, the Contractor shall test the moisture content of all wood surfaces before applying stain specified. This testing shall be performed at the rate of one (1) sample per 186 square meters **[2000 square feet]** of installed wood material. Except as otherwise approved by the Engineer, surfaces having a moisture content greater than 13% shall not be stained.

3) Apply stain specified according to manufacturer's instructions and application techniques to achieve average coverage rate shown on manufacturer's technical data sheets. This data must specifically provide surface preparation and application instructions for preservative treated timber and lumber products. **Apply two coats minimum** using airless spray equipment with appropriate tip/atomizing pressure for equipment, applicator technique and weather conditions to produce a wet application that provides color uniformity, but avoids buildups, lap marks and runs. **Finished areas lacking a uniform appearance shall be repaired to the satisfaction of the Engineer without additional cost or expense to the State.**

4) Protect and shield all surfaces that are not intended to be treated, including trees, shrubs and other plants. When multiple colors are specified, protect previously finished surfaces to avoid overspray.

(E) Payment

Staining, painting and finishing of concrete, wood and metal surfaces are considered an incidental expense to the respective items of Wood Noise Barrier construction, and no additional compensation will be made for this work.

S-87.13 "BORATE" TREATED WOOD ACCEPTANCE

The Contractor shall retain ownership and responsibility of the BORATE treated wood until the Engineer accepts it.

(A) The Engineer will accept the BORATE installation after:

1) All required documentation from the Contractor has been received and accepted.

2) Test reports verifying material properties have been received and accepted by the Engineer.

3) Construction of the Borate-treated noise wall is complete, including any repairs needed due to material defects or construction requirements.

S-87.14 MEASUREMENT AND PAYMENT

(A) Concrete posts of each size will be measured separately by the length of the posts furnished and installed complete in place as specified. A decorative cap as detailed on Sheet No. 365 of the Plan shall be constructed on all concrete posts, regardless of post size. No additional post length has been computed to compensate for the cap. All work to furnish and construct the cap, as detailed, shall be considered incidental to the cost of the concrete posts as specified, which shall include all costs incidental thereto.

(B) ***Wood noise wall construction will be measured by the square foot of BORATE treated timber and lumber furnished and installed complete in place as specified, including quality assurance sampling and testing, architectural treatments (battens and cap feature), fire hose access holes and staining. No increase in area will be allowed for measuring the opposite side of the wall or the architectural treatments required on this surface unless specified on drawings.***

(C) Payment will be made according to the following schedule:

NOTE: Only those pay items which are applicable to this Project shall apply

Item	**Description**	**Units**.
2422.603	Concrete Posts 12" x 12"	Linear Foot
2422.603	Concrete Posts 12" x 18"	Linear Foot
2422.618	Wood Noise Attenuator Wall	Square Foot

Payment shall be considered compensation in full for all other costs incidental thereto.

S-88 (2461) STRUCTURAL CONCRETE

The provisions of MnDOT 2461 are modified in accordance with the following:

S-88.1 MNDOT 2461.3B SHALL BE DELETED AND REPLACED WITH THE FOLLOWING:

B Classification of Concrete

The Department will classify concrete by type, grade, consistency, and aggregate size. Refer to the mix number and Table 2461-2 to determine the mix requirements for each item of work.

Table 2461-2
Mix Number Identification

First Digit	Second Digit	Third Digit	Fourth Digit	Additional Digits
Type	Grade	Slump range	Coarse aggregate gradation range	Class A coarse aggregate when required, modified mix designation, or both

Refer to individual Contract items in the Standard Specification for Mix Numbers. Deviations from the specified Mix Numbers require coordination with the Concrete Engineer.

If the Contract does not show a concrete mix number, provide Type 3, Grade Y concrete with a slump and aggregate gradation determined by the Engineer.

The Department will designate grout by type and grade followed by the word "GROUT." Do not provide grout containing coarse aggregate. If the Plans do not show a type or grade for grout, provide 3A GROUT.

B1 Type Designation

Provide Type 1 or Type 3 concrete in accordance with Table 2461-3:

Table 2461-3
Concrete Type Designation

Concrete Type	Target Air Content*, %	Maximum Water/Cement Ratio‖
1	2.0	≤ 0.53 for 1A43 ≤ 0.68 for 1C62 ≤ 0.64 for 1C Grout
3	6.5 †	≤ 0.45†#

* For concrete mix design purposes only

‖ The water/cement ratio is defined as the ratio of the total water weight to the total cementitious weight.

† Unless otherwise required by 2301 or elsewhere in the Contract.

#The maximum water/cement ratio for machine placed concrete is 0.42.

B2 Grade Designation

The Department will designate concrete grade using a letter to represent the anticipated compressive strength and the minimum cementitious content in accordance with 2461.3C, "Cementitious Content," and Table 2461-4:

Table 2461-4
Concrete Grade Designation

Concrete Grade	Type 1 Anticipated Compressive Strength, *psi [MPa]* *	Type 3 Anticipated Compressive Strength, *psi [MPa]* *
U	6,300 [43]	5,600 [39]
V	6,000 [41]	5,300 [37]
W	5,700 [39]	5,000 [34]
X	5,400 [37]	4,700 [32]
Y	5,000 [34]	4,300 [30]
A	4,500 [31]	3,900 [27]
B	4,100 [28]	3,400 [23]
C	3,200 [22]	2,700 [19]

* Anticipated minimum strength produced in accordance with the Department specifications and cured for 28 days under laboratory conditions.

The Concrete Engineer, in coordination with the Engineer, may increase the cement content for concrete with test cylinder results less than the anticipated compressive strength in accordance with Table 2461-4, "Concrete Grade Designation." The Contractor may request an increase in the cement content as approved by the Engineer, in conjunction with the Concrete Engineer.

B3 Slump Designation

Refer to the slump designation for the upper limit of the slump range without a water reducer in accordance with Table 2461-5:

Table 2461-5 Slump Designation	
Slump Designation	**Slump Range without Water Reducer, *in [mm]***
1	½ – 1 [12 – 25]
2	1 – 2 [25 – 50]
3	1 – 3 [25 – 75]
4	2 – 4 [50 – 100]
5	2 – 5 [50 – 125]
6	3 – 6 [75 – 150]

B4 Coarse Aggregate (CA) Designation

Refer to the coarse aggregate designation for the range of optional coarse aggregates gradations allowed in the mix in accordance with Table 3137-4, “Coarse Aggregate Designation for Concrete,” and Table 2461-6:

Table 2461-6 Coarse Aggregate Designation for Concrete	
Range	**Optional Coarse Aggregate Designation**
0	CA-00 only
1	CA-15 to CA-50, inclusive
2	CA-15 to CA-60, inclusive
3	CA-35 to CA-60, inclusive
4	CA-35 to CA-60, inclusive
5	CA-45 to CA-60, inclusive
6	CA-50 to CA-70, inclusive
7	CA-70 only
8	CA-80 only

B5 Additional Designations

For mix designs that require a specified class of coarse aggregate as defined in 3137.2.B, an additional letter will follow the fourth digit of the Mix Number such as "A" (Class A Aggregate Requirement).

The Engineer may identify special concrete mix designations with additional letters following the last digit such as "HE" (High Early), "WC" (Water-Cement Ratio), "HPC" (High Performance Concrete), "MS" (Microsilica), or others.

S-88.2 MNDOT 2461.3E SHALL BE DELETED AND REPLACED WITH THE FOLLOWING:

E Concrete Admixtures 3113

The Contractor may use the following approved admixtures at their discretion as listed on the Approved Products list:

(1) Type A, "Water Reducing and Mid Range Water Reducing Admixtures"
(2) Type B, "Retarding/Hydration Stabilizer Admixtures"
(3) Type D, "Water Reducing and Retarding Admixtures"
(4) Type S, "Viscosity Modifying Admixtures"

Use of any other admixtures in the concrete requires approval of the Concrete Engineer unless otherwise required by or allowed in the Contract.

When incorporating admixtures into the concrete:

(1) Use admixture dosage rates recommended by the manufacturer.
(2) Add all admixtures at the plant.
(3) Provide admixture additions at the job site that are the same products as originally incorporated into the mix.
(4) Use calcium chloride in concrete as approved by the Engineer, in conjunction with the Concrete Engineer. Do not use calcium chloride in units containing prestressing steel or in bridge superstructure concrete.

E1 Use of Additional Admixtures

On a case by case basis, the Engineer, in conjunction with the Concrete Engineer, will consider the use of the following admixtures, added either at the plant or at the job site, as listed on the Approved Products list:

(1) Type C, "Accelerating Admixtures"
(2) Type E, "Water Reducing and Accelerating Admixtures"
(3) Type F, "Water Reducing, High Range Admixtures"
(4) Type G, "Water Reducing, High Range and Retarding Admixtures"

E1a Delivery Time Beyond 90 Minutes

If the haul time does not facilitate mixing and placing the concrete within 90 minutes, perform the following procedures for pre-qualifying a concrete mix to extend the delivery time to 120 minutes. Extending the delivery time beyond 120 minutes will require additional testing at 30 minute intervals up to the maximum desired delivery time as directed by the Concrete Engineer.

(1) Provide a contractor mix design in accordance with 2461.3G2 for each combination of materials.

(2) Specification 2461.3D is modified to allow up to 25% fly ash replacement for cement. All other requirements of 2461 apply.

(3) Laboratory trial batching on the proposed mix includes the following testing requirements:

- (a) Perform all laboratory trial batching at an AMRL accredited laboratory.
- (b) Perform all plastic concrete testing after adding all admixtures to the concrete mixture.
- (c) Perform slump, air content, unit weight and temperature testing immediately after batching and at 90 and 120 minutes.
- (d) Fabricate concrete cylinders for compressive strength at 90 and 120 minutes (sets of 3) and cylinders for hardened air content testing at 90 and 120 minutes (sets of 5).
- (e) Test the cylinders for compressive strength at 28 days.
- (f) Determine the hardened air content (ASTM C457) at a minimum of 7 days. The Contractor is required to test at 2 samples representing 90 minutes and 2 samples representing 120 minutes and provide MnDOT with the other 6 samples for testing at their discretion. Retain any hardened concrete test specimens for a minimum of 90 days for MnDOT to examine at their discretion.
- (g) Ensure the admixture manufacturer's technical representative is present during the trial batching.
- (h) Contact the MnDOT Concrete Engineering Unit a minimum of 2 days prior to mixing. This same 2 day notification is required prior to any physical testing on hardened concrete samples.
- (i) Once accepted by the Concrete Engineer, the laboratory trial batching is considered acceptable for use for 5 years, unless it is determined the material sources have changed significantly since the initial laboratory testing and acceptance. In all cases, the Engineer will require field trial batching on a project specific basis.

(4) Field trial batching on the proposed mix for each specific project shall include batching in the presence of the Engineer and the following:

- (a) Provide a QC Plan for extending the delivery time beyond 90 minutes.
- (b) Mix and transport the concrete using the same materials as were utilized in the laboratory trial batching.
- (c) Batch a minimum 5 cu. yd (4 cu. m) of concrete utilizing the same methods intended for use when supplying concrete placed into the permanent work.
- (d) Maintain the ready mix truck in transit; by either driving around the yard or on the roadway; and maintain the drum speed at 5 to 7 revolutions per minute for the entire 120 minutes.
- (e) Perform all plastic concrete testing after adding admixtures to the concrete mixture.
- (f) Perform slump, air content, unit weight and temperature testing at 90 and 120 minutes.

(g) Fabricate concrete cylinders for compressive strength at 90 and 120 minutes (sets of 3) and cylinders for hardened air content testing at 90 and 120 minutes (sets of 2).

(h) Test the cylinders for compressive strength at a minimum of 7 days.

(i) Determine the hardened air content (ASTM C457) at a minimum of 7 days. The Contractor is required to test 1 sample representing 90 minutes and 1 sample representing 120 minutes and provide MnDOT with the other 2 samples for testing at their discretion. Retain any hardened concrete test specimens for a minimum of 90 days for MnDOT to examine at their discretion.

(j) Incorporate the trial batch concrete into other work with the approval of the Engineer.

(k) The Contractor must demonstrate to the Engineer the ability to properly mix, control and place the concrete.

(5) The Concrete Engineer, in coordination with the Engineer, will review the trial batch results and all related concrete testing for compliance with the QC Plan and the Contract. Final approval of the mixture is based on satisfactory field placement and performance.

S-88.3 MNDOT 2461.3F SHALL BE DELETED.

S-88.4 MNDOT 2461.3G, 2461.3H, AND 2461.3J SHALL BE DELETED AND REPLACED WITH THE FOLLOWING:

G Job Mix Proportions

G1 Department Designed

The Department will provide the estimated composition of concrete mixes unless otherwise required by the Contract.

The Department may adjust the mix composition of the concrete without adjusting the Contract unit price for any items of work.

G1a Concrete Yield

The Department defines concrete yield as the ratio of the volume of mixed concrete, less accountable waste, to the planned volume of the work constructed. The Department will not assume responsibility for the yield from a given volume of mixed concrete.

G1b High-Early Strength Concrete

When the Engineer requires high-early strength concrete, the concrete is designed in accordance with the following:

- Increasing the cement content of the concrete up to 30 percent and/or using an approved accelerator as allowed by the Engineer, in conjunction with the Concrete Engineer
- Using 100 percent portland cement unless allowed by the Contract or the Engineer
- A maximum cement content for a cubic yard [cubic meter] of concrete not to exceed 900 lb [**535 kg**].

- A w/c ratio not to exceed 0.38 for Type 3 Concrete unless specified elsewhere in the Contract.

G2 Contractor Designed

Design the concrete mix based on an absolute volume of 27.00 cu. ft ± 0.10 cu. ft [**1.000 cu. m ± 0.003 cu. m**] for the following:

(1) Concrete paving mixes in accordance with 2301,
(2) Concrete mixes with an anticipated or required 28-day compressive strengths of at least 5,000 psi [**34 Mpa**],
(3) Precast concrete in accordance with 2405, 2412, 3236, 3238, 3621, 3622, 3630, 3661, and 3667
(4) Colored concrete
(5) Stamped concrete
(6) Cellular Concrete Grout – Controlled Low Strength Material (CLSM)
(7) Extended Delivery Times Beyond 90 minutes
(8) Concrete as otherwise required by the Contract.

Submit the concrete mixes utilizing the MnDOT Contractor Mix Design Submittal Package available on the Department's website at least 21 calendar days before initial placement of the concrete mix. The Concrete Engineer will provide specific gravity and absorption data for mix design calculations.

The Concrete Engineer will review the mix design submittal and approve the materials and mix design for compliance with the Contract.

The Contractor assumes full responsibility for the mix design and performance of the concrete.

The Engineer determines final acceptance of concrete for payment based on satisfactory field placement and performance.

S-88.5 <u>MNDOT 2461.4A2(C) SHALL BE DELETED AND REPLACED WITH THE FOLLOWING:</u>

Do not place concrete when the air temperature at the point of placement is below 36 °F [2 °C] or is expected to fall below 36 °F [2 °C] within the following 24 h period unless approved cold-weather provisions are in-place. Discontinue concrete placement if the air temperature falls below 36 °F [2 °C].

S-88.6 <u>MNDOT 2461.4A4A SHALL BE DELETED AND REPLACED WITH THE FOLLOWING:</u>

A4a Consistency

The Engineer will test the concrete for consistency using the slump test during the progress of the work. The Department may reject concrete batches with consistencies outside of the slump range in accordance with Table 2461-10. If any test shows the slump in excess of the upper limit of the slump range, the Engineer will reject the concrete represented by that test unless the Contractor makes adjustments to the concrete before use.

Adjust the slump within the allowable range to optimize both placement and finishing.

If not using a Department approved Type A water reducer at the manufacturer's recommended dosage rates listed on the Approved Products list, meet the slump values for the slump range without water reducer in accordance with Table 2461-10.

If using a Department approved Type A water reducer at the manufacturer's recommended dosage rates listed on the Approved Products list, meet the slump values for the slump range with water reducer in accordance with Table 2461-10.

Table 2461-10
Slump Range Designation

Slump Designation	Slump Range without Water Reducer, *in [mm]*	Slump Range with Water Reducer, *in [mm]*
1	½ – 1 [**12 – 25**]	½ – 1 [**12 – 25**]
2	1 – 2 [**25 – 50**]	1 – 3 [**25 – 75**]
3	1 – 3 [**25 – 75**]	1 – 4 [**25 – 100**]
4	2 – 4 [**50 – 100**]	2 – 5 [**50 – 125**]
5	2 – 5 [**50 – 125**]	2 – 6 [**50 – 150**]
6	3 – 6 [**75 – 150**]	3 – 7 [**75 – 175**]

Contact the Engineer if encountering unusual placement conditions that render the specified slump range unsuitable. The Department will provide mix composition modifications to provide the desired change in consistency while maintaining the other specified properties of the concrete mix. Do not add water solely to temporarily facilitate the placement of concrete.

A4a(1) Concrete Placed by the Slip-Form Method

Place concrete that does not slough and is adequately consolidated at a slump value that optimizes placement for the designated mixture.

A4a(2) Non-Conforming Material

Only place concrete meeting the slump requirements in the work. If the Contractor places concrete not meeting the slump requirements into the work, the Engineer will not accept nonconforming concrete at the Contract unit price.

For concrete not meeting the required slump, the Engineer will make determinations regarding the disposition, payment, or removal. The Department will adjust the Contract unit price for the Contract pay item of the concrete in accordance with Table 2461-11A, 2461-11B, 2461-11C and 2461-11D. When there is not a separate Structural Concrete bid price for an item of work or the concrete is a minor component of the unit bid price, the Department will reduce payment based on a concrete price of $100.00 per cu. yd

[$130.00 per cu. m] or Contractor-provided invoice amount for the concrete in question, whichever is less.

Table 2461-11A **General Concrete***	
Outside of Slump Range	**Adjusted Contract Unit Price**
Below slump range*	The Department will pay 95 percent of the relevant Contract unit price for materials placed as approved by the Engineer.
≤ 1½ in [**40 mm**] above slump range	The Department will pay 75 percent of the relevant Contract unit price for materials placed as approved by the Engineer.
1¾ in [**45 mm**] – 2¼ in [**55 mm**] above slump range	The Department will pay 50 percent of the relevant Contract unit price for materials placed as approved by the Engineer.
> 2¼ in [**55 mm**] above slump range	The Department will pay 25 percent of the relevant Contract unit price for materials placed as approved by the Engineer
* If the Contractor places piling or footing concrete below the slump range, the Department will deduct $100 per cu. yd [**$130 per cu. m**] or a Contractor-provided invoice amount to the relevant Contract unit price of the concrete represented by the slump test, whichever is less. The Department will not reduce Contract unit price for low slump concrete placed with the slip-form method as approved by the Engineer.	

Table 2461-11B **Bridge Deck Concrete**	
Outside of Slump Range	**Adjusted Contract Unit Price**
Below slump range	The Department will pay 95 percent of the relevant Contract unit price for materials placed as approved by the Engineer.
≤ 1½ in [**40 mm**] above slump range	The Department will pay 75 percent of the relevant Contract unit price for materials placed as approved by the Engineer.
> 1½ in [**40 mm**] above slump range	The Department will pay 25 percent of the relevant Contract unit price for materials placed as approved by the Engineer.

Table 2461-11C **Low Slump Bridge Deck Concrete** **From ½ in [12 mm] to 1 in [25 mm]**	
Outside of Slump Range	**Adjusted Contract Unit Price**
Below slump range	No deduction for materials placed as approved by the Engineer
≤ ½ in [**12 mm**] above slump range	The Department will pay 50 percent of the relevant Contract unit price for materials placed as approved by the Engineer.
> ½ in [**12 mm**] – ¾ in [**20 mm**] above slump range	The Department will not pay for concrete placed but will allow the concrete to remain in place as approved by the Engineer.
> ¾ in [**20 mm**] above slump range	The Department will not pay for concrete. Provide additional testing as directed by the Engineer to determine if the concrete can remain or place or is subject to removal and replacement.

Table 2461-11D **Low Slump Concrete — Patching** **From ½ in [12 mm] to 1 in [25 mm]**	
Outside of Slump Range	**Adjusted Contract Unit Price**
Below slump range	No deduction for materials placed as approved by the Engineer
≤ ½ in [**12 mm**] above slump range	The Department will pay 75 percent of the relevant Contract unit price for materials placed as approved by the Engineer.
≥ ¾ in [**20 mm**] above slump range	The Department will pay 25 percent of the relevant Contract unit price for materials placed as approved by the Engineer.

S-88.7 <u>MNDOT 2461.4A4B SHALL BE DELETED AND REPLACED WITH THE FOLLOWING:</u>

A4b Air Content

Maintain the air content of Type 3 general concrete at the specified target of 6.5.percent ±1.5 percent of the measured volume of the plastic concrete in accordance 1503.

Make any adjustments immediately to maintain the desired air content.

Measure the air content at the point of placement but before consolidation.

A4b(1) Non-Conforming Material

Only place Type 3 concrete meeting the air content requirements in the work. If the Contractor places Type 3 concrete not meeting the air content requirements into the work, the Engineer will not accept nonconforming concrete at the Contract unit price.

For concrete not meeting the required air content, the Engineer will make determinations regarding the disposition, payment, or removal. The Department will adjust the Contract unit price for the Contract pay item of the concrete in accordance with Table 2461-17. When there is not a separate Structural Concrete bid price for an item of work or the concrete is a minor component of the unit bid price, the Department will reduce payment based on a concrete price of $100.00 per cu. yd [**$130.00 per cu. m**] or the Contractor-provided invoice amount for the concrete in question, whichever is less.

General Concrete (Target Air Content 6.5%)	
Air Content, %	**Adjusted Contract Unit Price**
> 10.0	The Department will pay 75 percent of the relevant Contract unit price for the concrete represented for material placed as approved by the Engineer.
>8.0 – 10.0	The Department will pay 95 percent of the relevant Contract unit price for the concrete represented for material placed as approved by the Engineer.
5.0 – 8.0	The Department will pay 100 percent of the relevant Contract unit price for the concrete represented, for material placed as approved by the Engineer.
>4.0 – <5.0	The Department will pay 75 percent of the relevant Contract unit price for the concrete represented for material placed as approved by the Engineer.
>3.5 – 4.0	The Department will pay 25 percent of the relevant Contract unit price for the concrete represented and placed as approved by the Engineer. If the Engineer, in conjunction with the Concrete Engineer, determines the surface is exposed to freeze-thaw cycling, coat the concrete with an approved epoxy penetrant sealer from the MnDOT Approved Products list.
≤ 3.5	Remove and replace concrete in accordance with 1503, “Conformity with Plans and Specifications” and 1512, “Unacceptable and Unauthorized Work” as directed by the Engineer. If the Engineer, in conjunction with the Concrete Engineer, determines the concrete can remain place, the Engineer will not pay for the concrete and if the Engineer determines the surface is exposed to salt-brine freeze-thaw cycling, coat with an approved epoxy penetrant sealer from the MnDOT Approved Products list.

S-88.8 MNDOT 2461.4A5 SHALL BE DELETED AND REPLACED WITH THE FOLLOWING:

A5 Test Methods and Specimens

The Engineer will furnish molds for the test specimens in accordance with the following based on the maximum aggregate size:

(1) 4 in × 8 in [**100 mm × 200 mm**] cylinder molds,
(2) 6 in × 12 in [**150 in × 300 mm**] cylinder molds for maximum aggregate sizes greater than 1¼ in [**31.5 mm**],
(3) 6 in × 6 in × 20 in [**150 in × 150 in × 500 mm**] beam molds, use other beam mold sizes as approved by the Engineer.

Provide curing tanks of adequate size and number for curing all of the concrete test specimens in accordance with 2031.3.C. Supply the curing tanks with heaters to maintain a water temperature of 73° F ± 3° F [**23° C ± 2° C**].

If Contractor testing is required in the Contract, perform the following:

(1) Provide a MnDOT Certified Concrete Field 1 Technician to perform all Contractor Testing.
(2) Determine the required testing rates in accordance with the Schedule of Materials Control,
(3) Take samples after the first ¼ cu yd [cu. m] and before discharging the last ¼ cu. yd [cu. m] of the batch,
(4) Perform concrete sampling and testing meeting the requirements of the MnDOT Concrete Manual,
(5) Measure slump and air content, and make strength specimens when placing the concrete,
(6) Record field measurements, including strength specimen identifications on MnDOT Form 2448, Weekly Concrete Report, to provide to the Concrete Engineer.

The Engineer will transport the cylinders to the Agency laboratory for testing.

A5a Standard Strength Cylinders

The Department will perform the following for standard strength cylinders:

(1) Cast cylinders for testing at 28 days,
(2) Mark cylinders for identification of the represented unit or section of concrete,
(3) Cure the cylinders meeting the requirements of the MnDOT Concrete Manual, and
(4) Submit cylinders and a completed cylinder identification card to the Agency laboratory.

The Producer of precast units is responsible for casting standard strength cylinders.

A5b Control Strength Cylinders

The Engineer will use control cylinders to determine when the sequence of construction operations is dependent upon the rate of concrete strength development. The Engineer will cast enough control cylinders to determine when the concrete attains the required strength for all desired control limitations.

The Department will perform the following for control strength cylinders:

(1) Cast up to three (3) control cylinders. Any additional control cylinders are the responsibility of the Contractor,
(2) Cure the cylinders in the same location and under the same conditions as the concrete structure or unit involved meeting the requirements of the Concrete Manual,
(3) Mark control cylinders for identification of the represented unit or section of concrete, and
(4) Submit cylinders and a completed cylinder identification card to the Agency laboratory.

If the Agency is unavailable to test the control cylinders, the Contractor shall submit the control cylinders to an independent testing facility for testing or the Contractor may perform the testing on the control cylinders on a portable mechanical or hydraulic testing machine checked and calibrated with a standard proving ring as approved by the Engineer and in the presence of the Engineer.

The Producer of precast units is responsible for casting control strength cylinders.

A5c Strength Specimens for Concrete Paving

Use flexural beams to determine strength or provide cylinders as allowed by the Contract or approved by the Engineer.

Cast standard beams or cylinders for testing at 28 days.

Cast a sufficient number of control beams or cylinders to determine when the concrete attains the required strength for all desired control limitations.

Cure the standard beams or cylinders meeting the requirements of the MnDOT Concrete Manual.

Cure the control beams or cylinders in the same location and under the same conditions as the concrete structure or unit involved meeting the requirements of the MnDOT Concrete Manual.

The Engineer will test the flexural beams and record the results on MnDOT Form 2162, "*Concrete Test Beam Data*."

If using cylinders, the Engineer will submit cylinders and a completed identification card to the Agency laboratory.

S-88.9 <u>MNDOT 2461.4D1 SHALL BE DELETED AND REPLACED WITH THE FOLLOWING:</u>

D Certified Ready-Mix Concrete

D1 Definition

The Department defines ready-mix concrete as one of the following:

(1) Central-mixed concrete proportioned and mixed in a stationary plant and hauled to the point of placement in revolving drum agitator trucks or a truck mixer, or
(2) Truck-mixed concrete proportioned in a stationary plant and fully mixed in truck mixers.

Commonly uses certified ready-mix terms are defined in the following:

Certified Ready-Mix Terminology	
Term	Definition
Mix design water	The maximum allowable water content for 1 cu. yd [**1 cu. m**] of concrete in accordance with MnDOT Form TP 02406, *Estimated Composition of Concrete Mixes*.
Total moisture factor	Factor used to determine total amount of water carried by a given wet aggregate.
Absorption factor	Factor used to determine the water contained within the pores of the aggregate and is held within the particles by capillary force.
Free moisture	The water that is carried on the surface of the aggregate that becomes part of the total water.
Batch water	Water actually batched into the truck by the batcher.
Total water	Batch water added to free moisture. Total water may also include the water used in diluting admixture solutions.
Temper water	Water added in mixer to adjust slump.
Total actual water	The water in the concrete mixture at the time of placement from any source other than the amount absorbed by the aggregate. It includes all batch water placed in the mixer, free moisture on the aggregate and any water added to the ready mix truck prior to placement.
Ready-Mix Producer or "Producer"	Party that is producing the concrete for the Contract. It is understood that the Ready-Mix Producer is the agent of the Contractor.

S-88.10 MNDOT 2461.4D2 SHALL BE DELETED AND REPLACED WITH THE FOLLOWING:

D2 General Requirements

Supply all ready-mix concrete from MnDOT Certified Concrete Plants in accordance with 2461.4D7.

The Engineer will reject ready-mix concrete delivered to the work site not meeting the specified requirements for delivery time, consistency, quality, air content, or other properties as unacceptable work in accordance with 1512, "Unacceptable and Unauthorized Work."

Provide batches for a delivered load of concrete in sizes of at least 1 cu. yd [**1 cu. m**].

Handle washout water in accordance with 1717.

S-88.11 MNDOT 2461.4D3 SHALL BE DELETED AND REPLACED WITH THE FOLLOWING:

D2 Notice of Inspection

Notify the Engineer at least 24 h before beginning concrete production to allow the Engineer time to provide inspection forces needed for the work and to approve preparations for concrete placement. If the Contractor fails to provide 24 h notice, the Engineer may delay concrete placement in accordance with 1503, "Conformity with Plans and Specifications" and 1512, "Unacceptable and Unauthorized Work."

If the producer needs to change plants during placement, notify the Engineer and obtain approval before changing the plant.

S-88.12 THE FIRST TWO PARAGRAPHS OF MNDOT 2461.4D5C SHALL BE DELETED AND REPLACED WITH THE FOLLOWING:

D5c Mixing In Truck Mixer

Charge the materials into the truck mixer drum by introducing sufficient water before adding solid materials. Perform charging operations without losing materials.

Leave the truck mixer at the plant site for a minimum of 5 minutes or 50 revolutions during the mixing period. Transport the concrete at agitating speed to the point of placement.

S-88.13 MNDOT 2461.4D6 SHALL BE DELETED AND REPLACED WITH THE FOLLOWING:

If using a Department approved Type A, "Water reducing or Mid Range Water Reducing Admxiture" at the manufacturer's recommended dosage rates listed on the Approved Products list, meet the slump values for the slump range with water reducer in accordance with Table 2461-10.

D6 Delivery Requirements

Place concrete into the work in accordance with the following:

(1) Type 1 Concrete – within 90 minutes of batching, and
(2) Type 3 Concrete – within 90 minutes of batching when all admixtures are added at the plant at the manufacturer's recommended dosage rates listed on the Approved Products list. If the haul time does not facilitate mixing and placing the concrete within 90 minutes, test the concrete in accordance with 2461.3E1a.

In any case, do not add additional mixing water once the concrete is 60 minutes old.

Mix the load a minimum of 5 minutes or 50 revolutions at mixing speed after addition of any admixture.

The Contractor may transport Type 3 concrete in non-agitating equipment if the concrete is discharged within 45 minutes of batching.

Batch time starts when the batch plant or the transit mix truck adds the cement to the other batch materials.

D6a Field Adjustments

The Engineer will test the concrete for compliance with 2461.4A4a and 2461.4A4b according to the following:

(1) If the first test taken by the Engineer passes, the Engineer will resume verification testing according to the Schedule of Materials Control.
(2) If the first test taken by the Engineer fails, make adjustments and perform any quality control testing prior to the Engineer performing a final test. Acceptance or rejection of the truck is based on the Engineer's final test result.
(3) The Engineer will test up to 2 additional trucks according to 2461.4D6a(1) and 2461.4D6a(2).
(4) If the concrete is not within specification after the first 3 trucks, the Engineer will reduce their verification testing rate to once per truck for acceptance.
(5) Once the Engineer returns to normal verification testing according to the Schedule of Materials Control and a failing test occurs, the Engineer will repeat 2461.4D6a(2), 2461.4D6a(3) and 2461.4D6a(4).

S-88.14 MNDOT 2461.4D7 SHALL BE DELETED AND REPLACED WITH THE FOLLOWING:

D7 Certified Ready-Mix Plant Program

Provide ready-mix concrete produced by a certified ready-mix plant. Perform quality control of concrete production under a certification program for ready-mix concrete plants.

Complete all concrete plant documentation utilizing the Concrete Ready-mix Plant QC Workbook available from the MnDOT Concrete Engineering website. Electronically submit the QC Workbook to the Engineer by the Tuesday immediately following the previous week's production.

D7a Plant Certification

Before concrete production each season, ensure the producer performs the following:

(1) Performs an on-site inspection at the concrete plant with the Engineer who completes a MnDOT Form 2163, *Concrete Plant Contact Report*.
(2) Signs the report certifying compliance with the Certified Ready-Mix requirements and continual maintenance of the plant. The Engineer will also sign MnDOT Form 2163, *Concrete Plant Contact Report*.
(3) Provides a copy of the current MnDOT Concrete Manual and retain on-site.
(4) Equips the Certified Ready-Mix Plant with a working facsimile machine or an email address.
(5) Keeps plant reports, charts, and supporting documentation on file at the plant site for 5 calendar years.
(6) Provides electronic scales for weighing all materials.

D7b Sampling and Testing

Provide a MnDOT Certified Concrete Plant Level 2 Technician to oversee testing and plant operations and to remain on-site during concrete production or have cellular phone capability.

Provide facilities in accordance with 1604 for the use of the plant technician in performing tests.

Ensure the producer provides technicians with certification at least meeting MnDOT Concrete Plant Level 1 to perform all of the duties in accordance with the MnDOT Concrete Manual. The Engineer will provide technicians with certification at least meeting MnDOT Concrete Plant Level 1 to perform all of the duties in accordance with the MnDOT Concrete Manual.

Ensure the producer performs testing in accordance with the MnDOT Concrete Manual and determines testing rates meeting the requirements of the Schedule of Materials Control. The Engineer performs testing in accordance with the MnDOT Concrete Manual and determines testing rates meeting the requirements of the Schedule of Materials Control.

Take samples randomly using ASTM D 3665, Section 5.

Perform testing at the certified ready-mix plant site. Perform additional testing as directed by the Engineer. The Engineer may oversee the quality control sampling process.

Provide equipment and perform calibrations meeting the requirements of the following:

(1) AASHTO T 27, “Sieve Analysis of Fine and Coarse Aggregates,”
(2) AASHTO T 255, “Total Moisture Content of Aggregate by Drying,”
(3) AASHTO M 92, “Wire-cloth Sieves for Testing Purpose,” and
(4) AASHTO M 231, “Weighing Devices Used in the Testing of Materials.”

D7c Gradations and Aggregate Quality

Determine the gradation of the fine aggregates and the coarse aggregates as required by the Contract. Use mechanical shakers for sieve analysis of fine and coarse aggregates.

Identify quality control companion samples with the following information:

(1) Date,
(2) Test number,
(3) Time,
(4) Type of material,
(5) Plant, and
(6) Sampling location.

Document gradation results on MnDOT Form 2449, *Weekly Concrete Aggregate Report*.

Chart the results of all producer and Department gradation results of the coarse aggregate and the No. 8 [**2.36 mm**], No. 30 [**600 µm**], and No. 50 [**300 µm**] sieves of the fine aggregate.

The producer may request a reduction in testing rates as approved by the Engineer, in conjunction with the Concrete Engineer.

If the gradation tests on split samples from quality control or verification samples result in a variation between the producer and the Department greater than that set forth in the table below, the parties shall follow the procedures for test result dispute resolution available from the MnDOT Concrete Engineering website.

Allowable Variations on Percent Passing Sieves	
Sieve Size	**Allowed Percentage**
2 in [**50 mm**] – ⅜ in [**9.5 mm**]	± 6
No. 4 [**4.75 mm**] – No. 30 [**600 µm**]	± 4
No. 50 [**300 µm**]	± 3
No. 100 [**150 µm**]	± 2
No. 200 [**75 µm**]	± 0.6

D7c(1) Non-conforming Material

Only place concrete meeting the gradation requirements in the work. If the Contractor places concrete not meeting the gradation requirements into the work, the Engineer will not accept nonconforming concrete at the Contract unit price.

For concrete not meeting the required gradation, the Engineer will make determinations regarding the disposition, payment, or removal. The Department will adjust the Contract unit price for the Contract pay item of the concrete in accordance with Table 2461-9 and 2461-10. When there is not a separate Structural Concrete bid price for an item of work or the concrete is a minor component of the unit bid price, the Department will reduce payment based on a concrete price of $100.00 per cu. yd [**$130.00 per cu. m**] unless an invoice amount for the concrete in question is provided, whichever is greater.

Table 2461-7A **General Concrete for Individual Aggregate Fractions** **Fine and Coarse Aggregate Specification Sieves other than Fine Aggregate No. 200 [75 µm]**	
Outside of Specification, %	**Adjusted Contract Unit Price**
≤ 3	The Department will pay 98 percent of the relevant Contract unit price for concrete placed as approved by the Engineer.
4 to 6	The Department will pay 95 percent of the relevant Contract unit price for concrete placed as approved by the Engineer.

Table 2461-7A **General Concrete for Individual Aggregate Fractions** **Fine and Coarse Aggregate Specification Sieves other than Fine Aggregate No. 200 [75 µm]**	
Outside of Specification, %	**Adjusted Contract Unit Price**
7 to 10	The Department will pay 90 percent of the relevant Contract unit price for concrete placed as approved by the Engineer.
> 10	The Department will pay 75 percent of the relevant Contract unit price for concrete placed as approved by the Engineer.

Table 2461-7B **General Concrete for No. 200 [75 µm] Sieve of Fine Aggregate**	
Outside of Specification, %	**Adjusted Contract Unit Price**
≤ 0.3	The Department will pay 98 percent of the relevant Contract unit price for concrete placed as approved by the Engineer.
0.4 to 0.6	The Department will pay 95 percent of the relevant Contract unit price for concrete placed as approved by the Engineer.
0.7 to 1.0	The Department will pay 90 percent of the relevant Contract unit price for concrete placed as approved by the Engineer.
> 1.0	The Department will pay for 75 percent of the relevant Contract unit price for concrete placed as approved by the Engineer.

If a failure occurs on the fine aggregate No. 200 [**75 µm**] sieve and on other sieves concurrently, the Department will only reduce the price based on the larger percentage deduction.

The Engineer, in conjunction with the Concrete Engineer, will determine adjusted Contract unit prices for coarse aggregate quality failures in accordance with 1503.

D7d Moisture Content

Ensure the producer performs the following:

(1) Determine the moisture content using the oven dry method in all fractions of the aggregate.
(2) Document moisture tests on MnDOT Form 2152, *Concrete Batching Report*.
(3) Chart the moisture content of each aggregate.

In addition to the oven dry moisture test, the producer may obtain the moisture content in the fine aggregate using a moisture probe.

To obtain approval for the use of a moisture probe, calibrate the moisture probe before each construction season meeting the requirements of the MnDOT Concrete Manual. Verify and chart both the probe moisture content and the oven-dry verification moisture test each week.

D7e Plant Diaries

Provide daily plant diaries in accordance with the MnDOT Concrete Manual using an approved form from the Department's website.

D7f Batch Weight Verification

The Engineer will observe the batching process to verify weights shown on the Certificate of Compliance.

The Engineer will observe the actual water batched during each collection of verification gradations in accordance with the following:

(1) Watching the ready-mix truck reverse the drum after washing,

(2) Verifying use of the current moisture test,

(3) Verifying that any additional water added to adjust the slump is recorded, and

(4) Validating water weights on the load batched and comparing the total water with the design water

The Engineer will document the actual water batched on MnDOT Form 24143, *Weekly Certified Ready-Mix Plant Report* and submit a copy to the Engineer to provide to the Concrete Engineer.

The Engineer will provide plant diaries in accordance with the MnDOT Concrete Manual.

D7g Certificate of Compliance

Provide a computerized Certificate of Compliance with each truckload of ready-mixed concrete at the time of delivery. The Department defines computerized to mean a document that records mix design quantities from load cells and meters.

If the computer that generates the Certificate of Compliance malfunctions, the Engineer may allow the Contractor to finish any pours in progress if the producer issues a handwritten MnDOT Form 0042, *Certificate of Compliance* with each load. Do not allow the producer to begin new pours without a working computerized Certificate of Compliance.

Provide a computerized Certificate of Compliance from the producer for each item of information, including the following:

(1) Name of the ready-mix concrete plant,
(2) Name of the Contractor,
(3) Date,
(4) State Project Number (SP) or (SAP),
(5) Bridge Number (when applicable),
(6) Time concrete was batched,
(7) Truck number,
(8) Quantity of concrete in this load,
(9) Running total of each type of concrete, each day for each project,
(10) Type of concrete (MnDOT Mix Designation Number),
(11) Cementitious materials using MnDOT Standard Abbreviations,
(12) Admixtures using MnDOT Standard Abbreviations
(13) Aggregate sources using 5 digit State Pit Numbers, and
(14) Admixture quantity fl. oz. per 100 pounds of cementitious [**mL per kg**] or oz per cu. yd [**mL per cu. m**]
(15) Batch information for materials using MnDOT standardized labels to represent each column shown in Table 2461-7C. Present the information in the order listed across the page (a through k) or print the information using two lines provided that the materials are identified in each line of information.

Table 2461-7C **Standardized Certificate of Compliance Labels**			
Category		**Formula**	**Standard Label**
a)	Ingredients (aggregate, cementitious, water, admixtures)	—	Ingredient
b)	Product Source (MnDOT Standard Abbreviation)	—	Source
c)	Total Moisture Factor (in decimals to 3 places)	—	MCFac
d)	Absorption Factor (in decimals to 3 places)	—	AbsFac
e)	MnDOT mix design oven dry (OD) weights, *lb/cu. yd* ***[kg/cu. m]***	—	OD
f)	Absorbed moisture in the aggregates, *lb/cu. yd* ***[kg/cu. m]***	(e × d)	Abs
g)	Saturated surface dry (SSD) weights for aggregates, *lb/cu. yd* ***[kg/cu. m]***)	(e + f)	SSD
h)	Free moisture, *lb/cu. yd* ***[kg/cu. m]***	(c - d) × e	Free Mst
i)	Target weights for one cubic yard [cubic meter] of concrete, *lb/cu. yd* ***[kg/cu. m]***	(g + h)	CY Targ [**CM Targ**]
j)	Target batch weights, *lb* ***[kg]***	(cu. yd × i) [**cu. m x i**]	Target
k)	Actual batch weights, *lb* ***[kg]***	—	Actual
NOTE: Actual cubic yards [**cubic meters**] batched may vary due to differences in air content, weight tolerances, specific gravities of aggregates, and other variables.			

(16) Total Water (Batch Water + Free Moisture) in pounds [kilograms]

(17) Water available to add [(Mix Design Water) × (Target CY (CM)) – Total water] in gallons [**liters**]

(18) Space to note the water adjustment information, including:

(18.1) Water in gallons [**liters**] added to truck at plant filled in by producer, enter zero (0) if no water is added.

(18.2) Water in gallons [**liters**] added to truck at the jobsite filled in by producer or Engineer, enter zero (0) if no water is added.

(18.3) Total actual water in pounds [**kilogram**] (Total Water from Certificate of Compliance plus any additions).

(19) **T**he following information printed with enough room beside each item to allow the Engineer to record the test results:

(19.1) Air content,

(19.2) Air temperature,

(19.3) Concrete temperature,
(19.4) Slump,
(19.5) Cylinder number,
(19.6) Location or part of structure,
(19.7) Time discharged, and
(19.8) Signature of Inspector.

(20) Location for the signature of the MnDOT Certified Plant 1 Technician representing the Producer. The technician will review the first Certificate of Compliance for each mix type, each day, for accuracy and hand sign the Certificate of Compliance at a location designated for signature signifying agreement to the terms of this policy and to certify that the materials itemized in the shipment comply with the specifications and plans.

D7h Decertification

If the Contractor provides concrete from a plant that cannot produce concrete that fails to perform testing, report accurate results, or complete required documentation, the Engineer may reject the concrete as unacceptable in accordance with 1503, "Conformity with Plans and Specifications" and 1512, "Unacceptable and Unauthorized Work.".

The Concrete Engineer, with coordination from the Engineer, may decertify the plant and halt production of concrete if the producer performs the following:

(1) Procedural changes made after the completion of the Concrete Plant Contact Report and after starting the work that cause non-compliance with the program,
(2) Continually produces concrete in non-compliance with this section,
(3) Completely disregards the requirements of this section, and
(4) Submits fraudulent test reports

If decertifying the plant, the Concrete Engineer may perform the following:

(1) Revoke plant certification.
(2) Revoke technician certification for individuals involved,
(3) Revoke bidding privileges as determined by the Construction Engineer, and
(4) Criminal prosecution for fraud as determined by the Attorney General.

S-89 (2471) STRUCTURAL METALS

The provisions of Mn/DOT 2471 are modified with the following:

S-89.1 The Contractor is hereby referred to **Section SB-11 (2471) STRUCTURAL METALS** in Division SB which is attached to this Proposal. The provisions in SB-11 (2471) STRUCTURAL METALS shall be applicable to the entire Contract.

S-90 (2472) METAL REINFORCEMENT

The provisions of Mn/DOT 2472 are modified with the following:

S-90.1 Mn/DOT 2472.1 is hereby deleted and replaced with the following:

2472.1 DESCRIPTION

This work shall consist of the furnishing of metal reinforcement of the type, shape and size specified, and its satisfactory placement at the locations required by the Contract.

S-91 (2501) PIPE CULVERTS

This work shall consist of furnishing and installing pipe sewers and fittings in accordance with the Plans, the applicable Mn/DOT Standard Specifications, Section 12 of the AASHTO LRFD Bridge Design Specifications, the attached detail "PLASTIC PIPE INSTALLATION REQUIREMENTS", and the following:

S-91.1 Each shipment of pipe shall be accompanied by a Certification of Compliance, furnished by the pipe manufacturer, in accordance with Mn/DOT 1603. Damaged pipe shall not be used.

S-91.2 If the Contractor chooses to use CORRUGATED POLYETHYLENE (CP) pipe sewer the following shall apply:

This work shall consist of furnishing and installing dual-wall corrugated polyethylene pipe and fittings in accordance with the above and with AASHTO M294.

AASHTO Type 'S' corrugated polyethylene pipe and fittings shall be manufactured from high-density polyethylene (HDPE) virgin compounds. Clean reworked HDPE materials from the manufacturer's own production may be used by the manufacturer of HDPE pipe, provided that the pipe and fittings produced meet all the requirements of these Special Provisions, AASHTO M294 and Section 12 of the AASHTO LRFD Bridge Design Specifications.

S-91.3 COUPLINGS

If the Contractor chooses to use corrugated polyethylene (CP) or polyvinyl chloride (PVC) pipe the following shall apply:

Connections shall be made with bell and spigot joints. Bell and spigot joints shall utilize a gasket if necessary to make the joint soil-tight. At a minimum all joints will be soil-tight unless otherwise specified.

When a silt-tight joint is specified, it will require a bell and spigot joint utilizing an elastomeric rubber seal (gasket) meeting ASTM F477 able to pass a laboratory pressure test of at least 14 kPa **[2 psi]**.

When a water-tight joint is specified in the plans, it will be required that the joint meet the requirements of ASTM D3212 except as modified. The internal pressure test shall be performed at 68 kPa **[10 psi]** (minimum) with the pipe in straight alignment. The vacuum test is not required. The Engineer shall be provided a laboratory certification that the pipe coupler for each size of pipe meets or exceeds these requirements. The Engineer shall also be furnished shop drawings of each pipe coupler.

S-91.4 DEFLECTION TESTING

If the Contractor chooses to use corrugated polyethylene (CP) or polyvinyl chloride PVC) pipe the following shall apply:

The pipe shall be evaluated to determine whether the specific internal diameter of the barrel has been reduced more than 5%. Deflection testing shall be done not less than thirty days after installation.

Deflection testing for pipes with an inside diameter of 600 mm **[24"]** or less shall be performed by the Contractor using a nine-point mandrel approved by the Engineer. The diameter of the mandrel shall be 95% of the certified actual mean inner diameter of the pipe. The mandrel must be pulled through the pipe by non-mechanical means. Deflection testing of pipes with an inside diameter greater than 600 mm **[24"]** shall be inspected with a mandrel, or other method capable of making the deflection measurement that is approved by the Engineer. If direct measurements are allowed, locations will be selected randomly by the Engineer, but at a minimum, measurements will be taken every 3 m **[10 feet]** throughout the pipe length and at the pipe ends. In addition the pipe must be visually inspected and measurements taken at any location where anomalies or deflections are observed. Personnel making direct measurements must meet confined space entry requirements.

Pipe through which the mandrel does not pass or which direct measurement indicates there is more than 5% deflection will be considered unacceptable. New pipe or deformed pipe that is not damaged shall be re-laid. The re-laid pipe shall be retested for deflection after no less than five days.

S-91.5 If the Contractor chooses to use corrugated metal sewer the following shall apply:

Corrugated metal sewers and the connecting bands therefore shall be constructed of circular corrugated metal pipe conforming to the requirements of Mn/DOT 3226 and the following:

(A) In the event metal pipe other than lock seam or welded helically corrugated pipe is used, the circumferential seams shall be close riveted, and all seams shall be caulked (in accordance with the manufacturer's recommendation) with a permanent type waterproofing material approved by the Engineer. The Contractor shall obtain the Engineer's approval of the waterproofing material prior to placing the order therefore.

(B) The connecting bands shall consist of a rod and lug type coupler, installed with the same permanent type waterproofing material used to caulk the seams in the corrugated metal pipe as set forth above. Any equally effective connecting device approved by the Engineer may be employed.

(C) The Contractor is advised proper waterproof sealing of the sewer joints and seams is of absolute necessity; therefore the criteria for inspection and acceptance will be of the highest standards.

(D) All costs for material and labor necessary to provide the caulked seams and joints as specified shall be incidental work and no payment in addition to the Contract price for furnishing and installing the metal sewers will be made.

S-92 (2502) SUBSURFACE DRAINS, PERMEABLE AGGREGATE BASE TYPE

This work shall consist of constructing subsurface drains to collect and discharge water coming from a permeable aggregate base system. The drains shall be constructed in accordance with the applicable provisions of Mn/DOT 2502.

S-92.1 MATERIAL REQUIREMENTS

(A) Aggregate

The aggregate shall comply with the following requirements:

(1) General

Permeable aggregate for backfilling the drainage trenches shall be a naturally rounded sand and gravel.

(2) Gradation

Sieve Size	Percent Passing
19.0 mm [**3/4 inch**]	100
9.5 mm [**3/8 inch**]	50 - 95
4.75 mm [**No. 4**]	20 - 60
2.00 mm [**No. 10**]	0 - 15
425 μm [**No. 40**]	0 - 4
75 μm [**No. 200**]	0-2

(3) Crushing

Up to 15 percent crushed particles or crushed add-rock will be permitted. The use of recycled materials will not be permitted. Measurement will be by mass [**weight**] in the plus 4.75 mm [**No.4**] material.

(4) Quality

The material retained on the 4.75 mm [**No. 4**] sieve shall contain less than 5 percent by weight of shale or other soft rock types (by brass pencil test) and less than 55 percent by mass [**weight**] of carbonate rock (limestone or dolostone).

(B) Miscellaneous

Geotextile for trench lining shall meet Mn/DOT 3733, Type I. Perforated Corrugated Polyethylene Drainage Tubing (PE) shall meet Mn/DOT 3278.

S-92.2 CONSTRUCTION REQUIREMENTS

(A) Trenching

Drains shall be placed by machine trencher capable of cutting the trench and laying the pipe in a continuous operation. Plowing will not be permitted. The trenching equipment shall be so designed and operated that the excavated material does not fall back into the trench. Trench width shall be 180 mm [**7 inch**] minimum, 250 mm [**10 inch**] maximum. Bottom of the trench shall be shaped to cradle lower one-third of the pipe. Pipe grades shall follow pavement grades at the design depth shown in the Plan. The geotextile, pipe and permeable aggregate backfill may be placed simultaneously with the trenching or in a separate operation which will immediately follow. If the pipe and permeable aggregate are not placed simultaneously by the trenching machine, the Contractor shall insure that the pipe is properly aligned in the shaped cradle before placing the enclosing aggregate.

No shield will be required on the trenching head unless the material being trenched or the Contractor`s operations lead to sloughing or caving from either side of the trench, in which case the Engineer may require that a shield be used and the permeable aggregate placed in the shield.

Drains constructed in conjunction with stabilized Permeable Asphalt Stabilized Base (PASB) may be trenched immediately adjacent to the placed pavement. Drains constructed in conjunction with unstabilized Open Graded Aggregate Base (OGAB) shall be held 150 mm [**6 inches**] away from the pavement to minimize undercutting. In either case, the drain must be located so as to totally intercept the permeable aggregate base.

Drains constructed in conjunction with PCC pavement shall be placed after the pavement is in place. Drains constructed in conjunction with bituminous pavements shall be placed after the base/binder course(s) are in place, but before the final wearing course is laid, to avoid damage to the finished pavement. All drains shall be constructed before placement of any required shoulder aggregate or base.

Materials removed by the trenching operation shall be disposed of off the Right of Way unless other uses are approved by the Engineer. Contamination of the permeable aggregate base, the drainage trench aggregate, or the shoulder aggregate/base will not be permitted. Any trenching spoils on the bituminous pavement prior to placing the wearing course shall be totally cleaned-off by sweeping to the satisfaction of the Engineer.

(B) Geotextile Trench Lining

The bottom of the drainage trench shall be lined with geotextile. (The PE pipe shall <u>not</u> be wrapped with geotextile.) On the pavement side of the trench, the geotextile must terminate within the dense-graded aggregate base (filter layer) located below the permeable aggregate base, and may neither extend up onto the permeable aggregate base nor fall below the bottom of the dense-graded aggregate base (filter layer). The geotextile may <u>not</u> lap up onto the permeable aggregate base as this will restrict movement of water through the base and into the drainage trench. On the side of the trench farthest from the pavement, the geotextile may terminate within or above the dense-graded aggregate base (filter layer), but not below it.

(C) Compaction

The permeable aggregate trench backfill shall be moist to the extent that it is easily placed and receive "vibratory compaction" to the satisfaction of the Engineer. Compaction of permeable aggregate may not be accomplished by tire-rolling. A self-leveling trenching machine shall be used if the off-set between tracks/tires of the trencher is greater than 150 mm [**6 inches**]. After placement and compaction, the top of the permeable aggregate trench backfill shall be at least as high as the top of the permeable aggregate base.

(D) Maintenance

Once the drain and discharge pipe are in place, no construction equipment will be allowed to traverse the drain or discharge pipe until the system is properly protected (covered) to the satisfaction of the Engineer. To avoid contamination of the completed drain and backfilled trench, the shoulder aggregate shall be placed as soon as practical. Contaminated materials shall be removed and replaced at no cost to the County. The drain shall remain open and operative after installation so that water does not collect in the pipe.

S-92.3 MEASUREMENT AND PAYMENT

Measurement will be made by the length of satisfactorily furnished and installed Subsurface Drains, Permeable Aggregate Base Type, approved by the Engineer. Payment will be made under Item 2502.541 (100 mm [4"] Perforated PE Pipe Drain) at the Contract bid price per meter [linear foot], which shall be full compensation for trenching, geotextile trench liner, furnishing and installing PE pipe, trench backfill, compaction, and all other associated work.

S-93 (2502) SUBSURFACE DRAINS, SUBCUT DRAIN TYPE

This work shall consist of constructing subcut drains in accordance with the applicable provisions of Mn/DOT 2502, the "option" details in the Plan, and these Special Provisions. This drain is intended to collect and discharge infiltration water that may accumulate in the bottom of granular-backfilled subcuts. Subcut drains may also be used to control high groundwater conditions.

Unless otherwise specified, the Contractor may choose either of two options for the construction of these drains: Option 1, thermoplastic pipe may be placed in the bottom corner of the subcut and then the subcut backfilled; Option 2, the subcut is first backfilled and then PE pipe is placed by machine trencher.

S-93.1 MATERIAL REQUIREMENTS

Subcut drain pipe shall be 100 mm [**4 inch**] perforated Thermoplastic (TP) Pipe, Mn/DOT 3245, for Design Option One (1) or 100 mm [**4 inch**] perforated Corrugated Polyethylene (PE) Tubing, Mn/DOT 3278, for Design Option Two (2). Pipe in both designs shall be wrapped with Geotextile, Mn/DOT 3733, Type I. Fine Filter Aggregate shall meet the requirements of Mn/DOT 3149.2J, which is modified so that the percent passing the 425 μm [**No. 40**] sieve will be 5-35.

S-93.2 CONSTRUCTION REQUIREMENTS

(A) Subcut drains may connect directly to permanent drainage structures or be outletted to the ditch via a discharge pipe and headwall. Where so specified, connections to drainage structures shall be incidental work and shall meet the approval of the Engineer.

Pipe shall generally be placed according to the Plan details, but other configurations may be approved by the Engineer to accomplish the desired results. Unless otherwise specified, drain grades shall not be less than 0.2 percent and outlets to the ditch shall be at low points or at a maximum spacing of 152.4 m [**500 feet**]. Structure outlets may be at maximum spacings of 243.8 m [**800 feet**], provided both ends of the pipe are tied to structures. The Contractor shall supply and use laser grade control equipment when placing all TP pipe and for PE pipe when pipe grades do not follow working grades at a constant depth.

(B) Design Option One (1)

The Contractor shall place 100 mm [**4 inch**] perforated Thermoplastic (TP) Pipe in the bottom of the subcut according to the design typical. At least 300 mm [**12 inches**] of subcut backfill shall be placed above the pipe before any compactive effort is applied.

Pipe may be furnished with either bell and spigot or sleeve couplings and either gasket or solvent joints. All solvent joints shall be left uncemented unless cement is specifically requested by the Engineer. The ends shall be appropriately marked showing the depth of the bell or sleeve, so that both the Engineer and workers can easily ascertain that the joint has been fully coupled. Perforations shall be laid down. Connections to drainage structures shall be composed of angle fittings not to exceed 22-1/2 degrees.

(C) Design Option Two (2)

The Contractor shall place 100 mm [**4 inch**] perforated Corrugated Polyethylene (PE) Tubing after the subcut is partially or totally backfilled.

Drains shall be placed by machine trencher capable of cutting the trench, shaping the trench bottom to cradle the lower one-third of the pipe, laying the pipe, and backfilling with filter aggregate in one simultaneous and continuous operation. Plowing will not be permitted. The trenching head shall be equipped with a shield to prevent adjacent material from caving. Trench width shall be 200 mm [**8 inch**] minimum, 250 mm [**10 inch**] maximum, with pipe being centered therein.

The trench shall be backfilled with Fine Filter Aggregate. Filter aggregate shall be free-flowing and receive vibratory compaction to the satisfaction of the Engineer. In addition to the required trench compaction, at least one pass of general compaction (as directed by the Engineer) shall be made over the trench prior to placing the overlying required pavement structure.

The trenching operation may be performed anytime after at least 600 mm [**24 inches**] of subcut backfill has been placed and compacted. If the trenching is not done until the subcut is completely backfilled, only the lowermost 600 mm [**24 inches**] of the trench need be backfilled with Fine Filter Aggregate. The remaining trench fill shall be similar to that required for the subcut and care must be taken to achieve satisfactory density.

S-93.3 MEASUREMENT AND PAYMENT

Measurement will be made by the length of furnished and satisfactorily installed Subsurface Drain, Subcut Drain Type, approved by the Engineer. Regardless of option chosen, payment will be made under Item 2502.541 (100 mm [**4"**] Perforated TP Pipe Drain) at the Contract bid price per meter [**linear foot**], which shall be full compensation for fabric wrapped pipe, furnished and installed as specified, filter aggregate backfill and compaction, and all other associated work.

S-94 (2503) PIPE SEWERS

Pipe sewers shall be furnished and installed in accordance with the provisions of Mn/DOT 2503, Section 12 of the AASHTO LRFD Bridge Design Specifications, except as modified as follows:

S-94.1 Each shipment of pipe shall be accompanied by a Certification of Compliance, furnished by the pipe manufacturer, in accordance with Mn/DOT 1603. Damaged pipe shall not be used.

S-94.2 At various locations, installation of the new storm sewer pipes across the various roadways are required to provide adequate drainage during construction. These installations will result in the removal of the existing pavement. In those locations where pavement is required to carry traffic during the staged construction the Contractor will be required to replace the removed bituminous pavement in accordance with the provisions of "Bituminous Patch Special" throughout the entire area disturbed by the pipe installation, and as directed by the Engineer.

S-94.3 Concrete pipe ties shall be furnished and installed in accordance with Standard Plate 3145 in the locations and pipe runs identified in the plans, details and as directed by the Engineer. Furnishing and installing concrete pipe ties shall be an incidental expense to the Contract unit price per linear foot of the appropriate storm sewer pipe pay item for the size installed.

S-94.4 COUPLINGS

Where the Contractor is required in the plan to use corrugated polyethylene (CP) and polyvinyl chloride (PVC) pipe the following shall apply:

Connections shall be made with bell and spigot joints. Bell and spigot joints shall utilize a gasket if necessary to make the joint soil-tight. At a minimum all joints will be soil-tight unless otherwise specified.

When a silt-tight joint is specified, it will require a bell and spigot joint utilizing an elastomeric rubber seal (gasket) meeting ASTM F477 able to pass a laboratory pressure test of at least 2 psi.

When a water-tight joint is specified in the plans, it will be required that the joint meet the requirements of ASTM D3212 except as modified. The internal pressure test shall be performed at 10 psi (minimum) with the pipe in straight alignment. The vacuum test is not required. The Engineer shall be provided a laboratory certification that the pipe coupler for each size of pipe meets or exceeds these requirements. The Engineer shall also be furnished shop drawings of each pipe coupler.

S-94.5 DEFLECTION TESTING

Where the Contractor is required in the plan to use corrugated polyethylene (CP) and polyvinyl chloride (PVC) pipe the following shall apply:

The pipe shall be evaluated to determine whether the specific internal diameter of the barrel has been reduced more than 5%. Deflection testing shall be done not less than thirty days after installation.

Deflection testing for pipes with an inside diameter of 24" or less shall be performed by the Contractor using a nine-point mandrel approved by the Engineer. The diameter of the mandrel shall be 95% of the certified actual mean inner diameter of the pipe. The mandrel must be pulled through the pipe by non-mechanical means. Deflection testing of pipes with an inside diameter greater than 24" shall be inspected with a mandrel, or other method capable of making the deflection measurement that is approved by the Engineer. If direct measurements are allowed, locations will be selected randomly by

the Engineer, but at a minimum, measurements will be taken every 10 feet throughout the pipe length and at the pipe ends. In addition the pipe must be visually inspected and measurements taken at any location where anomalies or deflections are observed. Personnel making direct measurements must meet confined space entry requirements.

Pipe through which the mandrel does not pass or which direct measurement indicates there is more than 5% deflection will be considered unacceptable. New pipe or deformed pipe that is not damaged shall be re-laid. The re-laid pipe shall be retested for deflection after no less than five days.

S-94.6 PIPE JOINT (FROM STRUCTURE NO. 5400 TO 5406)

Install pipe with gasketed joints on the pipes identified in the plan, MnDOT Specifications and the following:

Pipe ties to be used for 72" RCP along retaining wall No. 3 from Station 58+20.59 to Station 52+26.2 along SW Ramp.

(1) Install gasketed joints meeting AASHTO M198 performance requirements for joints and Standard Plate 3006.

(2) Provide a full circumferential wrap of Geotextile Type II MnDOT 3733 extending at least 12 inches [300 mm] on each side of the joint. Secure the circumferential wrap against the outside of the pipe by metal or plastic strapping or by other methods approved by the Engineer.

(3) Tie concrete pipe sections together as shown on Standard Plate 3145 with the following exceptions:

a. Install three approved fasteners at each joint at locations shown on the plan.

b. Use extra strong ties with a rod thread diameter of 1-1/4"

Providing the three pipe ties as detailed on sheet 418, shall be incidental cost to the unit price bid for the appropriate class of 72" RCP installed.

S-94.7 POST CONSTRUCTION INSPECTION (FROM STRUCTURE NO. 5400 TO 5406)

Conduct visual internal inspections on buried rigid pipe installations to identify anomalies that may affect long-term performance such as cracks, joint quality and alignment. Conduct internal inspections after backfill has been placed and compacted to final fill height and prior to installation of pavement. Pipe must meet AASHTO LRFD Bridge Construction Specifications Section 27 and be approved by the engineer. Remove or repair all unacceptable pipe to the satisfaction of the engineer.

Providing visual internal inspections prior to installation of pavement shall be incidental cost to the unit price bid for the appropriate class of 72" RCP installed.

S-95 (2503) CONNECT TO EXISTING STORM SEWER

This work consists of constructing connections into existing storm sewers pipes in accordance with the applicable Mn/DOT Standard Specifications and the following:

Connecting to existing storm sewers pipeshall include excavation to locate the existing line prior to staking of upstream drainage structure and storm sewer alignment and all associated time delays.

Measurement will be made by the number of connections constructed as specified. Payment will be under Item 2503.602 (Connect to Existing Storm Sewer) at the Contract bid price per each, which shall be compensation in full for all costs incidental thereto, including but not limited to, all materials and labor necessary to connect the proposed drainage structure or pipe into the existing storm sewer pipe. Any damage caused to the existing storm sewer pipe shall be repaired at no expense to the Department and to the satisfaction of the Engineer.

S-96 (2503) REPAIR SEWER PIPE

Repair Sewer Pipe shall consist of renovating existing pipes in accordance with the details in the plan at those locations identified in the plan or specified by the Engineer. At these locations payment at the contract unit price per each Item No. 2506.603 “Repair Sewer Pipe” shall be compensation in full for all costs of furnishing and installing the required materials as necessary to complete the structure renovation as detailed, specified, and as directed by the Engineer which shall be compensation in full for all costs incidental thereto, including but not limited to, all materials and labor necessary to connect the proposed drainage structure or pipe into the existing storm sewer pipe. Any damage caused to the existing storm sewer pipe shall be repaired at no expense to the County and to the satisfaction of the Engineer.

The Contractor shall submit a repair method to the Engineer for review and approval. Work to Repair Sewer Pipe shall not begin until the Contractor receives approval from the Engineer. The Contractor shall be responsible to make repairs satisfactory to the Engineer and will be responsible to have the repaired storm sewer or casing inspected. The repair will involve open cut excavation to replace/repair the section of pipe listed below.

S-96.1 This work shall consist of removing an in place abandoned watermain that runs through the top existing 84” concrete storm sewer pipe with a minimum 9” deapth 3Y43 concrete collar with mesh reinfourcment. The repair sewer pipe crossing Is located at approximately NBCSAH5 station 108+03 - 65’ LT.

S-96.2 After removal of Temporary Structure No. 5505 and 5506 from permanent storm sewer pipes as identified on the Temporary Drainage Tabulation Sheet 412, storm sewer pipes shall be restored to its permanent water-tight condition.

Removing Castings, Temporary Drainage Structure, and Pipes is Incidental.

Temporary Drainage Structure 5505 (Design J) is shown in profile on sheet 379; repair sewer pipe shall consist of repairing 48” RCP.

Temporary Drainage Structure 5506 (Design F) is shown in profile on sheet 391; repair sewer pipe shall consist of repairing 33” RCP. The repair of 48 inch steel casing pipe to a permanent water-tight condition with the annular space between the 33” RCP and casing shall be incidental to Item 2503.603- 48" Steel Casing Pipe.

All Repair Sewer Pipe piping shall be watertight and free from leaks.

Measurement will be made by the number of pipe sewer locations repaired as specified.

Payment will be made under Item 2503.602 (Repair Sewer Pipe) at the Contract bid price per each which shall be payment in full for all costs incidental thereto.

S-97 (2503) CONSTRUCT BULKHEAD

This work shall consists of constructing 1 permanent 12" Masonry Bulkhead for an 8" PVC and 1 temporary bulkhead in Structure No. 5416 to bulkhead the 8' x 6' Box Culvert.

Measurement will be made by the number of bulkheads constructed as specified.

Payment will be made under Item 2503.602 (Construct Bulkhead) at the Contract bid price per each which shall be payment in full for all costs incidental thereto.

S-98 (2503) 48" STEEL CASING PIPE

This work shall consist of furnishing and installing 48 inch steel casing pipe at locations shown on sheet 391 for the 33" RCP carrier pipe under Retaining Walls No. 1 and No. 5. The steel casing shall have a minimum wall thickness of 0.625".

Carrier Pipe Size (inches)	Casing Pipe Size (inches)	Casing Pipe Thickness (inches)
33-RCP CL-V	48	0.625

S-98.1 Steel Casing Pipe Installation – The construction of the 33" RCP storm sewer requires the placement of a steel casing pipe in multiple locations, inside of which the 33" RCP will be installed under proposed retaining walls. The casing shall be new welded or seamless steel pipe conforming to the Standards of ASTM A53, Grade B with yield strength of 35,000 psi Steel for cylinder shall be 35,000 psi minimum yield strength conforming to requirements of appropriate grade: ASTM A36, A139, A283, A572, A607, A907, A935, or A936. The wall thicknesses for the pipes to be bid shall be 0.625 (5/8)-inch.

The carrier pipe and casing shall be separated by a spacer manufactured from high density polyethylene. Spacer shall be installed to support the weight of the carrier pipe and its contents. As a minimum, the spacer shall be placed a maximum of three (3) foot from each side of a joint and evenly spaced along the carrier pipe with three (3) spacers per each length of carrier pipe. Timber skids are not allowed. Casing Spacers: Stainless steel shell, 2.5 inch high molecular weight anti-corrosive coated runners. Shall be designed to center carrier pipe inside of the casing pipe and shall prevent carrier pipe from floating. Spacer configuration per Drawings. Casing End Seals: Rubber boot seal with stainless steel clamps.

Upon completion of the carrier pipe installation, the annular space between the carrier and casing shall be densely filled with sand and the ends sealed water tight. The sand shall be blown into the annular space or installed by other approved methods.

S-98.2 JOINTING:

Field welds by a certified welder in accordance with manufacturer's recommendations. Steel pipe casing joints shall be continuously welded with butt joint per AWS D1.1. The welds shall attain the full strength of the pipe and shall result in a full watertight section.

The inner face of the internal weld shall be flush with the pipe to facilitate the installation of the conveyance pipe in the pipe casing. Casing spacers shall be placed on carrier pipe per manufacturer's instructions to ensure centering of carrier pipe within casing pipe as shown on Drawings and Casing pipe detail sheet U27

S-98.3 Removal of Temporary Structure No.5506 (Design F) will be made under Item 2503.602 Repair Sewer Pipe, the repair of 48 inch steel casing pipe to a permanent water-tight condition with the annular space between the carrier and casing densely filled shall be incidental to Item 2503.603 48" Steel Casing Pipe.

S-98.4 Reference City Burnsville Specifications PART D: PIPELINE STEEL CASING PIPE AND BORING AND JACKING SPECIFICATIONS

S-98.5 Measurement will be made by the length of steel casing pipe installed as specified.

S-98.6 Payment will be made under Item 2503.603 48" Steel Casing Pipe at the Contract bid price per linear foot. Such payment shall be compensation in full for all costs incidental thereto including the end caps, casing end seals, rubber boot seal with stainless steel clamps, filling casing and connecting/repairing pipe after removal of temporary structure as specified.

S-99 (2506) MANHOLES AND CATCH BASINS

Mn/DOT 2506 is hereby modified and/or supplemented with the following:

S-99.1 A 100 mm [4 inch] thick concrete encasement shall be placed around the outside of the manhole or catch basin as detailed in current Mn/DOT Standard Plate 4026. This encasement shall be placed at the time of final casting placement and shall be incidental for which no payment will be made.

(1) Construct manholes with cast-in-place concrete or precast sectional concrete or precast concrete pipe structures built for the purpose of providing access to underground drainage or other systems for the ingress of surface water into underground drainage systems.

(2) Plug lifting holes with a precast concrete plug, sealed and covered with mastic or mortar.

S-99.2 Adjusting Rings manufactured from High Density Polyethylene (H.D.P.E.) are approved as an alternate to concrete adjusting rings. It is important that the H.D.P.E. adjusting ring be sealed with the product recommended by the manufacturer.

S-99.3 All backfill material around manholes and catch basins shall be compacted by approved mechanical tampers.

S-99.4 All frame and ring castings to be adjusted shall be set to the elevation determined by the Engineer. The top elevation of the casting may vary from the elevation listed in the plan. In some instances, taking the existing and future traffic routing and staging into consideration, the Engineer may determine to temporarily set the casting at a lower elevation.

S-99.5 The casting assembly pay items on this contract shall be in accordance with Standard Specification 2506 for all necessary work required, method of measurement and basis of payment. Multiple adjustments may be required as directed by the Engineer to

facilitate the placement of the final bituminous wearing course. All required adjustments shall be paid for under Item No. 2506.602 “Adjust Frame and Ring Casting” at the contract unit price per each adjustment. However, no direct compensation will be made thereto for multiple adjustments of the same, casting and/ or gate valves. If more than one adjustment needs to be made, a partial payment of 75 percent may be made on the first adjustment and the remainder paid after acceptable adjustment of the casting to the final grade.

S-100 (2506) CONNECT INTO EXISTING DRAINAGE STRUCTURE

This work consist of constructing connections into existing drainage structures in accordance with the applicable Mn/DOT Standard Specifications and the following:

Any connection to exiting storm sewer structures shall be done using “core drill” or saw-cutting only. Hammering of new openings in the structures will not be allowed.

Measurement will be made by the number of connections constructed as specified. Payment will be made under Item 2506.602 (Connect Into Existing Drainage Structure) at the Contract bid price per each, which shall be compensation in full for all costs incidental thereto, including but not limited to, all materials and labor necessary to install proposed concrete pipe into an existing drainage structure. Any damage caused to the existing drainage structure shall be repaired at the Contractor's expense to the satisfaction of the Engineer.

S-101 (2511) RIPRAP

Random Riprap Class III shall be constructed in accordance with the provisions of Mn/DOT 2511, except as modified as follows:

S-101.1 Granular filter and riprap shall be placed within the shortest practicable time span, after installation of culvert outfalls to minimize erosion.

S-101.2 Furnishing and placing granular or geotextile filter material under the riprap shall be incidental and no direct compensation will be made therefore.

S-101.3 Riprap extents and configuration for stilling basins associated with BMPs shall be determined from drainage the Plans and the details shown in the Plans

S-102 (2521) WALKS

The provisions of MnDOT 2521 are modified in accordance with the following:

S-102.1 MnDOT 2521.3C3 is hereby modified to include the following provision:

After completing final finishing operations, cure all exposed concrete surfaces. Use one of the following curing methods:

(1) Place the membrane curing compound conforming to 3754 or 3755 within 30 minutes of concrete placement or once the bleed water has dissipated, unless the Engineer directs otherwise in accordance with 2521.3.E.1.a. Place the membrane curing compound on the edges within 30 minutes after permanent removal of the forms or curing blankets, unless the Contract requires otherwise.

(2) Place plastic curing blankets or completely saturated burlap curing blankets as soon as practical without marring the surface in accordance with 2521.3.E.1.b.

Failure to comply with these provisions will result in the Engineer applying a monetary deduction in accordance with 1503. When there is not a separate Contract unit price for Structural Concrete, the Department will apply a monetary deduction of $50.00 per cu. yd [$65.00 per cu. m] or 50 percent of the Contractor-provided invoice amount for the concrete in question, whichever is less.

Whenever weather conditions are such as to cause unusual or adverse placing and finishing conditions, expedite the application of a curing method or temporarily suspend the mixing and placing operations, as the conditions require.

If necessary to remove the coverings to saw joints or perform other required work, and if the Engineer approves, remove the covering for the minimum time required to complete that work.

C3a Curing Methods

C3a(1) Membrane Curing Method

Before application, agitate the curing compound as received in the shipping container to obtain a homogenous mixture. Protect membrane curing compounds from freezing before application. Handle and apply the membrane curing compound in accordance with the manufacturer's recommendations.

Apply the curing compound with an approved airless spraying machine in accordance with the following:

(1) At a rate of 1 gal per 150 sq. ft (1 L per 4 m^2) of surface curing area.

(2) Apply homogeneously to provide a uniform solid white opaque coverage on all exposed concrete surfaces (equal to a white sheet of typing paper). Some MnDOT approved curing compounds may have a base color (i.e. yellow) that cannot comply with the above requirement. In this case, provide a uniform solid opaque consistency meeting the intent of the above requirement.

(3) If the curing compound is damaged during the curing period, immediately repair the damaged area by re-spraying.

The Engineer will approve the airless spraying machine for use if it is equipped with the following:

(1) A re-circulating bypass system that provides for continuous agitation of the reservoir material,

(2) Separate filters for the hose and nozzle, and

(3) Multiple or adjustable nozzle system that provides for variable spray patterns.

If the Engineer determines that the initial or corrective spraying may result in unsatisfactory curing, the Engineer may require the Contractor to use the blanket curing method, at no additional cost to the Department.

C3a(2) Curing Blanket Method

After completion of the finishing operations and without marring the concrete, cover the concrete with curing blankets. Install in a manner that envelops the exposed concrete and prevents loss of water vapor. After the concrete has cured, apply membrane curing compound to the concrete surfaces that will remain exposed in the completed work.

C3b Protection Against Rain

Protect the concrete from damage due to rain. Have available, near the site of the work, materials for protection of the edges and surface of concrete. Should any damage result, the Engineer will suspend operations until the Contractor takes corrective action and may subject the rain-damaged concrete to 1503 and 1512.

C3c Protection Against Cold Weather

If the national weather service forecast for the construction area predicts air temperatures of 36 °F [1 °C] or less within the next 24 h and the Contractor wishes to place concrete, submit a cold weather protection plan.

Protect the concrete from damage including freezing due to cold weather. Should any damage result, the Engineer will suspend operations until corrective action is taken and may subject the damaged concrete to 1503 and 1512.

C3c(1) Cold Weather Protection Plan

Submit proposed time schedule and plans for cold weather protection of concrete in writing to the Engineer for acceptance that provides provisions for adequately protecting the concrete during placement and curing. Do not place concrete until the Engineer accepts the cold weather protection plans.

S-102.2 MnDOT 2521.3E is hereby deleted and replaced with following:

E Backfilling

Protect newly placed concrete from damage by adjacent vibratory or backfilling operations for a minimum of 24 hours. Perform vibratory operations and backfilling 72 hours after placing the concrete or after the concrete reaches a compressive strength of at least 3,000 psi [**20.7 Mpa**]. The Engineer will cast, cure, and test the concrete control specimens in accordance with 2461.3G5. If damage results from any of these operations the Engineer will suspend all operations until corrective action is taken and a new method is approved. The Engineer may subject damaged concrete to 1503 and 1512.

The Contractor may hand operate concrete consolidation equipment and walk behind vibratory plate compactors 24 hours after placing the concrete, and other equipment as approved by the Engineer in conjunction with the Concrete Engineer.

After curing, backfill or perform embankment construction to the elevations shown on the plans, without damaging the concrete. Use suitable grading materials from the excavation for backfill material in accordance with 2105, unless otherwise required by the Contract. Place and compact the backfill material in accordance with 2105.

Dispose of surplus excavated materials in accordance with 2105.

S-102.3 MATERIALS 3" BITUMINOUS WALK

A. Bituminous

The bituminous material for mixture for bituminous walk shall be Type SP 12.5 Wearing Course – SPWEB340C. The bituminous mixture shall meet the Wearing Course Mixture requirements of 2360 as modified in these Special Provisions

S-102.4 CONSTRUCTION REQUIREMENTS

A. Concrete Curing and Protection

The application rate of the membrane curing shall be one gallon of compound per 125 square feet of surface.

The only curing method authorized for concrete placed in walk construction after October 1st shall be the "Blanket Curing Method". After October 1st, the concrete shall be cured a minimum of 72 hours, and shall be treated with two applications of approximately 0.06 gallons of concrete treating oil per square yard, applied uniformly over all concrete surfaces which will remain exposed in the completed work. The concrete shall be clean and dry when treating oil is applied.

No extra compensation will be made for furnishing high early strength concrete where necessary to accommodate traffic, facilitate construction or comply with traffic provisions or at other locations, as the Engineer may deem necessary.

Any concrete walk placed that has strength below 3300 Psi shall be removed and replaced at no cost to the Owner. Any concrete walk placed that has a strength between 3300 and 3900 Psi shall be either removed and replaced at no cost to the owner or shall remain in place with no payment, at the Contractor's option. All strengths indicated above are the result of a 28-day cylinder break. Upon finding cylinders that break below 3900 Psi, rebound hammer tests shall be taken to establish the extent of the failing concrete walk.

B. Joint Construction

Expansion joints shall be placed at intervals not exceeding 40 feet and wherever a concrete sidewalk of more than 6 feet in width abuts the curb, a building, driveway, other sidewalks, around stop boxes, poles or other objects in the sidewalk. Expansion joint material shall be incidental to sidewalk construction.

C. Bituminous Walk Embankments

Construction at the subgrade elevation for the 3-Inch Bituminous Walk shall be tested for bearing capacity by 4-Axle truck with a gross weight of 28.5 tons. Bearing capacity test shall be performed as required at a time when the grading grade of Bituminous Walk is within 0.05 Ft. of the grade shown on the cross sections and as staked by the Engineer. The Contractor shall take precautions to protect culverts and other structures during the Bearing capacity test. The grading grade will be considered to be unstable if the surface shows yielding or rutting of more than 0.08 Ft. The Contractor shall repair, at no expense to the Department; unstable areas to the extent that it will be stable when retested. The

performing of Bearing capacity test (including all repairs to unstable sections) shall be incidental work with no direct compensation.

D. Bituminous Walk Class 5

All stages of aggregate base placement and spreading, will require, one (1) self-propelled Pneumatic Tired Roller and one (1) self-propelled Steel-Wheeled Roller. The Pneumatic Tired Roller shall exert a pressure of not less than two hundred (200) pounds per inch of rolling width. The roller shall have a minimum of seven (7) tires. The Steel-Wheeled Roller shall weigh not less than eight (8) tons, shall exert a pressure on the rear drum of not less than two hundred fifty (250) pounds per linear inch, and shall operate at a frequency of eight (8) to ten (10) impacts per foot. The rollers shall, be operated continuously so all areas are thoroughly compacted to the required density, as the aggregate base is being placed and spread.

E. Bituminous Walk Paving

Bituminous walks shall be placed with a self-propelled paver. Truck powered paver will not be accepted.

S-102.5 No deductions in the walk measurement will be made for the metal covers, miscellaneous signal, lighting structures, sign collars or utility access covers encompassed in the work.

S-102.6 It shall be the Contractor's responsibility and expense to provide temporary access, if required by the Engineer, to any property where access is affected by walk construction.

S-102.7 The Engineer shall have the right to require the construction of walk within 24 hours of his direction in all locations where in his opinion the absence of a hard surface walkway is an undue hardship to the affected business, residence or pedestrian traffic.

S-102.8 The Contractor may be required to provide openings in the concrete and bituminous walks for permanent mailbox installations. If required, the Engineer shall designate the size and location of the openings. Providing the mailbox post openings, if required, shall be incidental cost to the unit price bid for the appropriate type of walk constructed.

S-102.9 No additional payment, other than that made for separate Contract items, will be made for incorporating the sign collars, or other items into the concrete walk construction.

S-103 (2521) CONCRETE WALK (ADA)

This work shall consist of constructing Concrete Walk, including necessary Subgrade Preparation, Aggregate Base, and Grading as indicated in the Plan, in accordance with the provisions of MnDOT 2112, 2211, 2521, other Contract provisions, and the following:

S-103.1 CONSTRUCTION REQUIREMENTS

(A) **Concrete Walk** – The walk shall be constructed as detailed in the Plan and conform to the requirements of MnDOT 2521, Walks.

To avoid corner breaks, all walk edges shall be formed and constructed perpendicular to the back of curb and gutter sections and concrete structures for a one foot minimum distance.

All existing signs shall be salvaged and reinstalled as directed by the Engineer or as indicated in the Plan.

(B) **Grading** – If not otherwise detailed in the Plan, all fill sections shall be graded flush with the top of walk for a minimum 18 inches from the edge of walk and then down at a maximum 1:3 slope to existing terrain. The Contractor shall blend in the toe of fill slope and adjacent areas so as not to adversely affect drainage.

If the Plan calls for payment of Aggregate Base and/or other Grading items for a pedestrian facility, then payment will only be made for the locations specifically provided for in the Plan. All salvaging and reinstalling of signs as a result of concrete walk construction shall be incidental unless specifically provided for in the Plan.

S-104 (2531) CONCRETE CURBING

The provisions of MnDOT 2531 are supplemented and/or modified with the following:

S-104.1 The last paragraph of MnDOT 2531.3C shall be deleted and replaced with the following:

Longitudinal construction joints between a concrete median or gutter section and a concrete pavement shall not be sawed or sealed.

S-104.2 MnDOT 2531.3G is hereby modified to include the following provision:

After completing final finishing operations, cure all exposed concrete surfaces. Use one of the following curing methods:

(1) Place the membrane curing compound conforming to 3754 or 3755 within 30 minutes of concrete placement or once the bleed water has dissipated, unless the Engineer directs otherwise in accordance with 2521.3.E.1.a. Place the membrane curing compound on the edges within 30 minutes after permanent removal of the forms or curing blankets, unless the Contract requires otherwise.

(2) Place plastic curing blankets or completely saturated burlap curing blankets as soon as practical without marring the surface in accordance with 2521.3.E.1.b.

Failure to comply with these provisions will result in the Engineer applying a monetary deduction in accordance with 1503. When there is not a separate Contract unit price for Structural Concrete, the Department will apply a monetary deduction of $50.00 per cu. yd [$65.00 per cu. m] or 50 percent of the Contractor-provided invoice amount for the concrete in question, whichever is less.

Whenever weather conditions are such as to cause unusual or adverse placing and finishing conditions, expedite the application of a curing method or temporarily suspend the mixing and placing operations, as the conditions require.

If necessary to remove the coverings to saw joints or perform other required work, and if the Engineer approves, remove the covering for the minimum time required to complete that work.

G1 Curing Methods

G1a Membrane Curing Method

Before application, agitate the curing compound as received in the shipping container to obtain a homogenous mixture. Protect membrane curing compounds from freezing before application. Handle and apply the membrane curing compound in accordance with the manufacturer's recommendations.

Apply the curing compound with an approved airless spraying machine in accordance with the following:

(1) At a rate of 1 gal per 150 sq. ft (1 L per 4 m^2) of surface curing area.

(2) Apply homogeneously to provide a uniform solid white opaque coverage on all exposed concrete surfaces (equal to a white sheet of typing paper). Some MnDOT approved curing compounds may have a base color (i.e. yellow) that cannot comply with the above requirement. In this case, provide a uniform solid opaque consistency meeting the intent of the above requirement.

(3) If the curing compound is damaged during the curing period, immediately repair the damaged area by re-spraying.

The Engineer will approve the airless spraying machine for use if it is equipped with the following:

(1) A re-circulating bypass system that provides for continuous agitation of the reservoir material,

(2) Separate filters for the hose and nozzle, and

(3) Multiple or adjustable nozzle system that provides for variable spray patterns.

If the Engineer determines that the initial or corrective spraying may result in unsatisfactory curing, the Engineer may require the Contractor to use the blanket curing method, at no additional cost to the Department.

G1b Curing Blanket Method

After completion of the finishing operations and without marring the concrete, cover the concrete with curing blankets. Install in a manner that envelops the exposed concrete and prevents loss of water vapor. After the concrete has cured, apply membrane curing compound to the concrete surfaces that will remain exposed in the completed work.

G2 Protection Against Rain

Protect the concrete from damage due to rain. Have available, near the site of the work, materials for protection of the edges and surface of concrete. Should any damage result, the Engineer will suspend operations until the Contractor takes corrective action and may subject the rain-damaged concrete to 1503 and 1512.

G3 Protection Against Cold Weather

If the national weather service forecast for the construction area predicts air temperatures of 36 °F [1 °C] or less within the next 24 h and the Contractor wishes to place concrete, submit a cold weather protection plan.

Protect the concrete from damage including freezing due to cold weather. Should any damage result, the Engineer will suspend operations until corrective action is taken and may subject the damaged concrete to 1503 and 1512.

G3a Cold Weather Protection Plan

Submit proposed time schedule and plans for cold weather protection of concrete in writing to the Engineer for acceptance that provides provisions for adequately protecting the concrete during placement and curing. Do not place concrete until the Engineer accepts the cold weather protection plans.

S-104.3 MnDOT 2531.3J is hereby deleted and replaced with the following:

J Backfilling

Protect newly placed concrete from damage by adjacent vibratory or backfilling operations for a minimum of 24 hours. Perform vibratory operations and backfilling 72 h after placing the concrete or after the concrete reaches a compressive strength of at least 3,000 psi [**20.7 Mpa**]. The Engineer will cast, cure, and test the concrete control specimens in accordance with 2461.3G5. If damage results from any of these operations the Engineer will suspend all operations until corrective action is taken and a new method is approved. The Engineer may subject damaged concrete to 1503 and 1512.

The Contractor may hand operate concrete consolidation equipment and walk behind vibratory plate compactors 24 hours after placing the concrete, and other equipment as approved by the Engineer in conjunction with the Concrete Engineer.

After curing, backfill or perform embankment construction to the elevations shown on the Plans, without damaging the concrete. Use suitable grading materials from the excavation for backfill material in accordance with 2105, unless otherwise required by the Contract. Place and compact the backfill material in accordance with 2105.

S-104.4 CONSTRUCTION REQUIREMENTS

The Contractor shall schedule his operations such that a minimum of 4 hours during a working day is provided between the time the string line is set and commencement of the placement of concrete curb and gutter. This time will be used by the Engineer to check proposed curb locations and grades.

No extra compensation will be made for furnishing high early strength concrete where necessary to accommodate traffic, facilitate construction or comply with traffic provisions or at other locations, as the Engineer may deem necessary.

Any concrete placed that has a strength below 3300 psi shall be removed and replaced at no cost to the Owner. Any concrete placed that has a strength between 3300 and 3900 psi shall be either removed and replaced at no cost to the owner or shall remain in place with no payment, at the Contractor's option. All strengths indicated above are the result of a 28-day cylinder break. Upon finding cylinders that break below 3900 psi, rebound hammer tests shall be taken to establish the extent of the failing concrete.

Driveways shall be constructed according to the details in the Plan, including all expansion joints and sawing as detailed. Expansion joint material and sawing shall meet the standard specification requirement of the City and shall be incidental to driveway construction.

Joint Construction:

Transverse expansion joints, filled with 1/2 inch preformed joint filler material, shall be placed at the ends of all curved sections; at the ends of the curved portions of entrance and street returns; and at the uniform intervals not to exceed 120 feet when the curbing is not tied to an adjoining concrete base or pavement. Longitudinal expansion joints shall be placed as shown in the Plans. Expansion joints with filler material shall also be placed at locations where the concrete surrounds or adjoins any existing fixed objects such as fire hydrants, building foundations, and other rigid structures.

S-104.5 MEASUREMENT AND PAYMENT

Construction of curb drops at driveway openings or pedestrian ramps, “beavertail” end transitions, and other similar minor variations from the standard curb and gutter section shall be incidental. Payment for areas of curb and gutter so modified shall be at the Contract unit price for the unmodified curb and gutter item.

Payment for concrete curb and gutter at the Contract unit price shall be compensation in full for all costs incidental thereto, including backfill behind the curb to an elevation 4 inches below the top of the curb and furnishing and installing the required reinforcement at catch basins.

Dispose of surplus excavated materials in accordance with 2105.

S-105 (2531) CONCRETE CURB AND GUTTER (ADA)

This work shall consist of constructing Concrete Curb and Gutter and the necessary Aggregate Base in accordance with the provisions of MnDOT 2531, other Contract provisions, and the following:

S-105.1 CONSTRUCTION REQUIREMENTS

Concrete Curb and Gutter – The curb and gutter shall be constructed to meet the details in the Plan. The transition from the existing curb and gutter section to the new curb and gutter section shall occur within 5 feet of the point where the curb and gutter construction begins. The gutter inslope shall be constructed as detailed in the Plans. The gutter inslope transitions shall occur outside of the zero height curb area. The proposed gutter width shall be modified as necessary so as not to protrude into the adjacent travel lane with approval from the Engineer.

The Contractor must form, at a minimum, the top 1½ inches of the gutter face. The Contractor shall not use the existing roadway edge as a form for the top 1½ inches of the gutter face unless approved by the Engineer.

If the gutter flow line in front of the proposed curb ramps exceeds 2.0 percent slope, the flow line should be adjusted to allow a flatter slope in front of the curb ramps, but still provide positive drainage. The Contractor must consult with the Engineer before modifying any flow line that will result in the slope of the adjacent bituminous patching exceeding 5 percent.

The Contractor shall construct a contraction joint through the curb and gutter section at the bottom of the curb height tapers where the curb height equals zero inches.

S-106 (2531) TRUNCATED DOMES

This work consists of furnishing and installing Truncated Dome Systems (detectable warning surfaces) at pedestrian curb ramps in compliance with the Public Rights-of-Way Accessibility Guidelines (PROWAG). This work shall be performed in accordance with the applicable MnDOT Standard Specifications, these Special Provisions, the details in the Plan, and the following:

S-106.1 CONSTRUCTION REQUIREMENTS

The Contractor shall select a truncated dome product from the approved products list at http://www.dot.state.mn.us/products/miscmaterials/truncateddomes.html. The truncated domes shall be placed in concrete and shall be pressed firmly into the concrete to the point that concrete fills the vent holes on the truncated dome plates. No cutting of truncated domes will be allowed unless approved by the Engineer. Any swelling of the concrete that occurs around the truncated domes must be screeded off and the surrounding concrete shall be finished flush with the truncated dome plate edge. To ensure that the truncated domes are well seated in concrete, the Contractor should provide a 3 inch minimum border around the edges of the truncated domes.

The Contractor will be allowed to interchange 9 foot 5 inch and 10 foot radial truncated domes when either is called for in the Plan. If the Contractor does make a substitution, the Contractor will be required to modify the curb line radius to match the truncated domes and meet the detectable edge requirements shown on **Standard Plan Sheet No. 5-297.250 (Sheet 5 of 5).**

S-106.2 METHOD OF MEASUREMENT

The truncated dome area will be measured by the square foot.

S-106.3 BASIS OF PAYMENT

The truncated dome area will be measured by the square foot. Payment will be made under Item No. 2531.618 (Truncated Domes) at the Contract unit price per square foot, which shall be compensation in full.

S-107 (2533) PORTABLE PRECAST CONCRETE BARRIER DESIGN 8337

The Contractor shall furnish and install portable precast concrete median barriers in accordance with current Mn/DOT Standard Plate No. 8337, these provisions , the Plan details and the following:

S-107.1 All portable precast concrete median barrier shall be placed as shown in the Plans and as directed by the Engineer. The barrier shall not be removed until the Engineer approves the removal.

S-107.2 The implementation dates of Technical Memorandum No. 08-03-TS-01 shall not apply to this Contract. Only barrier built using Standard Plate No. 8337B shall be allowed.

S-107.3 The portable precast concrete median barrier shall remain the property of the Contractor upon completion of the Project. The Contractor shall arrange for disposal of the barrier outside of the Right of Way at the completion of the Project.

S-107.4 The Contractor shall only place barrier that is deemed to be acceptable.

To be acceptable, the barrier section shall meet the following minimum requirements:

- Connecting loops shall be intact and undamaged. In the case of wire rope, there shall be no delamination or missing strands.
- May have no more than hairline cracking due to handling and wear present.
- Barrier faces and/or ends may have areas where surface concrete has been lost, but no area that would affect impacting vehicle travel/direction or overall structural integrity.
- Rebar surface may be partially exposed but is not likely to affect impacting vehicle travel/direction or overall structural integrity.
- Finished edges are reasonably square with no loss of concrete and may have minimal chipping due to wear.

The barrier is **unacceptable** in the following cases:

- Any connecting loops are cracked or, in the case of wire rope, are delaminated or missing strands.
- Barrier section has major cracking that is likely to affect its structural integrity.
- Barrier faces have extensive loss of surface concrete which would affect vehicle travel/direction.
- Finished edges are so worn and rounded that the Type “F” face is no longer well-defined.
- Barrier is delaminated to the point that rebars are completely exposed and are likely to affect impacting vehicle travel/direction or structural integrity.

Additional information regarding acceptable and unacceptable barrier can be found at the website for the Office of Traffic, Safety and Operations. Which can be found at: The Contractor will be subject to a non-compliant charge for **unacceptable** Portable Concrete Barrier sections. Non-compliance charges, for each incident, will be **assessed at a rate of $250.00 per hour**, for each or any portion thereof, which the Engineer determines that the Contractor has not complied.

S-107.5 The Contractor will be subject to a non-compliant charge for failure to properly connect the Portable Concrete Barrier sections. Non-compliance charges, for each incident, will be **assessed at a rate of $250.00 per hour**, for each or any portion thereof, which the Engineer determines that the Contractor has not complied.

S-107.6 Measurement will be made by the length of Portable Concrete Barrier installed. Payment will be made under Item 2533.507 (Portable Precast Concrete Barrier Design 8337) at the Contract bid price per meter [linear foot], which shall be compensation in full, but not limited to, loading, hauling and installing the concrete median barrier and subsequent loading, hauling and removal of the barrier.

S-108 (2533) CONCRETE MEDIAN BARRIER DESIGN 8308 AND 8309

Mn/DOT Standard Plates No. 8308 (non-glare screen type) and No. 8309 (with glare screen) are hereby modified with the following:

Note No. 1 on sheet 2 of 3 shall be changed to read as follows:

(1) End anchorage must be placed at both ends of the barrier and at any expansion joint/open joint. Expansion joints shall be provided in the barriers to match expansion joints in rigid pavement, at bridge approaches, or at other structures, where uncontrolled longitudinal movement may be objectionable. For joint opening more than 2 inches in width, the gap shall be bridged using a steel plate matching the shape of the barrier.

S-109 (2533) RELOCATE PORTABLE PRECAST CONCRETE BARRIER DESIGN 8337

This work shall consist of relocating portable concrete median barrier within the Project limits as directed by the Engineer and the following:

S-109.1 When portable median barrier has to be removed from the Project roadways, but will be needed again in a later phase of the work, the Engineer may direct that it be stockpiled on or near the Project site. When this is done, payment will be made under Item 2533.508 (Relocate Portable Precast Concrete Barrier Design 8337). Payment will be made once for removing the barrier from the roadway and placing it in the stockpile; and again for removing it from the stockpile and installing it in the roadway.

S-110 (2554) TRAFFIC BARRIERS

Traffic Barriers shall be constructed in accordance with the provisions of Mn/DOT 2554 and the following:

Guardrail block-outs of composite or recycled material which meet the criteria of NCHRP 350 may be substituted for wood block-outs in the construction of Plate Beam Guardrail systems.

S-111 (2554) END TREATMENT - TANGENT TERMINAL

This work shall consist of constructing a commercial type energy absorbing terminal in accordance with Mn/DOT 2554, the details in the Plan, as recommended by the manufacturer, as directed by the Engineer, and the following:

S-111.1 Energy Absorbing Terminal options shall be as indicated on the Plan.

S-111.2 If the Contractor chooses to install an **ET-2000 PLUS Energy Absorbing Terminal**, it shall be of the type manufactured by Trinity Highway Products, LLC., Dallas, TX. The Contractor shall contact the manufacturer directly at 800/527-6050 to obtain the steel hinged breakaway (HBA) steel post option detail. Company website is http://highwayguardrail.com.

(A) Steel posts are to be used; they shall be steel hinged breakaway (HBA) posts for posts 1 through 8, as specified by the manufacturer. The first length of guardrail attached to these end terminals shall be a “half-section” of 12 feet 6 inches (12’ 6”).

(B) The adhesive object marker is sold separately from the terminal and shall be incidental to Item 2554.523 (End Treatment – Tangent Terminal) for which no direct payment will be made. The ET-2000 PLUS requires two 12”x12” adhesive object markers striped yellow and black.

(C) W-Beam Guardrail installations (8338B), including the end treatments, shall be delineated with retro reflective sheeting. The sheeting shall be applied to the last five (5) posts at each end of the terminal. The sheeting shall be applied throughout

the remainder of the installation at a maximum of 50 feet (50') [15 m]. The sheeting shall be type III or IV retro reflective sheeting meeting the requirements of ASTM standard specifications. The sheeting shall provide at least seven square inches (72") [4500 mm2] when viewed on a line parallel to the roadway centerline. The sheeting shall be attached near the top of the post as recommended by the manufacturer. For median installations, the sheeting shall be applied to both sides of the post. For roadside installations, the sheeting shall be applied only to the side of the post facing traffic. The sheeting shall be yellow or white and shall be the same color as the adjacent edge line.

S-111.3 If the Contractor chooses to install an SKT-350 Sequential Kinking Terminal, the terminal shall be an SKT-350 of the type manufactured by Road Systems, Inc., Big Spring, TX, with eight (8) steel hinged breakaway posts. The Contractor shall contact the manufacturer directly at 330/346-0721 to obtain the steel post option detail. Company website is http://www.roadsystems.com.

(A) Steel posts are to be used; they shall be steel hinged breakaway posts for posts 1 through 8, as specified by the manufacturer. The first length of guardrail attached to these end terminals shall be a "half-section" of 12 feet 6 inches (12' 6").

(B) The adhesive object marker is sold separately from the terminal and shall be incidental to Item 2554.523 (End Treatment - Tangent Terminal) for which no direct payment will be made. The SKT-350 requires one 18"x18" adhesive object marker striped yellow and black.

(C) W-Beam Guardrail installations (8338B), including the end treatments, shall be delineated with retro reflective sheeting. The sheeting shall be applied to the last five (5) posts at each end of the terminal. The sheeting shall be applied throughout the remainder of the installation at a maximum of 50 feet (50') [15 m]. The sheeting shall be type III or IV retro reflective sheeting meeting the requirements of ASTM standard specifications. The sheeting shall provide at least seven square inches (72") [4500 mm2] when viewed on a line parallel to the roadway centerline. The sheeting shall be attached near the top of the post as recommended by the manufacturer. For median installations, the sheeting shall be applied to both sides of the post. For roadside installations, the sheeting shall be applied only to the side of the post facing traffic. The sheeting shall be yellow or white and shall be the same color as the adjacent edge line.

S-111.4 The Contractor is responsible for obtaining the most current details from the manufacturer. The Contractor shall provide one copy for the Engineer.

S-111.5 Install snow plow marker (X4-5) with a 2 lb./ft. delineator post eight feet (8') long (Mn/DOT 3401) driven into ground. Extend post three feet (3') above terminal and six inches (6") adjacent to the head of each terminal or six inches (6") adjacent to the guardrail end. Install marker at the beginning and end of each run. This item shall be incidental to end treatment.

S-112 (2554) END TREATMENT – FLARED TERMINAL

This work shall consist of constructing a commercial type energy absorbing terminal in accordance with Mn/DOT 2554, the details in the Plan, as recommended by the manufacturer, as directed by the Engineer, and the following:

S-112.1 Terminal options shall be as indicated on the Plan.

S-112.2 If the Contractor chooses to install a **FLEAT-350 Energy Absorbing** Terminal, it shall be of the type manufactured by Road Systems, Inc., Big Spring, TX. using a steel hinged breakaway post. The Contractor shall contact the manufacturer directly at 330/346-0721 to obtain the steel hinged breakaway post option detail. Company website is http://www.roadsystems.com.

(A) Steel posts are to be used; they shall be steel hinged breakaway posts for posts 1 through 7, as specified by the manufacturer. The first length of guardrail attached to these end terminals shall be a "half-section" of 12 feet 6 inches (12' 6").

(B) The adhesive marker is sold separately from the terminal and shall be incidental to Item 2554.523 (End Treatment – Flared Terminal) for which no direct payment will be made. The FLEAT-350 requires one 18"x18" adhesive object marker striped yellow and black.

(C) W-Beam Guardrail installations (8338B), including the end treatments, shall be delineated with retro reflective sheeting. The sheeting shall be applied to the last five (5) posts at each end of the terminal. The sheeting shall be applied throughout the remainder of the installation at a maximum of 50 feet (50') [15 m]. The sheeting shall be type III or IV retro reflective sheeting meeting the requirements of ASTM standard specifications. The sheeting shall provide at least seven square inches (72") [4500 mm2] when viewed on a line parallel to the roadway centerline. The sheeting shall be attached near the top of the post as recommended by the manufacturer. For median installations, the sheeting shall be applied to both sides of the post. For roadside installations, the sheeting shall be applied only to the side of the post facing traffic. The sheeting shall be yellow or white and shall be the same color as the adjacent edge line.

S-112.3 If the Contractor chooses to install an **SRT-27 Slotted Rail Terminal,** it shall be of the type manufactured by Trinity Highway Products, LLC., Dallas, TX. The Contractor shall contact the manufacturer directly at 800/527-6050 to obtain the steel hinged breakaway (HBA) steel post option detail. Company website is http://highwayguardrail.com.

(A) Use NCHRP-350 approved design with steel posts per manufacturer's recommendations.

(B) The adhesive marker is sold separately from the terminal and shall be incidental to Item 2554.523 (End Treatment - Flared Terminal) for which no direct payment will be made. The SRT-27 requires one 12"x12" adhesive object marker striped yellow and black.

(C) (C) W-Beam Guardrail installations (8338B), including the end treatments, shall be delineated with retro reflective sheeting. The sheeting shall be applied to the last five (5) posts at each end of the terminal. The sheeting shall be applied throughout the remainder of the installation at a maximum of 50 feet (50') [15 m]. The sheeting shall be type III or IV retro reflective sheeting meeting the requirements of ASTM standard specifications. The sheeting shall provide at least seven square inches (72") [4500 mm2] when viewed on a line parallel to the roadway centerline. The sheeting shall be attached near the top of the post as recommended by the manufacturer. For median installations, the sheeting shall be applied to both sides of the post. For roadside installations, the sheeting shall be applied only to the side

of the post facing traffic. The sheeting shall be yellow or white and shall be the same color as the adjacent edge line.

S-112.4 The Contractor is responsible for obtaining the most current details from the manufacturer. The Contractor shall provide one copy for the Engineer.

S-112.5 Install snow plow marker (X4-5) with a 2 lb./ft. delineator post eight feet (8') long (Mn/DOT 3401) driven into ground. Extend post three feet (3') above terminal and six inches (6") adjacent to the head of each terminal or six inches (6") adjacent to the guardrail end. Install marker at the beginning and end of each run. This item shall be incidental to end treatment.

S-113 (2554) INSTALL ENERGY ABSORBING TERMINAL

This work shall consist of installing energy absorbing terminals, salvaged elsewhere under this Contract, in accordance with the applicable 8000 Series Standard Plates, applicable provisions of Mn/DOT 2554, as recommended by the manufacturer, as directed by the Engineer, and the following:

S-113.1 Replacement of a damaged or stolen end treatment and/or the adhesive marker shall be incidental when the damage is attributable to salvage operations or if the damage or theft occurred between salvaging and installing the end treatment. The Contractor is responsible for end treatment storage for the time period between salvage and installation.

S-113.2 The Contractor is responsible for obtaining the applicable details from the manufacturer(s).

S-113.3 MEASUREMENT AND PAYMENT

Measurement will be made by the number of end treatments installed as specified. Payment will be made under Item 2554.602 (Install Energy Absorbing Terminal) at the Contract bid price per each, which shall be payment in full for all costs incidental thereto.

S-114 (2554) INSTALL GUARD RAIL

This work shall consist of installing salvaged guard rail **including furnishing and installing of steel posts** in accordance with the provisions of Mn/DOT 2554 and the following:

S-114.1 The Plate Beam Rail shall consist of the Steel Plate Beam Rail and steel posts as illustrated in the Mn/DOT Standard Plate, Traffic Barrier Design 8338C.

S-114.2 MEASUREMENT AND PAYMENT

Measurement will be made by the length of salvaged guardrail installed as specified. Payment will be made under Item 2554.603 (Install Guard Rail) at the Contract bid price per meter [linear foot], which shall be payment in full for all costs incidental thereto, including but not limited to furnishing and installing the Steel Plate Beam Rail as well as all the necessary hardware.

S-115 (2554) IMPACT ATTENUATOR

This work shall consist of furnishing, installing, and removing Impact Attenuators as shown in the Plan. This work shall be performed in accordance with the applicable MnDOT Standard Specifications and the following:

S-115.1 The Impact Attenuator shall be on the MnDOT Approved Product List for Temporary Crash Attenuators. The list is found on the MnDOT website at http://www.dot.state.mn.us/products. It shall be the responsibility of the Contractor to obtain all required details to install these systems.

S-115.2 The Contractor will be subject to an hourly charge for failure to furnish, install and/or maintain the proper Impact Attenuators required on this Project. Non-compliance charges, for each incident, will be **assessed at a rate of $250.00 per hour**, for each or any portion thereof, which the Engineer determines that the Contractor has not complied.

S-115.3 The Contractor shall choose an Impact Attenuator that fits the site specific requirements for the Project.

S-115.4 Measurement will be made by the number of impact attenuators furnished, installed, and removed as specified. Payment will be made under Item 2554.615 (Impact Attenuator) at the Contract bid price per assembly, which shall be compensation in full for all costs relative thereto.

S-116 (2554) RELOCATE IMPACT ATTENUATOR

This work shall consist of relocating impact attenuator assemblies within the Project site as directed by the Engineer and the following:

S-116.1 Payment will be made for relocating the impact attenuator assemblies under any of the following conditions:

(A) Relocating the assemblies within the Project roadways.
(B) Relocating the assemblies from Project roadway to stockpile for later use on Project roadways.
(C) Relocating the assemblies from stockpile to Project roadways.

S-116.2 MEASUREMENT AND PAYMENT

Measurement will be made on the basis of each separate impact attenuator assembly relocated. Payment will be made under Item 2554.615 (Relocate Impact Attenuator) at the Contract bid price per assembly, which shall be compensation in full for all costs incidental thereto.

S-117 (2557) INSTALL VEHICULAR GATE

This work shall consist of installing an electronic gate salvaged on the project as tabulated on Sheet No. 92 of the Plan.

S-117.1 MEASUREMENT AND PAYMENT

Measurement will be made by the number of vehicular gates installed as specified. Payment will be made under Item 2557.602 (Install Vehicular Gate) at the Contract bid price per each, which shall be compensation in full for all costs relative thereto.

S-118 (2557) FENCING

The provisions of MnDOT 2557 are hereby modified as follows:

S-118.1 Add the following two paragraphs to the end of MnDOT 2557.3 C1:

Fences with a tension wire shall have a flow through (loop) type cap with the tension wire passing through the post cap. A hog ring shall attach the tension wire to the fabric and shall be located 150 mm (**6 inches**) on each side of a post. Additional hog rings shall be spaced 450 mm (**18 inches**) apart.

Wire ties, which attach the fabric to posts, should be spaced evenly with a tie as near to the top and a tie as near to the bottom of the fabric as practical. The number of ties on each post shall equal the height of the fabric in feet.

S-119 (2557) TEMPORARY GLARE SCREEN

This work shall consist of constructing modular units of flexible polyethylene headlight blades to be attached to temporary concrete median barrier in accordance with the applicable Mn/DOT Standard Specifications, and the following:

S-119.1 MATERIALS

The plastic blades and other components shall conform to the requirements shown on current Mn/DOT Standard Plate 8326, or may be any other temporary glare screen acceptable to the Engineer.

S-119.2 CONSTRUCTION REQUIREMENTS

The temporary modular glare screen shall be installed in accordance with the manufacturer's recommendations and the following:

(A) Base plate brackets for the modular units shall be 3 m [10 feet] long and be bolted to the barrier at three locations. The distance between the end of the bracket and the first bolt shall be 150 mm [6 inches]. Bolt holes in the base plate brackets shall be slotted to allow for expansion and contraction. Base plate brackets made of timber will not be allowed.

(B) All blades shall be installed vertical and true to line.

(C) The base plate brackets shall be installed as level as possible, to the satisfaction of the Engineer.

(D) After the plastic blades are installed in their final position (vertical and true to line) the nuts shall be drawn up tight on the washers to prevent any movement of the blades.

(E) Any damage to the concrete median barrier which may be caused by installation of the temporary modular glare screen thereon shall be repaired to the satisfaction of the Engineer, and without direct cost to the County.

(F) Shop drawings of the temporary modular glare screen shall be submitted to the Engineer for approval prior to installation of the glare screen.

(G) Plastic blades or base plate brackets damaged by the Contractor during subsequent handling shall be replaced by the Contractor at no cost to the County.

S-119.3 MEASUREMENT AND PAYMENT

Measurement will be made by the length of median barrier on which temporary glare screen is constructed as specified. Payment will be made under Item 2557.603 (Temporary Glare Screen) at the Contract bid price per meter [linear foot], which shall be compensation in full for all costs incidental thereto.

S-120 (2557) INSTALL CHAIN LINK FENCE

This work shall consist of installing chain link fence salvaged on the project located between the All Cars and Cassidy Industrial properties as identified on Sheet No. 92 of the Plan.

S-120.1 MEASUREMENT AND PAYMENT

Measurement will be made by the length of chain link fence installed as specified. Payment will be made under Item 2557.603 (Install Chain Link Fence) at the Contract bid price per linear foot, which shall be compensation in full for all costs incidental thereto.

S-121 (2557) ORNAMENTAL IRON FENCE

S-121.1 GENERAL

A. Description

The contractor shall provide all labor, materials and appurtenances necessary for installation of the welded and rackable ornamental steel fence system as indicated in the Plans and described herein and in accordance with Mn/DOT 2557.

B. Related Work

Division S– (2411) Gravity Block Retaining Wall

C. Quality Assurance

The contractor shall provide laborers and supervisors who are thoroughly familiar with the type of construction involved and materials and techniques specified.

D. References

1. ASTM A653/A653M - Standard Specification for Steel Sheet, Zinc-Coated (Galvanized) or Zinc-Iron Alloy Coated (Galvannealed) by the Hot-Dip Process.
2. ASTM B117 – Practice for Operating Salt-Spray (Fog) Apparatus.
3. ASTM D523 – Test Method for Specular Gloss. 0020

4. ASTM D714 – Test Method for Evaluating Degree of Blistering in Paint.
5. ASTM D822 – Practice for Conducting Tests on Paint and Related Coatings and Materials using Filtered Open-Flame Carbon-Arc Light and Water Exposure Apparatus.
6. ASTM D1654 – Test Method for Evaluation of Painted or Coated Specimens Subjected to Corrosive Environments.
7. ASTM D2244 – Test Method for Calculation of Color Differences from Instrumentally Measured Color Coordinates.
8. ASTM D2794 – Test Method for Resistance of Organic Coatings to the Effects of Rapid Deformation (Impact).
9. ASTM D3359 – Test Method for Measuring Adhesion by Tape Test.
10. ASTM F2408 – Ornamental Fences Employing Galvanized Steel Tubular Pickets.

E. Submittal

1. Manufacturer's detailed product data literature shall be submitted for approval by the Engineer. The Engineer reserves the right to reject any product that does not meet the specifications herein.
2. Testing data for all materials substantiating compliance with requirements.
3. Structural calculations, certified by a licensed professional engineer, verifying the fence system meets the requirements specified herein.
4. Provide samples 12 inches in length for linear materials.

F. Product Handling And Storage

Upon receipt at the job site, all materials shall be checked to ensure that no damage occurred during shipping or handling. Materials shall be stored in such a manner to ensure proper ventilation and drainage, and to protect against damage, weather, vandalism and theft.

S-121.2 PRODUCTS

A. Manufacturers: Subject to compliance with requirements, available manufacturers offering products that may be incorporated into the Work include, but are not limited to, the following or approved equal:

1. Ameristar Fence Products
2. Fortress Iron, a division of Woodmark International, LP
3. Iron Eagle Industries, Inc.
4. Master Halco
5. Merchants Metals; a division of MMI Products, Inc.
6. Payne Fence Products; a division of Payne Metal Works, Inc.
7. Xcel Fence

B. Material

1. Steel material for fence panels and posts shall conform to the requirements of ASTM A653/A653M, with a minimum yield strength of 45,000 psi (310 MPa) and a minimum zinc (hot-dip galvanized) coating weight of 0.60 oz/ft2 (184 g/m2), Coating Designation G-60.
2. See Plan details for structural member size. Member sizes shall be +/- 1/16" of the size indicated in the Plan details and selected from the manufacturer's standard sizes subject to the strength requirements specified herein.
3. All installation hardware shall be galvanized per Mn/DOT standard specification 3392.
4. Concrete post footing shall be Mn/DOT 2461 Grade B Type 3.

C. Fabrication

1. Pickets, rails and posts shall be pre-cut to specified lengths. Rails shall be pre-punched to accept pickets.
2. Pickets shall be inserted into the pre-punched holes in the rails and shall be aligned to standard spacing using a specially calibrated alignment fixture. The aligned pickets and rails shall be joined at each picket-to-rail intersection by welding, thus completing the rigid panel assembly. Welding process shall produce a virtually seamless appearance, equally attractive from either side of the panel.
3. The manufactured panels and posts shall be subjected to a coating process consisting of a multi-stage pretreatment/wash (with zinc phosphate), followed by a duplex application of an epoxy primer and an acrylic topcoat. The minimum cumulative coating thickness of epoxy and acrylic shall be 2 mils (0.058 mm). The color shall be Black. The coated panels and posts shall be capable of meeting the performance requirements for each quality characteristic shown in Table 1 (Note: The requirements in Table 1 meet or exceed the coating performance criteria of ASTM F2408).

Table 1 – Coating Performance Requirements

Quality Characteristics	ASTM Test Method	Performance Requirements
Adhesion	D3359 – Method B	Adhesion (Retention of Coating) over 90% of test area (Tape and knife test).
Corrosion Resistance	B117, D714 & D1654	Corrosion Resistance over 1,500 hours (Scribed per D1654; failure mode is accumulation of 1/8-inch coating loss from scribe or medium #8 blisters).

Impact Resistance	D2794	Impact Resistance over 60 inch lb. (Forward impact using 0.625" ball).
Weathering Resistance	D822 D2244, D523 (60˚ Method)	Weathering Resistance over 1,000 hours (Failure mode is 60% loss of gloss or color variance of more than 3 delta-E color units).

D. The manufactured fence system shall be capable of meeting the vertical load, horizontal load, and infill performance requirements for Industrial weight fences under ASTM F2408 and meet the requirements of ASCE's Minimum Design Loads for Buildings and Other Structures section 4.4.1 as listed below:

1. All guardrail systems shall be designed to resist a single concentrated load of 200 lb (0.89 kN) applied in any direction at any point along the top and to transfer this load through the supports to the structure.
2. Further, all guardrail systems shall be designed to resist a load of 50 lb/ft (pound-force per linear foot) (0.73 kN/m) applied in any direction at the top and to transfer this load through the supports to the structure. This load need not be assumed to act concurrently with the load specified in the preceding paragraph.
3. Intermediate rails (all those except the handrail), balusters, and panel fillers shall be designed to withstand a horizontally applied normal load of 50 lb (0.22kN) on an area not to exceed 1 ft square (305 mm square) including openings and space between rails. Reactions due to this loading are not required to be superimposed with those of either preceding paragraph.

E. Products

1. Ornamental Fence:
   a. Style: See Plan detail sheet 92
   b. Height: 3 feet-6 inches
   c. Installation: At grade with concrete post footings

S-121.3 EXECUTION

A. Preparation

All new installation shall be laid out by the contractor in accordance with the construction plans and approved by the Engineer before work proceeds.

B. Installation

Fence post shall be spaced according to the details in the plan, plus or minus one-half-inch. For installations that must be raked to follow sloping grades, the post spacing dimension must be measured along the grade. Fence panels shall be attached to posts with brackets supplied by the manufacturer. Posts shall be set in concrete footers as indicated or mounted on

top of cast-in-place concrete wall with a post baseplate as recommended by the manufacturer.

C. Fence Installation Maintenance

When cutting/drilling rails or posts adhere to the following steps to seal the exposed steel surfaces; 1) Remove all metal shavings from cut area. 2) Apply zinc-rich primer to thoroughly cover cut edge and/or drilled hole; let dry; 3) Apply two (2) coats of custom finish paint matching fence color. Failure to seal exposed surfaces per steps 1-3 above will negate warranty. Spray cans or paint pens only from the fence manufacturer shall be used to prime and finish exposed surfaces; it is recommended that paint pens be used to prevent overspray. Use of parts or components from other sources will negate the fence manufactures' warranty.

D. Cleaning

The contractor shall clean the jobsite of excess materials; post-hole excavations shall be scattered uniformly away from posts.

S-121.4 BASIS OF PAYMENT

A. Measurement will be made by the length of fence furnished and installed as specified. Payment will be made under Item 2557.603 "Ornamental Iron Fence," at the contract bid price per linear foot furnished and installed. All hardware, fasteners, concrete footings, and earthwork required shall be provided by the Contractor and considered incidental to the installation.

S-122 (2563) TRAFFIC CONTROL SUPERVISOR

The Contractor shall provide a Traffic Control Supervisor for each day lane closures are used on the Project, in accordance with Contract provisions and as directed by the Engineer.

S-122.1 The Traffic Control Supervisor shall be certified as a worksite supervisor by either the American Traffic Safety Services Association (ATSSA) or by Mn/DOT. The National ATSSA Traffic Control Supervisor Certification will not be accepted as part of the Mn/DOT certification after January 26, 2011.

Mn/DOT certification as a Traffic Control Supervisor can be obtained by providing proof that the individual has completed the National ATSSA Traffic Control Supervisor Course within the last 3 years, and has attended the one-day Mn/DOT Traffic Control Overview Course, and passed a short written recertification exam or by attending a 3-day Mn/DOT Traffic Control Supervisor Course within the last 5 years. Additional information on Mn/DOT's certification can be obtained by contacting Leigh Kriewall at 651/ 366-4248 or website: http://www.dot.state.mn.us/trafficeng/education/index.html.

S-122.2 A copy of the traffic control supervisor's certification shall be provided to the Engineer at the Project pre-construction conference.

(A) The Contractor shall, at the pre-construction conference, designate a Traffic Control Supervisor who shall be responsible for and perform the traffic control management. The Traffic Control Supervisor shall be either an employee of the Contractor other than the superintendent, or an employee of a firm which has a

subcontract for overall traffic control management for the Project. The Traffic Control Supervisor shall be responsible for the management of the traffic control operations of the Project, including those of the Contractor, subcontractors and suppliers. The primary responsibility of the Traffic Control Supervisor shall be the Traffic Control Management of this Project.

(B) The Traffic Control Supervisor shall have the authority needed to effectively require modifications and maintenance of traffic controls. This includes having the authority necessary to obtain and use all labor, equipment, and materials needed to provide and maintain traffic control in routine and in emergency situations.

(C) The Traffic Control Supervisor shall have an up-to-date copy of the Part VI of the MN MUTCD (Minnesota Manual on Uniform Traffic Control Devices), including the "Field Manual for Temporary Traffic Control Zone Layouts," and "A Guide to Establishing Speed Limits in Highway Work Zones".

S-122.3 Traffic control management by the Traffic Control Supervisor includes, but is not limited to:

(1) Ensuring that traffic control devices are functioning as required. This includes the repair or replacement of all signs, barricades, and other traffic devices that become damaged, moved, or destroyed, or lights that cease to function properly, and barricade weights that are damaged or otherwise fail to stabilize barricades.

(2) Providing sufficient surveillance of signs, barricades, and other traffic control devices. This includes inspecting traffic control devices on every calendar day that traffic control devices are in use (by the Traffic Control Supervisor or his approved representative). Routine surveillance reports shall be submitted to the Project Engineer weekly.

(3) The Traffic Control Supervisor will be on the Project full time every working day, "on call" at all times, and available within 45 minutes of notification, at other than normal working hours. The Contractor shall give to the Engineer, the names, addresses and phone numbers of at least three individuals (one of which is the Traffic Control Supervisor) responsible to provide and ensure immediate attention to the traffic control management.

(4) Preparing, revising, and submitting the traffic control plan as required.

(5) Directing supervision of Project flag persons.

(6) Coordinating all traffic control operations, including those of subcontractors and suppliers.

(7) Coordinating Project activities with appropriate police and fire control agencies.

(8) Maintaining a Project traffic control diary which shall become a part of the department's Project records.

(9) Overseeing all requirements covered by the Plans and specifications which contribute to the convenience, safety and orderly movement of traffic.

(10) Establishing contact with local and state law enforcement agencies affected by construction before work begins. Establish communications so that any accidents will be reviewed daily by the Traffic Control Supervisor to determine if a

change in traffic control is necessary. These accidents will also be reported daily to the Engineer. A written weekly and final report will be required. The report shall include, but not be limited to: type of accident, time, weather, and possible cause if known.

(11) Providing sufficient surveillance of all Portable Changeable Message (PCM) signs to ensure the following:

(a) Correct and current information is always provided.

(b) Proper placement of PCM signs.

(c) PCM signs are turned off when messages are no longer necessary.

(12) Ensuring that work zone speed limits are properly installed. As part of this responsibility, the Traffic Control Supervisor shall complete the "Work Zone Speed Limit Application" form daily when these speed limits are in use. These forms shall be turned in to the Engineer each week.

(13) Maintaining constant communications with Project personnel, law enforcement agencies, and the Traffic Management Center. As part of this requirement, the Traffic Control Supervisor will be required to have a cellular phone.

S-122.4 Traffic control management shall be provided by the Contractor. **For any period of time the Traffic Control Supervisor is not available to provide traffic control management the Contractor will be subject to an hourly charge assessed at a rate of $250.00 per hour for each hour or any portion thereof which the Engineer determines that the Contractor has not complied.**

S-122.5 No measurement will be made of the various duties of the Traffic Control Supervisor, but all such work shall be construed to be included in the lump sum payment under Item 2563.601 (Traffic Control Supervisor). The lump sum payment shall be compensation for all costs incidental thereto.

S-123 (2563) TEMPORARY PEDESTRIAN ACCESS CONTROL

This work shall consist of providing Temporary Access Control Plan. This plan shall consist of identifying a Temporary Pedestrian Accessible Route (TPAR) and features needed to assist pedestrian, bicyclists and non-motorized vehicles safe movement within and around the construction zone. This work shall be done in accordance with Contract provisions and the following:

S-123.1 The Contractor shall develop and provide for a continuous Temporary Pedestrian Accessible Route (TPAR) for this Project. The TPAR shall clearly address all non-motorized users in the construction zone. The Contractor shall submit this plan to the Engineer for acceptance at the pre-construction meeting.

S-123.2 PEDESTRIAN ACCESS

(A) The TPAR must have a minimum width of 48 inches (4 feet) and guide pedestrians through and/or around the Project by using devices such as signage, barricades, and temporary curb ramps or blended transitions. The Contractor may provide an alternate route that is accessible and within 3 blocks of the closed construction area. To the maximum extent feasible, the TPAR shall be provided on the same side of the street as

the disrupted route. Where the TPAR is exposed to adjacent construction, excavation drop-offs, traffic, or other hazards, it shall be protected with a pedestrian barricade or channelizing device. All TPARs must have a smooth, level, slip-resistant surface and shall meet the applicable requirements of the Public Right-of-Way Accessibility Guidelines (PROWAG).

(B) The Contractor shall schedule and coordinate the replacement of the pedestrian access to accommodate the needs of the business and residences. Existing sidewalks shall be left in-place until such time that it is required to remove them to accommodate new construction. Pedestrian access may be provided to businesses and homes through the use of any public access from adjacent parking lots and side streets. Front door access must be provided to buildings without alternate public entrances. Where disrupted by construction, the Contractor must provide a continuous TPAR for all areas disrupted construction throughout all phases of construction.

(C) For technical provisions on TPAR, the Contractor is directed to the Guidelines for Accessible Public Rights-of-Way at: http://www.access-board.gov/prowac/draft.htm and Chapter 6D of the MN MUTCD. The pedestrian accessibility checklist is on page 6D-5 and 6D-6 of the MN MUTCD. The Contractor shall complete MN MUTCD Fig. 6D-1, "Pedestrian Accessibility Considerations in Temporary Traffic Control Zones Check List". A copy shall be provided to the Engineer at the pre-construction meeting.

(D) The Contractor shall notify the Engineer in writing at least 72 hours prior to the start of any construction operation that will necessitate a change in pedestrian access.

S-123.3 Traffic control devices must allow for an accessible route through the Project. TPAR pedestrian barricades and channelizing devices shall be continuous, stable, and non-flexible and shall consist of a wall, fence, or enclosures. The base of any traffic control devices shall be a continuous raised barrier of no more than 6 inches in height and must allow for drainage. The purpose of this barrier is to provide a continuous wayfinding device for the visually impaired, therefore the barrier shall not have any points that might catch a person who is using a cane for a guide. The Devices shall provide a continuous surface or upper rail at a minimum 3 feet above the ground or walkway surface. Support members shall not protrude into the path. Whenever possible the TPAR shall only utilize in-place street crossings. TPAR must be regularly inspected and updated depending on Project staging.

S-123.4 No pedestrian curb ramp or blended transition work shall occur concurrently at adjacent intersections.

S-123.5 The Contractor shall be responsible for maintaining the TPAR within this Project. The Contractor shall furnish the name, addresses, and phone number of at least one individual responsible for the placement and maintenance of TPAR. This individual shall be "on call" 24 hours per day, seven days per week during the times any devices, furnished and installed by the Contractor, are in place. The required information shall be submitted to the Engineer at the pre-construction meeting.

The Contractor shall be expected to answer calls immediately and begin corrective measures needed within one hour. **If the Contractor is negligent in correcting the deficiency within one hour of notification the Contractor shall be subject to a monetary deduction at the rate of $100.00 per hour when only one residence or**

location is affected and at the rate of $500.000 per hour in all other cases that the Engineer determines the Contractor has not complied.

S-123.6 No measurement will be made of the various items that constitute Temporary Pedestrian Access Control, but all such work shall be construed to be included in the lump sum payment under Item 2563.601 (Temporary Pedestrian Access Control). The lump sum payment shall be compensation in full for all costs of furnishing, installing, maintaining and removing the individual devices.

S-124 (2563) RAISED PAVEMENT MARKERS TEMPORARY (TRPMS)

This work shall consist of constructing temporary raised pavement markers and the selected mounting system, placing the marker on the roadway, and removing the marker in accordance with the specification TEMPORARY RAISED PAVEMENT MARKERS (TRPM) and the following:

S-124.1 The specification TEMPORARY RAISED PAVEMENT MARKERS (TRPM) can be accessed on the Mn/DOT Office of Traffic, Security, and Operation website.

S-124.2 TRPMs will be measured by the number of markers installed. Payment will be made under Item 2563.602 (Raised Pavement Marker Temporary) at the Contract bid price per each.

S-125 (2563) MEDIAN BARRIER DELINEATOR

This work shall consist of furnishing, installing and maintaining barrier delineators on median barriers in accordance with the provisions of Mn/DOT 2564, the details shown in the Plans, and the following:

S-125.1 The reflectors shall be 200 X 114 mm [7-7/8 X 4-1/2 inch] in size or an approved equal, or a substitute barrier at a closer spacing, as directed by the Engineer. The approved barrier reflectors can be found at: http://www.dot.state.mn.us/products/signing/delineation.html.

S-125.2 Measurement will be made by the number of barrier delineators furnished and installed as specified. Payment will be made under Item 2563.602 (Median Barrier Delineator) at the Contract bid price per each, which shall be payment in full for all costs involved.

S-126 (2563) PORTABLE CHANGEABLE MESSAGE SIGN

The Contractor shall furnish, install, maintain and remove Portable Changeable Message Signs in accordance with Contract provisions, as directed by the Engineer and the following:

S-126.1 The Portable Changeable Message Signs shall be trailer mounted three line, DOT signs with eight characters per line with a character height of 450 mm [18 inches] as approved by the Engineer.

S-126.2 (PCMS) Type C Trailer Mounted Message Signs will be permitted and shall be on the qualified products list for portable changeable message signs as found at: http://www.dot.state.mn.us/trafficeng/qpl/workzone.pdf. It is imperative that the Contractor continually operate each PCMS at maximum legibility. Many factors, such as mechanical problems, insufficient charging, incorrect intensity settings, or other

factors can degrade performance. If at any time the Contractor fails to operate a Portable Changeable Message Sign at maximum legibility, as determined by the Engineer, no payment will be made for each day that the Message Sign is deemed inadequate.

S-126.3 The changeable message signs shall be in operation within 24 hours after notification by the Engineer and removed within 24 hours after notification by the Engineer. Multiple mobilizations of the changeable message signs will be required and shall be incidental to providing the signs. The changeable message signs shall be subject to approval of the Engineer. All maintenance and repair as required will be considered incidental to the Contract price for the respective item.

S-126.4 Except as approved by the Engineer, the message sign shall be stored off the shoulder when not in use. In the event the Engineer allows the message board to remain on the shoulder the message sign shall be delineated according to Layout 4 (Partial Shoulder Closure) in the field manual, as determined by the Engineer.

S-126.5 **The Contractor is to provide two (2) Portable Changeable Message Signs at the beginning of the project to be used at the discretion of the Engineer. No direct compensation will be made to the Contractor for furnishing and erecting the first two (2) Portable Changeable Message Signs. Additional Portable Changeable Message Signs may be needed for the project as the work progresses.**

S-126.6 Measurement will be made by the number of Portable Changeable Message Signs (beyond the first two devices provided) furnished and installed per day of service (Unit Day) as specified.

S-126.7 Payment for Portable Changeable Message Signs furnished and installed, as directed by the Engineer, will be made under Item 2563.613 (Portable Changeable Message Sign) at the Contract bid price per Unit Day, which shall be compensation in full for all costs incidental thereto, including but not limited to furnishing and installing the signs with appropriate message, maintaining the signs, revising the messages as directed by the Engineer, and removing the signs at the direction of the Engineer. The Portable Changeable Message Signs shall remain the property of the Contractor.

S-127 (2572) PROTECTION AND RESTORATION OF VEGETATION

The provisions of Mn/DOT 2572 are supplemented and/or modified with the following:

S-127.1 The first paragraph after Mn/DOT 2572.3A(5) under Protecting and Preserving, is revised to read as follows:

The Contractor shall not place temporary structure, store material, or conduct unnecessary construction activities with in a distance of 8 m **(26 feet)** outside the dripline of trees designated to be preserved without approval from the Engineer.

S-127.2 The second paragraph of Mn/DOT 2572.3A2 Clean Root Cutting, is revised to read as follows:

The Contractor shall immediately and cleanly cut damaged and exposed roots. Trees designated for protection shall have damaged roots cut back to sound healthy tissue and shall have topsoil immediately placed over the exposed roots. The Contractor shall immediately cover root ends that are exposed by excavation activities with 150 mm **(6**

inches) of topsoil as measured outward from the cut root ends. Exposed cut oak roots shall be immediately (within 5 minutes) treated with a wound dressing material consisting of latex paint or shellac. The Contractor shall limit cutting to a minimum depth necessary for construction and shall use a vibratory plow or other approved root cutter prior to excavation.

S-127.3 The third sentence of Mn/DOT 2572.3A8 Destroyed or Disfigured Vegetation, is revised to read as follows:

The Engineer will assess damages of trees and landscaping at not less than the appraisal damages as determined by the current edition of the "Guide for Plant Appraisal – Council of Tree and Landscape Appraisers" published by the International Society of Arboriculture.

S-128 (2573) STORM WATER MANAGEMENT

The provisions of Mn/DOT 2573 are supplemented and/or modified with the following:

S-128.1 The second paragraph of Mn/DOT 2573.3A1 Erosion Control Supervisor, is revised to read as follows:

The Erosion Control Supervisor shall be a responsible employee of the prime Contractor and/or duly authorized by the prime Contractor to represent the prime Contractor on all matters pertaining to the NPDES construction stormwater permit compliance. The Erosion Control Supervisor shall have authority over all Contractor operations which influence NPDES permit compliance including grading, excavation, bridge construction, culvert installation, utility work, clearing/grubbing, and any other operation that increases the erosion potential on the Project. In addition, the Erosion Control Supervisor shall **implement the Contractor's quality control program and other provisions in accordance with 1717.2 and** be available to be on the Project within 24 hours at all times from initial disturbance to final stabilization as well as perform the following duties:

S-128.2 Mn/DOT 2573.3 A2, Construction of Temporary Storm Water Basins, is revised to read as follows:

Temporary storm water basins shall be constructed concurrently with the start of soil disturbing activities whenever practicable. The basins must be made fully functional and have storm water runoff from the localized watershed directed to the basins. The exposed sideslopes of the basins must be mulched and/or seeded within the time periods as set forth in 1717, or as directed by the Engineer.

S-128.3 The second paragraph of Mn/DOT 2573.3 A5, Vehicle Tracking Onto Paved Surfaces, is revised to read as follows:

The Contractor is responsible for insuring paved streets are clean at the end of each working day or more often as necessary to provide safety to the traveling public. Tracked sediment on paved surfaces must be removed by the Contractor within 24 hours of discovery, in accordance with 1717.2. Payment for street sweeping to provide safe conditions for the traveling public, environmental reasons or regulatory requirements shall be as provided in accordance with 1514.

S-128.4 The first sentence of Mn/DOT 2573.3E2 is revised to read as follows:

The bioroll shall be installed and anchored with wood stakes. The stakes shall be at a minimum nominally 25 mm x 50 mm **(1 inch x 2 inch)** and a minimum of 400 mm **(16 inches)** long with a pointed end.

S-128.5 The first paragraph of Mn/DOT 2573.3J Filter Log Installation, is revised to read as follows:

J Filter Log Installation

Filter logs shall be placed in accordance with the Plan. Straw and wood fiber filter logs shall be staked in place with wood stakes. Wood stakes shall be at a minimum 25 x 51 mm (**1 x 2 inch**) nominal size by 400 mm (**16 inches**) long. The stakes shall be driven through the back half of the log at an angle of approximately 45 degrees with the top of the stake pointing upstream. When more than one log is needed for length, the ends shall be overlapped 150 mm **(6 inches)** with both ends staked. Staking shall be every 0.3 m **(1 foot)** along the log unless precluded by paved surface or rock.

S-128.6 Mn/DOT 2573.5 Basis of Payment, is revised to read as follows:

Payment for storm water management and sediment control items will be compensation in full for all labor, materials, equipment, and other incidentals necessary to complete the work as specified, including the costs of maintenance and removal as required by the Contract. The Contractor will receive compensation at the appropriate Contract prices, or in the absence of a Contract bid price, according to the following unit prices, or in the absence of a Contract price and unit price, as Extra Work. In the absence of a Contract item for Erosion Control Supervisor, this work shall be considered incidental.

S-128.7 Mn/DOT 2573.5 E, Unit Prices, is revised to read as follows:

The County will pay the following unit prices for temporary sediment control items in the absence of a Contract bid price:

(1)	Bale Barrier	$13.45/m (**$4.10 per linear foot)**
(2)	Silt Fence, Heavy Duty	$10/m (**$3.00 per linear foot**)
(3)	Flotation Silt Curtain, Type: Still Water, 1.2 m (**4 foot**) depth	$54.10/m (**$16.50 per linear foot**)
(4)	Sediment Trap Excavation	$7.20/m^3 (**$5.50 per cubic yard**)
(5)	Bituminous Lined Flume	$6.00/m^2 (**$5.00 per square yard**)
(6)	Silt Fence, Type Machine Sliced	$6.50/m ($**2.00 per linear foot**)
(7)	Sediment Removal, Backhoe	$175 per hour
(8)	Filter Log, Type Straw Bioroll	$1.00/m (**$3.00/foot**)
(9)	Filter Log, Type Rock Log	$16.50/m (**$5.00/foot**)
(10)	Flocculant Sock	$300 each

S-129 (2573) STORM DRAIN INLET PROTECTION

This work shall consist of furnishing, installing, maintaining and removing inlet erosion control devices according to the provisions of Mn/DOT 2573, the Plans, and the following:

S-129.1 Storm drain inlet protection shall consist of the best management practices and devices for preventing sedimentation from entering the underground drainage systems. Storm drain inlet protection applies to manholes, catch basins, curb inlets, and other drop type inlets constructed for the ingress of surface water runoff into underground drainage

systems. Storm drain inlet protection as described in this Special Provision does not include practices to protect culverts. The Contractor shall install the inlet protection according to the manufacturer's instructions.

S-129.2 The Contractor must protect all storm drain inlets with sediment capture devices prior to soil disturbing activities that may result in sediment laden storm water runoff entering the inlet. The Contractor shall provide effective storm drain inlet protection over the life of the Contract until all surfaces with potential for discharging sediment to an inlet have been paved or stabilized. As the Contractor's operations change, the storm drain inlet Best Management Practice for sediment control must be modified by the Contractor to ensure proper effectiveness for sediment capture.

S-129.3 The Contractor is responsible for preventing or minimizing the potential for unsafe conditions, flooding, or siltation problems. For example, devices must be regularly cleaned out and emergency overflow must be an integral part of the device to reduce the flooding potential; and devices must be placed such that driving hazards or obstructions are not created.

S-129.4 The Contractor shall clean, remove sediment, or replace storm drain inlet protection devices on a routine basis such that the devices are fully functional for the next rainstorm event. Removal and disposal of trapped sediment in inlet protection devices shall be incidental to the Project. Sediment deposited in and/or plugging drainage systems is the responsibility of the Contractor and shall be removed at no expense to the Department.

S-129.5 MEASUREMENT AND PAYMENT

Measurement will be made by the number of individual inlets protected over the life of the Contract and as indicated on the Plan. Payment will be made in accordance with the following schedule:

Item No.	**Item**	**Unit**
2573.530	Storm Drain Inlet Protection	Each

Storm Drain Inlet Protection will be paid for in partial payment amounts for satisfactory completion of the following work.

Initial Installation: 25% payment

Maintenance during first half of Contract period: 25% payment

Maintenance during last half of Contract period and removal of the devices: 50% payment

S-129.6 DEDUCTIONS FOR FAILURE TO PERFORM

If the Contractor fails to properly install, remove sediment, or maintain storm drain inlet protection, **the Contractor will be subject to the daily charge of $1,000 per calendar day as set forth in Section 1807 (FAILURE TO COMPLETE THE WORK ON TIME).** The deduction will apply to each inlet that is out of compliance and will be deducted from any monies owed to the Contractor.

This work consists of furnishing, installing, maintaining, and removing temporary rock construction entrances as required by permit or as directed by the Engineer, with the

purpose of reducing the amount of solid tracked by construction vehicles from the site to surfaces outside the site where runoff can carry the solids to stormwater discharge. Temporary rock construction entrances shall be constructed in the locations directed by the Engineer in accordance with the detail in the plan, the applicable Mn/DOT Standard Specifications and the following:

S-129.7 MATERIALS

a) Rock, Class 1 Crushed Rock, Mn/DOT 3138.

b) Type V Permeable Geotextile Fabric, Mn/DOT 3733.

S-129.8 CONSTRUCTION REQUIREMENTS

See the Standard Plan Sheet for "Rock Construction Entrance", included in the Construction Plan except as modified:

a) The minimum rock depth shall be 8 inches.

b) Geotextile fabric shall be used under the rock to prevent migration of under lying soil into the rock.

This work shall consist of installing a temporary rock construction entrance and exit for trucks entering and exiting the Project. The temporary rock construction entrances shall be constructed as shown in the Construction Plans, and as directed by the Engineer. The work shall be accomplished according to Mn/DOT 2573, these Special Provisions, or as directed by the Engineer.

No temporary rock construction entrance shall be removed until so authorized by the Engineer.

S-129.9 MEASUREMENT AND PAYMENT

All Rock Entrances provided be considered incidental as per the Storm Water Pollution Prevention Narrative, Item No. 11 located on Sheet No. 429 of the Plan.

S-130 (2575) CONTROLLING EROSION AND ESTABLISHING VEGETATION

The provisions of Mn/DOT 2575 are hereby modified and/or supplemented with the following:

S-130.1 Mn/DOT 2575.3D paragraph 2 and table 2575-2 are hereby deleted and replaced with the following:

The Contractor shall sow the seed uniformly at the rate of application specified in Table 3876-5.

S-130.2 Mn/DOT 2575.4D is hereby deleted and replaced with the following:

D Seed

When a bulk rate seed mixture is specified as shown in table 3876-5, the measurement will be made on that bulk mass. When a PLS rate seed mixture is specified as shown in table 3876-5, the measurement will be made on the PLS mass.

S-130.3 Mn/DOT 2575.5C is hereby deleted and replaced with the following:

C Seed

When a seed mixture is specified at a bulk rate as shown in table 3876-5, the payment will be made on that bulk mass. When a seed mixture is specified at a PLS rate as shown in table 3876-5, the payment will be made on the PLS mass.

Payment for seed not meeting germination and purity or PLS requirements of 3876 shall be subject to 1503. When components are missing from the specified mixture the affected seeded areas shall be reseeded with the missing components by the Contractor at no additional cost to the Department.

S-131 (2575) RAPID STABILIZATION SPECIFICATIONS

This work shall consist of operations necessary to rapidly stabilize small critical areas, to prevent off site sedimentation and/or to comply with permit requirements. The work may be performed at any time during the Contract and will be conducted on small areas that may or may not be accessible with normal equipment. This work shall be done in accordance with the applicable Mn/DOT Standard Specifications, the details shown in the Plan, and the following:

S-131.1 BASIS OF PAYMENT

In the absence of a Contract bid price, the Department will pay the following unit prices for Rapidly Stabilizing Small Scattered Critical Areas directly abutting Waters of the State during rough grading and as required in the NPDES permit. These unit prices shall be construed to include mobilizations for this activity.

Rapid Stabilization	Pre-Approve Prices	
Method 1	$900/ha **($400/acre)**	Approved price reflects small quantities. Quantities installed per Project visit are assumed to require approximately 0.4 to 0.8 ha **[1 to 2 acres]** of coverage.
Method 2	$2220/ha **($898/acre)**	Approved price reflects small quantities. Quantities installed per Project visit are assumed to require approximately 0.4 to 0.8 ha **[1 to 2 acres]** of coverage.
Method 3	$149.50/m^3 **($566/M gallon)**	Approved price reflects small quantities. Quantities installed per Project visit are assumed to require approximately 11.4 to 34 m^3 **[3000 to 9000 gallons]** of product slurry.
Method 4	$3.00/m^2 **($2.50/SY)**	Approved price reflects small quantities. Quantities installed per Project visit are assumed to require approximately 150 to 650 m^2 **[200 to 800 SY]** of coverage.
Method 5	$48.60/metric ton **($45/ton)**	Approved price reflects small quantities. Quantities installed per Project visit are assumed to require approximately 9 to 18 metric tons **[10 to 20 tons]** of riprap.

S-132 (2580) INTERIM PAVEMENT MARKING

This work shall consist of placing interim pavement markings on those pavements, prior to opening them to traffic, where the inplace surface is to be covered by a subsequent paving course or the permanent lane markings are to be placed at a future date. The Contractor has the option of furnishing the following material, unless the material type is indicated in the Plan:

(A) Removable Preformed Plastic Pavement Marking (100 mm [**4 inch**] wide) Tape Mn/DOT 3355.

(B) Traffic Marking Paint in accordance with Mn/DOT 3591 and 3592, and the following specifications:

- THREE MINUTE DRY ALKYD TRAFFIC PAINTS
- APPLICATION SPECIFICATION FOR CONVENTIONAL TRAFFIC MARKING PAINT

The above specifications can be accessed on the Mn/DOT Office of Traffic, Safety, and Operation website.

(C) Temporary Raised Pavement Markers in accordance with the following specification:

- TEMPORARY RAISED PAVEMENT MARKERS (TRPMs)

The above specifications can be accessed on the Mn/DOT Office of Traffic, Safety, and Operation website.

S-132.1 When centerline or lane markings (excluding edge lines) are removed, interim pavement markings shall be provided prior to opening the roadway to traffic. The markings shall be applied to a clean, dry surface in accordance with the manufacturer's recommendation or as approved by the Engineer.

S-132.2 The Contractor will be required to use primer prior to the installation of all tape regardless of weather or pavement conditions or Manufacturer’s specifications. All other installation procedures and materials used shall follow the manufacturer’s specifications. Application of the primer shall be incidental to the cost of installing the tape.

S-132.3 The Contractor shall place all centerline and lane markings prior to ending work each day. Edge lines shall be placed within 14 calendar days.

S-132.4 Interim markings shall consist of center line markings including no passing zone markings, center lines and lane lines (excluding edge lines) in accordance with the Minnesota Manual on Uniform Traffic Control Devices (MN MUTCD). Interim markings for skip stripes shall be 100 mm [4 inch] wide plus or minus 6 mm [1/4 inch] and cycle lengths as indicated in the Plan. The Markings shall be placed parallel to the direction of traffic flow. Solid lines used to make no passing zones and lanes shall be 100 mm [4 inch] in width, plus or minus 6 mm [1/4 inch]. Lateral placement of the markings from centerline shall be as directed by the Engineer.

If the Contractor is negligent in adhering to the above provisions, he/she shall be subject to an hourly charge assessed at a rate of $250.00 per hour for each hour or any portion thereof which the Engineer determines that the Contractor has not complied.

S-132.5 When temporary raised pavement markings are used as interim markings, they shall be installed as per the TRPM specification or as indicated in the Plan. Removal of TRPM's shall be incidental to the bid price.

S-132.6 The interim markings shall be maintained and replaced by the Contractor without additional compensation until they are covered by the next paving course, are replaced with permanent pavement markings, or final acceptance of the Project is made. The Contractor will be required to remove all Temporary Raised Pavement Markings used as Interim Pavement markings. Any solid line delineations on the final pavement surface marked with Pavement Marking Tape must also be removed prior to placing the Permanent Pavement markings. The Engineer may require the removal of any Interim Pavement Markings that will interfere with the placement of the permanent markings or could cause confusion to the traveling public if left in place. Removal of interim pavement Markings, if required, shall be incidental to the Contract bid price for the Item, and shall be in accordance with Mn/DOT 2102.

S-132.7 No measurement will be made of any individual pavement markings placed, maintained and removed but all such work will be construed to be included in the single Lump Sum payment under Item 2580.601 (Interim Pavement Marking). Payment shall be compensation in full for all costs of furnishing, placing, maintaining and removing the pavement markings as required.

S-133 (2581) REMOVABLE PREFORMED PLASTIC MASK (BLACK)

This work shall consist of furnishing, placing and removing temporary pavement marking material over inplace pavement markings when traffic control must be temporarily changed. This work shall be in accordance with the provisions of MnDOT 2581, as modified below. The removable preformed plastic pavement marking material shall conform to the requirements of MnDOT 3355.

S-133.1 The 2nd paragraph of MnDOT 2581.4 is changed to read as follows:

The measurement is based on a 150 mm [6 inch] wide marking tape. Broken line marking will be measured by the actual length of material used and will not include the gap between the broken lines.

S-133.2 Measurement will be made by the length in meters [linear feet].

S-133.3 Payment for pavement markings of each type will be made in accordance with the schedule set forth below at the appropriate Contract bid price for the specified unit of measure. Such payment, in each instance, shall be compensation for all costs of furnishing, placing, maintaining, replacing, and removing the Marking.

ITEM NO.	DESCRIPTION	UNIT
2581.603	Removable Preformed Plastic Mask (Black)	meter [**linear foot**]

S-134 (2582) PERMANENT PAVEMENT MARKINGS

The provisions of Mn/DOT 2582 are hereby modified and/or supplemented with the following:

S-134.1 The provisions of Mn/DOT 2582.2 are hereby deleted and replaced with the following:

A Preformed Plastic Markings for Permanent Traffic Lane Delineation

and Legends.....3354

B Epoxy Resin Pavement Markings (Free of Toxic Heavy Metals) 3590

C High Solids Water-Based Traffic Paint 3591

D Drop-On Glass Beads 3592

Qualified materials can be found on Mn/DOT's Qualified Products List on the Office of Traffic, Safety and Operations website. Other materials may be used on a provisional basis as detailed in the QPL process and as approved by the Engineer. Type of material used will be as specified by Contract Documents.

S-134.2 Mn/DOT 2582.3A2 is hereby deleted.

S-134.3 Mn/DOT 2582.3G is hereby deleted and replaced with the following:

Contractors applying pavement markings for Mn/DOT under a contract **are required** to fill out the "Construction Striper Operations Daily Log" form which can be found on the Office of Traffic, Safety and Technology website and as approved by the Engineer.

S-134.4 The provisions of Mn/DOT 2582.5 are hereby deleted and replaced with the following:

2582.5 BASIS OF PAYMENT

Payment for pavement markings installed at Contract prices per unit of material shall be compensation in full for all costs incurred in materials, traffic control, installation, surface preparation, use of primers, in accordance to Contract documents or as approved by the Engineer.

ITEM NO.	ITEM	UNIT
2582.501	Pavement Message (1) (2).....	Each
2582.502	__ mm (__inch) width (3) (4) (2)	meter (**linear foot**)
2582.503	Crosswalk Marking - (2)	square meter (**square foot**)

(1) Specify Message

(2) Specify Material

(3) Specified Type of Line (Solid, Broken or Dotted)

(4) Specify Color

S-135 (2582) PERMANENT PAVEMENT MARKINGS (POLY PREFORMED)

The provisions of Mn/DOT 2582 are hereby modified and/or supplemented with the following:

S-135.1 The language below applies to permanent pavement markings for this Project that utilize Poly Pref.

S-135.2 The pavement marking material utilized for this Project must be listed within Tape System-Permanent category on the Mn/DOT Approved/Qualified Products Lists.

S-135.3 The provisions of Mn/DOT 2582.2 are hereby deleted and replaced with the following:

A Preformed Plastic Markings for Permanent Traffic Lane Delineation and legends 3354

Qualified materials can be found on Mn/DOT's Qualified Products List (QPL) on the Office of Traffic, Safety and Technology website. The Pavement Marking Materials QPL can be found at http://www.dot.state.mn.us/products/pavementmarkings/pmmaterials.html. Other materials may be used on a provisional basis as detailed in the QPL process and as approved by the Engineer. Type of material used will be as specified by Contract Documents.

S-135.4 The provisions of Mn/DOT 2582.3A2 are hereby deleted and replaced with the following:

Training of a striping Contractor – To assure the proper installation of pavement markings, the Contractor's crew shall obtain manufacturer certification. Certification is typically achieved by attending an application training seminar. The training shall address surface preparation and all application requirements and techniques necessary for successful marking tape applications. Upon completion of the seminar for these personnel, the manufacturer of the marking tape shall provide written certification of approval to each person approved. On-site Contractor personnel shall present a valid training certification card upon request of the Engineer or other County project personnel.

S-135.5 Mn/DOT 2582.3G is hereby deleted and replaced with the following:

Contractors applying pavement markings under this contract **are required** to fill out the "Construction Striper Operations Daily Log" form which can be found on the Office of Traffic, Safety and Technology website and as approved by the Engineer.

S-135.6 The provisions of Mn/DOT 2582.5 are hereby deleted and replaced with the following:

2582.5 BASIS OF PAYMENT

Payment for pavement markings installed at Contract prices per unit of material shall be compensation in full for all costs incurred in materials, traffic control, installation, surface preparation, use of primers, in accordance to Contract documents or as approved by the Engineer.

ITEM NO.	ITEM	UNIT
2582.501	Pavement Message (1) Poly Preform	Each
2582.502	__ mm (__inch) width (2) (3) – Poly Preformmeter	(**linear foot**)
2582.503	Crosswalk Marking – Poly Preformsquare meter	(**square foot**)
	(1) Specify Message	
	(2) Specified Type of Line (Solid, Broken or Dotted)	
	(3) Specify Color	

S-136 (2582) PERMANENT PAVEMENT MARKINGS (POLY PREFORMED GROUND IN)

The provisions of Mn/DOT 2582 are hereby modified and/or supplemented with the following:

S-136.1 The language below applies to permanent pavement markings for this Project that are to be recessed pavement markings, utilizing Poly Pref (GR IN).

S-136.2 The pavement marking material utilized for this Project must be listed within Tape System-Permanent category on the Mn/DOT Approved/Qualified Products Lists.

S-136.3 The provisions of Mn/DOT 2582.2 are hereby deleted and replaced with the following:

A Preformed Plastic Markings for Permanent Traffic Lane Delineation and legends 3354

Qualified materials can be found on Mn/DOT's Qualified Products List (QPL) on the Office of Traffic, Safety and Technology website. The Pavement Marking Materials QPL can be found at http://www.dot.state.mn.us/products/pavementmarkings/pmmaterials.html. Other materials may be used on a provisional basis as detailed in the QPL process and as approved by the Engineer. Type of material used will be as specified by Contract Documents.

S-136.4 The provisions of Mn/DOT 2582.3A2 are hereby deleted and replaced with the following:

Training of a striping Contractor – To assure the proper installation of pavement markings, the Contractor's crew shall obtain manufacturer certification. Certification is typically achieved by attending an application training seminar. The training shall address surface preparation and all application requirements and techniques necessary for successful marking tape applications. Upon completion of the seminar for these personnel, the manufacturer of the marking tape shall provide written certification of approval to each person approved. On-site Contractor personnel shall present a valid training certification card upon request of the Engineer or other County Project personnel.

S-136.5 GROOVING BITUMINOUS *and/or* CONCRETE PAVEMENT SURFACES FOR POLYMER PREFORMED TAPE PAVEMENT MARKINGS

The polymer preformed tape pavement markings are to be grooved into the pavement surfaces. **GRINDER-TYPE CUTTING HEADS CANNOT BE USED.** The goal of the grooving process is to protect the pavement marking from snowplow damage and ultimately extend the service life of the pavement markings. Grooving operations are incidental to permanent pavement marking operations.

S-136.6 The following is hereby added to Mn/DOT 2582.3B, Application:

The Contractor has the option to dry or wet groove the pavement while the roadway is open or closed to traffic. The grove must be cleaned completely prior to pavement marking application, using an air compressor with at least 185 CFM air flow and 120 PSI air pressure. The compressor must be equipped with a moisture and oil trap, and cannot have more than 50 feet of 3/4 inch ID hose between the compressor and the air nozzle. The air nozzle must have an inside diameter of 1/2 inch or greater.

(A) Grooving Equipment

The grooving shall be performed by a self-propelled machine equipped with gang stacked diamond cutting blades mounted on a floating head with controls capable of providing uniform depth and alignment.

The cutting heads shall consist of stacked 3 mm to 9 mm [**1/8 inch to 3/8 inch**] wide diamond tipped cutting blades. The spacers between each blade must be such that the raise in the bottom of the finished groove between the blades is less than 25% of the groove depth. The resulting bottom of the groove shall have a fine corduroy finish. If a coarse tooth pattern is present, the Contractor shall increase the number of blades and/or decrease the thickness of the spacers on the cutting head.

The equipment shall be capable of grooving the total width of the groove in one pass or be capable of grooving uniform depths with multiple passes. The maximum number of passes is detailed below. If multiple passes are used, the ridge between passes shall be mechanically removed prior to groove cleaning and pavement marking application.

The equipment shall be capable of grooving double lines simultaneously or parallel lines to a uniform depth with two passes.

The equipment shall be self-vacuuming and leave the cut groove ready for pavement marking installation. Dry cut grooving without a vacuum will only be allowed if markings run perpendicular to the roadway, such as Stop Bars. The pavement marking manufacturer shall approve the equipment and method used.

(B) Grooves

The grooving shall be preformed within the following tolerances. Failure to meet these tolerances will result in the suspension of work until the Contractor can demonstrate that these tolerances can be met to the satisfaction of the Engineer. **The pavement marking system shall be applied so that it is centered within the groove.**

GROOVE WIDTH AND MAXIMUM NUMBER OF PASSES		
MARKING WIDTH	GROOVE WIDTH	MAX NUMBER OF PASSES
100 mm **[4 inches]**	130 mm ± 3 mm **[5" ± 1/8"]**	1
150 mm **[6 inches]**	180 mm ± 3 mm **[7" ± 1/8"]**	1
200 mm **[8 inches]**	230 mm ± 3 mm **[9" ± 1/8"]**	1
300 mm **[12 inches]**	330 mm ± 3 mm **[13" ± 1/8"]**	2
600 mm **[24 inches]**	635 mm ± 3 mm **[25" ± 1/8"]**	3

The groove depth shall be 110 mil ± 10 mil.

Since pavements are irregular, the depth of groove across the width may vary. To compensate for this, the depth of the groove shall be measured from the bottom of the groove to a straight edge extended over the groove from the pavement surface opposite the pavement joint.

FULL DEPTH GROOVE LENGTHS	
Full Depth Groove Length (Broken Line)	3 m ± 75 mm **[10 feet ± 3 inches]**
Tapers At End of Each Line	150 mm ± 230 mm **[6 inches to 9 inches]**
Space Between Double lines	100 mm ± 6 mm **[4 inches ± 1/4 inch]**

The groove shall be placed 50 mm ± 25 mm **[2 inches ± 1 inch]** from the edge of joints or seams along edge or centerline, unless otherwise indicated in the Plan.

Grooving alignment deviations from the control guide or existing lines specified by the Engineer shall not exceed 50 mm **[2 inches]**.

All pavement markings to be grooved in shall be placed in accordance with pavement marking or element manufacturer's instructions.

If the Poly Pref (GR IN) markings are to be installed in the same location where there are existing pavement markings, including interim or temporary, the removal of the existing pavement markings shall be incidental to and included within the Poly Pref (GR IN) pay item. The Contractor may cut the groove and remove the existing marking in a simultaneous operation.

S-136.7 Mn/DOT 2582.3G is hereby deleted and replaced with the following:

Contractors applying pavement markings for Mn/DOT under a contract **are required** to fill out the "Construction Striper Operations Daily Log" form which can be found on the Office of Traffic, Safety and Technology website and as approved by the Engineer.

S-136.8 The provisions of Mn/DOT 2582.5 are hereby deleted and replaced with the following:

2582.5 BASIS OF PAYMENT

Payment for pavement markings installed at Contract prices per unit of material shall be compensation in full for all costs incurred in materials, traffic control, installation, surface preparation, use of primers, in accordance to Contract documents or as approved by the Engineer.

ITEM NO.	ITEM	UNIT
2582.501	Pavement Message (1) Poly Preform (GR IN)	Each
2582.502	__ mm (__inch) width (2) (3) – Poly Preform (GR IN)	meter (**linear foot**)
2582.503	Crosswalk Marking – Poly Preform (GR IN)	square meter (**square foot**)

(1) Specify Message
(2) Specified Type of Line (Solid, Broken or Dotted)
(3) Specify Color

S-137 (2582) PERMANENT PAVEMENT MARKINGS (EPOXY GROUND IN)

The provisions of Mn/DOT 2582 are hereby modified and/or supplemented with the following:

S-137.1 The language below applies to the permanent pavement markings for this Project that are to be recessed pavement markings, utilizing Epoxy Paint (GR IN).

S-137.2 The pavement marking material utilized for this Project must be listed within **Epoxy Paint** category on the Mn/DOT Approved/Qualified Products Lists.

S-137.3 The provisions of Mn/DOT 2582.2 are hereby deleted and replaced with the following:

A Epoxy Resin Pavement Markings (Free of Toxic Heavy Metals) 3590

B Drop-On Glass Beads 3592

Qualified materials can be found on Mn/DOT's Qualified Products List (QPL) on the Office of Traffic, Safety and Technology website. The Pavement Marking Materials QPL can be found at http://www.dot.state.mn.us/products/pavementmarkings/pmmaterials.html. Other materials may be used on a provisional basis as detailed in the QPL process and as approved by the Engineer. Type of material used will be as specified by Contract Documents.

S-137.4 GROOVING BITUMINOUS and/or CONCRETE PAVEMENT SURFACES FOR EPOXY PAVEMENT MARKINGS

The epoxy pavement markings are to be grooved into the pavement surfaces. **GRINDER-TYPE CUTTING HEADS CANNOT BE USED.** The goal of the grooving process is to protect the pavement marking from snowplow damage and ultimately extend the service life of the pavement markings. Grooving operations are incidental to permanent pavement marking operations.

S-137.5 The following is hereby added to Mn/DOT 2582.3B, Application:

The Contractor has the option to dry or wet groove the pavement while the roadway is open or closed to traffic. The grove must be cleaned completely prior to pavement marking application, using an air compressor with at least 185 CFM air flow and 120 PSI air pressure. The compressor must be equipped with a moisture and oil trap, and cannot have more than 50 feet of 3/4 inch ID hose between the compressor and the air nozzle. The air nozzle must have an inside diameter of 1/2 inch or greater.

(A) Grooving Equipment

The grooving shall be performed by a self-propelled machine equipped with gang stacked diamond cutting blades mounted on a floating head with controls capable of providing uniform depth and alignment.

The cutting heads shall consist of stacked 3 mm to 9 mm [**1/8 inch to 3/8 inch**] wide diamond tipped cutting blades. The spacers between each blade must be such that the raise in the bottom of the finished groove between the blades is less than 25% of the groove depth. The resulting bottom of the groove shall have a fine corduroy finish. If a coarse tooth pattern is present, the Contractor shall increase the number of blades and/or decrease the thickness of the spacers on the cutting head.

The equipment shall be capable of grooving the total width of the groove in one pass or be capable of grooving uniform depths with multiple passes. The maximum number of passes is detailed below. If multiple passes are used, the ridge between passes shall be mechanically removed prior to groove cleaning and pavement marking application.

The equipment shall be capable of grooving double lines simultaneously or parallel lines to a uniform depth with two passes.

The equipment shall be self-vacuuming and leave the cut groove ready for pavement marking installation. Dry cut grooving without a vacuum will only be allowed if markings run perpendicular to the roadway, such as Stop Bars. The pavement marking manufacturer shall approve the equipment and method used.

(B) Grooves

The grooving shall be preformed within the following tolerances. Failure to meet these tolerances will result in the suspension of work until the Contractor can demonstrate that these tolerances can be met to the satisfaction of the Engineer. **The pavement marking system shall be applied so that it is centered within the groove.**

GROOVE WIDTH AND MAXIMUM NUMBER OF PASSES		
MARKING WIDTH	GROOVE WIDTH	MAX NUMBER OF PASSES
100 mm **[4 inches]**	130 mm ± 3 mm **[5" ± 1/8"]**	1
150 mm **[6 inches]**	180 mm ± 3 mm **[7" ± 1/8"]**	1
200 mm **[8 inches]**	230 mm ± 3 mm **[9" ± 1/8"]**	1
300 mm **[12 inches]**	330 mm ± 3 mm **[13" ± 1/8"]**	2
600 mm **[24 inches]**	635 mm ± 3 mm **[25" ± 1/8"]**	3

The groove depth shall be 30 mil ± 10 mil.

Since pavements are irregular, the depth of groove across the width may vary. To compensate for this, the depth of the groove shall be measured from the bottom of the groove to a straight edge extended over the groove from the pavement surface opposite the pavement joint.

FULL DEPTH GROOVE LENGTHS	
Full Depth Groove Length (Broken Line)	3 m ± 75 mm **[10 feet ± 3 inches]**
Tapers At End of Each Line	150 mm ± 230 mm **[6 inches to 9 inches]**
Space Between Double lines	100 mm ± 6 mm **[4 inches ± 1/4 inch]**

The groove shall be placed 50 mm ± 25 mm **[2 inches ± 1 inch]** from the edge of joints or seams along edge or centerline, unless otherwise indicated in the Plan.

Grooving alignment deviations from the control guide or existing lines specified by the Engineer shall not exceed 50 mm **[2 inches]**.

All pavement markings to be grooved in shall be placed in accordance with pavement marking or element manufacturer's instructions.

If the Epoxy (GR IN) markings are to be installed in the same location where there are existing pavement markings, including interim or temporary, the removal of the existing pavement markings shall be incidental to and included within the Epoxy (GR IN) pay item. The Contractor may cut the groove and remove the existing marking in a simultaneous operation.

S-137.6 Mn/DOT 2582.3G is hereby deleted and replaced with the following:

Contractors applying pavement markings for Mn/DOT under a contract **are required** to fill out the "Construction Striper Operations Daily Log" form which can be found on the Office of Traffic, Safety and Technology website and as approved by the Engineer.

S-137.7 The provisions of Mn/DOT 2582.5 are hereby deleted and replaced with the following:

2582.5 BASIS OF PAYMENT

Payment for pavement markings installed at Contract prices per unit of material shall be compensation in full for all costs incurred in materials, traffic control, installation, surface preparation, use of primers, in accordance to Contract documents or as approved by the Engineer.

ITEM NO.	ITEM	UNIT
2582.501	Pavement Message (1) Epoxy (GR IN).....	Each
2582.502	__ mm (__inch) width (2) (3) – Epoxy (GR IN)	meter (**linear foot**)
2582.503	Crosswalk Marking – Epoxy (GR IN)	square meter (**square foot**)

(1) Specify Message

(2) Specified Type of Line (Solid, Broken or Dotted)

(3) Specify Color

S-138 (3103) PORTLAND-POZZOLAN CEMENT

Mn/DOT 3103 is hereby deleted and replaced with the following:

Portland-Pozzolan cement shall be from certified sources only. Portland-Pozzolan cement furnished under this Specification shall conform to AASHTO M 240, Type IS, Type I(SM), Type IP, Type I(PM), Type IP-A or any other portland-pozzolan cement as approved by the Concrete Engineer, except as modified by the following:

(1) The fly ash constituent of the interground cement shall not exceed 20 percent.

(2) The fly ash constituent of blended cement shall not exceed 15 percent.

(3) The ground granulated blast furnace slag constituent of the interground cement shall not exceed 35 percent.

(4) The ground granulated blast furnace slag constituent of blended cement shall not exceed 35 percent.

All delivery invoices shall include a standardized Cement Certification Statement which is as follows: (insert company name) certifies that the cement produced at (insert plant and location) conforms to AASHTO and Mn/DOT Specifications for Type (insert Type) cement. The change of source or color, or both, of cement on a Project will not be permitted without the written approval of the Concrete Engineer.

S-139 (3137) COARSE AGGREGATE FOR PORTLAND CEMENT CONCRETE

Mn/DOT 3137 shall be deleted and replaced with the following:

3137.1 SCOPE

Provide coarse aggregate for use in portland cement concrete.

3137.2 REQUIREMENTS

A General

Provide coarse aggregate consisting of clean, sound, durable particles, uniform in quality, and free from wood, bark, roots, and other deleterious material.

The Engineer, in conjunction with the Concrete Engineer, may consider the following as the basis for acceptance of coarse aggregate for portland cement concrete:

(1) Results of laboratory tests,
(2) Behavior under natural exposure conditions,
(3) Behavior of other portland cement concrete with aggregate from the same or similar geological formations or deposits, and
(4) Any other tests or criteria as deemed appropriate by the Engineer, in conjunction with the Concrete Engineer.

B Classification

Provide coarse aggregate meeting the requirements of one of the following classifications:

(1) Class A: Crushed quarry rock including quartzite, gneiss, and granite, or mine trap rock including basalt, diabase, gabbro, and other igneous rock types. Class A aggregate may contain no greater than 4.0 percent non-Class A aggregate. The Department will not allow the intentional blending or adding of non-Class A aggregate.

(2) Class B: All other crushed quarry or mine rock types including carbonates, rhyolite, and schist.

(3) Class C: Natural or partly crushed gravel obtained from a natural gravel deposit.

(4) Class D: Mixture of at least two classes of coarse aggregate. The Engineer, in conjunction with the Concrete Engineer, will determine the suitability of the Class D aggregate for the proposed use including proportioning.

(5) Class R: Aggregate obtained from recycling concrete. The Engineer, in conjunction with the Concrete Engineer, will determine the suitability of the Class R aggregate for the proposed use including proportioning.

C Washing

Wash Class B, Class C, Class D, and Class R coarse aggregate. Wash Class A aggregate as needed to comply with the requirements of Table 3137-1.

D Quality

Quality requirements are based on each individual aggregate fraction unless otherwise allowed by the Engineer, in conjunction with the Concrete Engineer with the exception of the following:

(1) When 100 percent of the fractions from a single source pass the 1 in [**25 mm**] sieve, quality requirements are based on the composite value of the combined aggregates.

(2) When less than 100 percent of the fractions from a single source pass the 1 inch [**25 mm**] sieve:

(a) Those fractions passing the 1 inch [**25 mm**] sieve are combined and based on the composite value;

(b) The fractions greater than or equal to 1 inch [**25 mm**] are based on each individual aggregate fraction.

D1 Coarse Aggregate for General Use

Provide coarse aggregate for general use concrete in accordance with Table 3137-1.

Table 3137-1

Coarse Aggregate for General Use

	Quality Test	Maximum Percent by Weight
(a)	Shale:	
	Fraction retained on the ½ in [**12.5 mm**] sieve	0.4
	Fraction retained on the No. 4 [**4.75 mm**] sieve, as a percentage of the total material	0.7
(b)	Soft iron oxide particles (paint rock and ochre)	0.3
(c)	Total spall materials*:	
	Fraction retained on the ½ in [**12.5 mm**] sieve	1.0
	Fraction retained on the No. 4 [**4.75 mm**] sieve, as a percentage of the total material	1.5
(d)	Soft particles‖	2.5
(e)	Clay balls and lumps	0.3
(f)	Sum of (c) total spall materials, (d) soft particles, and (e) clay balls and lumps†	3.5
(g)	Slate	3.0
(h)	Flat or elongated pieces‡	15.0
(i)	Quantity of material passing No. 200 [**75 µm**] sieve:	
	Class A and Class B aggregates#	1.5
	Class C and Class D aggregates§	1.0
(j)	Los Angeles Rattler, loss on total sample	40.0
(k)	Soundness of magnesium sulfate**	15.0

* Includes the percentages retained by shale and soft iron oxide particles, plus other iron oxide particles, unsound cherts, pyrite, and other materials with similar characteristics.

‖ Exclusive of shale, soft iron oxide particles, and total spall materials.

† Sum of the total spall materials, soft particles, and clay balls and lumps. For total spall materials, use the percent in the total sample retained on the No. 4 [**4.75 mm**] sieve.

‡ Thickness less than 25 percent of the maximum width. Length greater than 3 times the maximum width.

\# Each individual fraction at the point of placement consists of dust from the fracture and free of clay or shale.

§ For each individual fraction at the point of placement.

** Loss at 5 cycles for any fraction of the coarse aggregate. Do not blend materials from multiple sources to obtain a fraction meeting the sulfate soundness requirement.

D2 Coarse Aggregate for Bridge Superstructure

Provide coarse aggregate in accordance with 3137.2D1 except as modified by Table 3137-2 for use in the following:

(1) Bridge superstructure (deck, railing, posts, curbs, sidewalks, and median strips);
(2) Approach panels; and
(3) Precast concrete panel facings for Mechanically Stabilized Earth walls.

Table 3137-2

Coarse Aggregate for Bridge Superstructure

Quality Test		Maximum Percent by Weight
(a)	Shale:	
	Fraction retained on the ½ in [**12.5 mm**] sieve	0.2
	Fraction retained on the No. 4 [**4.75 mm**] sieve as a percentage of the total material	0.3
(b)	Soft iron oxide particles (paint rock and ochre)	0.2
(c)	Total spall materials*:	
	Fraction retained on the No. 4 [**4.75 mm**] sieve as a percentage of the total material	0.5
(d)	Soft particles‖	2.5
(e)	Clay balls and lumps	0.3
(f)	Sum of (c) total spall materials, (d) soft particles, and (e) clay balls and lumps, use the percent in the total sample retained on the No. 4 [**4.75 mm**] sieve	3.0
(g)	Absorption for Class B aggregate	1.10
(h)	Carbonate in Class C and Class D aggregates by weight	30.0

* Includes the percentages retained by shale and soft iron oxide particles, plus other iron oxide particles, unsound cherts, pyrite, and other materials with similar characteristics.

‖ Exclusive of shale, soft iron oxide particles, and total spall materials.

† Sum of the total spall materials, soft particles, and clay balls and lumps. For total spall materials, use the percent in the total sample retained on the No. 4 [**4.75 mm**] sieve.

D3 Coarse Aggregate for Concrete Pavement

Provide coarse aggregate in accordance with 3137.2D1, except as modified by Table 3137-3, for use in the following:

(1) Concrete pavement, and

(2) Concrete pavement rehabilitation.

Table 3137-3
Coarse Aggregate for Concrete Pavement

Quality Test		Maximum Percent by Weight
(a)	Absorption for Class B aggregate	1.75
(b)	Carbonate in Class C aggregate by weight	30.0

E Gradation

Provide coarse aggregate in accordance with Table 3137-4 including all sizes within the specified limits. The Department defines coarse aggregate as the uniform product of the producing plant, unless some sizes are removed to meet the gradation requirements. Do not use broken or noncontinuous gradations.

If the coarse aggregate has less than 100 percent passing the 1 in [**25 mm**] sieve, proportion the coarse aggregate using at least two fractions. Gradation requirements are based on the composite value of the combined coarse aggregates.

Table 3137-4

Coarse Aggregate Designation for Concrete,
percent by weight passing square opening sieves

Aggregate	2 in [50 mm]	1½ in [37.5 mm]	1¼ in [31.5 mm]	1 in [25.0 mm]	¾ in [19.0 mm]	⅝ in [16.0 mm]	½ in [12.5 mm]	⅜ in [9.5 mm]	No.4 [4.75 mm]
CA-00	—	—	—	100	95 – 100	—	—	—	0 – 10
CA-15	100	95 – 100	—	—	35 – 65	—	—	5 – 25	0 – 7
CA-25	100	95 – 100	—	—	50 – 80	—	—	20 – 40	0 – 7
CA-35	—	100	95 – 100	—	55 –85	—	—	20 – 45	0 – 7
CA-45	—	—	100	95 – 100	65 – 95	—	—	25 – 55	0 – 7
CA-50	—	—	—	100	85 – 100	—	—	30 – 60	0 – 12
CA-60	—	—	—	—	100	85 – 100	—	40 – 70	0 – 12
CA-70	—	—	—	—	—	100	85 – 100	50 – 100	0 – 25
CA-80*	—	—	—	—	—	—	—	100	55 – 95

* Do not allow greater than 5 percent to pass the No. 50 [300 µm] sieve.

If producing Class R aggregate, remove reinforcing steel from the concrete and any concrete material passing the No 4 [**4.75 mm**] sieve.

3137.3 SAMPLING AND TESTING

Sample and test coarse aggregate fractions separately in accordance with Table 3137-5.

Table 3137-5
Preliminary Coarse Aggregate Testing

Aggregate	Notification and Testing Requirement
New source	Notify the Engineer at least 1 month before use. Perform new source concrete aggregate testing in accordance with the procedure on the Department's website.
Previously tested aggregate	Notify the Engineer at least 2 weeks before use. Perform additional testing as directed by the Engineer, in conjunction with the Concrete Engineer.

Sample and test coarse aggregate in accordance with Table 3137-6.

Table 3137-6
Coarse Aggregate Test Methods

Test	Testing Method
Sampling	Mn/DOT Concrete Manual
Sieve analysis	Mn/DOT Concrete Manual
Shale test	Mn/DOT Laboratory Manual 1207
Quantity of material passing the No. 200 [**75 µm**] sieve	Mn/DOT Concrete Manual
Specific gravity and absorption	Mn/DOT Laboratory Manual 1204
Density	AASHTO T 19 or Mn/DOT Laboratory Manual 1211
Los Angeles Rattler loss	AASHTO T 96
Void content	AASHTO T 19* or Mn/DOT Laboratory Manual 1211
Deleterious materials	Mn/DOT Laboratory Manual 1209
Soundness; magnesium sulfate	Mn/DOT Laboratory Manual 1219
Soft particles	Mn/DOT Laboratory Manual 1218
Flat or elongated pieces	ASTM D 4791
Clay balls or lumps	Mn/DOT Concrete Manual

* Base the void content on an oven-dry and compacted-by-rodding condition of the aggregate and a value of 62.4 lb per cu. ft [**1,000 kg per cu. m**] for water.

S-140 (3138) AGGREGATE FOR SURFACE AND BASE COURSES

The provisions of Mn/DOT 3138 are hereby modified as follows:

S-140.1 The second paragraph of Mn/DOT 3138.2B Gradation Tables 3138-1 and 2, is revised to read as follows:

If Class 7 is substituted for Classes 1, 3, 4, 5, or 6, it shall meet the gradation requirements of the substituted class (Table 3138-1); except that, for Class 5 and 6, up to 5 percent by mass **(weight)** of the total composite mixture may exceed 25.0 mm (**1 inch**) sieve but 100 percent must pass the 37.5 mm (**1.5 inch**) sieve. Surfacing aggregate mixtures containing salvaged materials shall meet the gradation requirements of the materials specified in the Plan. All gradations will be run on the composite mixture before extraction of the bituminous material.

S-140.2 TABLE 3138-1 in Mn/DOT 3138.2B Gradation Tables 3138-1 and 2, is hereby deleted and replaced with the following:

TABLE 3138-1

BASE AND SURFACING AGGREGATE

Total Percent Passing

Sieve Size	Class 1 **(A)**	Class 2	Class 3 **(A)**	Class 4 **(A)**	Class 5 **(A) (B)**	Class 6 **(A) (B)**
75 mm (3 inches)	--	--	--	--	--	--
50 mm (2 inches)	--	--	100	100	--	--
37.5 mm (1½ inches)	--	--	--	--	--	--
25.0 mm (1 inch)	--	--	--	--	100	100
9.0 mm (3/4 inch)	100	100	--	--	90-100	90-100
9.5 mm (3/8 inch)	65-95	65-90	--	--	50-90	50-85
4.75 mm (No. 4)	40-85	35-70	35-100	35-100	35-80	35-70
2.00 mm (No. 10)	25-70	25-45	20-100	20-100	20-65	20-55
425 µm (No. 40)	10-45	12-30	5-50	5-35	10-35	10-30
75 µm (No. 200)	8.0-15.0	5.0-13.0	5.0-10.0	4.0-10.0	3.0-10.0	3.0-7.0

(A) When salvaged materials are substituted for another class of aggregate, it shall meet the gradation requirements of the class being replaced except as amended in 3138.2 B.

(B) The gradation requirements for aggregates containing 60% or more crushed quarry rock may be amended with the concurrence of the Project Engineer and the Grading and Base Engineer.

S-140.3 The first paragraph of Mn/DOT 3138.3 Sampling and Testing, is hereby deleted and replaced with the following:

Samples for testing to determine compliance with the aggregate gradation specifications for base and shoulder surfacing shall be obtained from the roadway at a time when the material is ready for compaction. However, Class 1, 2, and 7 shoulder surfacing aggregates may be sampled from a stockpile, tested, and accepted before roadway placement, provided that:

(a) No more than 25 percent of the stockpile samples fail to meet gradation requirements.

(b) The average of all stockpile tests meet requirements.

(c) The Contractor mixes the material during placement to the satisfaction of the Engineer.

S-140.4 The fifth paragraph of Mn/DOT 3138.3 Sampling and Testing, is revised to read as follows:

The stockpile shall be sampled at the rate of one field gradation test per 1,000 metric tons (**tons)** of aggregate used on the Project.

S-141 (3139) GRADED AGGREGATE FOR BITUMINOUS MIXTURES

Mn/DOT 3139 is hereby deleted and replaced with the following:

3139 Graded Aggregate for Bituminous Mixtures

3139.1 Scope

Provide graded aggregate for use in bituminous mixtures.

3139.2 PLANT MIXED ASPHALT Requirements

A Composition

Provide graded aggregate composed of any combination of the following sound durable particles as described in 3139.2B.

Do not use graded aggregate containing objectionable materials including:

(1) Metal,

(2) Glass,

(3) Wood,

(4) Plastic,

(5) Brick, or

(6) Rubber.

Provide coarse aggregate free of coatings of clay and silt.

Do not add soil materials such as clay, loam, or silt to compensate for a lack of fines in the aggregate.

Do not blend overburden soil into the aggregate.

Feed each material or size of material from an individual storage unit at a uniform rate.

Do not place blended materials from different sources, or for different classes, types, or sizes together in one stockpile unless approved by the Engineer as a Class E aggregate.

B Classification

B.1 Class A

Provide crushed igneous bedrock consisting of basalt, gabbro, granite, gneiss, rhyolite, diorite, and andosite. Rock from the Sioux Quartzite Formation may contain no greater than 4.0 percent non-Class A aggregate. Do not blend or add non-Class A aggregate to Class A aggregate.

B.2 Class B

Provide crushed rock from other bedrock sources such as carbonate and metamorphic rocks (Schist).

B.3 Class C

Provide natural or partly crushed natural gravel obtained from a natural gravel deposit.

B.4 Class D

Provide 100 percent crushed natural gravel produced from material retained on a square mesh sieve with an opening at least twice as large as Table 3139-2 allows for the maximum size of the aggregate in the composite asphalt mixture. Ensure the amount of carryover, material finer than the selected sieve, no greater than 10 percent of the Class D aggregate by weight.

B.5 Class E

Provide a mixture consisting of at least two of the following classes of approved aggregate:

(1) Class A,

(2) Class B, and

(3) Class D.

B.6 Steel Slag

Steel slag cannot exceed 25% of the total mixture aggregate and be free from metallic and other mill waste. The Engineer will accept stockpiles if the total expansion is no greater than 0.5 percent as determined by ASTM D 4792

B.7 Taconite Tailings

Obtain taconite tailings from ore mined westerly of a north-south line located east of Biwabik, Minnesota (R15W-R16W) or from ore mined in southwestern Wisconsin.

B.8 Recycled Asphalt Shingles (RAS)

Provide recycled asphalt shingles manufactured from waste scrap asphalt shingles (MWSS) or from tear-off scrap asphalt shingles (TOSS). Consider the percentage of RAS used as part of the maximum allowable Recycled Asphalt Pavement (RAP) percentage. See Table 3139-3.

B.8.A RAS Gradation .....Mn/DOT Laboratory Procedure 1801

Provide RAS in accordance with the following gradation requirements:

Table 3139-1
RAS Gradation

Sieve size	Percent passing
½ in [12.5 mm]	100

No. 4 [4.75 mm]	90

B.8.B Binder Content

Determine the binder content using chemical extraction meeting the requirements of Mn/DOT Lab Procedure 1851 or 1852.

B.8.C Bulk Specific Gravity

The Contractor may use an aggregate bulk specific gravity (Gsb) of 2.650 in lieu of determining the shingle aggregate Gsb in accordance with Mn/DOT Lab Procedure 1205.

B.8.D Waste Materials

Do not allow extraneous materials including metals, glass, rubber, nails, soil, brick, tars, paper, wood, and plastics greater than 0.5 percent by weight of the graded aggregate as determined by material retained on the No. 4 [4.75 mm] sieve as specified in Mn/DOT Laboratory Procedure 1801.

B.8.E Stockpile

Do not blend an RAS stockpile with other salvage material. Do not blend MWSS and TOSS. The Contractor may blend virgin sand material with RAS to minimize agglomeration if the Contractor accounts for the blended sand in the final mixture gradation.

B.8.F Certification

Ensure the processor provides RAS certification on the following Department form "Scrap Asphalt Shingles from Manufacture Waste" or "Tear-Off Scrap Asphalt Shingles" at www.dot.state.mn.us/materials/bituminous.html

B.9 Crushed Concrete and Salvaged Aggregate

The Contractor may incorporate no greater than 50 percent of crushed concrete and salvaged aggregate in non-wear mixtures. Do not use crushed concrete in wearing courses.

B.10 Ash

Sewage sludge ash and waste incinerator ash are allowed as an aggregate source at a maximum of 5% of the total weight of the mixture. Sewage sludge ash for use as an aggregate source in wear or non-wear courses must be approved by examination with the Hazard Evaluation Process by MnDOT's Office of Environmental Stewardship.

B.11 Recycled Asphalt Pavement (RAP)

B.11.A Aggregate Angularity

Provide combined RAP and virgin aggregates that meet the composite coarse and fine aggregate angularity for the mixture being produced.

B.11.B Objectionable Material

Do not use RAP containing objectionable materials including metal, glass, wood, plastic, brick, or rubber.

B.11.C Asphalt Binder Content

Determine the asphalt binder content using the Mn/DOT Lab Manual Method 1851 and 1852.

B.11.D Bulk Specific Gravity

Determine the bulk specific gravity in accordance with Mn/DOT Laboratory Procedure 1205 or 1815.

C Quality

C.1 Los Angeles Rattler Test .....Mn/DOT Laboratory Procedure 1210

Ensure a coarse aggregate loss no greater than 40 percent.

C.2 Soundness (Magnesium Sulfate) .Mn/DOT Laboratory Procedure 1219

Maximum loss after 5 cycles on the coarse aggregate fraction (material retained on No. 4 [4.75 mm] sieve for any individual source within the mix) as follows:

(1) Percent passing the ¾ in [19 mm] sieve to percent retained on the ½ in [12.5 mm] sieve, ≤ 14%,

(2) Percent passing the ½ in [12.5 mm] sieve to percent retained on the ⅜ in [9.5 mm]sieve, ≤18%,

(3) Percent passing the ⅜ in [9.5 mm] sieve to percent retained on the No. 4 [4.75 mm] sieve, ≤ 23%,

(4) For the composite if all three size fractions are tested, the composite loss ≤ 18%, and acceptance will be granted if:

(4.1) If the Contractor meets the composite requirement, but fails to meet at least one of the individual components, the Engineer may accept the source if each individual component is no greater than 110 percent of the requirement for that component.

(4.2) If the Contractor meets each individual component requirement, but fails to meet the composite, the Engineer may accept the source if the composite is no greater than 110 percent of the requirement for the composite.

Coarse aggregate that exceeds the requirements in this section for material passing the No. 4 [4.75 mm] sieve cannot be used.

C.3 Spall Materials and Lumps .....Mn/DOT Laboratory Procedure 1219

Stop asphalt production if the percent of spall or lumps measured in the stockpile or cold feed exceeds the values listed in Table 3139-3. Determine lump compliance by dry batching.

C.4 Insoluble Residue Test .....Mn/DOT Laboratory Procedure 1221

If using Class B carbonate materials ensure the portion of the insoluble residue passing the No. 200 [75 µm] sieve is no greater than 10 percent.

D Gradation

Ensure the aggregate gradation broad bands meet the following requirements in accordance with AASHTO T-11 (passing the No. 200 [75 µm] wash) and AASHTO T-27.

Table 3139-2
Aggregate Gradation Broad Bands (percent passing of total washed gradation)

Sieve size	A	B	C	D
1 in [25.0 mm]	—	—	100	—
¾ in [19.0 mm]	—	100*	85 – 100	—
½ in [12.5 mm]	100*	85 – 100	45 – 90	—
⅜ in [9.5 mm]	85 – 100	35 – 90	—	100
No. 4 [4.75 mm]	25 – 90	30 – 80	30 – 75	65 – 95
No. 8 [2.36 mm]	20 – 70	25 – 65	25 – 60	45 – 80
No. 200 [0.075 mm]	2.0 – 7.0	2.0 – 7.0	2.0 – 7.0	3.0 – 8.0

* The Contractor may reduce the gradation broadband for the maximum aggregate size to 97 percent passing for mixtures containing RAP, if the oversize material originates from the RAP source. Ensure the virgin material meets the requirement of 100 percent passing the maximum aggregate sieve size.

Table 3139-3 Mixture Aggregate Requirements				
Aggregate Blend Property	**Traffic Level 2**	**Traffic Level 3**	**Traffic Level 4**	**Traffic Level 5**
20 year Design ESAL's	<1 million	1 - 3 million	3 - 10 million	10 – 30 million
Min. Coarse Aggregate Angularity (ASTM D5821) (one face / two face), %- Wear (one face / two face), %- Non-Wear	 30/- 30/-	 55 / - 55 / -	 85 / 80 60/ -	 95 / 90 80 / 75
Min. Fine Aggregate Angularity (FAA) (AASHTO T304, Method A) %- Wear %-Non-Wear	40 40	42 40	44 40	45 40
Flat and Elongated Particles, max % by weight, (ASTM D 4791)	-	10 (5:1 ratio)	10 (5:1 ratio)	10 (5:1 ratio)
Min. Sand Equivalent (AASHTO T 176)	-	-	45	45
Max. Total Spall in fraction retained on the #4 [4.75mm] sieve – Wear Non-Wear	5.0 5.0	2.5 5.0	1.0 2.5	1.0 2.5
Maximum Spall Content in Total Sample – Wear Non-Wear	5.0 5.0	5.0 5.0	1.0 2.5	1.0 2.5
Maximum Percent Lumps in fraction retained on the #4 [4.75mm] sieve	0.5	0.5	0.5	0.5
Class B Carbonate Restrictions				
Maximum% -#4 [-4.75mm] Final Lift/All other Lifts	100/100	100/100	80/80	50/80
Maximum% +#4 [+4.75mm] Final Lift/All other Lifts	100/100	100/100	50/100	0/100
Max. allowable scrap shingles–MWSS(1) Wear/Non Wear	5/5	5/5	5/5	5/5
Max. allowable scrap shingles –TOSS(1) Final Lift/All other Lifts	5/5	5/5	0/5	0/0

(1) MWSS is manufactured waste scrap shingle and TOSS is tear-off scrap shingle.

3139.3 Permeable Asphalt Stabilized Stress Relief Course (PASSRC) and Permeable Asphalt Stabilized Base (PASB) Requirements

A Restrictions

Do not use recycled materials including glass, concrete, bituminous, shingles, ash, and teel slag.

B Gradation

The Gradation limits are also considered the Job Mix Formula (JMF) limits.

B.1 PASB

Table 3139-4 PASB Aggregate Gradation	
Sieve Size	Percent Passing
1 ½ inch [37.5 mm]	100
1 inch [25.0 mm]	95 - 100
¾ inch [19.0 mm]	85 – 95
3/8 inch [9.5 mm]	30 – 60
No. 4 [4.75 mm]	10 – 30
No. 8 [2.36 mm]	0 – 10
No. 30 [600 µm]	0 – 5
No. 200 [75 µm]	0 - 3

B.2 PASSRC

Table 3139-5 PASSRC Aggregate Gradation	
Sieve Size	Percent Passing
5/8 inch [16.0 mm]	100
1/2 inch [12.5 mm]	85 – 100
3/8 inch [9.5 mm]	50 – 100
No. 4 [4.75 mm]	0 – 25
No. 8 [2.36 mm]	0 – 5

C Quality

Requirements will meet all of 3139.2.C.

D Mixture Quality Requirements

Table 3139-6 Mixture Aggregate Requirements for PASSRC & PASB	
Aggregate Blend Property	
Coarse Aggregate Angularity (ASTM D5821) (one face/two face) % PASSRC (1) PASB (1)	 95/- -/65
Fine Aggregate Angularity (FAA) (AASHTO T304, Method A) %	NA
Flat and Elongated Particles, max(2) % by weight, (ASTM D 4791)	NA
Clay Content (2) (AASHTO T 176)	NA
Total Spall in fraction retained on the 4.75mm [**#4**] sieve	3.0
Maximum Spall Content in Total Sample	5.0
Maximum Percent Lumps in fraction retained on the 4.75mm [**#4**] sieve	0.5

(1) Carbonate Restrictions: If Class B (as defined in 3139.2.B.2), crushed carbonate quarry rock (limestone or dolostone), is used in the mixture, or if carbonate particles in the material retained on the 4.75 mm [**No. 4**] sieve exceeds 55

percent, by weight, the minus 0.075 mm [# **200**] sieve size portion of the insoluble residue shall not exceed 10 percent.

3139.4 Ultra Thin Bonded Wearing Course (UTBWC) Requirements.

A. Restrictions

Do not use recycled materials including glass, concrete, bituminous, shingles, ash, and steel slag.

B. Coarse Aggregate

Provide a Class A aggregate, as defined in 3139.2.B.1, in accordance with the following requirements:

Table 3139-7
UTBWC Coarse Aggregate Requirements

Tests	Mn/DOT Laboratory Manual Method	Limit, %
Flat and elongated ratio at 3:1	1208	≤ 25
Los Angeles Rattler Test (LAR)	1210	≤ 40
Bulk Specific Gravity	1204	

C. Fine Aggregate

Provide fine aggregate, passing the No. 4 [4.75 mm] sieve in accordance with the following requirements:

Table 3139-8
Fine Aggregate Requirements

Tests	Method	Limit, %
Sand equivalent*	AASHTO T 176	≥ 45
Uncompacted void content	Mn/DOT Laboratory Manual 1206	≥ 40
Bulk Specific Gravity	Mn/DOT Laboratory Manual 1205	

3139.5 SAMPLING AND TESTING

Perform sampling, sieve analysis, lumps, crushing, and shale testing meeting the requirements of the Mn/DOT Laboratory Manual.

S-142 <u>(3236) REINFORCED CONCRETE PIPE</u>

The provisions of Mn/DOT 3236 are modified and/or supplemented with the following:

S-142.1 Manufacturers of reinforced concrete pipe may produce an alternate "offset joint" on the spigot end of the pipe. This type of offset joint is to be used with the profile or prelubricated pipe seal systems. See Mn/DOT Standard Plate 3006.

S-142.2 The first paragraph of Mn/DOT 3236.2A3 is hereby deleted and replaced with the following:

Cement substitutions as addressed in 2461.3D are hereby modified as follows to allow:

(a) 30 percent Class F or Class C fly ash by weight

(b) 35 percent ground granulated blast furnace slag by weight

(c) 35 percent substitution with a combination of ground granulated blast furnace slag and Type F or Type C fly ash by weight

All other provisions of 2461.3D shall apply. The use of admixtures shall conform to 2461.3E.

S-143 (3247) CORRUGATED POLYETHYLENE PIPE

The provisions of Mn/DOT 3247 are supplemented with the following:

Corrugated Polyethylene Pipe (HDPE) manufacturing facilities will be required to be reviewed and in compliance with AASHTO's National Transportation Product Evaluation Program (NTPEP) for producers of HDPE thermoplastic pipe.

To determine if a pipe manufacturing plant is qualified as a supplier to Mn/DOT, check the Plastic Pipe Audit Status on the National Transportation Product Evaluation Program (NTPEP) website at the following: http://data.ntpep.org/Module/PIPE/StatusReport.aspx

If the audit has been completed this plant has met Mn/DOT requirements. When clicking on the details link under the Manufacturer Production for each location, the blue X's denote that particular size and type of pipe is manufactured at that location.

The Certificate of Compliance shall be in accordance with Mn/DOT 1603 and include the facility used for manufacturing the HDPE Corrugated Polyethylene Pipe supplied to the Project.

S-144 (3301) REINFORCEMENT BARS

The third to the last paragraph of Mn/DOT 3301.2 is hereby deleted and replaced with the following:

When epoxy coated reinforcement bars are specified, coating shall be in conformance with AASHTO M 284M/M 284-06. Application of epoxy coating shall be made in a fusion bonded epoxy coating plant that has been granted "Certification" by the Concrete Reinforcing Steel Institute, or an organization approved by the Materials Engineer.

S-145 (3302) DOWEL BARS

Mn/DOT 3302 is hereby deleted and replaced with the following:

Dowel bars shall be fabricated from Grade 40 or 60 steel in accordance with AASHTO M31 and be epoxy coated in conformance with AASHTO M254. The ends of the dowel bars may be epoxy coated at the discretion of the fabricator. Application of epoxy coating shall be made in a fusion bonded epoxy coating plant that has been granted "Certification" by the Concrete Reinforcing Steel Institute, or an organization approved by the Materials Engineer.

The plant's quality control office shall maintain documentation containing the data required by certification. This documentation shall contain test data and measurements taken at times and locations approved by the Engineer, ensuring that monitoring, by personnel not directly involved in production, is sufficient for compliance with approved procedures.

All dowel bars shall be stored and protected in accordance with 2472.

Shearing will be permitted provided the coating is not damaged and subject to permissible deformation. Any deformation larger than true shape shall not exceed 1 mm (**0.04 inch**) increase in diameter or thickness and shall not extend more than 10 mm (**0.40 inch**) from the dowel end.

S-146 (3310) HIGH STRENGTH LOW ALLOY COLUMBIUM-VANADIUM STEEL

The second paragraph of Mn/DOT 3310.2 is hereby deleted and replaced with the following:

Sheet and strip supplied to this Specification shall conform to ASTM A 1011/A 1011M, Grade 340 (50), Class 1; ASTM A 1018/A 1018M, Grade 340 (50), Class 1; and 3308.

S-147 (3376) FENCE WIRE

Mn/DOT 3376 is hereby deleted and replaced with the following:

3376.1 Scope

This Specification covers fencing wire of the barbed, woven, and chain link types, together with wire fasteners, tie wires, and tension wire.

3376.2 REQUIREMENTS

A Barbed Wire

Barbed wire shall meet the requirements of AASHTO M280. Unless otherwise specified, either zinc-coated or aluminum–coated barbed wire may be supplied. Barbs shall be 4-point full round with 9.5 mm (**0.375 inch**) minimum barb length. Zinc coated barbed wire shall meet Class 3 coating requirements. Aluminum-coated barbed wire may be Standard or High Security Grade.

B Woven Wire

Woven wire fence fabric shall be metallic-coated steel and shall conform to the requirements of AASHTO M 279, for the size and construction specified. Fabric shall be either Type A or Type Z with Class 3 coating.

When size and construction are unspecified, any 3.8 mm **(9 gauge)** diameter wire design may be furnished at the Contractor's option.

The vertical stay wires shall be joined to each horizontal line wire by the hinge joint method consisting of not less than one and one-half twists tightly wrapped.

C Chain Link

Chain link fabric shall conform to AASHTO M 181 for the type specified. The finished wire size, size of mesh, type of selvage, and height of fabric shall be as shown in the Plans.

Type IV fabric, PVC coated steel, shall be Class A extruded and bonded, or shall be Class B bonded.

D Miscellaneous Items

Wire fasteners, tension wire, fittings, and hardware items shall be furnished in Compliance with AASHTO M 181, except as noted or unless otherwise indicated in the Contract or approved by the Engineer.

Staples for attaching wire to wood posts shall be galvanized L or U shaped fasteners produced from 3.8 mm **(9 gauge)** diameter wire, with shank length as specified in 2557.3C2. L-shaped staples shall have barbed, serrated or ring shanks. The staples shall be galvanized after fabrication in accordance with ASTM A 153.

Flat metal bands may be approved for use in lieu of wire fasteners.

All polymer coated tension wires shall have a Class 2A or 2B polymer coating thickness in accordance with Specification ASTM F 1664.

All polymer coated hog rings and wire ties shall have a Class 2A or 2B polymer coating thickness in accordance with Specification ASTM F 668.

All polymer coated truss rods, truss rod tighteners, tension bands, brace bands, post and line caps, and cups shall have a Class 2B polymer coating thickness in accordance with Specification ASTM F 668, but shall have a minimum coating thickness of 0.25 mm (**0.010 inches**).

Tension wire shall meet the requirements of AASHTO M181 Class 1 for zinc, or it shall meet the requirements of AASHTO M181 for aluminum coating.

Non-polymer coated hog rings shall be a minimum of 12 gauge galvanized steel meeting the requirements of ASTM F 626, with a minimum of 244 g/m^2 (**0.80 ounces per square foot**) of zinc coating.

Polymer coated hog rings shall be 12 gauge minimum galvanized steel meeting the requirements of AASHTO M 181 with a minimum of 92 g/m^2 (**0.30 ounces per square foot**) of zinc coating.

Non-polymer coated wire ties shall meet the requirements of one of the following:

a) Nine-gauge steel 3.76 +/- 0.13 mm (**0.148 +/- 0.005 inch**) with a tensile range of 55 to 65 ksi coated with a minimum of 275 g/m^2 (**0.90 ounces per square foot**) of zinc coating in accordance with Specification ASTM A 641 (A 641M), class 3 or A coating, or coated with 122 g/m^2 (**0.40 ounces per square foot**) of aluminum in accordance with Specification ASTM A 809.

b) 4.55 mm (**0.179 inch**) minimum aluminum alloy conforming to Specification ASTM B 211, alloy 1100 H18.

Polymer coated wire ties shall meet the requirements of one of the following:

a) Nine-gauge steel 3.76 +/- 0.13 mm (**0.148 +/- 0.005 inch**) with a tensile range of 55 to 65 ksi coated with a minimum of 100 g/m^2 (**0.35 ounces per square foot**) of zinc coating in accordance with Specification ASTM A 641 (A 641M), Class 1, or coated with a minimum of 61 g/m^2 (**0.20 ounces per square foot**) of aluminum.

b) 4.55 mm (**0.179 inch**) minimum aluminum alloy conforming to Specification ASTM B 211, alloy 1100 H18.

Truss rod tighteners, tension bands, brace bands, rail ends, brace bands, post and line caps, and cups shall have zinc coating meeting the requirements of ASTM F 626**,** 366 g/m^2 (**1.2 ounces per square foot**) minimum.

Truss rods shall have zinc coating of 183 g/m^2 (**0.6 ounces per square foot**) minimum, and shall be polymer coated, for both a polymer and non-polymer coated fence.

Zinc coatings on tension bars shall meet the requirements of AASHTO M111, Grade 85.

Nuts and bolts shall be zinc coated in accordance with AASHTO M 232, and when polymer coating is specified, may be shop or field-painted in lieu of polymer coating.

3376.3 INSPECTION AND TESTING

Inspection and testing for compliance with the specified requirements shall be done at such time and place as the Engineer elects.

S-148 (3401) FLANGED CHANNEL SIGN POSTS

The provisions of Mn/DOT 3401 are hereby modified and/or supplemented with the following:

S-148.1 The last sentence of Mn/DOT 3401.2A Material, is hereby revised to read as follows:

The steel shall conform to the mechanical requirements of ASTM A 499, Grade 420 (**60**) and to the chemical requirements of ASTM A 1 for rails having nominal mass of 45 kg per m [**91 pounds per yard**] of length or heavier.

S-148.2 Mn/DOT 3401.2C Mass, is hereby deleted and the following substituted therefore:

C Mass (Weight)

The nominal mass (**weight**) of the posts shall be as specified in the Plans, 3.0, 3.7, 4.1, 4.5, or 6.0 kg/m (**2.0, 2.5, 2.75, 3.0, or 4.0 pounds per foot**) of length, before punching and exclusive of galvanizing, anchor plates, and other attachments. A variation up to 5 percent under the specified mass (**weight**) will be permitted.

S-148.3 Mn/DOT 3401.2D, Shape and Dimensions, is hereby deleted and the following substituted therefore:

D Shape and Dimensions

The posts shall be of channel section design with flanges against which the sign will be placed. The front face of the flanges shall be flat and in the same plane so as to provide smooth, uniform bearing for the sign. The back of the flanges and the posts shall be flat and parallel to the front. The cross section of the posts shall be symmetrical about the central axis perpendicular to the front and back.

The posts shall be straight, free from excessive bow, twist, and other injurious or unsightly defects.

S-148.4 Table 3401-1 is hereby deleted and the following substituted therefore:

TABLE 3401-1 NOMINAL DIMENSIONS					
Mass per Unit of Length	3.0 kg (**2.0 pound**)	3.7 kg (**2.5 pound**)	4.1 kg (**2.75 pound**)	4.5 kg (**3.0 pound**)	6.0 kg (**4.0 pound**)
Wide overall across front	76 mm (**3 inches**)	76 mm (**3 inches**)	76 mm (**3 inches**)	83 mm (**3¼ inches**)	89 mm (**3½ inches**)
back surface	25 mm (**1 inch**)	25 mm (**1 inch**)	25 mm (**1 inch**)	32 mm (**1¼ inches**)	32 mm (**1¼ inches**)
flanges (bearing surface)	13 mm (**½ inch**)	13 mm (**½ inch**)	13 mm (**½ inch**)	16 mm (**⅝ inch**)	19 mm (**¾ inch**)
Depth overall, front to back	35 mm (**1⅜ inches**)	35 mm (**1⅜ inches**)	38 mm (**1½ inches**)	38 mm (**1½ inches**)	43 mm (**1.7 inch**)
Thickness of Metal, Flanges & Back	3 mm (**1/8 inch**)	3 mm (**1/8 inch**)	5 mm (**3/16 inch**)	4 mm (**0.16 inch**)	5 mm (**0.20 inch**)
Sides	3 mm (**1/10 inch)**	3 mm (**1/8 inch)**	3 mm (**1/8 inch)**	4 mm (**0.15 inch**)	4 mm (**0.15 inch**)

NOTE: Dimension requirements are for flat flange sections.

S-149 (3403) ROLLED STEEL FENCE POSTS

The provisions of Mn/DOT 3403 are hereby modified and/or supplemented with the following:

S-149.1 Mn/DOT 3403.2 is hereby deleted and the following substituted therefore:

3403.2 REQUIREMENTS

Rolled steel line posts and all angle post assemblies (for end, gate, corner, or intermediate brace assemblies) shall be furnished in accordance with ASTM A 702 and the details in the Plans.

Standard Plates 9321E and 9324C are modified as follows:

a) The 21 square inch anchor plate is not required; the anchor plate must meet ASTM A 702.

b) Line Posts shall be 7' - 0" and the posts shall be driven into the ground 3' - 0".

S-150 (3406) STRUCTURAL METAL FENCE POSTS

Mn/DOT 3406 is hereby deleted and replaced with the following:

3406.1 SCOPE

This Specification covers tubular metal posts and rails, and metal rolled-formed "C" posts, and fittings, for fencing.

3406.2 REQUIREMENTS

A Materials

The posts and rails shall be manufactured in accordance with AASHTO M181, except as noted.

Round posts shall be Grade 1.

When the "ALTERNATE ROLL FORMED" posts as shown on Standard Plate 9322 are used, the weights and other properties shall conform to the requirements of ASTM F1043 for heavy industrial fence with Type A coating. Pull, end, and corner posts shall be 5.10 pounds per foot nominal weight. Line posts shall be 2.40 pounds per foot nominal weight. Brace Bars shall be 1.35 pounds per foot nominal weight.

Coatings on posts, rails, and fittings shall be applied after welding and fabrication activities.

Tie wires, clips, and bands used for fastening chain link fabric to posts, rails, and braces shall be as specified in 3376.

Type IV (PVC) posts, rails, frames, sleeves, and hardware items shall be first coated with zinc and then Class B bonded to a minimum polymer thickness of 250 µm **(0.010 inch).**

B Dimensions

Posts, rails, and stretcher bars shall be as shown in the Contract. The AASHTO M 181 acceptable tolerance shall govern, except that posts more the 25 mm **(1.0 inch)** under the specified length will not be accepted.

All fittings and hardware shall be designed in the proper manner. The tops shall be designed to fit securely over the posts.

3406.3 INSPECTION AND TESTING

Inspection for compliance with the foregoing requirements will be at such time and place as the Engineer elect.

Along with the samples, The Contractor shall provide a manufacturer's certificate that the material was manufactured, sampled, tested, and inspected in accordance with these Specifications and has been found to meet these requirements.

S-151 (3590) EPOXY RESIN PAVEMENT MARKINGS (FREE OF TOXIC HEAVY METALS)

The provisions of Mn/DOT 3590.3 are hereby deleted and replaced with the following:

3590.3 SPECIFIC REQUIREMENTS

A Epoxy Resin Material

The material shall be composed of epoxy resins and pigments only. No solvents are to be given off to the environment upon application to a pavement surface.

The composition shall be within the tolerance permitted for the product tested and approved by Mn/DOT. Type II material shall be completely free of TMPTA (Tri-Methyol Propane Tri-Acrylate) and other multi-functional monomers.

All materials shall be free of lead, cadmium, mercury, hexavalent chromium and other toxic heavy metals as defined by the United States Environmental Protection Agency.

Color:

The color of the white epoxy shall be a pure flat white, free of tints. The color of the yellow epoxy shall closely match Color Number 33538 of Federal Standard 595 and shall conform to the following CIE Chromaticity limits using illuminant "C":

x | 0.470 | 0.485 | 0.520 | 0.480

y | 0.440 | 0.460 | 0.450 | 0.420

Daylight Directional Reflectance (Y), white, minimum 83

Daylight Directional Reflectance (Y), yellow, minimum 50

Testing will be according to:

Daylight Directional Reflectance ..... ASTM D 2805

Color ..... ASTM D 2805

Adhesion Capabilities:

When the adhesion of the material to portland cement concrete (the concrete shall have a minimum of 2 070 kPa [**300 psi**.] tensile strength) is tested according to American Concrete Institute Committee 403 testing procedure, the failure of the system must take place in the concrete. The concrete shall be 32°C [**0°F**] when the material is applied, after which the material shall be allowed to cure for 72 hours at 23 ± 2°C [**73 ± 36° F**].

Abrasion Resistance:

When the abrasion resistance of the material is tested according to ASTM C 501 with a CS-17 wheel under a load of 1000 grams for 1000 cycles, the wear index shall be no greater than 82. (The wear index is the weight in milligrams that is abraded from the sample under the test conditions).

Hardness:

The Type D durometer hardness of the material shall be not less than 75 nor more than 90 when tested according to ASTM D2240 after the material has cured for 72 hours at 23 ± 2°C [**73 ± 36° F**].

Tensile Strength:

The tensile strength of the material, when tested according to ASTM D 638, shall not be less than 41 370 kPa [**6,000 psi**.] after 72 hours cure at 23 ± 2°C [**73 ± 36° F**].

Compressive Strength:

The compressive strength of the material, when tested according to ASTM D 695, shall not be less than 82,700 kPa [**12,000 psi.**] after 72 hours cure at 23±2°C [**73 ± 36° F**].

Thickness:

The epoxy pavement marking wet film thicknesses shall be a minimum of 380 µm [**15 mil**] on all pavement surfaces. For the Spec 2360 SUPERPAVE wearing courses the epoxy pavement marking wet film thicknesses shall be increase from a minimum of 380 µm [**15 mil**] to a minimum thickness of 508 µm [**20 mil**] wet film.

B Glass Beads

Glass beads shall meet the requirements of AASHTO M247, Type I, and:

a. Coatings -- the beads shall be treated according to the manufacturers recommendations and meet the requirements of Section 4.4.2 of M247, and

b. Roundness-- the beads shall have a roundness of at least 80%.

For 380 µm [**15 mil**] applications, glass beads shall be applied at a rate of at least 3.0 kg/L [**25 pounds per gallon**]. A greater bead application rate may be necessary for meeting the performance criteria (minimum levels of retroreflectivity). This will require contractors to consult with all the material manufacturers.

Time to No-Track:

Type I material shall be in "no-tracking" condition in 15 minutes or less and within 45 minutes for Type II material. The "no-tracking" condition shall be determined on an application of specified thickness to the pavement and covered with glass beads at the rate of at least 3.0 kg/L [**25 pounds per gallon**]. The lines for this test shall be applied with striping equipment operated so as to have the material at manufacturer's recommended application temperature. This maximum "no-tracking" time shall not be exceeded when the pavement temperature varies from 10 to 49° C [**50 to 120° F**] and under all humidity conditions, providing the pavement is dry. The no-tracking time shall be determined by passing over the line with a passenger car or pickup truck at a speed of 40 to 55 km/hr [**25 to 35 mph**] in a simulated passing maneuver. A line showing no visual deposition of the material to the pavement surface when viewed from a distance of 15 m [**50 feet**] shall be considered as showing "no-tracking" and conforming to this requirement for time to "no-track."

S-152 (3591) HIGH SOLIDS WATER BASED TRAFFIC PAINT

The following is hereby added to Mn/DOT 3591.2 C:

C5 Glass beads shall be applied immediately after application of a paint line at a rate of 960 gram per Liter (**8 pounds per gallon**). Beads shall be evenly distributed on pavement. All material shall be placed in a workmanlike manner, which shall result in a clearly defined line that has been adequately reflectorized with glass beads.

S-153 (3592) DROP-ON GLASS BEAD

The provisions of Mn/DOT 3592.3 are hereby deleted and replaced with the following:

3592.3 SPECIFIC REQUIREMENTS

Glass beads shall meet the requirements of AASHTO M247, Type I, “standard gradation” except the beads will have a minimum of 80 percent true spheres. The dual treated beads will meet the moisture resistant requirements of AASHTO M 247 Section 4.4.2 and pass the adherence treatment Dansyl Chloride Test. The moisture resistant silicone treated beads will meet AASHTO M 247 Section 4.2.2.

S-154 (3721) PREFORMED ELASTOMERIC COMPRESSION JOINT SEALS FOR CONCRETE

The provisions of Mn/DOT 3721 are hereby modified with the following:

S-154.1 The following is hereby inserted into Mn/DOT 3721.2A3 after Compression-Deflection Characteristics:

17.5 mm (**11/16 inch**) Seal:

Force @ 14 mm, 0.70 N/mm min..... Mn/DOT Method *(C)*

Force @ 0.55 inch pounds/linear inch ..... [4 min] Mn/DOT Method *(C)*

Force @ 10 mm, 3.50 N/mm max..... Mn/DOT Method *(C)*

Force @ 0.40 inch pounds/linear inch ..... [20 max] Mn/DOT Method *(C)*

S-154.2 Table 3721-2 is hereby deleted from Mn/DOT 3721.3C3 and replaced with the following:

TABLE 3721-2
SPECIFIED SPECIMEN SIZE AND TEST DEFLECTIONS

Nominal Width of Seal mm **(inches)**	**Column A Specimen Length** ± 5 mm **(± 0.2 inch)**	**Column B Test Width for Min. Pressure** mm **(inches)**	**Column C Test Width for Max. Pressure** mm **(inches)**
17.5 mm (**11/16 inch**)	100 mm (**4 inch**)	14mm (**0.55 inch**)	10 mm (**0.40 inch**)
20 mm (**13/16 inch**)	100 mm (**4 inch**)	16.5mm (**0.65 inch**)	10 mm (**0.41 inch**)
32 mm (**1-1/4 inch**)	100 mm (**4 inch**)	25.0 mm (**1.00 inch**)	11 mm (**0.44 inch**)
50 mm (**2 inch**)	150 mm (**6 inch**)	41.0 mm (**1.62 inch**)	17 mm (**0.69 inch**)
90 mm (**3-1/2 inch**)	150 mm (**6 inch**)	75.0 mm (**3.00 inch**)	35 mm (**1.38 inch**)

S-155 (3753) TYPE 1-D MEMBRANE CURING COMPOUND

The following is hereby added to the Mn/DOT Standard Specifications:

3753 TYPE 1-D MEMBRANE CURING COMPOUND

3753.1 SCOPE

Provide clear or translucent liquid membrane forming curing compounds with a Type 1-D fugitive dye for spray application on portland cement colored or stamped surfaces, where a finished white surface would mask the decorative finished concrete surface when exposed to the air.

3753.2 REQUIREMENTS

A General

Provide membrane curing compound meeting the following requirements:

- All membrane-curing compounds pre-approved by the Department before use. The most current approved lots and batches with product expiration dates are available from the Approved Products list,
- Meets the requirements of the Mn/DOT Curing Compound Manufacturer Approval Program, as listed in the Mn/DOT Approved Products List, including pre-testing of materials by the manufacturer,
- Meets the requirements of ASTM C 309, Type 1-D Curing Compound, and
- The Engineer will not allow the use of curing compound that is over 1 year from the manufacture date.

The Contractor may use Type 1-D curing compound in other concrete applications as approved by the Engineer or as shown on the special provisions. Use of any other Type 1 curing compound is at the discretion of the Engineer in conjunction with the Concrete Engineer.

3753.3 SAMPLING AND TESTING

Provide samples for testing meeting the requirements of the Schedule of Materials Control.

Test the material at an application rate of 200 sq. ft. per gal [**5 sq. m per L**].

S-156 (3754) POLY-ALPHA METHYLSTYRENE (AMS) MEMBRANE CURING COMPOUND

Mn/DOT 3754 is hereby deleted and replaced with the following:

3754 POLY-ALPHA METHYLSTYRENE (AMS) MEMBRANE CURING COMPOUND

3754.1 SCOPE

Provide poly-alpha methylstyrene liquid membrane curing compounds for spray application on portland cement concrete surfaces exposed to the air.

3754.2 REQUIREMENTS

Provide membrane-curing compound meeting the following requirements:

(1) All membrane-curing compounds pre-approved by the Department before use. The most current approved lots and batches with product expiration dates are available from the Approved Products list.

(2) Meets the requirements of the Mn/DOT Curing Compound Manufacturer Approval Program, including pre-testing of all materials by the manufacturer.

(3) Meets the requirements of ASTM C 309 for the type required by the contract.

(4) The Engineer will not allow the use of curing compound that is over 1 year from the manufacture date.

(5) White pigmented Type 2, Class B.

(6) Resin is 100 percent poly-alpha methylstyrene.

Table 3754-1 **Requirements for 3754 AMS Curing Compound**	
Properties	**Range**
Total solids, % by weight of compound	≥ 42
% reflectance in 72 h (ASTM E 1347)	≥ 65
Loss of Water, kg/sq. m in 24 h (ASTM C 156)	≤ 0.15
Loss of Water, kg/sq. m in 72 h (ASTM C 156)	≤ 0.40
Settling Test, ml/100 ml in 72 h*	≤ 2
V.O.C. Content, g/L	≤ 350
Infrared Spectrum, vehicle‖	100% α methylstyrene

* Test in accordance with the method on file at the Materials Laboratory.

‖ Match the infrared scan for the dried vehicle from the curing compound to the infrared scan on file at the Materials Laboratory

3754.3 SAMPLING AND TESTING

Provide samples for testing meeting the requirements of the Schedule of Materials Control.

Test the material at an application rate of 200 sq. ft per gal [**5 sq. m per L**].

S-157 <u>(3755) LINSEED OIL MEMBRANE CURING COMPOUND</u>

The following is hereby added to the Mn/DOT Standard Specifications:

3755 LINSEED OIL MEMBRANE CURING COMPOUND

3755.1 SCOPE

Provide extreme service white pigmented, heavy bodied linseed oil emulsion for application as a membrane cure and sealer.

3755.2 REQUIREMENTS

Provide membrane curing compounds meeting the following requirements:

(1) All membrane-curing compounds pre-approved by the Department before use. The most current approved lots and batches with product expiration dates are available from the Approved Products list.

(2) Meets the requirements of the Mn/DOT Curing Compound Manufacturer Approval Program, including pre-testing of materials by the manufacturer,

(3) Composed of a blend of boiled linseed oil and high viscosity, heavy bodied linseed oil emulsified in a water solution meeting the requirements of ASTM C 309, Type 2, except the Department will waive the drying time,

(4) The Engineer will not allow the use of curing compound that is over 1 year from the manufacture date,

(5) Sprayable at temperatures of at least 40° F [**4° C**], and

(6) Chemical requirements in accordance with the following table:

Table 3755-1

Chemical Requirements of Linseed Oil Membrane Curing Compound (volumes exclusive of added pigment)

Material Requirements	Percent by Weight
Oil phase (50% ± 4% by volume):	
Boiled linseed oil	80
Z-8 viscosity linseed oil	20
Water phase (50% ± 4% by volume)	100

3755.3 SAMPLING AND TESTING

Provide samples for testing meeting the requirements of the Schedule of Materials Control.

Test membrane curing compound at an application rate of 200 sq. ft per gal [**5 sq. m per L**].

S-158 <u>(3861) PLANT STOCK</u>

The provisions of Mn/DOT 3861 are supplemented and/or modified with the following:

S-158.1 The third to last paragraph of Mn/DOT 3861.3 Sampling and Inspection, is revised to read as follows:

During the spring planting season, coniferous plants that have candled out (put out new growth) while being stored in a holding bin may be planted, however, coniferous plants that are dug after candling out will be rejected. Coniferous trees not fully branched from bottom to top will be rejected. Only coniferous trees with buds or new growth at the terminal ends of branches shall be accepted, provided the tree meets the dimensional requirements defined in the current edition of the “Inspection and Contract Administration Manual for Mn/DOT Landscape Projects”. Sheared or previously de-budded conifers may have enlarged trunk growth that is out of balance with a typical transplanted root system that is now too small. Therefore, previously sheared or de-

budded coniferous trees will be subject to the minimum trunk caliper to root ball size relationship for deciduous trees as defined in the current edition of the "Inspection and Contract Administration Manual for Mn/DOT Landscape Projects". Pine trees shall have a terminal leader bud and terminal leaders shorter than 500 mm **(18 inches)** in length. A new central leader must be trained in conifers delivered with multiple or missing leaders.

S-159 (3876) SEED

The provisions of Mn/DOT 3876 are supplemented and/or modified with the following:

S-159.1 The second paragraph of Mn/DOT 3876.1 is hereby deleted and replaced with the following:

Pure live seed (PLS) is the percent of seed germination plus dormant and/or hard seed times the percent of seed purity of each species divided by 100.

S-159.2 Mn/DOT 3876.2A General Requirements is hereby deleted and replaced with the following:

A General Requirements

All seed lots shall conform to the latest seed law of the State (Minnesota Statutes 21.80-21.91, last revised 8/2/06), and any applicable federal regulations, including those governing labeling and weed seed tolerances. Seed lots sold or offered for sale in the state of Minnesota are subject to inspection, sampling, and testing for verification of label claims and compliance with the Minnesota Seed Law by the Department of Agriculture (M.S. 18J.04). Tolerances for germination and purity factors will be applied as established in Rules 1510.0050, 1510.0060, 1510.0070, 1510.0080, 1510.0090 and 1510.0100 to seed lots sampled and tested by official methods. For all seed used in Mn/DOT mixes or projects, tests for viability (including germination and TZ tests) are valid for 12 months from the test date, exclusive of the month the test was completed. Seed shall be installed while tests are still valid.

All legume seed, including native legumes, shall have been pre-inoculated with the proper bacterial culture for the species being inoculated and with the bacteria culture designed for this purpose (pre-inoculation), in the manner and within the time specified by the manufacturer.

A1 Labeling

Contractor shall supply seed that is labeled according to the labeling requirements for agricultural seed as set forth in the Minnesota Seed Law, section 21.82. The contractor shall supply seed that also contains the following information:

a) County of genetic origin for each native component (List at least two counties for germplasm comprising accessions from multiple counties)

b) PLS percent for each mix component (Purity x Total Germination and Hard or Dormant Seed/100) for each mix component **(For PLS component of mix's)**

c) Total PLS weight for the bag. The tag shall identify this as the pay item. **(For PLS component of mix's)**

d) Total bulk weight for the bag

e) Area covered by the amount of seed in the bag when applied at the rate specified for the mix

f) All information pertaining to individual components in a mix is required for all components, including those that constitute less than 5% of the total mix.

Tags must not be hand written. If any of the above mentioned information is not included on the tag the material will be subject to specification 1503. When multiple bags are required to keep certain species or groups of species separate for the purpose of seeding those bags may be placed inside of a larger bag as long as each bag is labeled separately and the outer bag is labeled with the name of the mix.

Each package of seed must include a "Certified Vendor" tag that is issued by Mn/DOT Erosion Control unit. This will indicate that the seed has come from a Mn/DOT Approved Seed Vendor as described in 3876.3.

A2 Seed Cleaning

Contractor shall use seed that has been cleaned to an extent sufficient to allow its passage through appropriate seeding equipment. Seed of introduced species must be suitable for use in conventional seeders. Seed of native species must be suitable for use in native seed drills without plugging up the boxes, drop tubes, or planting units of the seed drills. Contractor shall not use seed that has been conditioned so much that it suffers reduced viability as a result.

A3 Substitutions

Alternate species or germplasm may only be used by requesting permission from the Office of Environmental Services Turf and Erosion Control Engineering Unit. Requests for permission must include written proof from three potential suppliers that the specified germplasm is not available. Approved substitutions will be named in a memo at the time they are approved. All currently approved substitutions will be posted on the Office of Environmental Services Erosion Control Unit website. Use of germplasm not listed herein will be considered unacceptable and will be subject to 1503.

A4 Requirements for seed of native species

Contractor shall supply and plant all seed in the 300 series mixes as pure live seed (PLS). This includes the cover crop, grass, sedge, and forb components. All seed in the cover crop component of mixes in the 300 series must be certified by the Minnesota Crop Improvement Association (MCIA) or the appropriate seed certifying agency in the seed's state of origin, if other than Minnesota.

All native seed used in mixes in the 300 series shall be certified by the Minnesota Crop Improvement Association (MCIA) in the Source Identified class. The genetic origin for this seed shall be within Minnesota or eastern North Dakota, eastern South Dakota, northern Iowa, or western Wisconsin.

Source Identified seed shall be accompanied by the appropriate quality mark documentation from the MCIA, in the form of a MCIA-labeled yellow tag or certification certificate. County of genetic origin shall be clearly identified on the seed label for all native seed. Selected class and Tested class germplasm of native species listed in

Table 3876-1 located on the website of the Office of Environmental Services Erosion Control unit may be used in 100 and 200 series seed mixtures.

If a specified species or germplasm is not available, substitutions will be granted for native seed in the 300 series mixes according to the following order of preference:

1) First preference, MCIA certified Source Identified class with a genetic origin in Minnesota or eastern North Dakota, eastern South Dakota, northern Iowa, or western Wisconsin

2) Second Preference: Source Identified seed certified by a seed certifying agency other than MCIA but with a genetic origin in Minnesota or eastern North Dakota, eastern South Dakota, northern Iowa, or western Wisconsin

3) Third Preference: Certified seed of varieties/germplasm listed in Table 3876-1.

4) Fourth Preference: Wild Type from Minnesota or eastern North Dakota, eastern South Dakota, northern Iowa, or western Wisconsin. Wild type seed is defined as seed of a local or regional ecotype that has originated from remnant native stands and that has not undergone any intentional selection process.

S-159.3 Mn/DOT Table 3876-1 is hereby deleted and replaced with the following:

TABLE 3876-1
NATIVE GRASSES
SEED COUNTS AND ACCEPTABLE GERMPLASM

Trade Name	Scientific Name+	Acceptable Varieties/Germplasm*	Seeds Per Pound
Big Bluestem	Andropogon gerardi	Bonilla, Bison	131,200
Sideoats Grama	*Bouteloua curtipendula*		96,000
Blue Grama	*Bouteloua gracilis*		640,000
Fringed Brome	*Bromus ciliatus*		160,000
Kalm's Brome	*Bromus kalmii*		128,000
Hairy wood chess	*Bromus purgans*		121,600
Buffalo grass	*Buchloe dactyloides*		51,200
Blue-joint grass	*Calamagrostis Canadensis*		3,360,000
Bottle Brush Sedge	*Carex comosa*		384,000
Tussock Sedge	*Carex stricta*		848,000
Fox Sedge	*Carex vulpinoidea*		1,440,000
Canada Wild Rye	*Elymus canadensis*	Mandan	67,200
Bottle brush grass	*Elymus hystrix*		75,200
Slender Wheat Grass	*Elymus trachycaulus*	Revenue	135,000
Virginia Wild Rye	*Elymus virginicus*		62,400
Western Wheat Grass	*Elytrigia smithii*		113,600
Reed Manna Grass	*Glyceria grandis*		1,280,000
Fowl Manna Grass	*Glyceria striata*		2,560,000
Common rush	*Juncus effusus*		16,000,000
June Grass	*Koeleria macrantha*		2,400,000
Switch Grass	*Panicum virgatum*	Forestburg, Dacotah	224,000
Fowl Bluegrass	*Poa palustris*		2,080,000
Canada Bluegrass	*Poa compressa*		2,400,000
Little Bluestem	*Schizachyrium scoparium*	Itasca Germplasm	140,800
Green Bulrush	*Scirpus atrovirens*		2,240,000
Wool-grass	*Scirpus cyperinus*		2,880,000
Soft-stem Bulrush	*Scirpus validus*		496,000
Indian Grass	*Sorghastrum nutans*	Tomahawk	132,800
Prairie Cordgrass	*Spartina pectinata*	Red River Germplasm	105,600
Rough Dropseed	*Sporobolus asper*		480,000
Sand Dropseed	*Sporobolus cryptandrus*		3,200,000
Prairie Dropseed	*Sporobolus heterolepsis*		224,000
Green Needle Grass	*Stipa viridula*		120,000

* Varieties listed are approved for use in 100 and 200 series mixes. Their substitution for MCIA Source Identified seed in 300 series mixes is only allowed upon satisfaction of the requirements of 3876.2 A5. When multiple varieties are listed for a single species, they are listed in order of preference.

S-159.4 Delete Mn/DOT 3876.2B Requirements for Native Grasses, Sedges, Rushes (label and paragraphs) and replace with:

B Requirements for Native Grasses, Sedges, and Rushes .. Table 3876-1

(Keep table 3876-1)

S-159.5 Delete Mn/DOT 3876.2E Requirements for Native Forbs (Wildflowers): (label and paragraphs) and replace with:

E Requirements for Native Forbs (Wildflowers)..... Table 3876-4

(Keep table 3876-4)

S-159.6 Mixtures 260 and 270 in Mn/DOT Table 3876-5 are hereby deleted and replaced with the following:

Mixture: 260			
Common Name	**Bulk Rate**		**% of Mix Component**
	kg/ha	**lb/ac**	
Bluegrass, Kentucky "Certified Park"	35.8	40	32.0
Bluegrass, Canada	11.2	12.5	10.0
Bluegrass, Kentucky - Low Maintenance[1]	33.6	37.5	30.0
Fescue, hard	9.0	10	8.0
Rye-grass, perennial	22.4	25	20.0
GRAND TOTALS:	**112**	**125**	**100.0**
[1] Any accepted low maintenance Kentucky Bluegrass Except "Park" ***Purpose: Commercial Turf***			

Mixture: 270			
Common Name	**Bulk Rate**		**% of Mix Component**
	kg/ac	**lb/ac**	
Bluegrass, Kentucky - Elite	33.6	37.5	25.0
Bluegrass, Kentucky - Improved	33.6	37.5	25.0
Bluegrass, Kentucky - Low Maintenance	33.6	37.5	25.0
Red fescue, creeping	10.8	12	8.0
Rye-grass, perennial	22.8	25.5	17.0
GRAND TOTALS:	**134.4**	**150**	**100.0**
Purpose: Residential Turf			

S-159.7 The 300 series mixes from Mn/DOT Table 3876-5 are hereby deleted and replaced with the following:

Table 3876-5

Mixture: 310			
Common Name	**PLS Rate**		**% of Mix Component**
	kg/ha	**lb/ac**	
Bluestem, big	2.8	2.5	25.0
Indian grass	2.8	2.5	25.0
Wild-rye, Virginia	2.2	2.0	20.0
Switch grass	0.6	0.5	5.0
Blue-joint grass	0.3	0.25	2.5
Green bulrush	0.3	0.25	2.5
Wool grass	0.3	0.25	2.5
Giant bur reed	0.3	0.25	2.5
Cordgrass, prairie	1.7	1.5	15.0
Grass Totals:	**11.3**	**10.0**	**100.0**
	kg/ha	**lb/ac**	
Winter Wheat*	62.7	56.0	80.0
Rye-grass, annual	12.5	11.2	16.0
Wheatgrass, slender	3.1	2.8	4.0
Cover Crop Totals:	**78.3**	**70**	**100.0**
Wet Forbs Mixture (Table 3876-6)	**2.2**	**2.0**	**100.0**
GRAND TOTALS:	**91.8**	**82.0**	**100.0**
*Oats to be substituted for spring plantings			
Purpose: Native mix for wetter areas. Infiltration ponds, dry ponds, wet ditches. Tall height.			

Mixture: 325			
	PLS Rate		% of Mix
Common Name	**kg/ha**	**lb/ac**	**Component**
Bluestem, big	1.7	1.5	15.0
Fringed brome	1.7	1.5	15.0
Wheat grass, slender	1.7	1.5	15.0
Virginia wild-rye	1.7	1.5	15.0
Switch grass	0.6	0.5	5.0
Fowl bluegrass	1.7	1.5	15.0
Indian grass	1.7	1.5	15.0
Prairie cord grass	0.6	0.5	5.0
Grass Totals:	**11.4**	**10.0**	**100.0**
	PLS Rate		% of Mix
Common Name	**kg/ha**	**lb/ac**	**Component**
Blue-joint grass	0.22	0.2	10.0
Bottlebrush sedge	0.34	0.3	15.0
Tussock sedge	0.22	0.2	10.0
Fox sedge	0.22	0.2	10.0
Reed manna grass	0.22	0.2	10.0
Fowl manna grass	0.22	0.2	10.0
Green bulrush	0.22	0.2	10.0
Wool grass	0.22	0.2	10.0
Soft-stem bulrush	0.34	0.3	15.0
Sedge Totals:	**2.22**	**2.0**	**100.0**
	PLS Rate		% of Mix
Common Name	**kg/ha**	**lb/ac**	**Component**
Winter Wheat*	61.6	56	80.0
Rye-grass, annual	12.3	11.2	16.0
Wheatgrass, slender	3.1	2.8	4.0
Cover Crop Totals:	**77**	**70**	**100.0**
Wet Forbs Mixture (Table 3876-6)	**2.2**	**2.0**	**100.0**
GRAND TOTALS:	**92.8**	**84.0**	**100.0**
*Oats to be substituted for spring plantings			
Purpose: Native sedge/prairie meadow mix. Reaches a height of 915 mm to 1220 mm (36 to 48 inches). Developed for use on hydric soils and for wetland restoration.			

Mixture: 328			
Common Name	**PLS Rate**		**% of Mix Component**
	kg/ha	**lb/ac**	
Bluestem, big	2.2	2	12.5
Brome, fringed	2.2	2	12.5
Wild-rye, Virginia	4.4	4	25.0
Switchgrass	1.1	1	6.3
Bluegrass, fowl	5.5	5	31.2
Indian grass	2.2	2	12.5
Grass Totals:	**17.6**	**16.0**	**100.0**
Common Name	**PLS Rate**		**% of Mix Component**
	kg/ha	**lb/ac**	
Winter Wheat*	61.6	56.0	80.0
Rye-grass, annual	12.3	11.2	16.0
Wheatgrass, slender	3.1	2.8	4.0
Cover Crop Totals:	**77**	**70**	**100.0**
Common Name	**PLS Rate**		**% of Mix Component**
	kg/ha	**lb/ac**	
Milkweed, marsh	0.33	0.3	15.0
Prairie clover, purple	0.33	0.3	15.0
Tic-trefoil, showy	0.33	0.3	15.0
Sunflower, early	0.33	0.3	15.0
Black-eyed Susan	0.55	0.5	25.0
Vervain, blue	0.33	0.3	15.0
Economy Forbs Totals:	**2.2**	**2.0**	**100.0**
GRAND TOTALS:	**96.8**	**88.0**	**100.0**
*Oats to be substituted for spring plantings			
Purpose: Native mix for infiltration ponds, dry ponds, temporary wet ditches. Tall height.			

Mixture: 330			
Common Name	**PLS Rate**		**% of Mix Component**
	kg/ha	**lb/ac**	
Grama, sideoats	3.4	3.0	21.5
Grama, blue	2.8	2.5	18.0
Bluestem, little	3.9	3.5	25.0
June grass	1.1	1.0	7.0
Dropseed, sand	1.1	1.0	7.0
Wild-rye, Canadian	3.4	3.0	21.5
Grass Totals:	**15.7**	**14.0**	**100.0**
Common Name	**PLS Rate**		**% of Mix Component**
	kg/ha	**lb/ac**	
Winter Wheat*	62.7	56.0	80.0
Rye-grass, annual	12.5	11.2	16.0
Wheatgrass, slender	3.1	2.8	4.0
Cover Crop Totals:	**78.3**	**70**	**100.0**
Dry Forbs Mixture (Table 3876-6)	**0.6**	**0.5**	**100.0**
GRAND TOTALS:	**94.6**	**84.5**	**100.0**
*Oats to be substituted for spring plantings			
Application: Native mix for Sandy/dry areas. Short height.			

Mixture: 340			
	PLS Rate		% of Mix
Common Name	**kg/ha**	**lb/ac**	**Component**
Bluestem, big	3.3	3.0	21.5
Bluestem, little	2.8	2.5	18.0
Wild-rye, Canadian	2.2	2.0	14.0
Grama, sideoats	2.2	2.0	14.0
Switch grass	0.6	0.5	4.0
Dropseed, sand	0.6	0.5	3.5
Bluegrass, Canada	3.4	3.0	21.5
June grass	0.6	0.5	3.5
Grass Totals:	**15.7**	**14.0**	**100.0**
	PLS Rate		% of Mix
Common Name	**kg/ha**	**lb/ac**	**Component**
Winter Wheat*	62.7	56.0	80.0
Rye-grass, annual	12.5	11.2	16.0
Wheatgrass, slender	3.1	2.8	4.0
Cover Crop Totals:	**78.3**	**70**	**100.0**
Dry Forbs Mixture (Table 3876-6)	**0.6**	**0.5**	**100.0**
GRAND TOTALS:	**94.6**	**84.5**	**100.0**
*Oats to be substituted for spring plantings			
Purpose: Native mix for Sandy/Dry areas. Mid-height.			

Mixture: 350			
	PLS Rate		% of Mix
Common Name	**kg/ha**	**lb/ac**	**Component**
Bluestem, big	3.4	3.0	21.5
Indian grass	2.8	2.5	18.0
Bluestem, little	2.8	2.5	18.0
Grama, sideoats	3.4	3.0	21.5
Wild-rye, Canadian	2.2	2.0	14.0
Switch grass	1.1	1.0	7.0
Grass Totals:	**15.7**	**14.0**	**100.0**
	PLS Rate		% of Mix
Common Name	**kg/ha**	**lb/ac**	**Component**
Winter Wheat*	62.7	56.0	80.0
Rye-grass, annual	12.5	11.2	16.0
Wheatgrass, slender	3.1	2.8	4.0
Cover Crop Totals:	**78.3**	**70**	**100.0**
Mesic Forbs Mixture (Table 3876-6)	**0.6**	**0.5**	**100.0**
GRAND TOTALS:	**94.6**	**84.5**	**100.0**
*Oats to be substituted for spring plantings			
Application: Native mix for general roadside areas.			

S-159.8 Mn/DOT Table 3876-6 is hereby deleted and replaced with the following:

Table 3876-6

Mixture: Mesic Forbs		
Common Name	**Botanical Name**	**% of Mix**
Aster, smooth-blue	*Aster laevis*	5.0
Milkvetch, Canada	*Astragalus canadensis*	5.0
Prairie clover, white	*Dalea candidum*	5.0
Prairie clover, purple	*Dalea purpureum*	5.0
Tick-trefoil. Showy	*Desmodium canadense*	5.0
Coneflower, narrow-leaved	*Echinacea angustifolia*	5.0
Ox-eye, common	*Heliopsis helianthoides*	5.0
Coneflower, grey-headed	*Ratibida pinnata*	5.0
Blazingstar, rough	*Liatris aspera*	5.0
Blazingstar, tall	*Liatris pycnostachya*	5.0
Bergamot, wild	*Monarda fistulosa*	5.0
Penstemon, showy	*Penstemon grandiflorum*	5.0
Mint, mountain	*Pycnathemum virginianum*	5.0
Coneflower, columnar	*Ratibida columnifera*	5.0
Black-eyed Susan	*Rudbeckia hirta*	5.0
Goldenrod, stiff	*Solidago rigida*	5.0
Vervain, blue	*Verbena hastata*	5.0
Vervain, hoary	*Verbena stricta*	5.0
Alexanders, heart-leaved	*Zizea aptera*	5.0
Alexanders, golden	*Zizia aurea*	5.0
	Total:	**100.0**
Rate: **0.6 kg/ha (½ pounds per acre) PLS.**		

Mixture: Dry Forbs		
Common Name	**Botanical Name**	**% of Mix**
Leadplant	*Amorpha canescens*	10.0
Milkweed, butterfly	*Asclepias tuberosa*	2.0
Aster, heath	*Aster ericoides*	4.0
Tic-seed, stiff	*Coreopsis palmate*	2.0
Yarrow	*Achillea millefolium*	2.0
Long-leaved bluets	*Hedyotis longifolia*	1.0
Bushclover, round-headed	*Lespedeza capitata*	3.0
Blazingstar, rough	*Liatris aspera*	4.0
Blazingstar, dotted	*Liatris punctata*	3.0
Lupine, wild	*Lupinus perennis*	5.0
Prairie clover, white	*Dalea candidum*	5.0
Prairie clover, purple	*Dalea purpureum*	16.0
Prairie rose	*Rosa arkansana*	1.0
Black-eyed susan	*Rudbeckia hirta*	18.0
Goldenrod, gray	*Solidago nemoralis*	3.0
Goldenrod, upland	*Solidago ptarmicoides*	1.0
Goldenrod, stiff	*Solidago rigida*	2.0
Goldenrod, showy	*Solidago speciosa*	2.0
Vervain, hoary	*Verbena stricta*	14.0
Alexander's,golden	*Zizea aurea*	2.0
	Total:	**100.0**
Rate: 0.6 kg/ha (½ pounds per acre) PLS		

Mixture: Wet Forbs		
Common Name	**Botanical Name**	**% of Mix**
Hyssop, fragrant giant	*Agastache foeniculum*	2.0
Water plantain	*Alisma subcordatum*	4.0
Meadow garlic	*Allium canadense*	1.0
Anemone, Canada	*Anemone Canadensis*	1.0
Milkweed, marsh	*Asclepias incarnata*	2.0
Aster, panicled	*Aster simplex*	3.0
Aster, New England	*Aster novaeangliae*	3.0
Aster, red-stalked	*Aster puniceus*	3.0
Aster, flat-topped	*Aster umbellatus*	1.0
Tick trefoil, Canada	*Desmodium glutinosum*	1.0
Joe-pye weed	*Eupatorium maculatum*	17.0
Boneset	*Eupatorium perfoliatum*	10.0
Goldenrod, grass-leaved	*Solidago graminifolia*	2.0
Sneezeweed	*Helenium autumnale*	1.0
Giant sunflower	*Helianthus giganteus*	2.0
Ox-eye, common	*Heliopsis helianthoides*	1.0
Great St. John's wort	*Hypericum pyvamidatum*	2.0
Iris, wild	*Iris versicolor*	1.0
Blazingstar, tall	*Liatris pycnostachya*	8.0
Bergamot, wild	*Monarda fistulosa*	1.0
Prairie clover, white	*Dalea candidum*	1.0
Prairie clover, purple	*Dalea purpureum*	2.0
Mountain mint	*Pycnathemum virginianum*	1.0
Black-eyed susan	*Rudbeckia hirta*	6.0
Goldenrod, stiff	*Solidago rigida*	2.0
Tall meadow rue	*Thalictrum dasycarpum*	2.0
Vervain, blue	*Verbena hastata*	14.0
Ironweed	*Veronia fasciculate*	1.0

Culver's root	*Veronicastrum virginicum*	3.0
Alexander's, golden	*Zizea aurea*	2.0
	Total:	**100.0**
Rate: 2.2 kg/ha (2 pounds/acre) PLS		

S-160 (3877) TOPSOIL BORROW

MnDOT 3877 is hereby modified as follows:

S-160.1 MnDOT 3877.2A (Topsoil Borrow) is hereby deleted and the following substituted therefore:

A Topsoil Borrow

Topsoil borrow for general use as a turf growing medium shall meet the requirements of Table 3877-1:

TABLE 3877-1		
Requirement	**Range**	**Test Method**
Material passing 1/4 inch [6.35 mm]	≥ 85%	—
Clay	5% – 30%	ASTM D 422
Silt	10% – 70%	ASTM D 422
Sand	10%– 70%	ASTM D 422
Organic matter	3% – 20%	ASTM D 2974
pH	6.1 – 7.8	ASTM G 51

S-160.2 MnDOT 3877.2B (Select Topsoil Borrow) is hereby deleted and the following substituted therefore:

B Select Topsoil Borrow

Select topsoil borrow for use as a plant growing medium in designated areas, such as landscape beds, shall meet the requirements of Table 3877-2:

TABLE 3877-2 SELECT TOPSOIL BORROW		
Requirement	**Range**	**Test Method**
Material passing 1/4 inch [6.35 mm]	≥ 90%	—
Clay	5% – 30%	ASTM D 422
Silt	10% – 50%	ASTM D 422
Sand	20% – 70%	ASTM D 422
Organic matter	3% – 20%	ASTM D 2974
pH	6.1 – 7.5	ASTM G 51
Soluble salts	≤ 0.15 siemens/m [1.5 mmho/cm]	*American Society Agronomy* Chapter 62.2

S-160.3 MnDOT 3877.2C (Premium Topsoil Borrow) is hereby deleted and the following substituted therefore:

C Premium Topsoil Borrow

Premium topsoil borrow for use as a plant growing medium in critical areas and top dressing erosion stabilization mats shall meet the requirements of Table 3887-2 and shall be screened and pulverized.

S-161 (3889) TEMPORARY DITCH CHECKS

The provisions of Mn/DOT 3889 are supplemented and/or modified with the following:

S-161.1 Mn/DOT 3889.2B Type 2: Bioroll, is revised to read as follows:

Type 2 ditch checks shall consist of 3897 Filter Log Type; Straw Bioroll or Wood Fiber Bioroll.

S-161.2 Mn/DOT 3889.2C Type 3: Bioroll Blanket System, is revised to read as follows:

Type 3 ditch checks shall consist of two components; Filter Log Type; Straw Bioroll or Wood Fiber Bioroll in accordance with 3897, staked on top of a Category 3, specification 3885 erosion control blanket. The blanket shall form a minimum width of 3.7 m **(12 feet)** perpendicular to the ditch gradient.

S-162 (3891) STORM DRAIN INLET PROTECTION

The provisions of Mn/DOT 3891 are supplemented and/or modified with the following:

S-162.1 Mn/DOT 3891.3A Rock Log, is revised to read as follows:

Rock logs shall meet the requirements of 3897.2 Filter Log Type Rock Log.

S-162.2 Mn/DOT 3891.3B Compost Log, is revised to read as follows:

Compost logs shall meet the requirements of 3897.2 Filter Log Type Compost Log

S-163 FINAL ESTIMATE AND FINAL PAYMENT

The following provisions shall apply to preparation of the Final Estimate and execution of Final Payment under this Contract:

S-163.1 FINAL ESTIMATE

State Law provides that the final estimate will be made within 90 days after completion of all work required under this Contract. If, however, the total value of the Contract exceeds $2,000,000.00, the 90 day requirement will not apply and the time allowed for making such final estimate shall be 180 days after the work under this Contract has been, in all things, completed to the satisfaction of the Commissioner.

S-163.2 FINAL PAYMENT

If this Contract contains a "Disadvantage Business Enterprise or Targeted Group Business" goal, the following requirement shall apply:

"Before final payment is made, the Contractor shall also complete an affidavit showing the total dollar amounts of work performed by disadvantaged business enterprise (DBE) and targeted group business (TGB)."

INDEX TO DIVISION SB

DIVISION SB

Section No.		Item	Page No.
SB-1		Scope of Work	1-SB
SB-2	(1706)	Employee Health and Welfare	1-SB
SB-3		Construction Operations Adjacent to Roadways	2-SB
SB-4	(1717)	Air, Land and Water Pollution	2-SB
SB-5	(1803)	Prosecution of Work	3-SB
SB-6	(2401)	Concrete Bridge Construction	3-SB
SB-7	(2402)	Steel Bridge Construction	24-SB
SB-8	(2405)	Prestressed Concrete Beams	34-SB
SB-9	(2451)	Structure Excavations and Backfills	36-SB
SB-10	(2452)	Piling	37-SB
SB-11	(2471)	Structural Metals	43-SB
SB-12		Conduit Systems	45-SB
SB-13		Loop Detectors	46-SB
SB-14	(3372)	Steel Piling	49-SB
SB-15	(3385)	Anchor Rods	49-SB
SB-16	(3391)	Fasteners	50-SB
SB-17	(3741)	Elastomeric Bearing Pads	51-SB

BRIDGE PLANS

The plans for this Project, consisting of the sheets tabulated below, were approved by the State Bridge Engineer.

BRIDGE NO.	TOTAL SHEETS	SHEET NO.	DATE OF APPROVAL
19036	91	1-91	July 9, 2012

S.P. 1901-148
July 9, 2012

New or revised sheets were approved as listed below:

BRIDGE NO.	SHEET NO.	DATE OF APPROVAL

I hereby certify that the Special Provisions for bridge construction (Division SB) contained in this Proposal were prepared by me or under my direct supervision, and that I am a duly licensed Professional Engineer under the laws of the State of Minnesota.

Todd R. Stevens
(Todd R. Stevens)

Date: 7/9/12 Lic. No. 21312

SB-1 SCOPE OF WORK

The work under this contract includes, but is not limited to, construction of a new grade-separated interchange and bridge at the specified location.

Bridges included in the Project, and their locations, are as follows:

Bridge No. 19036 – Dakota Co., C.S.A.H. 5 over T.H. 13

SB-2 (1706) EMPLOYEE HEALTH AND WELFARE

The provisions of MnDOT 1706 are supplemented as follows:

The Contractor shall submit a plan, at the preconstruction conference, for providing all OSHA required safety equipment (safety nets, static lines, false decks, etc.) for all work areas whose working surface is 1.8 meters (**6 feet**) or more above the ground, water, or other surfaces. Submittal of this plan will in no way relieve the Contractor of his/her responsibility for providing a safe working area.

All safety equipment, in accordance with the Contractor's plan, must be inplace and operable in adequate time to allow MnDOT personnel to perform their required inspection duties at the appropriate time. No concrete shall be placed in any areas affected by such required inspection until the inspection has been completed.

The installation of safety lines, safety nets, or other systems whose purpose is to reduce the hazards of bridge work may require the attachment of anchorage devices to beams, girders, diaphragms, bracing or other components of the structure. Clamp type anchorage systems which do not require modification of structural members may be used provided they do not interfere with proper execution of the work; however, if the Contractor desires to use an anchorage system which requires modification of structural members, s/he shall request approval, in writing, for plan modification as provided in MnDOT Specifications. Requests to install systems which require field welding or drilling of primary stress carrying members of a bridge will not be approved. The Contractor shall indicate any portions of anchorage devices which will remain permanently in the structure.

On both ends of each pier cap extending 1.8 meters (**6 feet**) or more above the ground, the Contractor shall install an insert or other suitable anchorage to which safety lines can be attached. Any portion of said device extending outside the finished lines of the pier cap shall be removed unless otherwise approved by the Engineer. Any void or cavity resulting from the installation or removal of this device shall be repaired or sealed to prevent the ponding or entry of water as directed by the Engineer.

Approved anchorage systems shall be furnished, installed, and removed at no increased cost to the State for materials, fabrication, erection, or removal of the bridge component or anchorage system.

SB-3 CONSTRUCTION OPERATIONS ADJACENT TO ROADWAYS

This work shall be performed in accordance with the provisions of MnDOT 1404, 1502, and 1707 except as modified below:

The Contractor shall, when necessary to adequately prevent undermining of the existing roadbed and protect traffic, sheet and shore the roadway side and end of each footing excavation having a traveled roadway adjacent thereto. The sheeting and shoring shall remain in place until the excavated area has been properly backfilled.

The Contractor will be permitted to construct his/her protective installations so as to just clear the neat lines of the footings along the roadway sides of those footings having a traveled roadway adjacent thereto.

At least six weeks before starting construction of the pier, supply the Engineer with five copies of the detailed Plans and Specifications and two copies of the associated calculations of the proposed system for constructing an installation adjacent to traveled roadways. Design the protective installations in accordance with AASHTO "Guide Design Specifications for Bridge Temporary Works". The Plans and Specifications shall be prepared by an engineer, thoroughly checked by a second engineer for completeness and accuracy, and certified by one of the aforementioned professional engineers licensed in the State of Minnesota. Include in the documents sufficient details so that construction of the proposed system, be it staged or not staged, can be completed solely by reference to the Plans and Specifications. No work will be permitted adjacent to traveled roadways until these plans have been approved by the Engineer.

SB-4 (1717) AIR, LAND AND WATER POLLUTION

The provisions of 1717 are supplemented as follows:

The Contractor's attention is hereby directed to MPCA Rule 7011.0150 as it relates to sandblasting and/or concrete removal operations (http://www.pca.state.mn.us/index.cfm).

SB-5 (1803) PROSECUTION OF WORK

The work under this Contract shall be prosecuted in accordance with the provisions of MnDOT 1803, except as modified below:

The provisions of MnDOT 1803.3 are supplemented as follows:

The Contractor's attention is hereby called to the requirements for stage construction as indicated in the Plans and/or Special Provisions. The Contractor shall submit plans and schedules to the Engineer for approval detailing his/her proposed scheme and sequence of operations, including traffic channelization, flagging, protective installations, and other pertinent procedures to be employed both on and off of the structure.

No compensation, other than for plan pay items, will be made for complying with the above requirements.

SB-6 (2401) CONCRETE BRIDGE CONSTRUCTION

The provisions of MnDOT 2401 are modified and/or supplemented with the following:

Delete the first sentence of the first paragraph of 2401.3G:

Cure newly placed concrete by providing protection against rapid loss of moisture, freezing temperatures, high temperatures, abrupt temperature changes, vibration exceeding a normal or reasonable limit as described in the Bridge Construction Manual chapter .362, shock waves, and prematurely applied loads.

Add the following to the end of the second paragraph of 2401.3G:

All sections not included in superstructures……..45

SB-6.1 Concrete Aggregate for Bridges

The provisions of 2401.2A shall apply except as modified herein:

Delete the second paragraph of 2401.2A and substitute the following therefor:

Class A or Class C coarse aggregate, as defined in 3137.2B, shall be used in all concrete for bridge superstructures, except that coarse aggregate requirements for precast concrete members fabricated under 2405 shall be as specified in 2461.2D.

SB-6.2 Placement of Concrete in High Abutments

To reduce the effects of shrinkage in abutment concrete, there shall be a 72 hour delay between concrete pours of adjacent sections that have vertical construction joints.

SB-6.3 Joint Filler and Sealing

Supplement MnDOT 2401.3J1 provisions as follows:

Complete concrete curing prior to installation of sealing materials. A minimum of 7 days drying is required prior to application of sealers. At the time sealer is installed, sawcut joints must be sandblasted, blown clean, and the concrete surfaces dry.

Construct preformed joint(s) as detailed in the plans and in conformance with the following requirements.

1. Bituminous felt must comply with AASHTO M33, modified to the extent that the load required to compress the test specimen to 50 percent of its thickness before test be not more than 1200 psi (8274 kPa).

2. Cork must comply with MnDOT 3702 and AASHTO M153 Type II.

3. Polystyrene must comply with the following:

Type	Minimum Compressive Strength (5 percent deflection)	Characteristics
A (High Density)	30 psi (207 kPa)	Closed Cell Expanded Polystyrene
B (Low Density)	10 psi (69 kPa)	Molded Polystyrene

Test for compressive strength of polystyrene in accordance with ASTM D 1621. Furnish evidence that the material meets these requirements, if requested by the Engineer.

The quantity of preformed cork joint filler material given in the plans is for convenience only. Furnish any additional joint filler required at no additional compensation.

SB-6.4 Architectural Concrete Texture (Random Batten)

This work consists of applying a random batten architectural texture to designated concrete surfaces of Bridge No. 19036 and adjacent retaining walls with the project.

A. Textured Concrete Surface Forming System

The forming system shall produce a textured effect of variable-width parallel ribs similar to the profile shown in the Plans. Relief shall be 1 inch.

Textured concrete surfaces may be formed by using a commercial form liner system or the use of batten strips attached to the forms. Either forming system shall attach easily to the forms and be removable without causing concrete surface damage. The forming system shall be designed to form surfaces conforming to the design intent including the shape, lines, and dimensions shown in the Plans, and to avoid visible pattern repeats. Pattern features shall be matched at the edge of grooves to minimize visible pattern repeats and make the concrete surface appear uniform and continuous without seams and form marks.

Commercial form liners shall be made of high-strength urethane elastomer and shall be capable of withstanding anticipated concrete pour pressures without leakage or causing physical defects.

Subject to compliance with requirements, form liner material may be obtained from one of the following manufacturers:

a. Customrock International, Inc.
b. Milestones, Inc.
c. Scott System, Inc.
d. Other manufacturers approved by the Engineer.

B. Submittals

Within 30 days of Contract approval, the Contractor shall submit the following information to the Engineer for approval:

1. Commercial form liner product data including manufacturer's technical information, label analysis, and application instructions for each material proposed for use.

2. Laboratory test reports showing that physical or performance property requirements of the commercial form liner system are met by materials proposed for use.

3. Shop drawings indicating form liner layout and termination details. Indicate backup, rustication, reveal, and chamfer strip locations. Include jointing, form tie location, pattern placement, pattern match details, and end, edge and other special conditions. Indicate tolerances and procedure of installation and separation.

4. A 4-foot x 4-foot (minimum) sample of formed pattern shown in the Plans.

5. A sample of form ties that will be permanently embedded in the concrete, submit actual samples.

6. The Contractor shall demonstrate his workmanship by completely finishing an architectural concrete textured test panel using approved form liner materials; methods and workmanship including, but not limited to, concrete mix, form release agents, joint sealing, vibrating and form stripping practices, and ordinary surface finish. The test panel shall be unreinforced, vertically-cast and of concrete construction to determine the surface texture resulting from use of form liner products. The minimum size of concrete test panel shall be 8 inches thick, 4 feet wide and 4 feet high.

The finished effect shall closely duplicate the desired appearance of the finished textured concrete surface. An unsatisfactory test panel shall be replaced with a newly constructed test panel at the Contractor's expense.

C. Surface Preparation

All exposed textured concrete surfaces shall receive ordinary surface finish in accordance with 2401.3F2a following the water-blast cleaning specified below.

Following removal of forms including form liners, minor defects shall be finished to blend with the balance of the pattern surface. Visible vertical or horizontal seams or conspicuous form marks shall be repaired to the satisfaction of the Engineer and at the Contractor's expense.

All concrete surfaces that receive the architectural concrete texture shall be water-blasted to break the surface film and to remove all laitance detrimental to the finish coating system performance. Sandblasting will not be allowed for cleaning concrete surfaces, as it will reduce the specified surface texture. Pressure washing with water at a pressure of 3000 psi at a rate of three to four gallons per minute using a fan nozzle held perpendicular to the surface at a distance of one to two feet shall be used.

Completed prepared surfaces shall be free of blemishes, discolorations, surface voids and conspicuous form marks to the satisfaction of the Engineer. The Contractor shall correct any surface defects at his/her own cost.

D. Surface Finish

The textured concrete areas on the abutments and abutment wingwalls shall be finished with Architectural Surface Finish (Single Color) in accordance with the requirements of SB-6.5.

E. Construction Requirements

Release agent(s) shall be verified to be compatible with the form liner and paint system to be applied to the textured concrete surfaces. It shall be non-staining and exhibit no adverse effects to the concrete surface. Release agent shall be applied in accordance with the approved form liner manufacturer's directions.

Form ties shall be made of non-corrosive materials when the portion permanently embedded in the concrete is less than 1½ inch from the finished surface.

All materials shall be stored, prepared, applied, and cured according to product manufacturer directions, with special attention given to recommended temperature range.

Form ties and accessories shall be positioned in pattern joints and high points of finished wall. Openings shall be boxed using polystyrene filler materials at each tie location to facilitate form tie disengagement without excessive spalling, chipping or damaging the concrete. Tie holes shall be finished in accordance with 2401.3F2a using approved patching materials.

Formwork shall be stripped in accordance with the form liner manufacturer's recommendations after the concrete has gained sufficient strength to avoid surface damage. Finish form tie holes in accordance with 2401.3F2a using approved patching materials.

Prior to reuse, form liner surfaces shall be cleaned and repaired to the satisfaction of the Engineer. Split, frayed, delaminated or otherwise damaged form liners shall not be re-used for any architectural texture work; nor shall patched form liner be re-used for exposed concrete surfaces, except as authorized by the Engineer.

F. Method of Measurement

Measurement of the architectural concrete texture will be made by the planimetric area in square feet of finished textured surface based on the Plan dimensions.

G. Basis of Payment

Payment for Item No. 2411.618 "ARCHITECTURAL CONCRETE TEXTURE (RANDOM BATTEN)" will be made at the Contract price per square foot and shall be compensation in full for all costs of providing the architectural concrete texture in accordance with the requirements described above, including the concrete test panels and additional concrete required to achieve the specified texture relief and all incidentals thereto.

SB-6.5 Architectural Surface Finish (Single Color)

A. Description of Work

This work consists of applying an architectural surface finish to all exposed concrete surfaces of Architectural Concrete Texture (Random Batten) on Bridge No. 19036. The architectural surface finish will also be applied to the adjoining retaining walls. The work shall be performed in accordance with the applicable provisions of MnDOT 2401, the Plans, and the following:

1. <u>Architectural Surface Finish (Single Color)</u>

Architectural Surface Finish (Single Color) shall be applied to the abutment faces and wing walls so designated in the Plans to receive Architectural Concrete Texture.

Architectural Surface Finish (Single Color) shall be a single color stain. The color shall match Federal Standard 595C, Color No. 30372 (Dark Tan), adjusted by field testing as required to match to the color of the Special Surface Finish.

B. Surface Color

The surface coloring for the Architectural Surface Finish described above shall be performed using approved stains or paint systems applied in a manner consistent with the aesthetic design requirements of the Project.

For Architectural Surface Finish (Single Color), the color shall be provided by a two-coat stain application. The application of the base coat shall follow ordinary concrete finish operations and be by air or airless sprayer. Allow to thoroughly dry before applying topcoat. The topcoat shall be applied in a uniform manner, moving in one direction, 5.5 to 6.5 mils wet film thickness equivalent to 1.5 to 2.0 mils dry film thickness. Use sufficient material to provide color uniformity, but avoid buildups and runs.

Cork joints shown in the Plans shall be finished to visually continue the pattern across the joint uninterrupted. A sample of the colored cork for approval shall be included in the concrete test panel described in SB-6.4.

C. Stain Materials

Stain shall be a 100 percent acrylic; water-repellant, semi-opaque, tinted emulsion sealer designed for concrete and masonry surfaces. Acceptable products shall allow moisture and vapor transmission, be formulated for exterior application with resistance to freeze/thaw, moisture, alkali, acid and mildew, mold or fungus, discoloration or degradation and meet the following requirements:

1. Physical or performance properties:

- Volume Solids .....29-31 percent (Calculated Lab Value)
- Weight Solids .....44-46 percent (Calculated Lab Value)
- Viscosity.....65-85 KU (Calculated Lab Value)
- Accelerated Weathering .....1,000 Hours Minimum (ASTM G-26)

2. Color pigments for tinted products shall be derived from synthetic mineral oxides.

3. Subject to compliance with requirements, provide colored concrete finishing products from one of the following manufacturers:

- The Sherwin-Williams Company
- Tamms Industries
- Chem-Rex
- Other approved sources

To the greatest practical extent, all concrete finishing products shall be obtained from a single source.

All materials shall be furnished, prepared, applied, cured and stored according to the product manufacturer's directions and as specified herein. Special attention shall be given to the recommended temperature range for application.

D. Submittals by Contractor

Within 60 calendar days of execution and approval of the Contract, the Contractor shall submit the following to the Engineer for approval:

1. Product data including manufacturer's technical information, label analysis, and application instructions for each material proposed for use.

2. Laboratory test reports showing that materials proposed for use meet physical or performance property requirements.

3. 1 foot X 1foot square samples of the Color System on the textured surface pattern. Final color selections will be based upon comparison to the Federal Standard 595B Color Chip in the color specified above.

E. Surface Preparation

Following removal of forms, all exposed textured concrete surfaces shall receive an ordinary surface finish in accordance with MnDOT 2401.3F2a prior to the surface preparation described below. Minor defects shall be finished to blend with the balance of the textured surfaces. On heavily textured surfaces (i.e. ashlar stone, cut stone, fractured granite, etc.) only minor defects greater than 1/2" in diameter shall be finished to blend with the balance of the textured surface. The Contractor shall make every effort to match the surface texture of patched surfaces with the surrounding textured surface. Visible vertical or horizontal seams or conspicuous form marks shall be repaired to the satisfaction of the Engineer and at the Contractor's expense.

All formed concrete surfaces to receive Architectural Surface Finish (single color) shall be water-blasted to break the surface film and to remove all laitance detrimental to the color system performance. Sandblasting will not be allowed for cleaning concrete surfaces, as it will reduce the architectural surface treatment texture. Pressure washing with water at a pressure of 3000 pounds per square inch at a rate of 3 to 4 gallons per minute using a fan nozzle held perpendicular to the surface at a distance of 12 inches to 24 inches shall be used.

F. Application

The concrete to which the architectural surface finish is to be applied must be a minimum of 28 days old. All surfaces that are to receive an architectural surface finish shall be thoroughly flushed with clean water not more than 24 hours before commencing with the finishing.

The finish color effect for the bridges and structures involves an application of a two coats of stain, uniformly applied over the entire textured surface. The color application shall meet the requirements of the product manufacturer for both thickness and coverage. Stain products used to complete the work shall not be diluted with water or other solvents in any way.

G. Basis of Payment

Payment for Item No. 2411.618 "ARCHITECTURAL SURFACE FINISH (SINGLE COLOR)" will be made at the Contract price per square foot and shall be compensation in full for all costs of providing the architectural surface finish in accordance with the requirements described above.

SB-6.6 Finish of Concrete Surfaces

Cure concrete for a minimum of 28 days (preferred) or as recommended by the manufacturer prior to applying special surface finish (SSF) or acrylic paint. Thoroughly flush all surfaces that are to receive SSF with clean water not more than 24 hours before commencing with the SSF finishing.

A. Special Surface Finish

The provisions of 2401.3F2c apply except as modified herein:

Apply two coats of SSF on the exposed concrete surfaces as designated below for Bridge No. 19036 and adjacent retaining walls within the project.

1. Barrier Railings or Parapets (non-traffic face)
2. Abutment pilasters
3. Copings
4. Edges of slabs
5. Bottom of overhangs
6. Piers/pier cap

Provide a finish color for all SSF matching Federal Standard 595C, Color No. 30372 (Dark Tan). Provide paint free of toxic metals and toxic pigments.

Apply a top coat of 100% acrylic paint (MnDOT Spec. 3584) in the color specified.

Provide a test area, 1 meter x 1 meter (**3 foot x 3 foot**), for final color selection and have the Engineer approve the test area after the finish has been added to it.

Add the following sentence after the fourth sentence in the second paragraph of 2401.3F2c:

Furnish only one approved system of mortar, bonding agent, water, and 100% acrylic paint (meeting MnDOT 3584) from the "Approved/Qualified Product Lists of Special Surface Finish" (http://www.dot.state.mn.us/products/index.html) to produce the color(s) specified in this special provision.

B. Finishing Roadway Faces and Tops of Barrier Railing

1. Finish conventionally formed roadway faces, tops of barriers/parapets (and medians), as per 2401.3F2d and the following:

a) Plan and execute concrete placement, form removal, and finishing operations so that the surface finishing can be started immediately after forms are removed. Remove the roadway face forms as soon as the concrete can retain its molded shape. In no case shall the elapsed time between concrete placement and initial surface finishing exceed 24 hours.

b) After completion of the curing period, paint the roadway faces and tops of the barrier railings (and median) with two (2) coats of an approved acrylic paint conforming to 3584. The color of the acrylic paint shall conform to Federal Std. No. 595C, Color No. 30372 (Dark Tan). Apply the paint at a rate of 7.4 m^2 per L (**300 ft^2 per gallon**). Commence or suspend the painting operation when the air and surface temperature meet or exceed the manufacturer's recommendations.

2. Finish slipformed roadway faces and tops of barrier railings (and median), in accordance with the following:

a) Lightly broom the railing surface immediately after passage of the slipformer.

b) Coat the roadway face and top of the barrier railing as described above for the conventionally formed railing.

C. Finishing Precast Concrete Girders

Apply two coats (2) of 100% acrylic paint (MnDOT 3584) on the exposed concrete surfaces as designated below for Bridge No. 19036.

1. Outside face of fascia girder
2. Bottom of bottom flange of fascia girder

Provide a finish color for acrylic paint matching Federal Standard 595C, Color No. 30372 (Dark Tan).

Apply the paint at a rate of 7.4 m^2 per L (**300 ft^2 per gallon**). Commence or suspend the painting operation when the air and surface temperature meet or exceed the manufacturer's recommendations.

D. Basis of Payment

Finishing of concrete surfaces, except as otherwise provided in these special provisions, special surface finish, application of topcoat, and painting are considered an incidental expense to the respective concrete mixes for this construction, and no additional compensation will be made for this work.

SB-6.7 Texture Planing of Bridge Slabs

Delete the 3rd paragraph of 2401.3F3b(3) and substitute the following:

Special care shall be taken in finishing roadway surfaces in the vicinity of expansion devices and other locations where breaks in continuity occur to ensure a smooth riding surface.

After the concrete has been consolidated, screeded, floated, and carpet dragged, curing shall be applied as soon as possible.

Upon completion of curing, a surface smoothness check will be made on the roadway surface. The final surface shall meet the tolerance requirements of 2401.3F3b(3). Surface areas not meeting the specified tolerances shall be corrected by removal and replacement or by grinding the high spots to the extent directed by the Engineer prior to beginning surface texturing operations. Nonconforming areas that are not satisfactorily corrected shall be subject to 1503 and 1512.

After completion of work required to meet surface tolerance, the Contractor shall texture the roadway surface in a longitudinal direction by planing the hardened concrete by diamond saw-blade grinding. The entire surface area of the roadway except the area within 500 mm (**20 inches**) of the curb shall be planed to a uniform texture. The surface shall have a finished texture with the width of the grooves between 2.5 mm (**1/10 inch**) and 3.3 mm (**1/8 inch**) at a distance of between 2.0 mm (**5/64 inch**) and 3.0 mm (**1/8 inch**) apart. The grooves shall not be less than 0.8 mm (**1/32 inch**) or more than 3.0 mm (**1/8 inch**) in depth. The actual textured surface in any selected 0.5 meter (**1.5 feet**) by 30 meter (**100 foot**) longitudinal strip shall not be less than 98% of the surface area.

During planing operations, joints must be adequately protected against damage and special care shall be taken to avoid damage to expansion devices. Planing shall be done in a manner that will provide a smooth riding surface at expansion joints and at the ends of the concrete wearing course. After completion of the planing, the permissible surface deviation will be 3 mm (**1/8 inch**) in 3 meters (**10 feet**) measured with a straightedge laid longitudinally and 3 mm (**1/8 inch**) in 1 meter (**3 feet**) measured transversely at right angles to the centerline of roadway.

All slurry material shall become property of the Contractor and must be disposed of as per MnDOT 2104.3C3, as approved by the Engineer, and as described in this special provision.

All concrete residue and water (slurry) resulting from concrete texture planning must be continuously vacuumed from the surface, captured, and containerized for further handling or processing. The slurry must not be permitted to flow across lanes occupied by traffic, flow into drainage facilities or discharge anywhere within the highway Right of Way. The Contractor must submit a slurry disposal or reuse plan at the preconstruction conference for approval by the Engineer.

The method to manage the slurry may require separation of the solids from the liquids. This separation may be achieved mechanically by centrifuging or passively by allowing settlement of the fines to occur in a temporary impermeable lined containment area. If a temporary containment area is used within the highway Right of Way, a Site Plan as per 1717 will be required for the Engineer's approval. The minimum Site Plan shall include methods for storm water protection at the temporary containment area, a description of the proposed separation method, and the process for final removal and restoration of the disturbed containment area. For any method used to separate the liquid from the solids, the Contractor shall identify the name and location of the POTW (publicly owned treatment works facility) that the liquids will be deposited in, or how the processed water will be reused by the Contractor.

As part of the slurry disposal or reuse plan, the Contractor must be able to provide, upon request, documentation that identifies the name and location of the MPCA permitted lined mixed municipal solid waste (MMSW) or industrial landfill that the solids will be deposited in, or identifies any alternative methods of disposal or reuse that meet environmental requirements of regulated industrial waste.

The Contractor shall hold MnDOT harmless for any fines or sanctions caused by the Contractor's actions or inactions regarding compliance with concrete slurry management and disposal. All materials and labor for installation of storm water protection practices, maintenance, control, removal and disposal for the management of concrete slurry is incidental to the bridge deck texture planning operation.

Planed areas not meeting requirements may, at the Engineer's option, be replaced, re-planed or left as is and accepted for payment subject to a price reduction of $2.70 per square meter (**25 cents per square foot**) but, in all cases, positive surface drainage shall be provided.

Measurement will be made to the nearest square foot of concrete area planed and textured based on surface area. Payment will be made under Item 2401.618 "BRIDGE DECK PLANING", at the Contract bid price per square foot, which shall be compensation in full for all costs relative to the specified texture planing.

SB-6.8 Curing Bridge Slab

Delete the 13th paragraph of 2401.3G and substitute the following:

Bridge slab shall have conventional wet curing applied immediately following the finishing machine or air screed. The conventional wet curing shall consist of **pre-wetted** burlap covered with white plastic sheeting. The burlap shall cover 100% of the deck area with no visible openings, the only exception being that area of the deck, which will be located beneath the permanent barrier. The wet curing shall be placed **no later than 30 minutes** after the finishing machine has completed final strike-off of the concrete surface. If, at any time, the Contractor fails to place the wet curing within the 30 minute time period, and to the satisfaction of the Engineer, the Contractor will be assessed **a non-compliance charge of $500.00 for every 5 minute period or any portion thereof**, which the Engineer determines that the Contractor has not complied. The non-compliance charge, set forth above, may be assessed more than once. The slab surface shall be kept continuously wet for an initial curing period of at least 7 days. The Contractor must provide adequate personnel to ensure the burlap is maintained in a wet condition on weekends and/or holidays. **In order to comply with the wet curing requirement a work bridge following the finish machine may be required, and an additional center rail may be required on wide bridges.**

A slab placement and curing plan for each bridge shall be submitted to the Engineer for approval at least 2 weeks prior to placement. The Contractor's plan shall include detailed information regarding the anticipated concrete delivery rates, estimated start and finish time, and material, labor and equipment that will be used to place, finish and to cure the deck segment in accordance with specifications, including placement of wet burlap, and soaker hose or other system to maintain the deck in a moist condition during the curing period. Information supplied shall also include the number of "work" bridges that will be used, and the number of people responsible for the various tasks. The plan should also discuss bulkheading methods and materials that will be used if it is determined that proposed concrete placement rates cannot be maintained.

A pre-placement meeting shall be held 2-4 days prior to the slab placement to review the information and details provided in the placement and curing plan. The meeting shall be attended by the Contractor, Engineer, and if required by the Engineer, the concrete supplier and/or concrete pump supplier.

SB-6.9 Precast Concrete Cap

This work shall consist of furnishing and installing a pre-cast concrete--hereinafter known as “cast stone”--cap assembly on top of the concrete abutment pilasters of Bridges No. 19036. An assembly consists of a single cast stone cap with anchorages required for attachment to the cast-in-place concrete pilaster. The work shall be performed in accordance with the following specifications:

A. Abbreviations

Reference to a technical society, institution, association or governmental authority is made in these Special Provisions in accordance with the following abbreviations:

AASHTO	American Association of State Highway and Transportation Officials
ACI	American Concrete Institute
AISC	American Institute of Steel Construction
ANSI	American National Standards Institute
ASTM	American Society for Testing and Materials
CRSI	Concrete Reinforcing Steel Institute
PCI	Pre-stressed Concrete Institute
MnDOT	Minnesota Department of Transportation

B. Quality Assurance

The work under this section shall comply with the applicable provisions of MnDOT 2401, the Plan details and the following:

ACI 303 "Guide to Cast-in-Place Architectural Concrete Practice."

ACI 318 "Building Code Requirements for Reinforced Concrete"

C. Fabrication Qualifications

The cast stone caps shall be produced at plants engaged primarily in the manufacturing of architectural pre-cast products for the type required.

1. Pre-cast Fabricator

Fabrication firms shall have a minimum of 5 years successful experience in the fabrication of architectural pre-cast concrete, similar to the product required for this Project. The fabricator shall have sufficient production capacity to produce, transport and deliver the cast stone caps without causing delay in the work, and whose products have been previously used and exposed to the weather with satisfactory results.

2. Installation of Cast Stone Caps

The firm setting the cast stone caps shall have a minimum of 5 years successful experienced respectively on construction of architectural pre-cast units similar to those required for this Project.

D. Submittals

Cast stone caps shall not be manufactured until the required submittals, as described below, have been accepted and approved by the Engineer.

Shop Drawings

Submit shop detail drawings for the complete fabrication of the cast stone caps. Shop drawings shall show complete information for fabrication and installation of the caps. Show details and sizes of individual pieces, reinforcing, setting marks, openings for lighting unit anchorages, details of substrate anchorages, inserts, etc. At least, 4 substrate anchorages shall be used for each cap. Include a complete field erection plan showing the location of each unit on the bridges, and the method of installation and anchoring. Each individual piece, when delivered, shall bear the same corresponding setting mark on an unexposed surface. Grouted and sealed joints between the cap and the top of the concrete post shall be of the width shown in the Plans

Product Data

Submit fabricator's specifications, data and instructions for manufactured materials and products. Include mix design(s,) certifications and laboratory tests of materials and final products as required.

After the above product submittals have been approved, a 12″ x 12″ x 2″ sample of the finished cast stone cap material shall be submitted to the Engineer to illustrate quality, color and texture of the surface.

Samples of anchorages shall be submitted if so requested by the Engineer.

E. Materials

1. Reinforcement bars shall be deformed Grade 60 steel conforming to the requirements of MnDOT 3301 and shall be epoxy coated.

2. Materials used as ingredients in mortar shall conform to the requirements for the ASTM designations listed:

a. Portland Cement (C-150 Type 1)
b. Masonry Cement (C-91)
c. Quicklime (C-5)
d. Hydrated lime (C-207 Type S)
e. Aggregates (C-144)
f. Water (clean and potable)
g. Color (lime-proof, color-fast mineral pigments)

Comply with ASTM C 270 proportion specification for type of mortar required. Type S mortar for stone masonry shall have a minimum compressive strength of 2500 psi at 28 days.

Mortar shall be mixed in a batch mixer for not less than five minutes, and shall be mixed long enough for thorough intimate mixing of all ingredients. If color is added, it shall be added in a consistent manner to provide final uniformity.

No mortar shall be re-tempered after initial set has taken place.

Grout, if used, may consist of mortar with sufficient water added to provide a pourable consistency or may consist of a 1:2:3 cement, sand and pea gravel mix.

3. Cleaner for stone shall be any commercial product formulated for the purpose intended approved by the cast stone fabricator and the Engineer.

4. Concrete surface sealer shall be a clear penetrating silane water repellant containing a 40 percent solution of alkyl silane formulated for application to concrete and masonry surfaces.

F. Proportioning and Design of Concrete Mixes

1. Prepare a design mix for the cast stone caps. The concrete shall contain no reactive aggregate and no calcium chloride. The slump shall not exceed 4 inches.

2. The design mix may be prepared by an independent testing facility or by the qualified pre-cast manufacturing plant personnel, at the fabricator's option.

3. Proportion mix by either laboratory trial batch or field experience methods, using materials to be employed on the Project and in compliance with CI 318. The same design mix shall be used for all cast stone caps.

a. Compressive Strength: 5,000 psi minimum at 28 days.

b. Total Air Content: Not less than 4% nor more than 6%.

c. Water Absorption: Not to exceed 4% by weight for cast stone units.

4. Submit written reports to Engineer of the proposed mix for the cast stone at least 30 days prior to start of production.

5. Adjustment to Concrete Mixes: Mix design adjustments may be requested when characteristics of materials, job conditions, weather, test results, or other circumstances warrant. Laboratory test data for revised mix designs and strength results shall be submitted to and accepted by the Engineer before using in the work.

6. Admixtures: Use air-entraining admixtures in compliance with the manufacturer's directions. Admixtures to increase cement dispersion or to provide increased workability for low-slump concrete may be used subject to acceptance by the Engineer. Use amounts as recommended by admixture manufacturer for climatic conditions prevailing at time of placing. Adjust quantities as required to maintain quality control.

7. Concrete Color Admixture

CHROMIX Admixture for Color-Conditioned Concrete or approved equal, in color conforming to Federal Standard 595C, Color No. 30372 (Dark Tan), adjusted by mixture testing to achieve an approximate match.

The color-conditioning admixture shall be a single-component, pigmented, water reducing, concrete admixture, factory formulated and packaged in cubic foot dosage increments, not multiple additives and pigments to be dosed separately into the mix. All batching, placing, finishing, and curing, shall be in accordance with Scofield's Tech-Data Bulletin A-304 on CHROMIX Admixtures or approved equal. Subject to requirements, all systems components shall be manufactured by one of the following firms:

L.M. Scofield Company
Los Angeles, CA 90040
(800) 222-4100, (213) 723-5285

Miles Inc.
Mobay Road
Pittsburgh, PA 15205-9741
(609) 823-1010

Davis Colors
3700 East Olympic Boulevard
Los Angeles, CA 90025
(800) 356-4848

Prism Pigments
1251 Arundel Street
St. Paul, MN 55117
(651) 488-4250

or approved equal.

G. Fabrication

1. General

Fabricate cast stone caps in compliance with approved submittals, and dimensional tolerances given below. Caps shall be straight, smooth, and true to size and shape, with exposed edges and corners precise and square unless otherwise indicated.

After removal from the forms, surfaces shall be finished uniformly and cured as specified. The concrete shall *not* be covered with plastic sheeting at any time during the curing process.

Caps that are warped, cracked, broken, spalled, stained or otherwise defective will be rejected. Any cap that does not conform to the Plan dimensions within the specified tolerances shall be subject to the provisions of MnDOT 1503.

2. Dimensional Tolerances of Cast Stone Caps

Overall dimensions, including openings for lighting units, measured at the face adjacent to mold at time of casting: Height and width - plus 1/8 inch, minus 1/8 inch from Plan dimensions.

3. Position Tolerances:

For cast-in items measured from datum line locations as shown on approved shop drawings:

a. Anchors and inserts shall be installed to provide proper alignment of the cast stone cap assembly. Face of cap stone shall line up with the alignment reference line and shall have an allowable tolerance of plus 1/8 inch, minus 1/8 inch. A minimum of four anchors are required per each pre-cast cap.

b. Place reinforcement bars within plus or minus 1/2 inch of positions shown on the approved shop drawings.

c. For exposed surfaces, cover on reinforcement bars shall be 2 inches minimum.

4. Formwork

Provide forms and form facing materials of metal, plastic, wood, or other acceptable material that is non-reactive with concrete and will produce the required finish of surfaces.

Forms shall be mortar-tight and of sufficient strength to withstand pressures due to concrete placing operations and pre-cast units of shapes, lines and dimensions indicated within specified fabrication tolerances.

Forms shall produce the textured effect of a natural stone surface having a fabricated (light sandblast) finish. Cap size shall be as shown in the Plans.

Wash surfaces of the cast stone caps with 7% to 10% muriatic acid solution at the fabricating plant in accordance with the manufacturer's recommendations. Rinse thoroughly with clean running water.

H. Construction Requirements

1. Delivery and Storage

Delivery anchorage items which are to be embedded in other construction before start of installation of the cast stone caps. Provide setting diagrams, templates, shims, spacers, instructions and directions as required.

All cast stone cap assemblies delivered to the Project shall be stored clear of the ground on non-staining planking in such a manner as to be protected from damage while in storage. Should units be stored for an extended period, cover with polyethylene or other non-staining waterproof material.

2. Setting of Cast Stone Caps

Setting of cast stone caps shall proceed only after completion and curing of the supporting concrete.

a. Setting of Cast Stone Units: All caps shall be set by experienced workers, accurately and in accordance with shop and setting drawings. Unless otherwise noted, every cap shall be set in a full bed of mortar with all joints full. All anchors and dowels shall be firmly placed and all anchor and dowel holes, and similar holes completely filled with mortar.

When setting with mortar, all caps not thoroughly wet shall be drenched with clear water just prior to setting.

After each cap has been set, all joints shall be raked to a depth of 1/4 inch from the face of the thin brick texture. The face of each cap and adjacent thin-brick texture shall then be sponged off to remove any splashed mortar or mortar smears.

All caps shall be protected from splashing mortar or damage. Any foreign matter splashed on the caps shall be removed immediately.

For caps set over lighting unit anchorages on Bridge No. 62096, the cavity around the anchor bolts shall be filled with a non-shrink grout after the caps have been set.

b. Repair of chipped or damaged cast stone caps shall be done only by technicians skilled in this class of work, with materials furnished by the manufacturer and in accordance with supplied directions. Repaired caps must be reviewed and approved by the Engineer prior to acceptance. Caps that are not successfully repaired shall be replaced.

c. Cleaning: After the setting mortar has cured, clean exposed faces of the cast stone caps to remove dirt, stains and joint sealer material after installation and completion of joint treatments. Wash and rinse in accordance with pre-cast manufacturer's recommendations. Protect other work from damage due to cleaning operations. Do not use cleaning materials or processes which could change the character of exposed concrete finishes.

The exposed faces of all cast stone caps shall be cleaned in accordance with the stone cleaner manufacturer's directions. After cleaning, thoroughly rinse the caps with clean running water. Any mortar on the face of the units shall be removed. No acids or prepared cleaners shall be used without the approval of the cast stone fabricator.

I. Method of Measurement

Measurement of the cast stone caps will be made by each cap assembly complete inplace.

J. Basis of Payment

Payment for Item 2411.602 "PRECAST CONCRETE CAP" will be made at the Contract bid price per each, and shall be compensation in full for performing all of the work described above including reinforcement, setting grout, chemical anchors, cleaning and sealing materials, and all other costs incidental thereto.

SB-7 (2402) STEEL BRIDGE CONSTRUCTION

This work shall be performed in accordance with the provisions of MnDOT 2402 except as modified below:

SB-7.1 Expansion Joint Devices

The following consists of fabricating waterproof expansion devices in accordance with 2402 and installing them at the locations shown in the Plan.

A. The Contractor shall:

1. Furnish a single diaphragm unreinforced neoprene gland whose physical and chemical properties conform to 3721 except:

(a) Do not use the requirements and test methods for the Compression-Deflection Characteristics and the Recovery Under Deflection specified in 3721.2A3 and

(b) Substitute Durometer requirement of 60 plus or minus 5 for that which is shown in 3721.2A3.

2. Make the gland 6.4 mm (**¼ inch**) thick, subject to a minimum thickness of 5.6 mm (**7/32 inch**).

3. Submit 300 mm (**12 inches**) of seal material from each lot of material for testing if required by the Project Engineer.

4. Furnish certified test results from the manufacturer attesting to the physical and chemical properties of the expansion joint devices in accordance with 1603. Provide copies of the test results for the Project Engineer, the Materials Engineer, and the Structural Metals Engineer.

B. Provide only one of the devices shown on the Department's "Approved/Qualified Product Lists for Bridge Products, "Expansion Joint System" (http://www.dot.state.mn.us/products). For products not on the Department's prequalified list, provide information as required on the web site.

C. The Fabricator will be permitted to weld pre-galvanized sections of expansion device steel rail, complete with anchorages. If the steel rail is pre-galvanized, the Fabricator shall:

1. Provide roadway sections that are not less than 3 meters (**10 feet**) long.

2. Provide an anchorage within 229 mm (**9 inches**) of each end of the sections. This may require inclusion of additional anchorages.

3. Bevel abutting ends 6 mm (**¼ inch**) on 3 edges and de-burr the edges.

4. Prepare the surfaces to be welded as per 2471.3F2.

5. Groove weld the sections on 3 sides and take care to prevent weld metal from entering the gland groove.

6. Grind the weld smooth that is across the top of the extrusion.

7. Repair the welded surface as per 2471.3L1.

D. Unless the gland is shop installed, the Fabricator shall install filler material in the gland groove in the steel rail to protect against entry of dirt and debris. Filler material shall be installed at the fabrication shop prior to storage or transportation of completed expansion device.

E. The Contractor shall:

1. Remove filler material and clean all neoprene to steel contact areas of all dirt, oil, grease, or other contaminants before installing the neoprene gland.

2. Lightly sandblast the contact areas so as to roughen but not damage the galvanized surface just before applying the lubricant adhesive.

3. Apply lubricant adhesive on both neoprene and steel contact areas when installing the gland.

4. Install the gland with tools recommended by the manufacturer for gland installation (use of other tools is prohibited).

F. Lubricant Adhesive

The lubricant adhesive shall conform to the requirements of ASTM D 4070. Provide only one of the approved lubricant adhesives shown on the Department's "Approved/Qualified Product Lists for Bridge Products, "Expansion Joint Lubricant Adhesive" (http://www.dot.state.mn.us/products). For lubricant adhesives not on the Department's prequalified list, provide information as required on the web site.

G. All expansion joint cover plates on pedestrian bridges and sidewalk areas shall be raised pattern plate.

SB-7.2 Metal Railing

This work shall consists of furnishing, coating, and installing metal railing, including all anchorages and fittings, in accordance with the applicable provisions of 2402, 2433, 2471, 2478, the Plans and the following. The Prime contractor is responsible for communicating all applicable specifications, special provisions, standards, and requirements to all subcontractors.

A. Engineer

Engineer, as used herein, when relating to shop fabrication and coatings, shall mean the Departments Bridge Construction and Maintenance Engineer.

B. Materials

All materials shall be in accordance with the Plan details. If not specified, all steel shall comply with 3306, except that pipe and pipe sleeves shall comply with 3362. Threaded rods, bolts, nuts, and washers shall meet 3391 and shall be galvanized in accordance with 3392 or electroplated in accordance with ASTM B 633, Type III, SC 4.

C. Anchorages

Except when part of a proprietary anchorage assembly, provide threaded rods and bolts shall meet the requirements of 3385 and 3391, respectively.

Use cast-in-place type anchors unless otherwise specified in the contract.

C1. Drilled in Anchorages

Drilled in anchorages may be used in the following location(s):

- Railing mounted on top of bridge barrier/parapet
- Railing mounted on top of retaining wall barrier/parapet

There is no MnDOT approved product list for adhesive anchorages having an ultimate pull-out tension greater than 5000 lbs. [22 kN]. Every adhesive system will need to be accepted by the Engineer in conjunction with the Regional Bridge Construction Engineer. To accomplish this, furnish independent laboratory test data certifying that static load tests for ultimate pull-out strengths were performed and are acceptable, as specified. Provide independent lab test data in accordance with ASTM E 488.

If the Contractor chooses adhesive anchors, the Contractor shall submit, for approval by the Engineer, the following chemical adhesive supplier's product literature or calculations to establish embedment depth. This information will demonstrate compliance with the specification:

- Name of supplier
- Full product name (as given in supplier's literature)
- Embedment depth as determined from supplier's literature

Anchorages for fastening rail posts shall have an ultimate pull out strength, as specified in the Plan, and shall be installed in sound concrete to a depth equal to a minimum depth of six times the rod or bolt diameter. Bolt heads and/or nuts shall be in contact with the adjacent surface and shall be torqued to

- 1/2 inch diameter = 30 foot pounds [41 Nm]
- 5/8 inch diameter = 60 foot pounds [81 Nm]
- 3/4 inch diameter and larger = 80 foot pounds [108 Nm]

unless a different torque is recommended by the manufacturer. Adhesive anchorages shall consist of a continuously threaded rod secured by an adhesive or mortar.

Laboratory tests, that include static load tests for ultimate pullout strengths, shall be performed on anchorage systems that are subject to tensile loads. The tests, in accordance with ASTM E 488, shall be performed and certified by an independent testing laboratory. The Contractor shall furnish the Engineer with the test reports and the specification sheets that are prescribed by ASTM E 488.

The Contractor shall demonstrate the anchorage system for drilled-in anchorage systems at the first site of field installation prior to actual use in the Project. The demonstration shall include installation and a static tension test in the presence of the Engineer, in accordance with test procedures prescribed in ASTM E 488. No portion of the testing device shall bear on the concrete surface within a distance equal to the anchorage embedment depth. Three anchorages shall be tested to not less than ½ the required minimum ultimate pull out strength or the value given in Table 1, whichever is less. Failure of an anchorage test will require a modification of installation procedures or use of a different anchorage system.

In addition to the three tests stated above, the Engineer will require that each bridge have an additional 2% (not less than 1 test) of the remaining anchorages tested at a latter date. The Engineer will determine the locations of the additional anchors. If a failure occurs while testing the additional 2%, more testing will be required at the rate of an additional 1% per each failure at the Contractor's expense. Compensation for costs of testing is included in the payment for anchorage type reinforcement bars.

Location	Bolt or Rod Diameter mm (**inches**)	Minimum Embedment Depth mm (**inches**)	Ultimate Pull-out Strength kN (**pounds**)
Metal Railing	5/8"	4"	14,000 pounds

TABLE 1

ANCHOR ROD PROOF LOADS, KN (**kips**)
TYPE OF ROD, FROM SPEC. 3385

DIA., mm (inches)	**TYPE A**	**TYPE B**	**TYPE C**	**TYPE D**
13 (**1/2"**)	21.0 (**4.75**)	25.0 (**5.7**)	45.0 (**10.1**)	22.0 (**4.9**)
16 (**5/8"**)	33.0 (**7.4**)	39.5 (**8.9**)	70.0 (**15.8**)	34.0 (**7.6**)
19 (**3/4"**)	47.0 (**10.6**)	56.0 (**12.6**)	101.0 (**22.8**)	49.0 (**11.0**)
22 (**7/8"**)	65.0 (**14.5**)	77.0 (**17.4**)	138.0 (**31.0**)	67.0 (**15.0**)
25 (**1"**)	85.0 (**19.0**)	100.0 (**22.6**)	180.0 (**40.5**)	86.0 (**19.5**)

Installation of anchorages shall be in accordance with the manufacturer's recommendations and as specified in the Plan.

Any voids occurring between the top of the anchorages and the concrete in which it is embedded shall be filled with caulk approved by the Engineer.

D. Fabrication and Inspection Requirements

Fabricator shall supply QA/QC documentation verifying that all fabricated railing components are within the necessary tolerances for proper fit up and installation of the railing, including measurements between railing base plates that indicate that the as fabricated base plate hole locations are within 1/8 inch of the specified plan dimensions, based on the plan specified rail post spacing.

All metal railing shall be fabricated in accordance with 2471 and the Plan. The welding code shall be AWS D1.1-Structural Welding Code-Steel. Welding Procedure Specifications (WPSs) shall be submitted to the Engineer, for approval, prior to the start of fabrication.

Prior to fabrication the Contractor shall submit a Quality Control Plan (QCP) and fabrication drawings that are acceptable to the Engineer. Any work started prior to receiving approved drawings WPSs, and a QCP, shall be subject to 1512. The Contractor shall also give the Engineer at least 5 working days' notice prior to beginning work so that Quality Assurance (QA) inspection may be provided.

All metal railing will be inspected by the Engineer. The purpose of the inspection(s) is to establish compliance with the Contract Documents. The shop inspection(s) is not intended to supplement or replace the Contractor's own Quality Control (QC). The Contractor is ultimately responsible for the correction of errors and faulty workmanship or for the replacement of nonconforming materials.

All parts of the fabrication are to be visually inspected and the inspections are to be documented by the Contractor's QC personnel. Any Nondestructive Testing required by the Contract Documents shall be performed and documented by an ASNT-TC-1A Level II qualified inspector.

Parts found to be in nonconformance shall be documented by using a Nonconformance Report form (NCR). The NCR shall describe in detail the fabrication error and the proposed repair procedure(s) in accordance with the QCP. Repair(s) performed shall be subject to the written approval of the Engineer.

E. Coating Requirements

All railing material shall be galvanized in accordance with 3394 after fabrication and painted (Duplex Coated) using the applicable provisions of 2478. The primer coat shall not be used on galvanized surfaces. The color of the finish coat shall match Federal Standard 595 c No. 27038 (Black) and have a semi-gloss finish.

Pre-Galvanized Procedure(s):

1. Calibrate dry film thickness gages in accordance with SSPC-PA 2-Measurement of Dry Coating Thickness with Magnetic Gauges.

2. Prepare all fabricated material surfaces by abrasive blast cleaning to a minimum of SSPC-SP 6/NACE No. 3-Commercial Blast Cleaning, prior to galvanizing.

3. Purchase Order(s) shall inform the galvanizer as to which specific items are going to be duplex coated so that they may comply with any additional cleaning required to meet the "Post Galvanizing Procedures", and, as necessary, meet the visual requirements of aesthetic, ornamental products. The galvanizer shall also be informed which materials, to be galvanized, are reactive (e.g. 3309, etc.).

Galvanizing Procedure(s):

1. All metal railing to be galvanized will be processed utilizing a "dry" kettle. The metal railing shall be prefluxed prior to the galvanizing bath using an aqueous tank of zinc chloride/ammonium chloride. The use of a "top flux" blanket on the molten zinc bath will not be permitted.

2. Air cool the metal railing to ambient temperature before handling for shipment and/or storage. Do not quench the metal railing or apply any post-galvanizing treatments.

3. Lumps, projections, globules, or heavy deposits of zinc, which will interfere with the "intended use of the product", will not be permitted. Damage to the galvanized zinc coating resulting in uncoated "black" and/or bare areas, blisters, flux deposits, and dross inclusions will also be considered unacceptable. Galvanized material that does not meet the requirements of 3394, shall be repaired in accordance with the methods described in ASTM A780. Required repair(s) may be subject to written approval of the Engineer. "Intended use of the product" shall be defined as surface conditions that, when painted, will produce acceptable aesthetic and/or visual qualities.

4. Galvanized metal railing shall be stored in a manner that will prevent the formation of "white-rust" or wet storage painting. "White rust" or staining of the galvanizing is not acceptable. A written repair procedure shall be subject to the approval of the Engineer. All repairs shall be performed at no expense to the owner.

5. The galvanizer shall provide the Engineer with all galvanizing process-related Quality Control documents prior to shipment of the galvanized product. These documents shall include the following: coating material certifications, visual examinations, and coating thickness examinations.

6. The galvanized metal railing shall have a straightness tolerance of 3 mm in 3000 mm (**1/8 inch in 10 ft**), prior to any subsequent paint applications. Any galvanized metal railing not meeting this tolerance shall be straightened.

7. It is the galvanizer's responsibility to provide the Engineer with advanced notification of at least 5 working days of intent to ship so that the Engineer can perform a Quality Assurance audit.

Post Galvanizing Surface Preparation:

1. Prepare of the galvanized surfaces for painting in accordance with SSPC SP16 and ASTM D6386.

Paint Application:

1. Surface cleaning shall be by the solvent cleaning method and surface preparation shall be performed by sweep blasting.

2. All sweep blasted galvanized railing shall be coated with the subsequent coat(s) within the time frame defined in ASTM D 6386, Sect. 5.4.1, or within the same 8-hour shift, maintaining manufacturer defined control and environmental conditions. The Contractors QC personnel shall document that all parameters were followed.

3. All coating material shall be applied in accordance with the contract documents and the manufacturer's Product Data Sheet (PDS) and application guides for the material and system specified.

4. Coating material(s) shall meet the requirements of 3520. The color of the intermediate coat shall present a distinct contrast from other applied coatings.

5. QC Inspections of all coated products shall be accomplished by an observer with normal color vision, in a "well lighted" area, during each coating phase and prior to final acceptance.

"Well-lighted" shall be defined as a minimum of 50 foot candles of artificial light or natural daylight. A light meter with readings in foot candles shall be used to verify the adequacy of the lighting.

Handling and Shipping of Coated Metal Railing:

All completed, fabricated, and coated metal railing shall be protected during handling, and shipping, to prevent any damage to the coating(s). Coated metal railing shall not be moved or handled until the coating has cured, but in no case sooner than recommended by the coating manufacturer.

Metal railing may be padded to protect it from direct contact with wood, steel, or other packaging materials that could scratch, mar or otherwise damage the final coated railing finish. Softeners may be used in conjunction with high-density foam or other acceptable packaging materials at all points of contact.

Storage of Coated Metal Railings:

All completed coated metal railing shall be stored in accordance with 1606 and the following:

1. All railing shall be clearly tagged/piece marked by the fabricator prior to final storage. Identification markings shall include, as a minimum: individual piece marks, bridge and/or project number(s), fabricator and applicator job numbers. All marking(s) shall not be visible to the public when the railing is in its installed position. The method of identification shall be included in the fabricators QCP.

2. It is the Contractors responsibility to provide the Engineer with advance notification of at least 5 working days of intent to ship, so that the Engineer can perform a QA audit prior to shipping.

F. Construction Requirements

Provide the Engineer with a QA/QC plan that will be used to insure that the cast-in-place anchorages are installed in the correct location using templates or other means insuring that the exposed threads of the anchorages will not be damaged or contaminated and that the anchorages will not be displaced or allowed to move during concrete placement.

After the cast-in-place anchorages have been installed in the forms, but prior to placing the barrier concrete, the contractor shall provide written documentation verifying that all of the anchorages are within the necessary tolerances to place the tubular railing without modifying the railing base plate configuration.

The steel posts shall be adjusted to obtain the grade and alignment as shown in the Plans by one of the following methods:

1. The steel posts shall be shimmed with steel shims or washers to the proper grade and alignment, not to exceed 6 mm (**1/4 inch**) of shim height. Before attaching the nuts, coat the surface between the base plate and concrete rail with an approved silicone caulk. Tighten the anchor rod nuts (as per section "C"-Anchorages) and neatly smooth the caulk around the perimeter of the railpost base plate.

2. The anchor rods shall have leveling nuts threaded on them and turned down to the base of the anchor rods. The rails shall be installed and the steel posts set to the proper grade and alignment by adjusting the leveling nuts. Install the top nuts and tighten them firmly to the base plate. The space between the base plate and the concrete shall be filled and neatly finished with grout that is approved by the Engineer.

Ground all metal railings. Install all electrical grounding in accordance with the applicable provisions of MnDOT specification 2557 and the National Electrical Code. Clamp or braze the ground wires to the grounding device, then practicably route and attach to the nearest rail by clamping, brazing, or any other approved means that will provide a permanent positive connection. If rail has non-continuous sections, use a #6 AWG solid copper wire to connect adjacent railing panels.

If the bridge does not include exposed electrical equipment, then ground the rails at points directly below or adjacent to the railing at all abutment corners. The grounding system will consist of a #6 AWG solid copper wire connected to the railing which in turn is connected to a copper coated steel rod having a nominal diameter of 15 mm (**5/8 inch**) or more and a minimum length of 2.4 m (**8 feet**) installed to an elevation approximately flush with the ground surface.

If the bridge includes exposed electrical equipment, such as roadway lighting, traffic signals, variable message signs, surveillance cameras, or ramp metering, then bond the railing grounding system to the exposed electrical equipment grounding system. Refer to the electrical plans and electrical special provisions for details regarding bonding multiple electrical grounding systems.

G. Repairs of Coated Steel Railings:

Any damaged coated surfaces, identified through either Quality Control or Quality Assurance inspections as being unacceptable, either after the application of the paint or after shipping and handling, shall be subject to the provisions of 1512.

H. Method of Measurement

Measurement will be by length in **feet** based on Plan dimensions between the outside ends of metal railings (with deductions for the lengths of concrete posts).

I. Basis of Payment

Payment for Item No. 2402.583 "ORNAMENTAL METAL RAILING TYPE SPECIAL 1", "ORNAMENTAL METAL RAILING TYPE SPECIAL 2", and ORNAMENTAL METAL RAILING TYPE SPECIAL 3" will be made at the contract price per **foot** and shall be compensation in full for all costs of fabrication, galvanizing, surface preparation, painting, delivery, and installation, as described above. Failure to comply with any of these requirements will result in rejection of the material and/or reduction in payment.

SB-8 <u>(2405) PRESTRESSED CONCRETE BEAMS</u>

The provisions of MnDOT 2405 are modified and/or supplemented with the following:

Delete the first paragraph of 2405.3M and substitute the following:

Prestressed concrete beams shall be erected in a manner that will provide safety to the workers, inspectors, and the public, at all times, as well as reasonable assurance against damage to the prestressed members. Prior to the placement of diaphragms, the prestressed beams shall be temporarily anchored, braced, and stabilized as they are erected so as to preclude sliding, tipping, buckling, or other movement that may otherwise occur. If active vehicular or railroad traffic will be permitted to travel beneath beams prior to complete erection of all the beams and diaphragms in a span, the Contractor shall submit an erection plan prepared by an engineer, thoroughly checked by a second engineer for completeness and accuracy, and certified by one of the aforementioned professional engineers licensed in the State of Minnesota which details all temporary works necessary to brace and stabilize beams. Struts, bracing, tie cables, and other devices used for temporary restraint shall be of a size and strength that will ensure their adequacy. The Contractor shall arrange the work schedule so that each beam will be connected to an adjacent beam and at least two adjacent girders will be erected (including diaphragms and bolts fully tightened) and braced and stabilized in any one span before operations are suspended for the day.

Add the following immediately before the last paragraph of 2405.3M:

Threaded rods used to attach prestressed concrete beams to cast-in-place concrete diaphragms shall either be galvanized per MnDOT specification 3392 or electroplated in accordance with ASTM B633, service condition SC4.

SB-8.1 Prestressed Concrete Fabricator Certification

The Fabricator's quality control office shall maintain documentation containing the data required by the specifications and the State Materials Engineer. This documentation shall contain test data and measurements taken at times and locations approved by the Engineer, assuring that monitoring, by personnel not directly involved in production, is sufficient to ensure compliance with approved procedures.

If the Engineer's review of fabrication work discloses that approved procedures are not being followed, the Fabricator shall immediately correct the procedure.

The Engineer will determine what additional testing work must be done by the Fabricator or, if necessary, what part of the work must be repaired or replaced if fabrication work is not properly monitored and documented by the Fabricator.

Any and all costs of required additional monitoring and testing shall be at the expense of the Contractor with no additional compensation.

SB-8.2 Steel Intermediate Diaphragms

In lieu of providing the steel intermediate diaphragm shown in detail B403 of the plans, the Contractor may substitute a bent plate diaphragm. The bent plate diaphragm shall be made of 8 mm (**5/16"**) thickness plate bent as shown in detail B402 of MnDOT Bridge Details Manual. The minimum depth for diaphragm shall be dimension "C" shown in B403; minimum flange width shall be 125 mm (**5"**).

SB-8.3 Prestress Transfer

The Fabricator of prestressed concrete beams shall closely monitor the ends of the beams during the strand release process. The following sequence of releasing the individual prestressing strands will be required if cracks occur in the ends of the beams during the fabricator's releasing sequence.

Delete the first sentence of the second paragraph of 2405.3H.

Add the following to 2405.3H:

Prestress transfer shall be conducted in a sequential and alternating manner symmetrical to the vertical axis of the beam in order to minimize the lateral eccentricity of the prestress forces and diminish cracking of the concrete. The sequence of individual prestressing strand release shall be in accordance with the following criteria unless different criteria are approved by the Engineer.

1) Beginning with the *straight* strands closest to the vertical axis of the beam and in the second row from the bottom of the beam, release the strands each side of center. Move two columns away from this column in the same row and release the strand on each side of the center. Then proceed to the outermost strands in this row and release the strand on each side of the center. Repeat the sequence for the third and subsequent rows from the bottom upward until approximately one-fourth of the straight strands have been released.

2) Release approximately one-half (+/- one strand) of the *draped* strands alternating about the vertical axis, starting from the bottom.

3) Release the hold-down anchors for the draped strands.

4) Release the remainder of the *draped* strands alternating about the vertical axis.

5) Release the remainder of the *straight* strands beginning with the strand in the bottom row nearest the vertical axis. The strands are released alternating each side of the center. Release all the strands in that column moving upward. Proceed two columns away from this column and release the strands bottom to top alternating each side of the center. Next, move to the outer most column and release strands bottom to top continuing to alternate each side of the center. The remainder of the strands shall be released bottom to top starting with the inner most column alternating each side of the center.

Once release has started, all strands of that beam shall be released in the sequence described above even if cracking is noticed near the end of the beam. The Engineer shall be notified immediately of any cracking and no other beams with the same strand pattern may be fabricated until the Engineer has approved a revised release sequence.

SB-9 <u>(2451) STRUCTURE EXCAVATIONS AND BACKFILLS</u>

The provisions of MnDOT 2451 are modified and/or supplemented with the following:

SB-9.1 Structure Excavation

The item Structure Excavation shall include all excavation, sheeting and shoring and/or other protection, preparation of foundation, and placing of backfill, and disposal of surplus material necessary for construction of Bridges No. 19036, which is not specifically included in the grading portion of the Contract. At the abutment, excavate material necessary to construct to finished grade as shown in the "Finished Grading Section" on MnDOT Standard 5-297.233 and 5-297.234.

No measurement for payment will be made for approach surcharge material or select granular modified abutment approach treatment material as part of the structure excavation pay item. Refer to the grading portion of the contract for measurement and payment of these items.

No measurement will be made of the excavated or backfill material that is included in the structure excavation pay item. All work performed as specified above will be considered to be included in a single lump sum for which payment is made under Item No. 2401.601, "STRUCTURE EXCAVATION".

For purposes of partial payments, the portion of the lump sum Structure Excavation at each substructure unit will be defined as follows:

Bridge 19036	Each Abutment	30%
	Pier	40%

SB-10 <u>(2452) PILING</u>

The provisions of MnDOT 2452 are modified and/or supplemented with the following:

Delete the second paragraph of 2452.3H and substitute the following:

Pile welders shall be qualified using AWS D1.1 standards or current MnDOT welding certification.

SB-10.1 Equipment for Driving

Delete the first and second paragraph of 2452.3C1 and substitute the following:

All pile driving equipment to be furnished by the Contractor shall be subject to approval by the Engineer. Approval is based on the satisfactory results of a wave equation analysis.

At least 30 calendar days prior to the start of pile driving operations, the Contractor shall submit the following:

1. A completed pile and driving equipment data form for each hammer proposed for the project. The form may be downloaded from the following website: http://www.pile.com/pdi/users/grlweap/equipdatafrm-en.pdf

2. A wave equation analysis in accordance with GRL WEAP or similar program for each pile type and hammer. A hard copy of the results of the analysis, including a WEAP bearing graph, shall be submitted to the Engineer.

For the pile driving equipment to be acceptable, the required number of hammer blows indicated by the wave equation at 155% of the pile factored design load as shown in the Plans shall be between 30 and 180 blows per foot.

The pile stresses indicated by the wave equation shall be reviewed to determine that the piles can be driven as described in 2452.3D without failure. If stress levels are such that damage to the piling is considered to be likely, adjustments shall be made to the pile driving system or to the strength of the pile until satisfactory results are obtained. Substantial refusal is defined in subsequent paragraphs.

All costs associated with providing the wave equation analysis and submittals as described above shall be an incidental expense to the test piles and no additional compensation will be made for this work.

SB-10.2 Penetration and Bearing

Delete 2452.3E and substitute the following:

A. General

The nominal pile bearing resistances shown in the Plans were calculated using design loadings and indicate the factored loads that the piles are required to support. The nominal resistance determined using the dynamic methods, defined under Determination of Nominal Bearing Resistances, is the basis for establishing the minimum criteria for pile acceptance in which the driving resistance is not less than the resistance specified in the Plans. It may be necessary to drive the foundation piles beyond the specified resistance until the required penetration as shown in the Plan is reached, or until the piles have been driven to a penetration as determined by the engineer based on the test pile results.

Since the purpose of a test pile is to provide information for authorizing the length of the foundation piles, it shall be driven full length unless substantial refusal (as defined below) is encountered at a lesser penetration. If the test pile has been driven full length and 115% of the nominal resistance required for the foundation piles has not been attained the Engineer may order the test pile be driven further as per 2452.3D2 and 2452.4A. If pile redriving is specified in the Plan, the penetrations and time delays shall be in accordance with 2452.3D7 and/or these special provisions.

Substantial refusal, as referenced in 2452.3D, shall be considered to have been attained when the penetration rate is equal to 0.05 inches per blow.

B. Determination of Nominal Bearing Resistance

The required nominal resistance shown in the Plans is based on a field control method as noted. The driven pile nominal resistance shall be determined in accordance with the following provisions using the appropriate corresponding field control method indicated in the Plans. Unless otherwise specified, if more than one field control method is shown, the method used shall be determined in accordance with the following:

- When the "Pile Analysis" pay item is included for a bridge, the Pile Driving Analyzer (PDA) shall be required for the field control.

- When the "Pile Analysis" pay item is <u>not</u> included for a bridge, the field control method shall be at the Contractor's option. The cost of the PDA shall be incidental to the cost of Piling Driven.

B1. MnDOT Nominal Resistance Pile Driving Formula Used as Field Control Method

The nominal pile bearing resistance shall be determined by dynamic formula as follows:

All types of piling driven with power-driven hammers.

$$R_n(metric) = \frac{867E}{S+5} x \frac{W+(CxM)}{W+M} \qquad R_n(english) = \frac{10.5E}{S+0.2} x \frac{W+(CxM)}{W+M}$$

WHERE:

R_n = Nominal Pile Bearing Resistance in Newtons (**pounds**).
W = Mass of the striking part of the hammer in kilograms (**pounds**).
H = Height of fall in millimeters (**feet**).
S = Average penetration in millimeters (**inches**) per blow for the last 10 or 20 blows, except in cases where the pile may be damaged by this number of blows.
M = Total mass of pile plus mass of the driving cap in kilograms (**pounds**).
C = 0.1 for Timber, Concrete and shell type piles, 0.2 for Steel H piling

*The following definition is for Metric units. See English units below:

E = WHx0.00981 for single acting power-driven hammers. It is equal to the joules or newton-meters (joule = newton-meter) of energy per blow for each full stroke of either single acting or double acting hammers as given by the manufacturer's rating for the speed at which the hammer operates.

*The following definition is for English units:

E = WH for single acting power-driven hammers. It is equal to the foot pounds of energy per blow for each full stroke of either single acting or double acting hammers as given by the manufacturer's rating for the speed at which the hammer operates.

NOTES:

When provisions are not made available for field determination of the energy output on a power-driven hammer, such as measurement of the drop for single-acting hammers, or such as pressure gauges or determination of energy on the basis of the frequency of the blows (cycles per minute) for double-acting hammers, the manufacturer's rated energy shall be reduced by 25 percent. This reduction is not intended to apply when determining the required hammer size. Double-acting hammers, for the purpose of these requirements, will include all hammers for which a power source is utilized for acceleration of the down-stroke of the ram. The dynamic formula specified herein-before are applicable only when:

(a) The hammer has a free fall.
(b) The head of the pile is free from broomed or crushed fibre.
(c) The penetration of the pile is at a reasonably uniform rate.

(d) There is not noticeable bounce after the blow. When there is a noticeable bounce, twice the bounce height shall be deducted from H to determine the value of H in the formula.

B2. Pile Driving Analyzer (PDA) Used as Field Control Method

The nominal pile bearing resistance shall be determined using the pile driving analyzer and the Case Pile Wave Analysis Program (CAPWAP) in accordance with the following section, Dynamic Monitoring of Pile Driving. The WEAP bearing graph listed below under deliverables shall be used to determine the bearing resistances that are recorded on the pile driving report (attach a copy of the bearing graph to the report). For informational and comparison purposes, the bearing resistances shall also be computed using the MnDOT formula and recorded on the report.

B3. Piling Supporting Concrete Retaining Walls

The nominal pile bearing resistances shown on MnDOT Standard Concrete Retaining Wall Sheets (MnDOT Standard Figures 5-297.620 through 5-297.632 dated May 31, 2006) were calculated using the Allowable Stress Design (ASD) Method, Not the LRFD method. If dynamic formulas are used to determine pile resistance for concrete retaining walls in the field, follow MnDOT specification 2452.3E as detailed in the 2005 Standard Specifications for Construction in lieu of 2452.3E-A and 2452.3E-B1 shown above. Do not use the formulas shown above to compute pile capacities for concrete retaining walls. For retaining wall plan sheets dated later than May 31, 2006 the inspector must confirm which dynamic formula to use.

SB-10.3 Dynamic Monitoring of Pile Driving

A. Description of Work

The Contractor shall provide all equipment and personnel necessary to perform dynamic pile testing of driven piles using a Pile Driving Analyzer (PDA). The work shall be performed in accordance with the requirements of ASTM 4945. The dynamic pile testing shall be performed on the initial driving and redriving of the test piles as directed by the Engineer. Testing may also be required on additional piles as designated by the Engineer.

B. Pile Preparation and Wave Matching

The Contractor shall prepare each pile to be tested by attaching instrumentation to the piles except that for testing on initial driving of steel shell piles, the Contractor shall attach the instrumentation after the pile has been placed in the leads. In addition, the Contractor shall perform wave matching of the PDA data using the Case Pile Wave Analysis Program (CAPWAP). This work shall be performed by an engineer experienced in dynamic testing and CAPWAP analysis. The program shall be run on all piles dynamically tested, or as directed by the Engineer.

C. Wave Equation Analysis

Following the wave matching, the Contractor shall use the GRLWEAP program and CAPWAP data to produce a refined Wave Equation Analysis Program (WEAP) bearing graph and inspector's chart to be used as the basis for pile acceptance. The bearing graph shall be used to determine the foundation pile's nominal bearing resistance that is to be recorded on the pile driving report. The wave matching analysis and wave equation analysis shall be performed in a timely manner.

D. Deliverables

The Contractor shall provide the following items to the Engineer within the specified time intervals described herein:

1. Results from each dynamic test performed with the PDA and checked with the CAPWAP program. The results shall be in the form of a hard copy of columnar data produced with the PDAPLOT program. The data shall consist of blow counts, stresses in the pile, pile capacities, hammer energies and hammer strokes for each one foot (0.25 meter) depth increment. The results shall be provided in a timely manner. In addition, the Contractor shall provide expert advice regarding the analysis of the PDA and CAPWAP data.

2. A WEAP bearing graph and inspection chart showing blow count-versus-pile resistance and stroke-versus-blow count that will be used for determining the nominal bearing resistance of the foundation piles. The graph/charts shall be developed based on the results of the PDA and CAPWAP data. Both the maximum force and maximum transferred energy calculated by WEAP shall match within 10% of those calculated by the CAPWAP. The bearing graphs shall be delivered to the Engineer within two days after completion of driving the test piles at any single substructure unit. These graphs/charts shall also be documented in the appropriate reports listed below.

3. A brief report for the piles at each substructure tested including a summary of the PDA and CAPWAP results. In addition, the Contractor shall supply one or more 3.5 inch diskettes or CD containing all data for the piles tested for that substructure. The data shall be in the form of X01 (PDA file) and Q00 (PDAPLOT file) files and shall be properly labeled. These reports shall be sent to the Engineer no later than three working days after dynamic pile tests have been completed at any given substructure unit.

4. A PDA summary report which summarizes the findings from the PDA and the associated CAPWAP computer program and the developed GRLWEAP bearing graphs. This report shall be sent to the Engineer no later than one week following the completion of the dynamic pile tests, addressed separately.

E. Measurement and Payment

The Pile Driving Analyzer field control method is not required by the Contract. If the Contractor chooses to use the PDA, no measurement will be made of the analyses performed and all costs associated with the dynamic testing will be at the Contractor's expense.

SB-10.4 Substitution for Steel H-Piling Prohibited

Substitution of thick wall pipe for steel H-Piling will not be permitted on Bridge No. 19036.

SB-11 (2471) STRUCTURAL METALS

The provisions of MnDOT 2471 are modified and/or supplemented with the following:

Delete the fourth paragraph of 2471.3A2 and substitute the following:

The Contractor/Fabricator performing coating application must demonstrate qualification by obtaining the AISC Sophisticated Paint Endorsement (SPE), the SSPS QP Certification, or a Quality Control Plan (QCP) that is acceptable to the Engineer.

Add the following to the end of the second paragraph of 2471.3C:

The Engineer will audit suppliers with approved QCP's on a biannual or annual basis or as deemed necessary by the Engineer to determine if the QCP is being implemented. The Department will invoke its Corrective Action Process if the audit indicates non-conformance. Corrective action, up to and including the supplier hiring a third party Quality Control Inspector, may be required as a disciplinary step, at no cost to the Department. A copy of the Departments Corrective Action Process is available from the Engineer.

Add the following to 2471.3E1 as the first paragraph:

Steel plates and splice plates for major structural components shall be cut and fabricated so that the primary direction of rolling is parallel to the direction of the main tensile or compressive stresses.

Add the following to 2471.3F:

F1b Web-to-Flange Welds

For the purpose of this specification, a repair is defined as any area of the welded product not in compliance with the current edition of AASHTO AWS D1.5 Bridge Welding Code. Limit each individual web-to-flange weld repairs to 2 percent of the weld length and grinding web-to-flange weld repairs to 5 percent of the weld length. Exceeding these limits will result in revocation of the Welding Procedure Specification (WPS) used to perform the initial production welding.

Add the following as 2471.3G1:

G1 Fracture Critical Welder Qualifications

Fracture Critical Welder Qualifications shall be in accordance with AASHTO/AWS D1.5-Bridge Welding Code. Annual requalification shall be based upon acceptable radiographic test results of either a production groove weld or test plate. If a welder is requalified by test, a WPS written in accordance with the requirements of D1.5, shall be used and the test plate shall be as shown in Figure 5.24. The WPS shall be included in the Fabricators QCP.

Add the following to 2471.3N1:

Work that is not performed in accordance with the suppliers approved QCP shall be subject to rejection in accordance with 1512.

SB-12 CONDUIT SYSTEMS

Each Conduit System shall be furnished and installed in accordance with the Plans, approved erection drawing, the applicable requirements of 2545, 2550, 2565 and the following:

All conduit runs shall be straight and true and all offsets and bends shall be uniform and symmetrical. The Contractor shall adjust the elevations of the conduit assembly, for its full length, to approximately the same gradient as the finished roadway, and s/he shall furnish and install in the approaches such suitable spacers and framing as may be necessary to maintain the correct grade and alignment.

Ferrous components of fittings shall be hot dip galvanized. All fittings shall be carefully installed according to the manufacturer's recommendations and at the locations shown in the Plans. At time of installation, adjacent conduit sections to be coupled by fittings shall be in true alignment.

Fabrication and inspection of structural metals used for each Conduit System shall be in accordance with the applicable requirements of 2471.

The ends of conduits shall be identified as lighting, signals, telephone, telegraph, power, etc. by the use of embossed metallic tags or other equally durable identification.

Non-metallic conduit and fittings shall conform to the requirements of the NEMA Standards Publication No. TC 14, entitled "Filament-Wound Reinforced Thermosetting Resin Conduit and Fittings."

Three sets of erection drawings of each Conduit System shall be furnished to the Engineer for preliminary review. Two sets will be forwarded to the Bridge Construction and Maintenance Engineer for review and one set will be returned to the Contractor showing any necessary corrections.

The drawings shall be to a scale of not less than 50:1 (**1/4" = 1'-0"**) and shall show the locations of the diaphragms and inserts, a conduit placement scheme, and detailed views of the placement of the sleeves through the parapets, end webs, and diaphragms. The locations of the sleeves shall be defined from established reference points or lines and elevations, such as working points or centerlines and bridge seat elevations. The locations and manufacturer of expansion fittings shall be shown in the drawings.

Concrete inserts for hanger assemblies shall be spaced in such a manner that the assemblies will not interfere with conduit couplings. Hanger spacing shall not exceed 3 meters (**10 feet**). Conduit shall be installed in 3 meter (**10 foot**) lengths where practicable.

Each expansion fitting shall be in accordance with 3839, except that the fitting shall provide for greater than 100 mm (**4 inch**) linear movement when required by the Plans.

A combination expansion/deflection fitting shall consist of an expansion fitting and an expansion/deflection fitting connected by a nipple. The expansion fitting shall be in accordance with 3839, except that the fitting shall provide for greater than 100 mm (**4 inch**) linear movement when required by the Plans. Each expansion/deflection fitting shall be an approved watertight unit which can accommodate 20 mm (**3/4 inch**) of linear expansion or contraction of conduit, 20 mm (**3/4 inch**) of parallel misalignment of adjacent conduit sections, and up to 30E of angular misalignment of the axes of adjacent conduit sections. To prevent damage to internal bonding jumper, fittings should not be twisted during installation.

The Contractor shall seal any remaining conduit opening at the back face of each abutment with an approved sealant after the conduit is in place.

All sidewalk or flush mounted junction boxes shall be removable flange (NEMA 5) galvanized cast iron with checkered cast iron covers. These junction boxes shall be equipped with 13 mm (**1/2 inch**) diameter pipe drains. Each conduit entrance and the pipe drain entrance shall be bossed and threaded to provide five full threads. The cover and flange shall be fastened with stainless steel screws. The cover shall have pry bar slots and shall be equipped with a neoprene gasket.

Each junction box conduit entrance shall include an insulating bushing of the appropriate size.

SB-13 LOOP DETECTORS

This work consists of furnishing, installing and testing of loop detectors to be cast into the bridge deck concrete on Bridge No. 19036 for traffic control signals. The work shall be performed in accordance with the applicable requirements of MnDOT and 2565.3G, the current edition of the National Electrical Code, MnDOT Standard Plate No. 8132B, the Plans, as directed by the Engineer, and the following:

SB-13.1 General

The loop detector locations are shown on the Bridge Plan and on the Traffic Control Signal System B Layout plan sheet. The exact location of the loop detectors shall be verified by MnDOT Traffic office personnel. Contact Mike Dittel, MnDOT Metro Traffic Operations. He can be reached at 1500 West County Road B2, Roseville, Minnesota. Phone: 651-775-9493. E-mail: michael.dittel@state.mn.us.

SB-13.2 Materials

A. Loop Detector Splices

The Contractor shall furnish and install qualified loop detector splice kits.

The qualified splice kits may be found at the Office of Traffic, Security, and Operations (OTSO) WEB site under the Qualified Products List.

http://www.dot.state.mn.us/trafficeng/designtools/index.html

The Contractor shall install loop detectors splices according to the manufacturer's instructions.

SB-13.3 Construction Requirements

A. Installation

At the locations shown in the Plans, attach each loop detector assembly, including lead-in, to the bottom of the top reinforcement bar mat with plastic coated tie wires at each intersection of a bar and the loop detector conduit. Connect the conduit for the lead-in cable to the appropriate junction box suspended below the deck as shown on the Conduit System (Signals) Plan sheet. The connection to the junction box shall be made with proper adapters and fittings to form a moisture-proof seal. To prevent intrusion of moisture before the loop conductors are connected to the signal system, tape the free ends of the leads with rubber tape inside of the junction boxes. Installation of loop detectors shall be to the satisfaction of the Engineer.

Loop detector lead-in cables (from the traffic signal controller cabinets to the appropriate junction boxes) and loop detector splice encapsulation kits (for connecting loop detector conductors in the roadway to the loop detector lead-in cables) shall be furnished and installed as part of the pay item for Item No. 2565.511 (TRAFFIC CONTROL SIGNAL SYSTEM A) and Item No. 2565.511 (TRAFFIC CONTROL SIGNAL SYSTEM B), and are thus not included as part of the pay item for Item No. 2565.602 (NMC LOOP DETECTOR 6' x 6'). See Division SS (Traffic Control Signals) for further information.

B. Testing

After installation and before the concrete deck is poured, the Contractor shall test each loop detector to demonstrate, to the satisfaction of the Engineer, that the materials and installation of each loop detector are in accordance with the requirements of the Plans and these Special Provisions. The Contractor shall provide, without cost to the Department such electrical instruments, apparatus, tools, and labor as may be necessary to make the required loop detector tests on each loop detector. Such electrical instruments, apparatus, and tools shall remain the property of the Contractor after the tests are completed.

The Contractor shall furnish to the Engineer, in triplicate, a signed and dated "LOOP DETECTOR TEST REPORT" for each loop detector furnished and installed—under the bridge portion of the Contract--with the following information:

1. State Project Number and Intersection.

2. Loop Detector Number (as directed by the Engineer), Dimensions of Loop Detector (Length and Width in feet) as installed, and Number of Turns of Wire in Loop Detector as installed.

3. CONTINUITY TEST --- The loop detector shall be tested for continuity at the junction box prior to splicing with the loop detector lead-in cable (shall have a value less than 0.5 ohms.)

4. INDUCTANCE TEST --- The loop detector shall have an inductance test measured at the junction box (shall have a value greater than 50 microhenries.)

5. INSULATION RESISTANCE TEST --- The loop detector shall have an insulation resistance test at high voltage measured at the junction box (shall have a value greater than 100 megohms.)

In the event that the a loop detector "fails" any one of the above-mentioned loop detector tests, the Engineer may direct the Contractor to replace any part of or the entire loop detector, all at the Contractor's own expense (NO Supplemental Agreement will be written for replacing any part of or the entire loop detector.) All of the above-mentioned loop detector tests shall be repeated and recorded for the "revised" loop detector.

Each loop detector furnished and installed as part of this Contract shall "pass" the above-mentioned loop detector tests. These tests shall not preclude the Department from testing each loop detector with their own test equipment to ensure proper operation.

The three final loop detector test reports shall be distributed by the Engineer as follows:

1. Original report to the official Project file.
2. Copy in cabinet (furnished and installed under the Signal portion of the Contract.)
3. Copy to the Metro District Traffic Signal Operations Engineer.

SB-13.4 Method of Measurement

Each loop detector assembly will be measured as an integral loop complete inplace and ready for operation.

SB-13.5 Basis of Payment

Payment for Item No. 2565.602 "NMC LOOP DETECTOR 6' x 6' " will be made at the Contract price per each which shall be compensation in full for all costs incidental thereto. This item includes the following:

1. NMC conduit and conduit fittings for loop detectors.
2. NMC conduit from loop detector to junction box including necessary adapters and fittings for junction box.
3. Loop detector conductors extending to junction box
4. Loop detector installation in the bridge deck.
5. Loop detector testing and reporting.

SB-14 <u>(3372) STEEL PILING</u>

The provisions of 3372.2 shall apply except as modified below:

The first paragraph of 3372.2 is hereby deleted and the following substituted therefore:

Steel H-piles shall be bearing sections of the size and mass per unit of length specified in the Plans and shall conform to ASTM A572M/**A572**, Grade 345 (**50**) for carbon steel shapes of structural quality.

SB-15 <u>(3385) ANCHOR RODS</u>

The provisions of 3385 shall apply except as modified below:

Add the following to 3385.2:

Anchorages supplied under this specification must be pre-approved by the MnDOT Laboratory and the certification from the MnDOT Laboratory must not be more than one year old. The Contractor must furnish the Engineer a copy of the MnDOT approval letter for the source, size and grade of anchorages specified in the plans and also a certification stating that anchor bolts of the size and grade specified were manufactured and tested in accordance with ASTM F 1554 (e.g. heat analysis and heat number, tensile tests, zinc coating weight and thickness, etc.).

SB-16 (3391) FASTENERS

Delete the contents of 3391.2B and substitute the following:

Provide field and shop bolts for steel bridges meeting the requirements of ASTM A325, Type 3 bolts. Provide bolts that project through the nut not less than ⅛ in (**3 mm**) nor more than ⅜ in (**10 mm**). Provide field and shop nuts for steel bridges that meet ASTM A 563/A 563M, Grade C3 or DH3 nuts and shop washers for steel bridges that meet ASTM F436/F 436M, Type 3 washers.

Provide bolts, nut, and washers that will be completely installed before application of the prime coat, in the uncoated "Black" condition. The bolts are to receive the same paint coatings as the structural steel. Provide mechanically galvanized fasteners that are to be field installed after the application of the prime coat, in accordance with ASTM B 695, Class 50, Type 1.

For all other bridges and structures, provide bolts that meet ASTM A 325, Type 1 (for painted and/or galvanized applications) or Type 3 (for unpainted weathering steel applications). Provide bolts that project through the nut no less than ⅛ in (**3 mm**) or more than ⅜ in (**10 mm**). Provide nuts that meet ASTM A 563/A 563M and washers that meet ASTM F 436/F 436M.

Bolts meeting ASTM A 325 may only be retightened once.

At the time of installation of fasteners, lubricate all nuts regardless of their specified finish with a lubricant of contrasting color as per ASTM A 563 Supplementary requirements S1, S2, and S3.

SB-16.1 Delete the first two sentences of 3391.2E and add the following:

Provide stainless steel bolts made of material meeting the requirements of ASTM F 593, for Condition CW1, Type 304, Type 316, or Type 316L. Provide finished bolts with the following characteristics:

(1) A yield strength of at least 60,000 psi [**415 MPa**],
(2) An ultimate tensile strength of 95,000 psi [**660 MPa**], and
(3) A minimum elongation of 20 percent in 2 in [**50 mm**].

Provide stainless steel nuts made of material meeting the requirements of ASTM F 594, Condition CW1, Type 304, 316, or 316L.

SB-17 (3741) ELASTOMERIC BEARING PADS

Apply the provisions of 3741 except as modified below:

Replace the first sentence in 3741.2A with the following:

Provide elastomer for bearing pads meeting the requirements of AASHTO M 251 with durometer hardness of 60 ±5 on the Shore "A" scale. Provide elastomer compounds classified as low-temperature Grade 4 meeting the grade requirements of AASHTO *LRFD Bridge Design Specifications*, Table 14.7.5.2-1, "Low temperature Zones and Minimum Grade of Elastomer."

Delete all of 3741.2B1 except for the last paragraph.

Utilize cotton-duck bearing pads (CDP) where standard details B310 and B354 are used. Test and manufacture CDP in accordance with Military Specification MIL-C-882E, except where superseded by the current AASHTO LRFD Bridge Design Specifications Article 14.7.6.2 or by Memo to Designers (2012-01). For CDP, provide elastomer compounds classified as low-temperature Grade 3.

INDEX TO DIVISION SL

SECTION NO.	ITEM	PAGE NO.
SL-1	(1802) Qualification of Workers	1-SL
SL-2	(2545) Electric Lighting Systems	2-SL

I hereby certify that the Special Provisions for lighting construction (Section SL-1 and SL-2) contained in this proposal were prepared by me or under my direct supervision and that I am a duly licensed Professional Engineer under the laws of the State of Minnesota.

Michael Gerbensky, PE

Lic. No. 19863 Date 6-20-12

DIVISION SL
TABLE OF CONTENTS

SL-1 QUALIFICATIONS OF WORKERS 1-SL

SL-2 ELECTRIC LIGHTING SYSTEMS 2-SL

SL-2.1 GENERAL 2-SL

Contractor's Quantities and Cost Break-Down (Lighting) 2-SL
Maintain Street Lighting 3-SL
"As Built Plan" 3-SL
Locating Underground Utilities 4-SL
System Component and Utility Location Data 4-SL
Lighting System Layouts 5-SL

SL-2.2 MATERIALS 5-SL

Shop Drawings 5-SL
Conduit 5-SL
Luminaire Wire Holder 6-SL
Luminaires Without Plug In Igniters 7-SL
Extended Life Lamps 7-SL
Above Ground Splices 7-SL
Above Ground Wiring 8-SL
Direct Buried Lighting Cable formerly "Armored Underground Cable" 8-SL
Leveling Shims 9-SL
Grounding Conductors 10-SL
Light Base (foundation), Design E 11-SL
Equipment Pad B 11-SL
Service Cabinet, Secondary Type L1 (240/480 VAC) 11-SL
Lighting Unit, Type 9-40 ..... 11-SL
Lighting Unit, Type 9D-40 (Dual Davit Breakaway) 12-SL
Splice/Pull Vault 13-SL

SL-2.3 CONSTRUCTION REQUIREMENTS 14-SL

Direct Buried Cable Installation..... 14-SL
Labeling of Lighting Cable 14-SL
Conduit Installation 15-SL
Light Standard Installation..... 15-SL
Light Standard or Light Unit Numbering and Service Cabinet Numbering 16-SL
Wiring in Light Standard Concrete Bases 16-SL
Anti-Seize Lubricant 16-SL
Luminaire and Lamp Labeling 17-SL
Bonding and Grounding 17-SL
Oxide Inhibitor..... 17-SL
Electric Service..... 18-SL
Electric Service Information Form 18-SL
Final Inspection..... 19-SL

SL-2.4 MEASUREMENT AND PAYMENT 19-SL

DIVISION SL

SL-1 (1802) QUALIFICATION OF WORKERS

The provisions of Mn/DOT Specification 1802 are hereby supplemented with the following:

Signal and Lighting Certification will be required for all Contractors, Supervisors or Foreman involved in the field installation of the Traffic Signal and/or Lighting portion of this Project. Signal and Lighting Certification, Level II, is available through the Mn/DOT Technical Certification Program. Questions regarding certification or past certification may be directed to Technical Certification Coordinator at telephone (651) 234-7055.

Certified Contractor personnel shall be on the Project work site at all times to perform or directly supervise the installation, repair or revision of a Lighting System.

SL-2 (2545) ELECTRIC LIGHTING SYSTEMS

This work shall be done under State Project No. 1901-48 and shall consist of furnishing labor, equipment, and materials for construction of a fully operating electric roadway lighting system at the location in the Plan, as specified herein, in accordance with the applicable provisions of Mn/DOT 2471, Mn/DOT 2545, the current National Electric Code, the Plan, and the following:

SL-2.1 GENERAL

A Contractor's Quantities and Cost Break-Down (Lighting)

The Contractor shall submit a completed Contractor's Quantities and Cost Break-Down (Lighting) form in the current Department's version of an electronic Excel spreadsheet. The electronic spreadsheet form will be provided by Metro Lighting Design and delivered to the Contractor by the Engineer at the preconstruction meeting. The Contractor shall submit the completed Contractor's Quantities and Cost Break-Down within fourteen (14) calendar days after the preconstruction meeting.

The Contractor shall submit the electronic spreadsheet containing the completed Contractor's Quantities and Cost Break-Down (Lighting) to the Engineer and the Metro Lighting Design Engineer (Mike Gerbensky, 651-234-7816). Compensation for completing and submitting a Contractor's Quantities and Cost Break-Down for the lighting system shall be included in Pay Item No. 2545.501 (ELECTRIC LIGHTING SYSTEM).

The Contractor shall determine the quantities and cost per unit of material, labor, and equipment to arrive at an estimated cost for each item used in the construction, installation, and/or revision of the Electrical Lighting System [Lighting] for the awarded project. The Contractor shall be responsible for the accuracy of the quantities and values used in the cost break-down submitted for approval.

No adjustment in compensation will be made in the Contract bid lump sum prices due to differences between the quantities in the Contractor's cost break-down and the actual quantities required to complete the work as shown on the Plan and as specified in these special provisions.

The sum of the amounts for the units of work listed in the cost break-down shall be equal to the Contract lump sum price bid for the work. Items such as traffic control, mobilization, etc. shall be included in the cost break-down, except for projects where they are separate pay items.

At the Engineer's discretion, the approved cost break-down may be used to determine partial payments during the progress of the work and as the basis of calculating the adjustment in compensation for the item(s) of Lighting work due to changes ordered by the Engineer. When an ordered change increases or decreases the quantities of a submitted cost break-down item, the adjustment in compensation may be determined, at the Engineer's discretion, in the same manner specified for increases and decreases in quantity of a Contract item in Section 1903, "Compensation for Increased or Decreased Quantities", of the Current Standard Specifications for Construction.

B Maintain Street Lighting

Except during any periods of authorized work suspension, the Contractor shall be responsible for all maintenance of the existing lighting, temporary, and newly constructed lighting systems within the limits of the construction project during the duration of the lighting project and in accordance with the applicable provisions of Mn/DOT 1514. This maintenance shall include: lighting units, luminaires, lamps (after 30% or more of the lamps are burned out), lighting service cabinet(s), photoelectric controls, foundations (concrete or steel), cable, and damage and knockdowns (due to Contractor operations) until final written acceptance of the project by the Engineer (Mn/DOT 1716). This work shall be considered incidental work.

Any damage, that in the opinion of the Engineer, has occurred by someone, other than the Contractors operation, shall be maintained and repaired by the Contractor and will be paid for in accordance with Mn/DOT 1403 (EXTRA WORK).

During any periods of authorized work suspension, the Department will provide and maintain all items of the existing lighting system.

THE CONTRACTOR SHALL FURNISH TO THE DEPARTMENT THE NAMES AND PHONE NUMBERS OF CONTACT PERSONNEL FOR BOTH DAY AND NIGHT OPERATION FOR THE MAINTENANCE OF THE EXISTING LIGHTING SYSTEM.

C "As Built Plan"

The Contractor shall furnish an "as built Plan" that contains any **changes** in the following:

--- Cable locations.
--- Conduit locations.
--- Light pole locations.
--- Feedpoint locations.
--- Splice/Pull Vault locations.

Any discrepancy or additions between the final Plan and how the lighting system was actually built **must be indicated** on the "as built Plan".

The "as built Plan" shall be in a form that is satisfactory to the Engineer. The Contractor furnished "as built Plan" shall be considered incidental work to the lighting system.

D Locating Underground Utilities

The Contractor must adhere to all requirements of Gopher State One Call including the following:

The Contractor is responsible for marking the proposed excavation area by utilizing white markings. The white markings must delineate the **actual excavation area** where the locating of underground facilities is required.

E System Component and Utility Location Data

1. Mn/DOT approval is required when the cable depth requirement in 2545.3G2 needs to be changed.

2. Collect location coordinates for each lighting unit, lighting cabinets, source of power and underground cable installed using a GPS receiver capable of sub-meter accuracy. Location data shall meet the following criteria:

   - The collected coordinates should be accurate to less than one meter.
   - Use a minimum of 5 satellites by the receiver to collect location data.
   - UTM15N or WGS84 are preferred coordinate systems.

   Measure Above ground components from the street side of the asset collected.

   Collect underground cable location no more than 2 weeks after it has been installed. Collect underground cable as line geometry. Capture the vertex points every 100 feet and at every junction or change in cable direction. Depth does not need to be collected unless underground cable is installed outside the depth of 2 feet as specified by 2545.3G2. If depth change has occurred, capture a vertex point before and after the depth change.

   Data that does not meet the above criteria and guidelines may be rejected and the contractor would be responsible to repeat the data collection.

Provide the system component and utility location data in an electronic, standard geospatial vector data format. Obtain Mn/DOT acceptance of the format prior to commencement of field work.

Completing and submitting the system component and utility location data is considered incidental work.

F Lighting System Layouts

The Contractor is directed to the lighting system layouts found at the following website: (link to the lighting system layouts)

http://www.dot.state.mn.us/metro/trafficeng/lighting.html

SL-2.2 MATERIALS

A Shop Drawings

THE CONTRACTOR SHALL PROVIDE SHOP DETAIL DRAWINGS FOR MATERIALS AND ELECTRICAL EQUIPMENT <u>AS SPECIFIED IN THE CONTRACT DOCUMENTS</u>.

B Conduit

The Contractor shall furnish and install either rigid steel conduit (R.S.C.) or non-metallic conduit (PVC) at the locations indicated in the Plans. The size of the conduit shall be as indicated in the Plan. All conduit shall be in accordance with the following:

1. <u>Rigid Steel Conduit (R.S.C.)</u>:

Shall be in accordance with MnDOT 3801.

2. <u>Non-Metallic Conduit</u>:

Shall be in accordance with MnDOT 3803, except as follows:

a. Shall be NRTL listed as being compliant with UL 651B.

b. All references to ASTM F 2160 shall be deleted.

c. Shall be Schedule 80 conduit and fittings for all installations.

d. For HDPE continuous type conduit, all conduit fittings shall be appropriate for use with HDPE continuous length conduit.

e. Shall be capable of being installed by plowing, trenching, or directional boring methods.

f. Shall be either "GREY" or "RED" in color.

g. Shall be marked on the outside of conduit indicating the following:

i. Manufacturer's name
ii. Size of conduit
iii. Type of conduit (HDPE, etc.)
iv. NRTL Certification Mark
v. Any other markings required by the N.E.C.

Before the cables and conductors are installed, non-metallic conduit bell ends (**appropriately sized for the HDPE type conduit**) shall be installed to prevent damage to the cables and conductors

All conduit from concrete foundations to the nearest splice vault shall be either rigid steel conduit (R.S.C.) or rigid non-metallic conduit (PVC**). HDPE continuous length conduit is not allowed for use between concrete foundations and the nearest handhole.**

All conduit installed from the Source of Power (SOP) to the lighting cabinet shall be R.S.C.

3. Ball Locators:

The Contractor shall install Department furnished ball locators at the ends of conduit under the roadway or bridge slope pavement that do not terminate in a splice vault, handhole or lighting service cabinet. The Department will furnish the ball locators to the Contractor at the job site.

C Luminaire Wire Holder

The Contractor shall furnish and install a wire holder that supports the luminaire cable/conductors within the end of the luminaire slipfitter near the connection point of the luminaire.

Mn/DOT approved Wire Holders are listed on the Office of Traffic, Safety, and Operations (OTSO) WEB site under the Lighting Approved Products List.

http://www.dot.state.mn.us/trafficeng/designtools/index.html

D Luminaires Without Plug In Igniters

Provide and install Mn/DOT approved Luminaires without plug in igniters as specified herein and in the Plan.

Mn/DOT approved Luminaires without plug in igniters are listed on the Mn/DOT Approved/Qualified Products Lists WEB site for Lighting:

http://www.dot.state.mn.us/products/index.html

E Extended Life Lamps

The Contractor shall furnish and install Extended Life Lamps in each new luminaire as specified herein and in the Plan. The Contractor shall mark the date of installation on the lamp with a "black oil based paint marker" by striking a line through the month and year and on the porcelain section of the lamp socket base.

Mn/DOT approved Extended Life Lamps are listed on the Mn/DOT Approved/Qualified Products Lists WEB site for Lighting:

http://www.dot.state.mn.us/products/index.html

F Aboveground Splices

Splices shall be in accordance with the provisions of Mn/DOT 2545.3G4. When above ground splices are allowed, the Contractor may substitute approved insulated wire splice connector blocks for the specified "split bolt" connector:

Mn/DOT approved Insulated Wire Splice Connector Blocks are listed on the Mn/DOT Approved/Qualified Products Lists WEB site for Lighting:

http://www.dot.state.mn.us/products/index.html

The Contractor shall apply two layers of protective vinyl electrical tape over the insulated wire splice connector blocks and extend at least one (1) inch over the in coming conductor insulation.

G Above Ground Wiring

Above ground wiring in roadway lighting standards shall be in accordance with Mn/DOT 2545.3G3 and as follows:

The term "14-2 UF" shall be deleted the term "12-2 UF with ground" shall be inserted.

Fuse holders shall be of the breakaway type.

Shall have 6 amp fuses when a 240/480 volt system is installed and 8 amp fuses when a 120/240 volt system is installed.

Mn/DOT approved Fuse Holders are listed on the Mn/DOT Approved/Qualified Products Lists WEB site for Lighting:

http://www.dot.state.mn.us/products/index.html

After the conductors have been crimped to the fuse holder the Contractor shall apply two layers of protective vinyl electrical tape over the breakaway fuse holder in the area where the conductors are crimped to the fuse holder. Cover any un-insulated portion of the fuse holder barrel and extend the wrap at least one (1) inch over the incoming conductor insulation.

H Direct Buried Lighting Cable formerly "Armored Underground Cable"

Specification 3815.2C1 is hereby deleted. Direct buried lighting cable shall be in accordance with the following:

1. Shall be listed as meeting the requirements of UL 44 and 1277.
2. Shall have four conductors # 4 AWG.
3. Conductors shall be Class C (19 strand) soft drawn, bare copper wires per ASTM B3 and ASTM B 8.
4. Shall be suitable for use in cable trays, aerial, or direct burial installations
5. Shall be rated for 600 Volts
6. Shall be heat resistant.
7. Shall be moisture resistant.
8. Shall be sunlight resistant.
9. Shall have insulation acceptable for use in wet or dry locations at 90°C.
10. Shall have insulated conductors with chemically cross-linked thermosetting polyethylene (XLPE) insulation.

11. Shall have individual conductors constructed with circuit identification in accordance with method 1 of ICEA S-73-532 (NEMA WC-57) Table E-1 (Black, White, Red and Green).
12. Shall have a copper tape shield wrapped around the binder tape and under the outer jacket The shield shall be a single thickness copper tape meeting ASTM B 152 with a minimum thickness of 254 µm (0.01 inch) and a spiral overlap of not less than 6.35 mm (0.25 inch).
13. Shall have a polyvinyl chloride (PVC) outer jacket.
14. The jacket shall have a minimum average thickness of 2.03 mm (80 mils) and a minimum thickness at any point of 1.62 mm (64 mils).
15. Shall be constructed using a tape binder
16. Shall have a rip cord between the copper tape shield and the outer jacket.
17. Shall have non-hygroscopic fillers used in the interstices of the cable where necessary to give the completed cable assembly a circular cross-section. Fillers made of Jute or Paper are not acceptable.
18. Shall have an outer cable jacket that has a substantially circular cross-section. The outer cable jacket shall not be convoluted and shall not have a ropy appearance.
19. Shall have the outer jacket surface ink printed with the following information:

    a. Manufacturer Name
    b. Year of Manufacture (Date Code)
    c. Type of Cable (i.e. TC SHIELDED, XHHW-2)
    d. Size and Number of Conductors (i.e. 4/C #4)
    e. Voltage rating
    f. Conductor Insulation Rating
    g. Labeled UL Listed
    h. Labeled as sunlight resistant (Sun Res) and direct burial (Dir Bur)
    i. Foot markers

Within 15 days after the Contract approval notice mailing date, the Contractor shall furnish evidence to the Engineer, in writing, that the orders have been placed for all cable required.

I BLANK

J Leveling Shims

The Contractor shall furnish and install leveling shims when installing aluminum light poles on light bases. The leveling shims shall meet the following requirements:

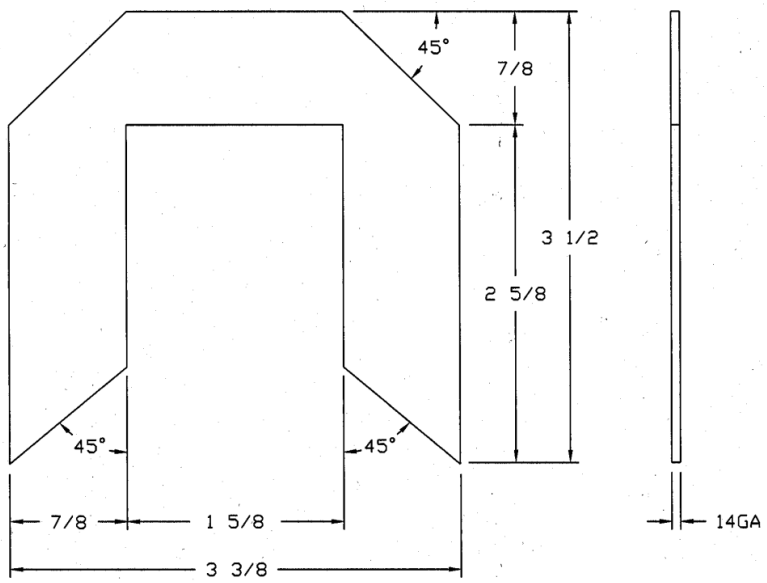

NOTE:

1. MATERIAL - GALVANIZED STEEL SHEET
   36,000 PSI MIN YIELD PER ASTM A924
2. FINISH - PREPLATED GALVANIZED MATERIAL

K Grounding Conductors

Bare #6 solid equipment grounding conductors shall be in compliance with Mn/DOT 3815.2B5 except the conductor shall be in compliance with ASTM B 3 soft or annealed copper.

L Light Base (foundation), Design E

The Contractor shall furnish and install a concrete Light Base (foundation), Design E in accordance with Mn/DOT 2545.3F and Mn/DOT Standard Plate 8127B, at the locations indicated in the Plan.

M Equipment Pad B

The Contractor shall furnish and install a complete concrete pad in accordance with MnDOT Standard Plate No. 8106, at the location indicated in the Plan. The equipment pad shall be constructed in accordance with MnDOT 2545.3F except the concrete shall be Mix No. 3A32.

The equipment pad mentioned will be used for mounting of a lighting service cabinet. The reinforcement bars for use in the foundation shall conform to the requirements of MnDOT 3301.

N Service Cabinet, Secondary Type L1 (240/480 VAC)

The Contractor shall furnish and install a Service Cabinet, Secondary Type L1 for supplying power to an electric lighting system, on an equipment pad concrete foundation at the location indicated in the Plans. MnDOT approved Service Cabinet's Secondary Type L1 are listed on the MnDOT Approved/Qualified Products Lists WEB site for Lighting:

http://www.dot.state.mn.us/products/index.html

O BLANK

P Lighting Unit, Type 9-40 (Breakaway)

The Contractor shall furnish and install Lighting Units Type 9-40.

Lighting Units Type 9- 40 consists of the following:

1. Meets the applicable provisions of MnDOT 2545.2R.
2. Breakaway light standard.
3. Fabricated from stainless steel or aluminum.
4. As detailed in the Plan.
5. Designed for one inch anchor bolts in a four bolt cluster as shown in MnDOT Standard Plate No. 8127.
6. A 40 foot nominal luminaire mounting height.
7. A nine (9) foot davit type mast arm.

Additional requirements for lighting units fabricated from aluminum:

1. 10 inch butt diameter.
2. An aluminum wall thickness of 0.188 inches.
3. Luminaire tenons of 2⅞ inches.
4. Factory installed vibration damper.

Provide a single mast arm unit base door at 180 degrees from the mast arm.

Provide MnDOT approved Cobra Head Luminaires as indicated on the Plan. MnDOT approved Cobra Head Luminaires are listed on the MnDOT Approved/Qualified Products Lists WEB site for Lighting:

http://www.dot.state.mn.us/products/index.html

All luminaires must have a date if installation (month and year) marked with a black oil based paint marker inside the luminaire housing. Lamps shall be as indicated herein (see **SL-2.2.D and SL-2.2.E**).

Q Lighting Unit, Type 9D-40 (Dual Davit Breakaway)

The Contractor shall furnish and install Lighting Units Type 9D-40.

Lighting Units Type 9D- 40 consists of the following:

1. Meet the applicable provisions of MnDOT 2545.2R.
2. Breakaway light standard.
3. Fabricated from stainless steel or aluminum.
4. Designed for one inch anchor bolts in a four bolt cluster as shown in MnDOT Standard Plate No. 8127.
5. As detailed in the Plan,
6. A 40 foot nominal luminaire mounting height,
7. A two nine (9) foot davit type mast arms with 2 3/8 inch tenons.

Additional requirements for lighting units fabricated from aluminum:

1. 10 inch butt diameter.
2. An aluminum wall thickness of 0.188 inches.
3. Luminaire tenons of 2⅞ inches.
4. Factory installed vibration damper.

Provide lighting unit bases with door at 90 degrees clockwise from mainline roadway davit with luminaire.

Provide MnDOT approved Cobra Head Luminaires as indicated on the Plan. MnDOT approved Cobra Head Luminaires are listed on the MnDOT Approved/Qualified Products Lists WEB site for Lighting:

http://www.dot.state.mn.us/products/index.html

All luminaires must have a date of installation (month and year) marked with a black oil based paint marker inside the luminaire housing. Lamps shall be as indicated herein (see **SL-2.2.D and SL-2.2.E**).

R Splice/Pull Vault

This work shall consist of furnishing and installing a Lighting Splice/Pull Vault, which shall be in accordance with the MnDOT Standard Specifications, the Detail in the Plan, and the following:

Shall be placed on a 300mm (12 inch) thick layer of coarse filter aggregate per MnDOT 3149.2H.

COVER

The following provisions shall apply to the Cover part of the Splice/Pull Vault:

Provide one ferrous device to lift the cover from the body of the Splice/Pull Vault for every three Splice/Pull Vaults. The ferrous device must be >28 inches in length.

The Splice/Pull Vault contains a MnDOT furnished locator ball installed by the Contractor. The Department will furnish the ball locators to the Contractor at the job site. Contact Metropolitan District Traffic Lighting Inspector listed elsewhere in these special provisions.

Clean Splice/Pull Vaults after installation. All areas shall be cleaned including the flange that the cover rests on and the bolt holes for the cover.

APL

MnDOT approved Pull/Splice Vault is listed on the following Website:

http://www.dot.state.mn.us/products/tms-its/FOMaterials.html

SL-2.3 CONSTRUCTION REQUIREMENTS

A Direct Buried Cable Installation

Plowing direct buried cable shall be done by means of a “vibratory plow with a "feed blade" that breaks the ground, places the cable to a predetermined depth, and closes the break in the ground. The vibratory plow must guide the cable into the bottom of the break, in such a manner, that little or no stress is placed on the cable during installation, ensuring no damage to the cable assembly.

The cable must be fed through the plow blade chute and NOT pulled by the plow blade. Installation of underground cable by means of a vibratory plow that “pulls” the cable in place, is not acceptable. The plowing method must be approved by the Engineer before installation of the cable.

B Labeling of Lighting Cable

The armored underground cables shall be installed in accordance with Mn/DOT 2545.3G2 and as follows:

All conductors in service cabinets and light pole bases shall be labeled **indicating the next termination point.** For example**, label cable(s):**

IN THE LIGHTING SERVICE CABINET, label would read:

TO POLE #1

IN POLE #1, labels would read:

TO LIGHTING SERVICE CABINET
TO POLE #2

Labels to identify cables shall consist of white vinyl adhesive tape wrapped around the cable. The labeling shall be hand written on the vinyl adhesive tape or produced with a label maker. If label marking is handwritten, the labeling shall be accomplished by utilizing a black permanent marker, in such a manner, that the markings are legible to the satisfaction of the Engineer. Labels produced with a label maker shall be suitable for use in wet locations, and this label must wrap around the cable one complete revolution with some overlap.

C Conduit Installation

Conduit shall be installed in accordance with Mn/DOT 2565.3D, except as follows:

Continuous Type HDPE Non-Metallic Conduit:

--- except for under existing pavements, underground Continuous Type HDPE Conduit shall be placed by trenching, stitching, plowing, or other method approved by the Engineer. Under existing pavements, Continuous Type HDPE Non-Metallic Conduit shall be placed as specified in 2565.3D2b.

Rigid Non-Metallic Conduit Joints:

--- the Contractor shall install appropriate sized long line couplings when installed under existing roadway surfaces

--- the applied PVC joint cement shall be allowed to set-up for six (6) hours before pulling the conduit through a directional bored channel.

D Light Standard Installation

The Contractor shall install light standards in accordance with Mn/DOT 2545.3H and as follows:

The Contractor shall use only shims for leveling when installing aluminum light standards on light standard bases.

The Contractor shall use only leveling nuts when installing stainless steel light standards on light standard bases.

Where leveling nuts are used, the leveling and top nuts shall both be securely tightened against the light standard base plate. Where shims are used the top nuts shall be securely tightened against the light standard base plate. The leveling nuts and top nuts shall be tightened as follows:

--- the threads of the nuts shall be lubricated with a brush on anti seize lubricant and then the nuts shall be torqued to minimum 125 ft-lbs. required for 1 inch diameter anchorages.

--- the threads of the nuts shall be lubricated with a brush on anti seize lubricant and then the nuts shall be torqued to minimum 240 ft-lbs. required for 1¼ inch diameter anchorages.

E Light Standard or Light Unit Numbering and Service Cabinet Numbering

The Contractor shall number the light standards or light units and service cabinet in accordance with Mn/DOT 2545.3P.

Light standards shall be numbered with the complete feed point numbers and letters placed above the pole number regardless if complete numbering is shown in the Plan.

Light Standard Numbering shall consist of the entire feed point designation with the pole number placed below.

The Contractor shall also verify that the light standards and/or light units to be installed are correctly numbered and if not the Contractor shall number the light standards and/or light units in accordance with Mn/DOT 2545.3P.

The outside of the lighting service cabinet shall be labeled in accordance with Mn/DOT 2545.3P and as follows:

In addition to the label on front door of the lighting service cabinet an additional label shall be placed on the side of the cabinet that faces traffic.

Mn/DOT approved Labels are listed on the Mn/DOT Approved/Qualified Products Lists WEB site for Lighting:

http://www.dot.state.mn.us/products/index.html

Letters and numbers shall have a minimum stroke width of 0.35 inches.

F Wiring in Light Standard Concrete Bases

The Contractor shall install conduits in light standard concrete foundations in accordance with the provisions of Mn/DOT 2545.3G. Approximately 2 feet of slack cable shall be left in each light standard base.

G Anti-Seize Lubricant

Threaded portions of all anchor rods above concrete foundations and steel bases shall be coated with a quality anti-seize lubricant before installation of lighting units, lighting service cabinets, or other type cabinets on anchor rods.

The Contractor shall also apply brush-on anti-seize lubricant to the access door nut and bolt of each lighting unit.

H Luminaires & Lamp Labeling

Luminaires and Lamps shall be marked according to 3810.2A. The term permanent marker shall be modified as follows "black oil based paint marker"

I BLANK

J Bonding and Grounding

All bonding and grounding shall be in accordance with the provisions of MnDOT 2545.3R and as follows:

1. All required ground rod electrodes shall be NRTL Listed.

2. The copper shield for each cable assembly in each pole base shall be drilled with a 5/16 drill and placed on the grounding stud provided in the pole base.

3. The Re-usable screw type active clamping ground lug with a tang shall be placed on top of the shielding.

4. Bonding of the #6 AWG solid bare grounding conductor to the pole base 5/16" grounding stud shall be accomplished by use of a UL listed Re-usable screw type active clamping ground lug with a tang that connects to the 5/16" pole base grounding stud.

5. The entire assembly (copper shield and the grounding lug) shall be tightened to from an electrically bonded and grounded connection.

6. Shall apply an oxide inhibiting agent to the connection after final connection and assembly.

K Oxide Inhibitor

The Contractor shall apply an oxide inhibiting agent to all No. 6 grounding connections after assembly and final connection.

L Electrical Service

The Contractor shall coordinate the installation of Electrical Service, provide power to the service cabinets, and verify the actual work to be done and all associated costs.

Proposed source of power addresses are identified in the Plan.

Fees for the "Application for Electrical Service" and payment to the Utility Company for providing the electrical service connections shall be the responsibility of the Contractor.

The Contractor shall secure approval from the Engineer for any changes to the Electrical Service as reflected in the Plan.

No measurement will be made of the various items that constitute Electrical Service, however all such work will be construed to be included as part of the project (t**he electrical service costs will not be paid for as part of the pay item)**. The Contractor shall provide the Engineer a copy of the invoice from the power company. Payment will be made for the invoice cost paid to the power company plus 10%. The payment shall be compensation in full for all costs incidental thereto, including, but not limited to providing power to service cabinets, power company fees, Power Utility Company Coordination, notifying MnDOT of ownership details, and all materials and labor necessary to construct the Electrical Service.

M Electric Service Information Form

The contractor shall fill out the electric service information form (found elsewhere in these Special Provisions) for lighting systems.

The Contractor shall provide, to the Engineer prior to final acceptance of the project, five (5) copies of the electric service information form for lighting systems and the copies shall be distributed, by the Engineer, as follows:

1. MnDOT Metro Electrical Services Unit.
2. MnDOT Traffic Electrical Systems Engineer.
3. MnDOT District Traffic Lighting Design Engineer.
4. City of Burnsville.
5. County of Dakota.

The Contractor furnished "electrical service information form for lighting systems" shall be considered incidental work.

N Final Inspection

The contractor shall contact the Metro Traffic Lighting Inspector when the lighting system is ready for final inspection. As-built plan sheets, either redlined or corrected sheets will be required including any changes to the Plan and should be given to the Metro Traffic Lighting Inspector prior to final inspection approval.

Metropolitan District Traffic Lighting Inspector:

Eric Klute
Minnesota Department of Transportation
Metropolitan Division
Traffic Engineering Section
1500 West County Road B-2
Roseville, MN 55113
651-775-8697

The Contractor shall correct deficiencies in the lighting system before the Final Acceptance of the project.

The contract warranty period for the lighting system will commence on the date that Mn/DOT's Representative signed the completed lighting inspection punch list.

SL-2.4 MEASUREMENT AND PAYMENT

Furnishing labor, equipment, and materials for construction of a fully operating electric roadway lighting system at the location in the Plan, as specified herein, will be measured as an integral unit complete in place and operating and will be paid for under Item No. 2545.501 (ELECTRIC LIGHT SYSTEM) at the Contract price per LUMP SUM, which price shall be compensation in full for all costs incidental thereto.

Electric Service Information Form For Lighting Systems

Project Number: Contractor:

Date:

System	MN/DOT Feed Point Number	Meter Address	Electric Utility Transformer Size In KVA	Length of conductors in feet from transformer connection to meter socket connection.		
				L1 =	L2 =	Neutral =
				L1 =	L2 =	Neutral =
				L1 =	L2 =	Neutral =
				L1 =	L2 =	Neutral =
				L1 =	L2 =	Neutral =
				L1 =	L2 =	Neutral =
				L1 =	L2 =	Neutral =
				L1 =	L2 =	Neutral =

INDEX TO DIVISION SS

SECTION NO.		ITEM	PAGE NO.
SS-1	(1802)	Qualification of Workers	1-SS
SS-2	(2104)	Haul Salvaged Material	2-SS
SS-3	(2565)	Traffic Control Signals	2-SS
SS-4	(2565)	Emergency Vehicle Pre-emption Systems	34-SS
SS-5	(2565)	Traffic Control Interconnection	37-SS
SS-6	(2565)	Revise Signal System	58-SS

I hereby certify that the Special Provisions for signal construction (Sections SS-1, SS-2, SS-3, SS-4, SS-5, and SS-6) contained in this proposal were prepared by me or under my direct supervision and that I am a duly licensed Professional Engineer under the laws of the State of Minnesota.

Michael Gerbensky, P.E.

Lic. No. 19863 Date 6-12-2012

DIVISION SS
TABLE OF CONTENTS

SS-1 QUALIFICATIONS OF WORKERS 1-SS

SS-2 HAUL SALVAGED MATERIAL 2-SS

SS-2.1 GENERAL 2-SS

SS-2.2 MEASUREMENT AND PAYMENT 2-SS

SS-3 TRAFFIC CONTROL SIGNALS 2-SS

SS-3.1 GENERAL 3-SS

SS-3.2 MATERIALS 5-SS

Conduit 5-SS
Handholes 6-SS
Mast Arms, Pole Standards and Luminaire Davits 6-SS
Mast Arm Pole Standards and Luminaires 7-SS
Traffic Signal Pedestals 8-SS
Straight and Angle Mount Plumbizers 11-SS
Angle and Straight Mount Caps 12-SS
Threaded and Flange Pole Adaptor 12-SS
Cluster Head Adaptor 12-SS
Pole Base Connectors 13-SS
Electrical Cables and Conductors for Traffic Signal Systems 13-SS
Vehicle Signal Faces (Poly-Carbonate) 17-SS
Pedestrian Signal Faces with Countdown Timers 18-SS
Accessible Pedestrian Signal Systems 19-SS
Pedestrian Push Button Stations 19-SS
Equipment Pads 20-SS
Signal Service Cabinets (with Battery Back-up Equipment) 20-SS
Loop Detector Splices 20-SS

SS-3.3 CONSTRUCTION REQUIREMENTS 21-SS

Conduit Installation 21-SS
Handhole Installation 21-SS
Anti-Seize Lubricant 21-SS

Equipment Pad Concrete Foundation 22-SS
Signal Service Cabinets 22-SS
Preformed Rigid PVC Conduit Loop Detector Installation..... 23-SS
Pedestal Reinforcing Collar (Wind Collar) Installation..... 23-SS
Pedestrian Push Button Stations 24-SS
"As Built Plan"..... 24-SS
Wiring 25-SS
Bonding and Grounding..... 27-SS
Oxide Inhibitor..... 28-SS
Accessible Pedestrian Push Button Units 28-SS
Pole Sealant..... 29-SS
Luminaires and Lamp Labeling..... 29-SS
Signal Pole Installation to Concrete Foundations Anchor Rods 29-SS
Pole Base Connector Crimping Tool..... 30-SS
Salvage Video Camera and Luminaire Extension 30-SS
Sign Panel Warning Stickers 30-SS
Activating Signals 31-SS
Removals..... 31-SS
Galvanized Pole or Mast Arm Finish Repair 33-SS

SS-3.4 MEASUREMENTS AND PAYMENTS 34-SS

SS-4 EMERGENCY VEHICLE PRE-EMPTION SYSTEMS (EVP) 34-SS

SS-4.1 GENERAL 35-SS

SS-4.2 MATERIALS 35-SS

EVP Mounting Equipment..... 35-SS
EVP Detector Cable..... 36-SS
Emitter Activated Emergency Vehicle Pre-emption(EVP) Systems 36-SS

SS-4.3 CONSTRUCTION REQUIREMENTS 36-SS

Emergency Vehicle Pre-emption(EVP) Installation 36-SS

SS-4.4 MEASUREMENTS AND PAYMENTS 37-SS

SS-5 TRAFFIC CONTROL INTERCONNECTION..... 37-SS

State Furnished Materials..... 38-SS
Abbreviations 38-SS

Definitions 39-SS
County Fiber Construction Contact 40-SS
Fiber-Optic Connections 40-SS
Materials 41-SS
Interconnect Project Submittal and FO Test Documentation 41-SS
Grounding 41-SS
Labeling 42-SS
Fiber Distribution Components 43-SS
Project Testing and Documentation Submittals 44-SS
Industry Accepted Lubricants for All Cables 46-SS
Buried Cable Signs 47-SS
Non-Metallic Conduit 48-SS
Fiber-Optic Cable Testing 49-SS
Fiber-Optic Pigtail Termination 53-SS
Bored Conduit 54-SS
Fiber Vaults 55-SS
Armored Fiber-Optic Pigtail 55-SS

SS-5.1 MEASUREMENT AND PAYMENT 58-SS

SS-6 REVISE SIGNAL SYSTEM 58-SS

SS-6.1 GENERAL 58-SS

SS-6.2 MATERIALS 59-SS

Electrical Cables and Conductors for Traffic Signal Systems 59-SS
Loop Detector Splices 60-SS

SS-6.3 CONSTRUCTION REQUIREMENTS 60-SS

Preformed Rigid PVC Conduit Loop Detector Installation 60-SS
Adjust Handholes 60-SS
As Built Plan 61-SS
Activating Signals 62-SS
Removals 62-SS

SS-6.4 MEASUREMENT AND PAYMENT 63-SS

DIVISION SS

SS-1 (1802) QUALIFICATION OF WORKERS

The provisions of MnDOT Specification 1802 are hereby supplemented with the following:

Signal and Lighting Certification will be required for all Contractors, Supervisors or Foremen involved in the field installation of the Traffic Signal and/or Lighting portion of this Project. Signal and Lighting Certification, Level II, is available through the MnDOT Office of Traffic, Safety, and Technology (OTST). Questions regarding certification or past certification may be directed to the MnDOT Office of Traffic, Safety, and Technology (OTST) at Telephone No. (651) 234-7055.

Certified Contractor personnel shall be on the Project work site at all times to perform or directly supervise the installation, revision or repair of a Traffic Signal System or a Lighting System.

SS-2 (2104) HAUL SALVAGED MATERIAL

SS-2.1 GENERAL

This work shall consist of loading and hauling materials designated for salvage in accordance with the provisions of MnDOT 2104 and the following:

Salvaged materials shall be disassembled as directed by the Engineer and shall be delivered to the Department at the Electrical Services Section (ESS), 6000 Minnehaha Avenue, St. Paul, MN, 55111. The Contractor shall notify Mr. Mike Schroeder (651-366-5719) of MnDOT Electrical Services Section at least three (3) normal working days in advance of the time the Contractor intends to deliver the salvaged materials. **THE ENGINEER SHALL BE NOTIFIED IN ADVANCE OF NOTIFICATION TO MR. SCHROEDER**.

Any damage to the salvaged materials resulting from the hauling operation shall be repaired and replaced at the Contractor's expense.

The Contractor shall obtain a salvaged material receipt from the MnDOT Central Electrical Inventory Center indicating that MnDOT has received the salvaged material. <u>The Contractor shall give the project Engineer a copy of this receipt for the permanent project records</u>.

SS-2.2 MEASURMENT AND PAYMENT

All hauling of salvaged materials to the Department at the location specified herein shall be paid for under Item No. 2104.601 (HAUL SALVAGED MATERIAL) at the contract LUMP SUM price which shall be payment in full for all costs relative to hauling the materials to, and depositing the materials, at the location specified herein.

SS-3 (2565) TRAFFIC CONTROL SIGNALS

This work shall consist of removing, salvaging, reinstalling, and disposing of items of one (1) existing traffic control signal system, furnishing and installing materials and electrical/electronic equipment; and installing Department furnished materials as specified herein, all to provide three (3) new complete operating full-traffic-actuated fiber-optic cable interconnected traffic control signal systems---

1. **SYSTEM "A"** - at the intersection of County State Aid Highway No. 5 (Kenwood Trail) and Williams Drive/Greenwood Drive, Burnsville, Dakota County, and

2. **SYSTEM "B"** - at the intersection of Trunk Highway 13, South Ramp and County State Aid Highway No. 5 (Kenwood Trail), Burnsville, Dakota County, and

3. **SYSTEM "C"** - at the intersection of Trunk Highway 13, North Ramp and County State Aid Highway No. 5 (Kenwood Trail), Burnsville, Dakota County,

in accordance with the applicable provisions of MnDOT 2565; with the current edition of the National Electrical Code; with the Plan; and as follows:

SS-3.1 GENERAL

A. The Department will furnish to the Contractor (at no expense to the Contractor) the following materials and electrical equipment for the Contractor to install:

1. Three (3) traffic signal cabinets each complete with actuated controller unit and all required signal control equipment.

2. Twelve (12) sets of anchor rods, nuts, and washers to mount the Department furnished traffic signal cabinets (one set = 1 anchor rod, nut, and washer).

3. Three (3)) 4-section rubber gaskets to be installed by the Contractor between the bottom of the traffic signal cabinets and the concrete foundation.

4. Warning stickers on new sign panels. Quantity to be coordinated with the Engineer.

B. The Contractor shall install the Department furnished traffic signal cabinets complete with actuated controller unit and all required signal control equipment described in (A) above; shall furnish and install all additional materials and electrical/electronic equipment to provide a complete operating traffic signal cabinet installation (which includes, but is not limited to: a cabinet concrete foundation as part of the equipment pad concrete foundation using Department furnished anchor rods, nuts, and washers; bonding and grounding materials and connections; etc.); and shall make all field lead connections in the traffic signal cabinets as directed by the Engineer to make each traffic control signal system operational.

THE CONTRACTOR SHALL PROTECT THE DEPARTMENT FURNISHED CABINET **PALLETS** FROM DAMAGE AND **RETURN** THE PALLETS TO MnDOT CENTRAL ELECTRICAL INVENTORY CENTER AT THE ADDRESS SPECIFIED HEREIN.

C. The materials and electrical equipment described in (A) above will be furnished to the Contractor at the MnDOT Central Electrical Services Unit, 6000 Minnehaha Avenue, St. Paul, MN, 55111. The Contractor shall request from the Central Electrical Services Unit the materials and electrical equipment listed in (A) above. The Contractor shall direct the Central Electrical Services Unit to refer to **T.E. Request No.'s 5607, 5608, and 5609**. The Contractor shall request these Department furnished materials at least thirty (30) normal working days in advance of the time the Contractor needs them on the project. The Contractor shall further notify Mr. Mike Schroeder (651-366-5719) or Mr. Mark Harrington (651-366-5720) of the MnDOT Central Electrical Inventory Center at least three (3) normal working days in advance of each time the Contractor intends to pick up materials and electrical equipment. The Contractor shall pick up the Department furnished materials and electrical equipment at the above specified location and haul them to the job site. **THE ENGINEER SHALL BE NOTIFIED IN ADVANCE OF NOTIFICATION TO MR. SCHROEDER OR MR. HARRINGTON.**

The cabinets shall be secured in an **upright position when transporting** to the job site to ensure that the cabinets will not tip and be damaged.

D. **THE CONTRACTOR SHALL PROVIDE SHOP DETAIL DRAWINGS FOR MATERIALS AND ELECTRICAL EQUIPMENT AS SPECIFIED IN THE CONTRACT DOCUMENTS.**

E. All Materials, work methods, and equipment shall comply with the standards of the National Electrical Manufacturers Association, Electronic Industries Association, Underwriters Laboratory, Inc., National Electrical Code; Telecommunications Industries Association, local codes and ordinances, the requirements of the Contract, these Special Provisions, and the Plan.

F. **Signal Agreements**

A Minnesota Transportation Department Traffic Control Signal Agreement will be executed for the work under this Contract. MnDOT approval of any and all changes, supplements to the Contract, and/or change orders to this Contract which will affect cost participation in the signal construction shall be contingent upon the execution of appropriate procedures necessary to satisfy the terms and conditions of said agreement.

G. **Placed Orders For Materials**

WITHIN 15 DAYS AFTER THE CONTRACT APPROVAL NOTICE MAILING DATE, THE CONTRACTOR SHALL FURNISH EVIDENCE TO THE ENGINEER, IN WRITING, THAT ORDERS HAVE BEEN PLACED FOR ALL SIGNAL SYSTEM COMPONENTS REQUIRED ON THE PROJECT.

H. **Gopher State One Call**

The Contractor must adhere to all requirements of Gopher State One Call including the following:

The Contractor is responsible for marking the proposed excavation area by utilizing white markings. The white markings must delineate the **actual excavation area** where the locating of underground facilities is required.

I. BLANK

J. The County has assigned a contact (County Contact) for this project involving loop placement and installation at System "A". Ken Raway is the contact from Dakota County Traffic Operations. He can be reached at: Office-952.891.7929 or Cell-651.755.3116. E-mail: Ken.Raway@co.dakota.mn.us.

K. The MnDOT Contact for the loop placement and installation at Systems "B" and "C" is Mike Dittel, MnDOT Metro Traffic Operations. He can be reached at 1500 West County Road B2, Roseville, Minnesota. Phone: 651-775-9493. E-mail: michael.dittel@state.mn.us.

SS-3.2 MATERIALS

A. Conduit

The Contractor shall furnish and install either rigid steel conduit (R.S.C.), non-metallic rigid conduit (PVC), or Continuous Length Conduit (HDPE) at the locations indicated in the Plan. The size of the conduit shall be as indicated in the Plan. All conduit shall be in accordance with the following:

1. Rigid Steel Conduit:

   Shall be in accordance with MnDOT 3801.

2. Rigid Non-Metallic Conduit (PVC) and Continuous Length Conduit (HDPE):

   Shall be in accordance with MnDOT 3803, except as follows:

   a. Shall be NRTL listed as being compliant with UL 651B.

   b. All references to ASTM F 2160 shall be deleted.

   c. Shall be Schedule 80 conduit and fittings for all installations.

d. Conduit fittings shall be appropriate for use with HDPE continuous length conduit.

e. Shall be capable of being installed by stitching, plowing, trenching, or directional boring methods.

f. Shall be either "GREY" or “RED” in color.

g. Shall be marked on the outside of conduit indicating the following:

i. Manufacturer’s name
ii. Size of conduit
iii. Type of conduit (HDPE, etc.)
iv. NRTL Certification Mark
v. Any other markings required by the N.E.C.

h. Before the cables and conductors are installed, non-metallic conduit bell ends (**appropriately sized for the HDPE type conduit**) shall be installed to prevent damage to the cables and conductors.

i. All conduit from concrete foundations to the nearest handhole shall be either rigid steel conduit (R.S.C.) or rigid non-metallic conduit (PVC**). HDPE continuous length conduit is not allowed for use between concrete foundations and the nearest handhole.**

B. Handholes

New handholes shall be MnDOT approved handholes listed on the Office of Traffic, Safety, and Operations (OTSO) WEB site under the Approved/Qualified Products List for Traffic Signals.

http://www.dot.state.mn.us/trafficeng/designtools/index.html

C. Mast Arm’s, Pole Standards and Luminaire Davits (Steel Requirements)

1. All steel used in construction of mast arm pole standards, mast arm extensions and luminaire davits shall be in accordance with the provisions of MnDOT 3310, and as follows:
   a. The plate steel used shall be ASTM A709 Gr. 50 (A572 Gr. 50)
   b. The sheet steel used shall be ASTM A1011 Gr. 50
   c. The structural coil used shall be ASTM A1018 Gr. 50

2. All steel used on mast arm pole standards, mast arms, luminaire davits and handhole covers shall be galvanized in accordance with the provisions of MnDOT 3394.

D. Mast Arm Pole Standards and Luminaires

All mast arm pole standards and luminaires shall be in accordance with the provisions of MnDOT 3831, except as follows:

1. Seal Mast Arm Standard Handhole Covers

The Contractor shall seal all 76 mm x 127 mm (3 inch by 5 inch) vertical pole shaft and mast arm handholes with a clear 100% silicone sealant to ensure a moisture free seal between the access cover and the access opening.

2 Luminaire Wiring

The 14-3 Signal control cable shall be run as one continuous piece from the signal service cabinets to the Luminaire. This cable shall not be spliced in the pole base.

The Contractor shall furnish and install a wire holder that supports the luminaire cable/conductors within the end of the luminaire slipfitter near the connection point of the luminaire. The MnDOT approved wire holders are listed on the Office of Traffic, Safety, and Operations (OTSO) WEB site under the Approved/Qualified Products List for Traffic Signals.

http://www.dot.state.mn.us/trafficeng/designtools/index.html

3. Luminaires

All luminaires shall be cobrahead, 250 watt, High Pressure Sodium (HPS) (without photocell receptacle) for 120 Volt. MnDOT approved luminaires are listed on the Office of Traffic, Safety, and Operations (OTSO) WEB site under the Approved/Qualified Products List for Roadway Lighting.

http://www.dot.state.mn.us/trafficeng/designtools/index.html

4. Stainless Steel Woven Wire Cloth

The Contractor shall furnish and install a **stainless steel** woven wire cloth around the opening at the bottom of the transformer base to the satisfaction of the Engineer.

The woven wire cloth shall have a mesh of 5 x 5 per inch, a wire diameter of .041 inch, an opening width of .159 inch, with an open area of 63.2%. The stainless steel woven cloth shall be inserted and wound around the transformer base opening (see pictures elsewhere in these Special Provisions) to prevent rodent entry.

The woven cloth top edge shall be cut even and smooth and secured flush with self tapping screws to the upper edge of the transformer base opening. The woven cloth shall be connected at the overlap with either a small stainless steel or brass bolt and nut assembly. The Contractor shall ensure that the woven wire cloth bottom edge is smooth, flush with the transformer base concrete foundation, ends shall overlap at least two (2) inches, and secured, in a manner, that does not allow movement.

The entire woven mesh assembly shall be grounded in accordance with the National Electrical Code (NEC) requirements.

E. Traffic Signal Pedestals

The Contractor shall furnish and install traffic signal pedestal shafts and pedestal bases at the locations indicated in the Plan. Each traffic signal pedestal shaft and pedestal base shall be in accordance with the applicable provisions of MnDOT Standard Plate No. 8122, MnDOT 3832, and as follows:

1. Pedestal Base:

   Shall meet or exceed current American Association of State Highway and Transportation Officials (AASHTO) breakaway requirements. Test reports from a Federal Highway Administration (FHWA) approved independent laboratory shall be provided certifying that the pedestal base has been tested and meets all requirements. A statement of certification from the FHWA stating such tests have been accepted and approved shall be supplied by the manufacturer.

2. Anchor Rods:

Anchor rods, nuts, and washers shall conform to the requirements of MnDOT Standard Plate No. 8112 and shall be galvanized full length in accordance with the provisions of MnDOT 3392.

3. Pedestal Washers:

Each pedestal washer shall be in accordance with MnDOT Standard Plate No. 8112.

4. Pedestal Shims

Use "U" shaped galvanized steel pedestal shims to plumb traffic signal pedestals. The pedestal shims are as follows:

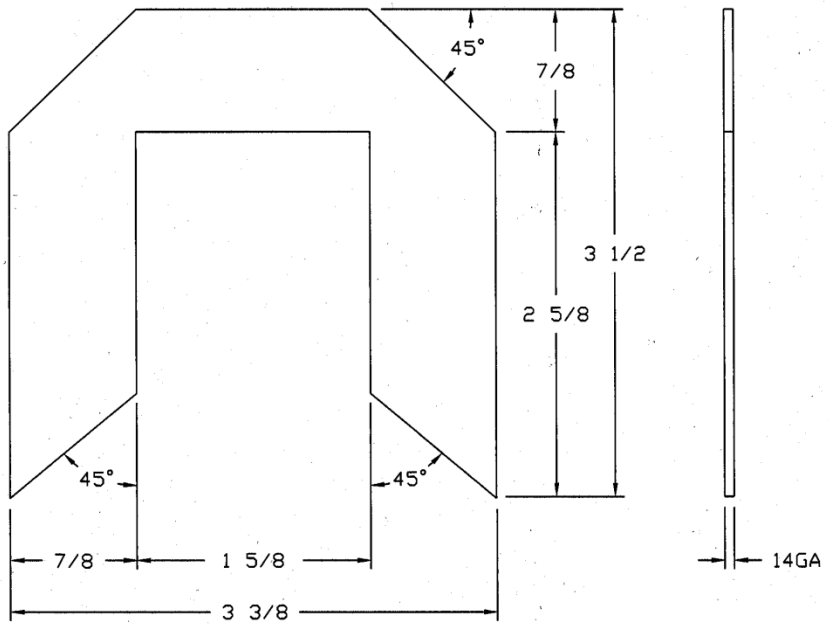

NOTE:

1. MATERIAL - GALVANIZED STEEL SHEET 36,000 PSI MIN YIELD PER ASTM A924
2. FINISH - PREPLATED GALVANIZED MATERIAL

5. Pedestal Bases with Extended Collar and Pedestal Reinforcing Collars (Wind Collars)

   The Contractor shall furnish and install either a pedestal base with an extended collar or a pedestal reinforcing collar on each pedestal shaft.

a. Pedestal base with Extended Collar:

The pedestal base with extended collar shall utilize stainless steel set screws for securing the pedestal shaft after installation into the pedestal base (**Reinforcing collar not used for this type of pedestal base**). The pedestal base with extended collar shall be in accordance with the applicable provisions of MnDOT Standard Plate No. 8122, MnDOT 3832, as specified herein, and as follows:

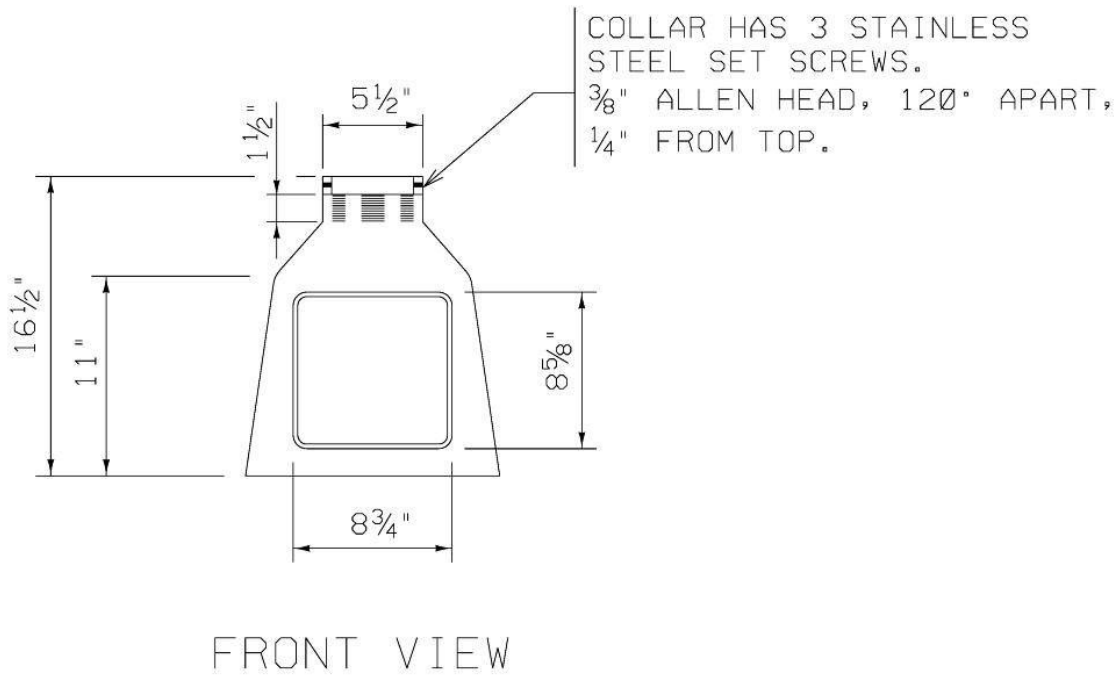

b. Pedestal Reinforcing Collar:

Where pedestal bases, without the extended collar are used, the Contractor shall furnish and install a pedestal reinforcing collar on each pedestal shaft installation.
The pedestal reinforcing collars shall be MnDOT approved Pedestal Reinforcing Collars as listed on the MnDOT Approved/Qualified Products List WEB site for Signals:

http://www.dot.state.mn.us/products/index.html

The installation of the pedestal reinforcing collar is specified elsewhere in these Special Provisions.

6. Pedestal Cap:

   A pedestal cap shall be furnished and installed atop each pedestal shaft when straight mount plumbizers are used for signal and pedestrian head mounting. The caps shall be fabricated from aluminum.
   The Pedestal Caps shall have an anodic coating as per MIL-A-8625C for Type II, Class I Coating.

   The pedestal caps shall be MnDOT approved pedestal caps as listed on the MnDOT Approved/Qualified Products List WEB site for Signals:

   http://www.dot.state.mn.us/products/index.html

7. Pedestal Slipfitter Collars:

   A pedestal slipfitter collar as detailed in MnDOT Standard Plate No. 8111 shall be furnished and installed atop each pedestal shaft when a pedestrian signal indication is installed on the top of the pedestal shaft or when signal head bracketing is used-- - the Contractor shall check with the Engineer before procurement for the number of 1½ inch inside threaded hubs (side openings) in the pedestal slipfitter collar to be ordered from the signal supplier. The ornamental caps shall be fabricated from aluminum.

   The Pedestal Slipfitter Collars shall have an anodic coating as per MIL-A-8625C for Type II, Class I Coating.

F. Straight and Angle Mount Plumbizers

The Contractor shall furnish and install straight or angle mount plumbizers at locations as indicated in the plan.
The straight and angle mount plumbizers shall be MnDOT approved straight or angle mount plumbizers as listed on the MnDOT Approved/Qualified Products List WEB site for Signals:

http://www.dot.state.mn.us/products/index.html

G. Angle and Straight Mount Caps

The Contractor shall furnish and install angle and straight mount caps at locations as indicated in the plan.
The angle and straight mount caps shall be MnDOT approved angle and straight mount caps as listed on the MnDOT Approved/Qualified Products List WEB site for Signals:

http://www.dot.state.mn.us/products/index.html

H. Threaded Hub and Flange Pole Adaptor

The Contractor shall furnish and install threaded hub and flange pole adaptors at locations as indicated in the plan.

The threaded hub and flange pole adaptors shall be MnDOT approved threaded hub and flange pole adaptors as listed on the MnDOT Approved/Qualified Products List WEB site for Signals:

http://www.dot.state.mn.us/products/index.html

I. BLANK

J. Cluster Head Adaptor

Provide Cluster head adaptors at locations as indicated in the plan.

Use MnDOT approved cluster head adaptors listed on the MnDOT Approved/Qualified Products List WEB site under Signals:

http://www.dot.state.mn.us/products/index.html

L. Pole Base Connectors

14 AWG pole base connectors shall be installed in each pole base for terminating signal conductors to vehicle signal indications, pedestrian signal indications, and EVP confirmatory lights. **Pole base connectors shall be installed in accordance with the detail in the Plan.**

MnDOT approved pole base connectors, pins, sockets, and hand crimp tool are listed on the Office of Traffic, Safety, and Operations (OTSO) WEB site under the Approved/Qualified Products List for Traffic Signals:

http://www.dot.state.mn.us/trafficeng/designtools/index.html

M. Electrical Cables and Conductors for Traffic Signal Systems

All electrical cables and conductors for traffic signal systems shall be in accordance with the applicable provisions of MnDOT 3815, and as specified herein.

1. Cable Markings:

   All electrical cables, except Loop Detector Lead-in Cable - IMSA 50-2 and the 3/C #20 Emergency Vehicle Preemption (EVP) Detector Cable used in signal system construction shall have the jacket surface ink printed with the following information:

   A. Manufacturer Name
   B. Year of Manufacture (Date Code)
   C. Type of Wire or Cable (i.e. TC, XHHW-2, THWN)
   D. Size and Number of Conductors
   E. Voltage Rating
   F. Conductor Insulation Rating
   G. Nationally Recognized Testing Laboratory (NRTL) Certification Mark indicating the cable is listed. [i.e. UL, ITSNA (ETL), CSA]
   H. Labeled as sunlight resistant (Sun Res), direct burial (Dir Bur), Oil Resistant (Oil Res 1)

   Signal Control Cable shall have additional markings as follows.

   a. Traffic Signal Cable
   b. Foot Markers

Loop Detector Lead-in Cable - IMSA 50-2 shall meet the marking requirements set forth in the International Municipal Signal Association (IMSA) specification.

Emergency Vehicle Preemption (EVP) Detector Cable (3C # 20) shall be surface marked in accordance with the National Electrical Code (NEC) and shall have additional markings as follows:

a. Labeled as sunlight resistant, direct burial
b. Year of Manufacture (Date Code)
c. Conductor Insulation Rating
d. Foot Markers

All cable markings shall be repeated at intervals not exceeding 24 inches on the jacket surface.

2. Signal Control Cable:

a. All signal control cable shall be listed by a National Recognized Testing Laboratory (NRTL) as defined by the U.S. Department of Labor. The testing laboratory must be listed by OSHA in its scope of recognition for the applicable tests being conducted as required by this specification. A list of recognized testing labs for products sold in the United States may be found on the U.S. Department of Labor's web site:

http://www.osha.gov/

b. The cables shall be tested by an NRTL and shall meet all of the following listed specifications and general requirements:
UL 44
UL 1277
UL 1685

c. All signal control cable shall conform to the following :
ICEA T-29-520
ICEA T-30-520
ICEA S-73-532 (NEMA WC 57)

d. Shall be suitable for use at 90°C in wet or dry locations
Note: This cable will be submersed in water for long periods of time
e. Shall be suitable for direct burial
f. Shall be sunlight resistant

g. Shall be rated for 600 Volts
h. Shall be rated as a Tray Cable
i. Shall have a cable designation of XHHW-2
j. Shall be #14 AWG
k. Each conductor shall be a Class B (7 strand) soft drawn, bare or tinned copper per ASTM B3, ASTM B8 and ASTM B33
l. Shall be constructed with circuit identification in accordance with method 1 of ICEA S-73-532 (NEMA WC-57) Table E-1 except as modified below.

3 Conductor:

1. Black
2. White
3. Green

4 Conductor:

1. Black
2. White
3. Red
4. Black/Red stripe

6 Conductor:

1. Black
2. White
3. Red
4. Black/Red stripe
5. Orange
6. Blue

12 Conductor:

1. Black
2. White
3. Red
4. Black/Red stripe
5. Orange
6. Blue

7. White/Black Stripe
8. Red/Black Stripe
9. White/Red Stripe
10. Orange/Black Stripe
11. Blue/Black Stripe
12. Black/White Stripe

m. Shall have a minimum average insulation thickness of 30 mils
n. Shall be constructed using a tape binder
o. Shall have a cable jacket that has a substantially circular cross-section. The outer cable jacket shall not be convoluted and shall not have a ropy appearance.
p. Shall have non-hygroscopic fillers used in the interstices of the cables where necessary to give the completed cable assembly a circular cross-section.
q. Fillers made of Jute or Paper are not acceptable.
r. Shall have a rip cord between the outer jacket and the tape binder
s. Bare copper or tinned wires are acceptable
t. Outer jacket of the 4 conductor cable shall have **maximum** diameter of 0.450 inches.
u. Outer jacket of the 6 conductor cable shall have **maximum** diameter of 0.530 inches.
v. Shall carry an oil resistance level 1
w. Shall meet a -35° C (-31° F) cold bend test
x. For cables employing a PVC jacket a low migration grade of PVC is required
y. The cable jacket shall pass the 7 day (168 hr) oven age test @ 121° C (249.8° F) per UL 1581
z. This cable carries multiple ratings. Where the requirements of different ratings are in conflict the more stringent specification shall be the parameter the cable is required to meet.
aa. The manufacturer shall provide to Minnesota Department of Transportation (MnDOT) the test qualification report from the NRTL stating that the submitted cable meets all the requirements of this specification.
bb. Once a cable has been accepted by MNDOT as meeting the requirements of this specification no substitution of materials will be allowed unless the manufacturer has received written permission from MnDOT allowing the substitution.

All field wiring terminations shall be as indicated on the field wiring diagram included in the Plan set.

3. The following cable is not required to be listed by a Nationally Recognized Testing Laboratory (NRTL):

   2/c #14 (Loop Detector Lead-in Cable)
   3/C #20 (EVP cable)

4. Loop Detector Lead In Cable

   Shall be in accordance with 3815.2C4(b)

N. Vehicle Signal Faces (Poly-Carbonate)

All new vehicle signal faces shall be in accordance with the applicable provisions of MnDOT 3834, except as follows:

All vehicle signal faces, visors, and background shields shall be fabricated with ultraviolet and heat stabilized black poly-carbonate materials, conforming to I.T.E. requirements.

MnDOT approved Poly-Carbonate Signal Heads are listed on the MnDOT Approved/Qualified Products Lists WEB site for Signals:

http://www.dot.state.mn.us/products/index.html

The Contractor shall furnish and install a metal support plate (supplied by the signal head Manufacturer) on the inside of the signal indication at the attachment point of the straight or angle mount plumbizer (one plate each for inside the upper and lower signal housing at the attachment point).

Vehicle signal faces shall utilize either straight or angled mounts. The mounts shall be in accordance with these special provisions and as detailed in the Plan.

The Contractor shall furnish and install signal head mounting spacers when mounting a four or five section signal face. See attached diagram located elsewhere in these Special Provisions.

MnDOT approved mounting spacers are listed on the MnDOT Approved/Qualified Products Lists WEB site for Signals:

http://www.dot.state.mn.us/products/index.html

The Contractor shall also furnish and install the required through-bolts for connecting the individual sections. See attached diagram located elsewhere in these Special Provisions.

In all cases, two sections of the vehicle signal head shall be mounted below the straight or angled mount with the remaining sections mounted above the straight or angled mount. The indications above or below the straight or angled mount shall be fastened together by means of a non-corrosive 3-bolt mounting assembly. The 3-bolt mounting assembly shall utilize locknuts to prevent the assembly from loosening.

The installation of the vehicle signal faces shall be to the satisfaction of the Engineer.
All "Red", "Yellow", and "Green" signal indications shall utilize light-emitting diode (LED) units. MnDOT approved LED Signal Indications are listed on the MnDOT Approved/Qualified Products Lists WEB site for Signals:

http://www.dot.state.mn.us/products/index.html

For each LED signal indication, the Contractor shall submit to the Engineer, for approval, five (5) copies of all warranty information indicating the required 5-year warranty period **(from date of installation)**, product invoice, and documentation indicating name of manufacturer, model number, and serial number . The five (5) copies shall be distributed by the Engineer as follows:

1. MnDOT Metro Electrical Services Unit.
2. MnDOT Traffic Electrical Systems Engineer.
3. MnDOT District Traffic Signal Operations Engineer.
4. County of Dakota.
5. City of Burnsville

The Contractor shall, to the satisfaction of the Engineer, affix to the back of each "LED" signal indication a permanent label, or permanently marked (utilizing a "oil based paint marker") with the actual date of installation. The oil based paint marker shall be a contrasting color to ensure that the date can be easily read.

O. BLANK

P. Pedestrian Signal Faces with Countdown Timers

The Contractor shall furnish and install poly-carbonate pedestrian signal faces with countdown timers. MnDOT approved Pedestrian Signal Faces with countdown timers are listed on the MnDOT Approved Products List for Signals:

http://www.dot.state.mn.us/products/index.html

The pedestrian indications with countdown timer shall utilize Light-emitting Diode (LED) Units listed on the MnDOT Approved/Qualified Products List for Signals:

http://www.dot.state.mn.us/products/index.html

The Contractor shall provide, to the Engineer, five (5) copies of product documentation as required by MnDOT 3835 and the copies shall be distributed, by the Engineer, as follows:

1. MnDOT Metro Electrical Services Unit.
2. MnDOT Traffic Electrical Systems Engineer.
3. MnDOT District Traffic Signal Operations Engineer.
4. County of Dakota.
5. City of Burnsville.

Q. Accessible Pedestrian Signal Systems (APS) – (Audible Pedestrian Push Button Units and Associated Traffic Signal Cabinet Equipment)

The Contractor shall furnish and install "Accessible Pedestrian Signal Systems". MnDOT approved "Accessible Pedestrian Signal Systems (APS)" are listed on the MnDOT Approved/Qualified Products List for Signals:

http://www.dot.state.mn.us/products/index.html

All Accessible Pedestrian Signal System components with the exception of the push button stations to be installed in the traffic signal system shall be delivered to the department at the MnDOT Central Electrical Services Unit (for approval and installation of the required components into the department furnished traffic signal cabinet) at least thirty (30) normal working days in advance of when the department furnished traffic signal cabinet is required on the job site. The Contractor shall direct the Central Electrical Services Unit to refer to **T.E. Request No.'s 5607, 5608, and 5609.**

The contractor shall ensure the order form found elsewhere in these special provisions is presented to the Accessible Pedestrian Signal System manufacturer so the appropriate Braille message will be added to the pedestrian information sign and the correct voice messages will be programmed in the pedestrian push button stations. A copy of this form should also be presented to the Central Electrical Services Unit when delivering the aforementioned APS components.

R. Pedestrian Push Button Stations

The Contractor shall furnish and install new pedestrian pushbutton stations in accordance with the Plan, at the locations in the Plan, and as directed by the Engineer.

S. Equipment Pads

The Contractor shall furnish and install equipment pads as detailed in the Plan, as specified in these Special Provisions, and as directed by the Engineer.

The equipment pads shall contain the following:

1. Traffic signal cabinets and control equipment (Systems "A", "B", and "C").

   (CABINETS AND CONTROL EQUIPMENT TO BE FURNISHED BY THE DEPARTMENT AND INSTALLED BY THE CONTRACTOR.)

2. Signal Service Cabinets (Systems "A", "B", and "C").

   (SIGNAL SERVICE CABINETS TO BE FURNISHED AND INSTALLED BY THE CONTRACTOR)

T. Signal Service Cabinets (with Battery Back-up Equipment) (No Batteries)

The Contractor shall furnish and install a signal service cabinet at System "A", "B", and "C" **with equipment that *provides* for future battery back-up. No batteries are to be installed for this project.** MnDOT approved signal service cabinets and battery back-up equipment are listed on the MnDOT Qualified Products List on the Office of Traffic, Safety, and Operations (OTSO) WEB site for Traffic Signals:

http://www.dot.state.mn.us/trafficeng/designtools/index.html

U. Loop Detector Splices

The Contractor shall furnish and install qualified loop detector splice encapsulation kits.

MnDOT approved Splice Encapsulation Kits are listed on the MnDOT Approved/Qualified Products Lists WEB site for Signals:

http://www.dot.state.mn.us/products/index.html

THE CONTRACTOR SHALL INSTALL LOOP DETECTOR SPLICES ACCORDING TO THE MANUFACTURER'S INSTRUCTIONS AND AS SPECIFIED ELSE WHERE IN THESE SPECIAL PROVISIONS.

SS-3.3 CONSTRUCTION REQUIREMENTS

A. Conduit Installation

Conduit shall be installed in accordance with MnDOT 2565.3D, except as follows:

1. Continuous Type HDPE Non-Metallic Conduit:

   Except for under existing pavements, underground Continuous Type HDPE Conduit shall be placed by trenching, stitching, plowing, or other method approved by the engineer.

   Under existing pavements, Continuous Type HDPE Non-Metallic Conduit shall be placed as specified in 2565.3D2b.

2. Rigid Non-Metallic Conduit Joints:

   The Contractor shall install appropriate sized long line couplings when installed under existing roadway surfaces

   The applied PVC joint cement shall be allowed to set-up for six **(6) hours** before pulling the conduit through a directional bored channel.

B. Handhole Installation

The Contractor shall install handholes in accordance with the provisions of MnDOT 2565.3E and as follows:

All handholes shall be backfilled **after** the frame casting and cover have been installed onto the handhole.

C. Anti-Seize Lubricant

The contractor must apply Brush on Anti- Seize lubricant to all threaded portions of the signal system prior to assembly. The following is list of assemblies that require anti-seize lubricant:

Mast arm pole standard anchor rods above concrete foundations
Mast arm pole to transformer base bolts
Traffic signal cabinet anchor rods above concrete foundations
Signal Service cabinet anchor rods above concrete foundations
Traffic signal pedestals anchor rods above concrete foundations

Traffic signal pedestal base and shaft
Pedestal base shaft set screws
Pedestal shaft caps
Pedestal base access door locking screw
Blind threaded inserts (rivet nuts)
Threaded hub and flange pole adaptor
Bolt on hub and flange
Straight and angle mount plumbizers
Pedestal reinforcing collars
Signal bracketing (where used)
APS mounting hardware and sign mounting hardware

Application of the brush-on anti-seize lubricant to all threaded portions of the signal system shall be to the satisfaction of the Engineer.

D. Equipment Pad Concrete Foundation

The equipment pad concrete foundation shall be installed at the location staked by the Engineer and shall be constructed as detailed in the Plans.

The cabinet concrete foundation for the Department furnished traffic signal cabinet and control equipment shall be installed as part of the equipment pad concrete foundation using Department furnished anchor rods, nuts, and washers to mount the cabinet. The anchor rods shall project above the concrete foundation to accommodate the13 mm (1/2 inch) thick gasket. The Contractor shall install the Department furnished rubber gasket sections between the bottom of each cabinet base and the concrete foundation. The Contractor shall leave one 13 mm (1/2 inch) gap in the gasket to ensure proper water drainage.

The cabinet concrete foundation for the signal service cabinet type SSB shall be installed as part of the equipment pad concrete foundation using anchor rods, nuts, and washers supplied by the SSB cabinet manufacturer. The anchor rods shall project above the concrete foundation to accommodate the13 mm (1/2 inch) thick gasket. The Contractor shall install the cabinet manufacturer supplied rubber gasket sections between the bottom of each cabinet base and the concrete foundation. The Contractor shall leave one 13 mm (1/2 inch) gap in the gasket to ensure proper water drainage.

E. Signal Service Cabinets

The Contractor shall install each signal service cabinet type SSB on each equipment pad concrete foundation as detailed in the Plan and to the satisfaction of the Engineer.

The contractor shall fill out the electric service information form (found elsewhere in these Special Provisions) for traffic signal systems.

The Contractor shall provide, to the Engineer prior to final acceptance of the project, five (5) copies of the electric service information form for each traffic signal system and the copies shall be distributed, by the Engineer, as follows:

1. MnDOT Metro Electrical Services Unit
2. MnDOT Traffic Electrical Systems Engineer.
3. MnDOT Metro Traffic Signals and Lighting Engineer.
4. City of Burnsville.
5. County of Dakota.

The Contractor furnished "electrical service information form for traffic signal systems" shall be considered incidental work.

F. Preformed Rigid PVC Conduit Loop Detector Installation

The Contractor shall install loop detectors in rigid PVC conduit in accordance with Standard Plate 8132; as marked by the Engineer; and with the applicable provisions of MnDOT 2565.3G.

G. Pedestal Reinforcing Collar (Wind Collar) Installation

The Contractor shall clamp each reinforcing collar around the top of the pedestal base by using two (2) 5/16" Socket Head Bolts per section (see figure below). Each section shall have a 5/16" pilot hole for drilling into base. A 5/16" x ¾" Roll Pin shall be driven through the collar into the base (flush to allow ¼" penetration into the base) to prevent the pedestal shaft from turning in the pedestal base.

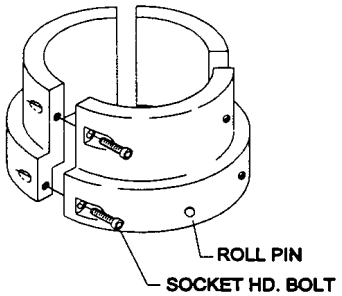

H. Pedestrian Push Button Stations

The concrete foundation for the pedestrian push button stations shall be installed at the locations staked by the Engineer and shall be constructed in accordance with the detail in the Plan for a separate mounting.

PEDESTRIAN PUSH BUTTON LOCATIONS

> In certain locations, it may be possible to use a signal pole as the mount for a pedestrian push button, depending upon the location of the signal pole installation and the elevation above the sidewalk that the signal pole is installed at. If a signal pole is used for a pedestrian push button mount, the Contractor must still meet the requirements stated in the Special Provisions. Any unused pedestrian push button stations shall be delivered to MnDot Central Electrical Services Inventory.

I. BLANK

J. "As Built Plan"

The Contractor shall furnish five (5) copies of an "As Built Plan" that contain any **changes** in the following:

--- types of foundations
--- pole locations
--- length of mast arms
--- signal bracketing or signal mounts
--- conduit sizes
--- conduit runs
--- number of handholes
--- handhole locations
--- wiring
--- size of detection
--- type of detection
--- cable path
--- other items as required by the Engineer

Any discrepancy or additions between the final plan and how the signal was actually built **must be indicated** on the "as built plan".

The "as built Plan" shall be in a form that is satisfactory to the Engineer.

The five (5) copies shall be distributed by the Engineer as follows:

1. MnDOT Metro Electrical Services Maintenance Unit.
2. MnDOT Metropolitan District Traffic Signal Operations Engineer.
3. MnDOT Metropolitan District Traffic Signal and Lighting Design Engineer.
4. County of Dakota.
5. City of Burnsville

K. Wiring

All wiring shall be in accordance with the Plan and MnDOT 2565.3J, except as follows:

1. Vehicle and Pedestrian Signal Faces

   For horizontally mounted terminal blocks termination of the signal control cable running from the pole base into signal face shall be terminated with the forks of the spade lug pointing down.

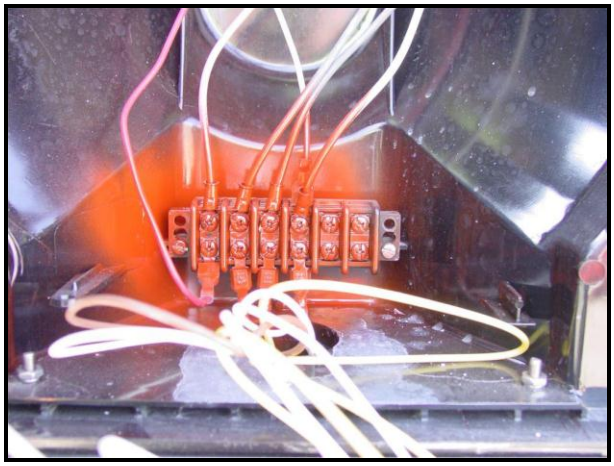

   For vertically mounted terminal blocks termination of the signal control cable running from the pole base into signal face shall be terminated with the spade lug mounted horizontally and a loop of wire extending up from the terminal block at least 3 inches above the block and then a loop back down to exit the head for termination in the pole base.

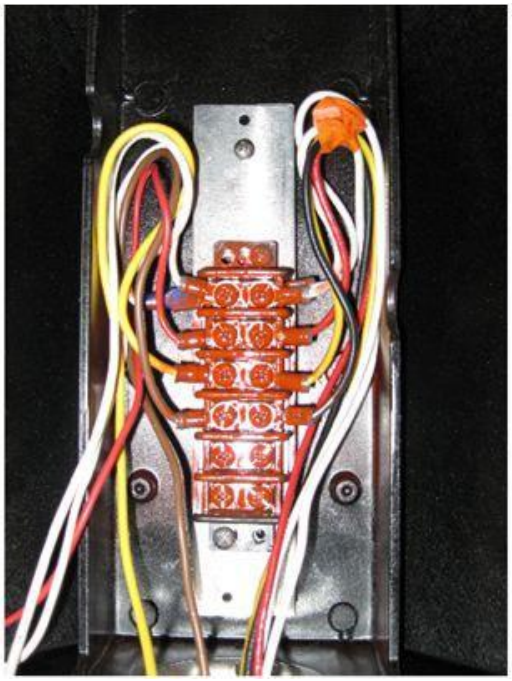

After the conductors have been properly terminated the entire terminal block and the spade lugs shall be sprayed with pole base terminal block coating.

MnDOT approved Pole Base Terminal Block Coatings are listed on the MnDOT Approved/Qualified Products Lists WEB site for Signals:

http://www.dot.state.mn.us/products/index.html

The coating of the terminal block shall include spraying the terminal connections and the exposed wire ends where crimped to the spade connector.

2. Labeling

Labels to identify cables and conductors, except the individual conductors terminated at the cabinet fuse panels, shall consist of white vinyl adhesive tape wrapped around the cable. The labeling shall be hand written on the vinyl adhesive tape or produced with a label maker. If label marking is handwritten, the labeling shall be accomplished by utilizing a black permanent marker, in such a manner, that the markings are legible to the satisfaction of the Engineer. Labels produced with a label maker shall be suitable for use in wet locations, and this label must wrap around the cable one complete revolution with some overlap.

Labels to identify the individual conductors terminated at the cabinet fuse panels, shall utilize either machine printed labels, embossed plastic labels, vinyl adhesive pre-printed labels, or sleeve type labels placed around each conductor.

L. Bonding and Grounding

All bonding and grounding shall be in accordance with the provisions of MnDOT2565.3H, except as follows:

1. All ground rod electrodes shall be UL Listed.

2. All ground rod electrodes shall be a single piece non threaded 5/8 inch diameter by 15 foot long copper clad ground rod.

3. The ground rod electrode in a pedestal foundation shall be placed slightly off center in the pedestal foundation as specified in the Plan.

4. The ground rod electrode for signal poles (PA85, PA90, PA100) shall be placed in the nearest hand hole adjacent to the signal pole foundation as shown on the field wiring diagram of the plan. Grounding of the signal poles shall be accomplished by bonding together the #6 AWG, stranded, insulated green grounding conductor that runs from the traffic signal cabinet to the ground rod electrode and thru to the pole base. The ground rod electrode shall be placed in the hand hole with the top of the ground rod being installed approximately 3 inches below the bottom of the hand hole cover as specified in the Plan.

5. Connection of the daisy chain #6 AWG stranded insulated green grounding conductor that runs from the adjacent signal poles ground rod electrode to the next signal pole's ground rod electrode shall be welded to the ground rod electrode with a T type connector utilizing a 3 wire tap connection. A 2 wire tap connection shall be utilized at the end of the daisy chain run.

6. Bonding of all ground rod electrodes to the #6 AWG stranded, insulated green conductor coming from the traffic signal cabinet and running to the signal pole base shall be accomplished by exothermic welding.

7. The exothermic welding is achieved by:

    a) Stripping off enough insulating material from the #6 AWG stranded green insulated grounding wire to ensure the insulation does not burn or melt during the welding process.

b) Using a manufacturer's specific sized mold for exothermic welding of a #6 AWG stranded copper wire being welded to a non threaded 5/8 inch copper clad ground rod electrode. This mold must be a T type configuration with a 3 wire tap or 2 wire tap as specified in the Plan.

c) All exothermic welds shall be made in strict adherence to the weld manufactures instructions for material preparation, welding and testing of the exothermic weld.

8. Bonding of the #6 AWG stranded, insulated green grounding conductor to the signal pole base 5/16" grounding stud shall be accomplished by use of a UL listed Re-usable screw type active clamping ground lug with a tang that connects to the 5/16" signal pole base grounding stud.

9. The last paragraph on Page 650 shall read as follows:

Metal poles, pedestals, cabinets, and other structures requiring a ground rod electrode shall be bonded to the ground rod electrode by a No. 6 stranded copper grounding electrode conductor. One end of the bonding jumper shall be attached to the lower part of the pole, pedestal, cabinet, or structure shaft or base and the other end attached to the ground rod electrode by an exothermic weld.

10. The first full paragraph on Page 651 shall read as follows:

For bonding and grounding in all conduit systems, a No. 6 stranded insulated green equipment grounding conductor shall be installed with all electrical circuits. Where non-metallic conduit is to be installed for future use, the equipment grounding conductor may be omitted.

N. Oxide Inhibitor

The Contractor shall apply an oxide inhibiting agent to all No. 6 grounding connections after assembly and final connection.

O. BLANK

P. Accessible Pedestrian Push Button Units

Accessible pedestrian push button units shall be installed at the locations as indicated on the plan. Each push button unit contains three (3) custom components; sign with Braille, push button arrow direction and a custom voice message. When installing the push button units careful attention to must be paid so the correct button is placed in the proper location. The button must be mounted facing the pedestrian landing.

The contractor shall also follow the manufactures installation requirements.

The Contractor shall apply to the APS wire termination blocks, after wire installation, an electrical insulating coating. MnDOT approved Electrical Insulating Coatings are listed on the MnDOT Approved/Qualified Products Lists WEB site for Signals:

http://www.dot.state.mn.us/products/index.html

The Contractor shall apply a bead of 100% clear silicone sealant around the top of the push button station housing where the push button comes in contact with the pole shaft.

Q. Pole Sealant

The Contractor shall place an adequate amount of 100% clear silicone sealant between the pole base plate and where it meets the transformer base to ensure a moisture proof seal between the pole and the transformer base. This seal shall be to the satisfaction of the Engineer.

R. Luminaires & Lamp Labeling

Luminaires and Lamps shall be marked according to 3810.2A. The term permanent marker shall be modified as follows "black oil based paint marker"

S. Signal Pole Installation to Concrete Foundation Anchor Rods

The Contractor shall install mast arm pole standards to concrete foundations anchor rods in accordance with the following installation procedure:

1. Clean exposed part of anchor rods with a wire brush or equivalent.
2. Assure clean anchor rods and that nuts will spin freely along entire length of all anchor rods.
3. Lubricate anchor rod threads with brush on anti-seize compound.
4. Install heavy hex leveling nuts and set them to level.
5. Install 1st set of washers, place base/pole on anchor rod cluster, install 2nd set of washers.
6. Install heavy hex top nuts and hand tighten.
7. Using "full force" and a standard wrench, or a few impacts of an impact wrench, tighten all top nuts in any order.

8. **(Critical)** Using "full force" and a standard wrench, tighten all leveling nuts in any order.

9. Mark positions of all top nuts in relation to its adjacent bolt. Using appropriate equipment tighten all top nuts an additional 1/6 turn beyond tightening achieved in steps 6 and 7.

10. After 48 hours, with the entire mast arm pole standard [including mast arm(s), transformer base, and, if applicable, the luminaire extension] being completely assembled and installed, the nuts shall be checked to assure they have maintained tightness. If additional tightening is required, follow Steps 7 thru 9.

T. Pole Base Connector Crimping Tool

The Contractor shall use the prescribed pole base connector crimping tool by the manufacturer, with no exceptions, as per instructions from the manufacturer.

U. Salvage Video Detection Camera and Luminaire Extension

The Contractor shall salvage an existing video camera, luminaire extension, and all related items as indicated on the Plan detail sheet from the old in-place signal system being removed on Trunk Highway No. 13 at County State Aid Highway No. 5 and shall re-install the video camera, luminaire extension, and related items on Pole 2 at System "B" as indicated in the Plan. The Contractor shall furnish and install any and all new material and equipment to make the salvaged camera operational as indicated in the Plan and to the satisfaction of the Engineer. Labor and materials shall be included in Pay Item No. 2565.511 (TRAFFIC CONTROL SIGNAL SYSTEM "B").

1. The camera must be properly aimed for optimal field of view.
2. The video camera and equipment shall be installed by qualified personnel approved by the video equipment manufacturer.
3. The contractor is responsible for arranging with MnDOT Metro District personnel a field review to verify that the video camera is working correctly. This review will include a view of the live video image.

V. Sign Panel Warning Stickers

The Contractor shall install Department furnished warning stickers on new sign panels in accordance with MnDot 2564.3H. The Contractor shall give 30 days' advance notice to MnDot Metropolitan District Headquarters by contacting Jeff Streeter at Telephone No. (651) 366-5191 prior to picking up the Department furnished warning stickers.

W. Activating Signals

MnDOT Specification 2565.3W is hereby deleted and replaced with the following:

When the traffic control signal system is to be placed in operation, all vehicle signal faces and pedestrian signal faces shall be aimed as directed by the Engineer. The Contractor shall notify the Engineer at least 48 hours in advance of the scheduled traffic signal turn-on.

The traffic control signal system will be turned on by MnDOT personnel, unless otherwise authorized by the Engineer. The Contractor shall be present at time of turn on to provide assistance to ensure the traffic control signal system is operating correctly and in a safe manner. The Contractor shall provide all necessary parts and labor to rectify any malfunctioning components of the traffic control signal system installed by the Contractor. This requirement would not include Department furnished material/components, except if the Department furnished material/components were malfunctioning, or damaged, due to Contractors operations. All components of the signal system, including the emergency vehicle preemption (EVP) and the traffic control interconnection, must be completely operational to the satisfaction of the Engineer before the actual signal system turn on is performed.

The Contractor shall not turn the signal system ON or OFF, or place in flashing mode of operation, without the specific approval of, and in the presence of the Engineer.

X. Removals

When directed by the Engineer, the Contractor shall remove and salvage, or dispose of all items of the existing traffic control signal system in accordance with the applicable provisions of MnDOT 2565.3U; the applicable provisions of MnDOT 2104; and the following:

All underground conduit, except under roadway surfaces, shall be removed and disposed of as specified herein. Conduit under roadway surfaces may be abandoned in place, unless otherwise directed by the Engineer to be removed and the following:

1. After the cabinet and control equipment is de-energized and power conductors disconnected, the Contractor shall prevent damage to the cabinet and control equipment as follows:

    a) Unplug and remove all removable control equipment (i.e., controller unit, detector amplifier units, conflict monitor, load switches, etc.) from the cabinet. The control equipment removed from the cabinet shall be suitably packed to prevent damage to the equipment during transportation.

b) Connecting harnesses for the equipment shall be coiled or grouped together and secured to a shelf in the cabinet. The harnesses can be taped, wired, or tie wrapped, but shall be done by a method that prevents the harnesses from being pinched in the door when the door is closed, or from dropping below the bottom of the cabinet when it is lifted off the foundation.

c) The cabinet shall be secured in an upright position at all times (removing from foundation, transporting, loading, and unloading) to insure that the cabinet will not tip and be damaged.

2. The salvaged traffic signal cabinet and control equipment shall be disassembled as specified herein and shall be delivered to the Department at the MnDOT Central Electrical Inventory Center at the location specified elsewhere in these Special Provisions. The Contractor shall notify Mr. Mike Schroeder (612-366-5719) of MnDOT Central Electrical Inventory Center at least three (3) normal working days in advance of the time the Contractor intends to deliver the salvaged materials. **THE ENGINEER SHALL BE NOTIFIED IN ADVANCE OF NOTIFICATION TO MR. SCHROEDER**.

   The Contractor shall obtain a salvaged material receipt from the MnDOT Central Electrical Inventory Center indicating that MnDOT has received the salvaged material. <u>The Contractor shall give the project Engineer a copy of this receipt for the permanent project records</u>.

3. All items, not salvaged, shall be removed entirely and disposed of outside the Right-of-Way in any manner that the Contractor may elect subject to the provisions of MnDOT 2104.3C3, and as follows:

   MnDOT no longer salvages mast arm pole standards or traffic signal Pedestal shafts and bases. The Contractor shall remove and dispose of the mast arm pole standards and pedestal shafts as specified herein.

   After removal, the mast arm pole standards (transformer base, pole shafts, mast arms, and luminaire extensions) shall be disassembled and cut-up (or other method that renders the mast arm pole standards unusable) to the satisfaction of Engineer. After the mast arm pole standards have been prepared for disposal, the Contractor shall dispose of the mast arm pole standards and traffic signal pedestals as follows:

The mast arm pole standards and the traffic signal pedestals (pedestal shafts and pedestal bases) may have been painted with lead-based paint. If this is the case, the Contractor shall be responsible for the proper handling, transportation, and disposal of the mast arm pole standards and traffic signal pedestals as hazardous waste and the handling, transportation, and disposal of these items shall be in accordance with Occupational Safety & Health Administration (OSHA) and the Minnesota Pollution Control Agency (MPCA) regulations.

The Contractor certifies that he or she is familiar with, and will comply with, the applicable requirements in OSHA 29 CFR 1926.62 and Minnesota Rules Chapter 5206, 7025, 7035, 7045 relating to disposal and/or the removal of these lead painted mast arm pole standards and traffic signal pedestals.

The Contractor shall provide to the Engineer a completed "Contractor Certification of Disposal" form included elsewhere in these Special Provisions.

4. All resulting excavation shall be backfilled and the backfilling and compaction shall be like in kind to approximately the same density as the adjoining ground. Any roadway surfacing (concrete pavement, bituminous surface, or gravel surface, including underlying base courses), sidewalks, curb and gutters, sod, etc., removed by the construction operations shall be replaced in kind by the Contractor, all at his/her own expense.

   All removals of materials of the existing signal system and salvaging as required, the disposal of non-salvageable materials, and backfilling, all in accordance with the foregoing, shall be included in the Pay Item No. 2565.511 (TRAFFIC CONTROL SIGNAL SYSTEM "B").

Y. Galvanized Pole or Mast Arm Finish Repair

When the galvanized finish is damaged the repair must be in accordance with ASTM A780 Annex A2.

Approved zinc rich paints can be found on the MnDOT approved products list for signals.

http://www.dot.state.mn.us/products/index.html

SS-3.4 MEASUREMENTS AND PAYMENTS

Removing, salvaging, reinstalling, and disposing of items of one (1) existing traffic control signal system, furnishing and installing materials and electrical/electronic equipment; and installing Department furnished materials as specified herein, all to provide three (3) new complete operating full-traffic-actuated fiber-optic cable interconnected traffic control signal systems---

1. **SYSTEM "A"** - at the intersection of County State Aid Highway No. 5 (Kenwood Trail) and Williams Drive/Greenwood Drive, Burnsville, Dakota County, and

2. **SYSTEM "B"** - at the intersection of Trunk Highway 13, South Ramp and County State Aid Highway No. 5 (Kenwood Trail), Burnsville, Dakota County, and

3. **SYSTEM "C"** - at the intersection of Trunk Highway 13, North Ramp and County State Aid Highway No. 5 (Kenwood Trail), Burnsville, Dakota County,

as contained in these Special Provisions and in the Plan will each be measured as an integral unit and each paid for as specified in MnDOT 2565.4 and MnDOT 2565.5 respectively for Item No. 2565.511 (TRAFFIC CONTROL SIGNAL SYSTEM____).

SS-4 (2565) EMERGENCY VEHICLE PREEMPTION SYSTEMS

This work shall consist of furnishing and installing emergency vehicle preemption (EVP) systems at the intersections of:

1. **SYSTEM "A"** - at the intersection of County State Aid Highway No. 5 (Kenwood Trail) and Williams Drive/Greenwood Drive, Burnsville, Dakota County, and

2. **SYSTEM "B"** - at the intersection of Trunk Highway 13, South Ramp and County State Aid Highway No. 5 (Kenwood Trail), Burnsville, Dakota County, and

3. **SYSTEM "C"** - at the intersection of Trunk Highway 13, North Ramp and County State Aid Highway No. 5 (Kenwood Trail), Burnsville, Dakota County,

in accordance with the applicable provisions of MnDOT 2565; with the Plan; and as follows:

SS-4.1 GENERAL

A. All applicable provisions of the current edition of the National Electrical Code shall apply.

B. The Contractor shall furnish rack mounted EVP phase selectors (or other approved equal EVP equipment to be installed in the traffic signal cabinet) to be installed in the Department furnished cabinet by MnDOT personnel.

All EVP phase selectors (or other approved equal EVP equipment to be installed in the traffic signal cabinet) shall be delivered to the Department at the MnDOT Central Electrical Services Unit (for approval, and for installation into the Department furnished traffic signal cabinet) at least thirty (30) normal working days in advance of when the Department furnished traffic signal cabinet is required on the job site.

SS-4.2 MATERIALS

A. EVP Mounting Equipment

Emergency Vehicle Preemption mounting equipment shall be as follows:

1. EVP Round Outlet Box

   The EVP round outlet box for wire splicing shall be as follows:

   a. Shall be sized nominal 4 inch diameter by nominal 1-1/2 inch deep
   b. Shall be cast aluminum.
   c. Shall be UL Listed.
   d. Suitable for wet locations.
   e. Shall have four (4) threaded openings to support ¾ inch conduit: top, bottom, and the two sides, all with threaded caps.
   f. Shall have one (1) threaded opening to support a ¾ inch conduit on back of outlet box with threaded cap.
   g. Shall have a galvanized or zinc plated screw-on cover with weather seal and suitable for wet locations.
   h. Shall have threaded nipples with locking washers sized to fit the round outlet box for the all attached appurtenance's.

EVP Conduit Outlet Body

The EVP conduit outlet body for mounting the EVP detector unit to the EVP round outlet box shall be as follows:

a. Shall be 90 degrees.
b. Shall have a screw-on cover with weather seal.
c. Shall have male threaded end and a female threaded end.
d. Shall be UL Listed.
e. Suitable for wet locations.

2. EVP Verify Lamp Holder

MnDOT approved EVP Verify Lamp Holders for EVP confirmatory lights are listed on the MnDOT Approved/Qualified Products Lists WEB site for Signals:

http://www.dot.state.mn.us/products/index.html

A picture of the individual EVP components is found elsewhere in these Special Provisions.

B. EVP Detector Cable

Emergency Vehicle Preemption (EVP) detector cable shall be in accordance with the provisions of MnDOT 3815.2C5, except that the shield shall be aluminized polyester with a minimum .170 inch overlap and shall be suitable for use in 75°C wet or dry locations.

C. Emitter Activated Emergency Vehicle Preemption (EVP) Systems

MnDOT approved Emergency Vehicle Preemption Systems – Emitter Activated Preemption Systems are listed on the MnDOT Approved/Qualified Products Lists WEB site for Signals:

http://www.dot.state.mn.us/products/index.html

SS-4.3 CONSTRUCTION REQUIREMENTS

Emergency Vehicle Preemption (EVP) Installation

The Contractor shall install EVP detectors and EVP indicator lamps at the locations indicated in the Plan in accordance with the provisions of MnDOT 2565.3S.

SS-4.4 MEASUREMENTS AND PAYMENTS

Furnishing and installing emergency vehicle preemption (EVP) system at the intersections of:

1. **SYSTEM "A"** - at the intersection of County State Aid Highway No. 5 (Kenwood Trail) and Williams Drive/Greenwood Drive, Burnsville, Dakota County, and

2. **SYSTEM "B"** - at the intersection of Trunk Highway 13, South Ramp and County State Aid Highway No. 5 (Kenwood Trail), Burnsville, Dakota County, and

3. **SYSTEM "C"** - at the intersection of Trunk Highway 13, North Ramp and County State Aid Highway No. 5 (Kenwood Trail), Burnsville, Dakota County,

as specified herein will each be measured as an integral unit complete in place and operating and will each be paid for under Item No. 2565.601 [EMERGENCY VEHICLE PREEMPTION (EVP) SYSTEM____] at the Contract price per LUMP SUM, which price shall be compensation in full for all costs incidental thereto.

SS-5 TRAFFIC CONTROL INTERCONNECTION

This work requires placing a Signal Communications fiber-optic cable (Armored Fiber-Optic Pigtail) between the proposed signal control cabinets of Systems “A”, “B”, and “C”; and between System “A” and the intersection of Williams Drive and Morgan Avenue. The fiber-optic cable between System “B” and an in-place TMS Vault will be included in the TMS Plan for this project. Work includes furnishing and installing an armored 6-SM fiber-optic cable with related conduit, fittings, and fiber vaults; furnishing and installing pigtail terminations; connecting patch panels to ends of the cables in the traffic control signal cabinets and testing the cable.

A State Furnished Materials

The Department will furnish to the Contractor (at no expense to the Contractor) the following materials and electrical equipment for the Contractor to install in the existing cabinet at the intersection of Williams Drive and Morgan Avenue:

1. 1 Ethernet Switch-RUGGEDCOM (RS900g-HI-P-2SFF-XX)

2. 2 SFP Modules

3. 1 Power Cord

4. 1 Ethernet Jumper

The materials and electrical equipment described in (A) above will be furnished to the Contractor at the MnDOT Central Electrical Services Unit, 6000 Minnehaha Avenue, St. Paul, MN, 55111. The Contractor shall request from the Central Electrical Services Unit the materials and electrical equipment listed in (A) above. The Contractor shall direct the Central Electrical Services Unit to refer to **T.E. Request No. 5652**. The Contractor shall request these Department furnished materials at least thirty (30) normal working days in advance of the time the Contractor needs them on the project. The Contractor shall further notify Mr. Mike Schroeder (651-366-5719) or Mr. Mark Harrington (651-366-5720) of the MnDOT Central Electrical Inventory Center at least three (3) normal working days in advance of each time the Contractor intends to pick up materials and electrical equipment. The Contractor shall pick up the Department furnished materials and electrical equipment at the above specified location and haul them to the job site. **THE ENGINEER SHALL BE NOTIFIED IN ADVANCE OF NOTIFICATION TO MR. SCHROEDER OR MR. HARRINGTON.**

B Abbreviations

The provisions of MnDOT 1101 are hereby supplemented with the following:

The following is added to MnDOT 1101.1 GLOSSARY OF ABBREVIATIONS:

ABS	Acrylonitrile Butadiene Styrene
CPVC	Chlorinated Polyvinyl Chloride
DC	Direct Current
EIA	Electronic Industries Alliance
FDF	Fiber Distribution Frame
FNMC	Flexible Non-Metallic Conduit
FO	Fiber Optic
FOTP	Fiber Optic Test Procedure
HDPE	High Density Polyethylene
HOV	High Occupancy Vehicle
JB	Junction Box
KA	Kilo Amperes
LLDPE	Linear Low Density Polyethylene
LED	Light Emitting Diode
MDPE	Medium Density Polyethylene
MM	Multimode
ODTR	Optical Time Domain Reflectometer
OFSTP	Optical Fiber System Test Procedure
PE	Polyethylene

PTZ	Pan, Tilt, Zoom
SGU	Sheath Grounding Unit
SM	Single Mode
SNR	Signal to Noise Ratio
SS	Stainless Steel
TIA	Telecommunications Industries Association
TWP	Twisted Wire Pair
XLP	Crosslinked Polyethylene
V	Volt
ZDW	Zero Dispersion Wavelength

UNITS

°F	Degree Fahrenheit

SYMBOLS

π	pi (3.1416)
<	less than
>	greater than

CONVERSIONS

1 inch	25.4 millimeters (mm)
1 $inch^2$	645 mm^2
1 $inch^3$	16,400 mm^3
1 yd3	0.76 m^3
1 liter	61 in^3
1gallon	3.785 liters
1 pound mass	0.4536 kg

C Definitions

The provisions of MnDOT 1103 are hereby supplemented with the following:

AS BUILT PLAN

Copies of the original Plan and Plan Detail sheets with changes and additions to the Contract marked in the color red.

SPECIFICATIONS
Detailed descriptions of a device or devices including physical and operating characteristics.

SUBMITTAL
Documentation of proposed, materials, products, equipment or processes. Additionally, it shall include shop drawings, wiring diagrams, and test reports

SCHEMATICS
Diagrams using standard symbols to show the function.

HAS MET
A Manufacturer's product that has been in conformance with the specifications required in these Special Provisions. The Contractor may submit any other Manufacturer's product of equal quality for approval.

D County Fiber Construction Contact

The County has assigned a contact (County Contact) for this project involving construction and components of a fiber interconnect system. Ken Raway is the contact from Dakota County Traffic Operations. He can be reached at: Office-952.891.7929 or Cell-651.755.3116
e-mail: Ken.Raway@co.dakota.mn.us.

The County Fiber Construction Contact will be available for the following:

(A) Recommend approval/disapproval of fiber components and/or fiber construction methods to the project engineer.

(B) Help to resolve Plan and Special Provision discrepancies.

(C) Provide technical guidance to Contractors as directed by the Engineer.

(D) Shall be present when locations are staked or flagged for FO cable and/or FO splice vaults, .

(E) Assist with fiber interconnect construction inspection.

E Fiber-Optic Connections

The Contractor shall make all fiber-optic cable splices and connections to the patch panels in the traffic signal cabinets. Final connections will be made by Dakota County (Ken Raway) personnel to make the traffic control signal system operational.

F Materials

The following provisions shall supplement MnDOT 2550.2A:

All Materials, work methods, and equipment shall comply with the standards of the National Electrical Manufacturers Association, Electronic Industries Association, Underwriters Laboratory, Inc., National Electrical Code; Telecommunications Industries Association, local codes and ordinances, the requirements of the Contract, these Special Provisions, and the Plan.

The Contractor warranties all F&I materials and workmanship as well as workmanship on materials that were paid for as an Install item for one year from completion and acceptance of the work. The warranty period begins when the Contractor completes all construction obligations, documented as the Final Completion Date on the Change in Construction Status report.

Use stainless steel hardware (e.g. mounting bolts, nuts, washers, and external hinges, etc.) on all outdoor components (vaults, cabinets, handholes, etc.).

The Contractor is responsible for rounding and smoothing sharp corners and edges of all F&I fiber components.

G Interconnect Project Submittal and FO Test Documentation

Interconnect Project Submittal and FO Test Documentation shall be reviewed by the County Contact representative assigned to the project. The representative will evaluate and make recommendations to the Engineer regarding acceptance of the required documentation. Contact information will be provided at the Pre-construction meeting.

H Grounding

The following provisions shall apply to Grounding:

SINGLE POINT GROUNDING

All grounded devices shall connect to one single piece ground rod, via the shortest and straightest route. Connect the devices' chassis and electrical grounds at a ground buss before connecting them to the earth ground rod. Connect the ground busses via conductors that meet the requirements of SINGLE POINT GROUNDING.

FO CABLE

The following provisions shall apply to the grounding of Fiber Optic Cable:

(A) One SGU is used in the following locations:

The Contractor shall furnish and install a SGU to ground the outer shield and armor of the fiber optic cable to the equipment ground buss in the Traffic Signal Control cabinets and fiber vaults.

(B) The Contractor shall clean each grounding component with 300-grit emery cloth before bonding and apply a mineral oil based oxide inhibitor to the bond area.

(C) Grounding of fiber optic cables must be within the first five feet after the conduit entrance.

(E) Has Met
The following item has met the above specifications

Oxide Inhibitor: Ideal Industries, Inc.: Noalox

I BLANK

J Labeling

The following provisions shall apply to Labeling:
Secure identifying labels to each fiber, cable, component, cabinets in the manner described in the Plan and these Special Provisions.

Contractor shall not use wire ties for labeling cables.

FIBER OPTIC CABLES

The following provisions shall apply to labeling Fiber Optic Cables:

Colored electrical tape shall be applied both ends of Trunk FO and pigtail cables to indicate either a pigtail or the direction the majority of the FO Cable travels from a structure. The direction of the cable will not always coincide with the initial direction the cable leaves a structure. The color of the tape shall represent the following:

a. Northbound-NB (blue)
b. Southbound-SB (green)
c. Eastbound-EB (yellow)
d. Westbound-WB (orange)
e. Pigtails-(White)

Descriptive identifiers shall be written on the colored tape with a laundry marking pen.

Descriptive identifiers shall include a combination of the following:

a. Identify the nearest meter mark.
b. Identify the FO Cable number.
c. Identify the item that the fiber is traveling to by name. (e.g. Cab. 94-212.64, Cam 808, CMS 94-206.70, etc…)
d. Identify the fiber count and mode.
e. Identify the direction the majority of the FO Cable travels from a structure. The direction of the cable will not always coincide with the initial direction the cable leaves a structure.

K Fiber Distribution Components

The following provisions shall apply to labeling Fiber Distribution Components:

(A) The Contractor shall label indoor pigtail six-paks on the outer jacket at the Splice Panel tray/wheel and inside the Patch Panel to indicate the trunk cable ID number and which six fibers are spliced to the six-pak (e.g. 94-12 SM7-12).

(B) Patch panels shall be labeled on the front indicating the FO Cable number, direction, and the fiber count.

(C) Label the front of the splice panels with the fiber optic cable number, direction, and fiber count.

(D) Label splice trays with the cable ID and fiber numbers contained in the tray.

(E) Label the front of the patch panels with the fiber optic cable number, direction, and fiber count.

L Project Testing and Documentation Submittals

This work shall consist of Project Component Testing and Documentation Submittals, which shall be in accordance with the MnDOT Standard Specifications, MnDOT Standard Plan/Plates, the Plan, and the following:

Project Testing and Documentation Submittals shall be presented directly to the Engineer. Project Testing and Documentation Submittals shall be presented, as a complete package unless prior authorization is made with the Engineer. A complete package shall be defined as one assembled submittal for components and one assembled submittal for testing, which shall include all required documentation. No payment for any item requiring submittal shall be made until a submittal package is received and approved by the Engineer.

Project Testing and Documentation Submittals are required for the following items:

(A) Fiber Components.

(B) Testing of FO Cable.

FIBER COMPONENTS

The following provisions shall apply to project component testing and documentation submittals for Components:

(A) Component Documentation Submittals shall be submitted to the Engineer within two weeks subsequent to contract approval. **The Contractor shall be subject to a daily charge assessed at a rate of $200.00 per day for each day or portion thereof with which the Engineer determines that the Contractor has not complied**. The Engineer reserves the right to allow the Contractor greater than two weeks after contract approval to make submittals.

(B) The Contractor shall submit two sets of component specifications and/or shop drawings for each project component, assembled or whole, to the Engineer. The Contractor shall forward any MnDOT recommended revisions to the Manufacturer.

(C) Two separate copies of project Component documentation shall be submitted as a complete and organized package unless otherwise directed by the Engineer.

(D) The Engineer will approve or reject submittals within two weeks of receipt. The Fiber Component Documentation Submittal package shall be approved by the Engineer prior to installation or payment for the component.

(E) Project Component documentation submittals shall include the manufacturer's name, manufacturer's specification, and/or detailed drawings for all items listed on the SUBMITTAL HAS MET CHECK-OFF LIST found elsewhere in these special provisions.

(F) It is not necessary to submit manufacturer's information for components already identified as meeting the specification in the "has met" statement.

(G) The Contractor shall complete the check-off list for "Has Met" items and include this list as part of the Project Documentation Component Submittal package. See SUBMITTAL HAS MET CHECK-OFF LIST elsewhere in these special provisions.

FO CABLE TESTING

The following provisions shall apply to project component testing submittals for FO Cable:

(A) The Contractor shall use the "Fiber Optic Schematic" sheets in the Plan as a template for recording power meter and OTDR test data as well as the physical characteristics of the FO cable and FO cable run.

(B) FO Cable Test parameters are identified in a later section of this document.

(C) Documentation of test equipment calibration and certification shall be submitted as part of the Project Documentation Submittal along with the test results. The calibration certificate shall be dated no more than one year prior to the last date of FO cable testing. Fiber optic cable testing shall be rejected if calibration certificates are out of date.

(D) The Contractor shall utilize a Manufacturer-recommended "OTDR Trace Analysis" and a "Power Meter Report" software program or a single software program that is a combination of "ODTR Trace Analysis" and "Power Meter Report". The Contractor shall identify the software to MnDOT as part of the Project Documentation Submittal. If MnDOT does not already own a copy of the proposed software, the Contractor shall provide MnDOT with a licensed copy.

(E) The Contractor shall notify the Engineer prior to beginning the FO system testing. The Contractor shall provide all test documentation electronically on a CD. The Contractor shall use MnDOT's file naming convention for OTDR electronic test files. The Engineer may observe each test.

(F) OTDR electronic files shall be stored under a directory named by the highway number. These files must include the following items:

a. Date of each test completed.
b. The "Index of refraction" for the FO cable as recorded on the cable spool by the manufacturer.
c. File names and notes as described by the MnDOT file naming convention. See FIBER OPTIC SCHEMATIC EXAMPLE DETAIL elsewhere in these special provisions.

(G) The Contractor shall provide a test summary describing the following items:

a. Final measurements that are out of range.
b. Engineer and County Contact approved changes in specified methods.
c. OTDR manufacturer, equipment model number, and last date calibrated.
d. Dates of tests performed by both Power Meter & OTDR.
e. Special circumstances.

(H) The Contractor shall provide the Engineer with the Manufacturer's reel (spool) test documentation.

AS-BUILTS

The Contractor shall submit As-built drawings plan sheet modifications. These marked up Plan sheets are meant to satisfy the need for as-built data. These sheets do not satisfy the Contractor's responsibilities with regard to Gopher State One Call.

SUBMITTAL HAS MET CHECK-OFF LIST

The Contractor shall complete the check-off list found elsewhere in these special provisions for "has met" items and include this list as part of the submittal package. The Contractor may choose to submit products of equal quality to the Engineer for County Contact approval.

M Industry Accepted Lubricants for All Cables

The following provisions shall apply to Industry Accepted Lubricants for all Cables:

The "Industry Accepted Lubricants" referenced in 2550.3, used during cable pulling operations are compatible with cable insulation materials and do not deteriorate the cable insulation or performance.

Lubricants shall not contain wax or grease.

The appropriate lubricant shall be applied as specified by the manufacturer for its intended use.

HAS MET

The following items have met the above specifications:

Lubricants:

a. Electric and Electronic Cable: American Polywater Corp./Dyna-blue, Greenlee/Cable Cream, Ideal/Clear Glide
b. Pulled FO Cable: American Polywater Corp./F Lubricant, Greenlee/Fiber Gel, Ideal/Velocity
c. Blown FO Cable: American Polywater Corp./Prelube 2000 Lubricant

N Buried Cable Signs

This work shall consist of furnishing and installing Buried Cable Signs, which shall be in accordance with the MnDOT Standard Specifications, MnDOT Standard Plan/Plates, the Plan, and the following:

The buried cable signs comply with 3973 and the following modifications/supplements:

(A) The telephone number for the sign legend (see 3973.2 A) is (651) 454-0002.

(B) The sign shall be installed on 2.1 m (7 feet) X 3.0 kg/m (2 lb/ft), galvanized, steel posts, spaced 150 m (500 ft) apart along the FO cable (trunk cables and armored pigtails) route.

The Contractor shall mark all fiber-route changes in direction (see Plan Detail) within seven days of FO cable installation.

Install the sign bottoms at 1.2 m (4 ft) above ground.

Install the signpost three feet offset from the cable trench between the cable and the Right-of-way.

Install an orange-colored plastic resin sheath to enhance the visibility of buried cable signposts. The plastic resin sheath is: Triangular in shape, having a wall thickness of 2.03 ±0.25 mm (0.08 ±0.01 inches) with a 84.07 ±0.51 mm (3.31 ±0.02 inch width of each side; Temperature stable from -40 °C (-40 ° F) to 65 °C (150 °F), UV resistant; Made of Polypropylene; Installed on the above ground portion of each post below the bottom of the sign.

Existing signs marking fiber optic cable runs abandoned by this project are to be removed by the Contractor.

HAS MET

The following items have met the above specifications:

(A) Resin Sheath: REPNET Rhino TVF48-O by REPNET Inc.

O BLANK

P Non-Metallic Conduit (PVC)

This work shall consist of furnishing and installing Non-Metallic Conduit (PVC), which shall be UL listed and in accordance with the MnDOT Standard Specifications, MnDOT Standard Plan/Plates, the Plan, and the following:

Non-metallic conduit shall be PVC Schedule 80, with the exception of conduit under roadway surfaces. Conduit under roadway surfaces shall be heavy-wall rigid PVC Schedule 80.

Standard bell ends shall be installed on all NMC ends to prevent damage to cables during installation.

80 mm (3.15 inch) wide, stretchable, orange warning tape shall be installed between 460 mm (18 inch) and 300 mm (12 inch) below the surface over all PVC bearing communication cable (including FO cable). The tape shall bare the following permanent legend: CAUTION: MnDOT CABLE BELOW.

PVC FOR BLOWN FO CABLE

The following provisions shall apply to Non-Metallic (PVC) conduit for Blown FO Cable:

(A) All conduit used for FO cable shall be placed a minimum of 0.9 m (36 inches) below the finished grade.

(B) 38 mm (1.5 inch) inside diameter, non-metallic, conduit is required for air-assisted fiber optic cable installation. The conduit is continuous flexible duct and is direct buried. Plowed duct is preferred over trenched duct.

(C) The PVC shall have the following material characteristics:

a. The PVC shall be 38 mm (1.5 inch) diameter.

b. The minimum pressure rating for the 38 mm (1.5-inch) polyethylene PVC and couplings shall be 900-kPa (130-psi).

(D) Open trench installations of PVC for Blown FO Cable shall be are backfilled with granular material to 150 mm (six inches) over the top of conduit elevation.

Q Fiber-Optic Cable Testing

This work shall consist of Fiber Optic Cable Testing, which shall be in accordance with the MnDOT Standard Specifications, MnDOT Standard Plan/Plates, the Plan, and the following:

The Contractor shall arrange a meeting with the Project Engineer and the County Contact to discuss the proposed FO Cable Testing plan. This meeting shall occur prior to any testing. Testing personnel, including the people that will be performing the field testing shall be required to attend the meeting.

The Contractor shall notify the Engineer and County Contact prior to FO system testing. The Engineer, or a representative, may observe each test. All test documentation shall be provided electronically.

The Contractor shall use an OTDR and Power Meter with current calibration certificates to perform the FO Cable testing required. Test equipment calibration information and certification documentation is submitted as part of the Project Documentation Package (with test results).

The calibration certificate shall be dated no more than one year prior to the last dates of FO cable testing.

The Contractor shall provide a test summary describing the following:

(A) Final measurements that were out of range.

(B) Approved changes in specified methods.

(C) Dates tests were performed by both Power Meter and OTDR.

(D) Other special circumstances.

Problems encountered with existing cable plant hardware shall be brought to the attention of the County Contact before testing is completed.

FO Cable Testing shall be rejected if calibration certificates are out of date.

OPTICAL TIME DOMAIN REFLECTOMETER "OTDR" TESTING

The following provisions shall apply to OTDR Testing:

(A) The OTDR shall comply with the latest revision for the Bellcore/Telcordia Document GR-196-CORE "Generic Requirements for OTDR-Type Equipment" and SR-4731 "OTDR Data Format." In addition, the OTDR performance requirements shall comply with the following:

a. The event dead zone shall be less than or equal to three meters.
b. The attenuation dead zone is less than or equal to 5 meters.
c. Has a dynamic range of 25 dB or greater.

(B) **OTDR Test files**

a. The Contractor uses MnDOT's file naming convention for test files. See FO CABLE TEST DOCUMENTATION for file naming convention example.
b. The test files must include the actual date of testing and the "Index of refraction" for the FO cable as recorded on the cable spool by the manufacturer.
c. The test files must be stored under a directory named by the highway number.

(C) Test the FO cables bi-directionally per EIA/TIA 455-59, FOTP-59, except as otherwise noted. Use a 500 m (1650 foot) patch cord as a launch cable when testing.

(D) Tests shall be made from System "A" cabinet to Williams Drive at Morgan Avenue cabinet, from System "A" cabinet to System "B" cabinet, from System "B" cabinet to System "C" cabinet and spliced pigtail to spliced pigtail. Where applicable, test each fusion splice in the forward and backward directions. Each reading (not an average) shall be recorded. All events shall be recorded.

(E) The loss through a fusion splice, when measured at wavelengths of 1550 nm for SM and 1300 nm for MM, is no more than 0.15 dB either direction; regardless of whether it recorded as a gainer (-.15 dB) or not.

POWER METER TESTING

The following provisions shall apply to Power Meter Testing:

(A) The Contractor shall use a light source and power meter conforming to EIA/TIA 455-171, FOTP-171, and OFSTP-14, except as otherwise noted, to bi-directionally test the cable plant.

(B) Power meter tests shall be made in both directions for the following scenario:

System "A" cabinet to Williams Drive at Morgan Avenue cabinet
System "A" cabinet to System "B" cabinet.
System "B" cabinet to System "C" cabinet.

(C) Measure and record each directional value for the completed SM optical link at 1550 nm. See FO Schematics Plan Sheets).

FO CABLE TEST DOCUMENTATION

The objective of FO Cable Test Documentation is to document OTDR and Power Meter test results to verify that these results meet specifications, as well as to document the link loss, FO cable distance between splices and terminations, and the fusion splice losses. The County Contact will review this documentation for approval and the following provisions shall apply to FO Cable Test Documentation:

(A) The Contractor shall provide post installation documentation on a CD.

a. The Contractor shall use the "Fiber Optic Schematic" sheets as a template for recording power meter and OTDR test data, fiber count, and fiber routing of the cable and cable run. See FIBER OPTIC SCHEMATIC EXAMPLE DETAIL located in Plan.
b. Measurements recorded on copies of FO schematics shall be stored as DGN format or DWG formatted files.
c. MnDOT will provide the plan FO schematics in these formats upon request.

(B) Measure and record the following values for all FO cables:

a. FO cable length markings at all splice and termination locations on the FO schematics.
b. FO index of refraction (usually included on FO cable spool documentation).
c. Attenuation of each FO splice in both directions.
d. Event notes for each trace. These notes shall identify each splice location and shall be consistent with each FO schematic vault location.
e. Signatures of the FO cable span and events using MnDOT file naming convention. See below in this section for file naming convention example.
f. Attenuation of each FO link, in both directions, as measured with a light source and power meter (at 1550 nm wavelength for SM or 1300 nm wavelength for MM).
g. The Contractor shall provide power meter results and splice losses on the MnDOT provided FO schematics on a Contractor provided CD.
h. Manufacturer's reel (spool) test documentation that is shipped with the FO cable spool.

(C) Naming OTDR files is done as follows:

a. The FO trunk cable ID and FO Pigtail cable ID numbers are derived from the FO Schematic plan sheets.

b. The OTDR file name is developed from left to right in the following order:

i. FO cable launch point (trunk or pigtail FO cables).
ii. North, South, East, or West (N, S, E, or W) designation shall be added after the FO Trunk ID or FO Pigtail ID; this is the direction of the optical test pulse traveling from the OTDR launch point along the majority of cable under test. This will not always be the direction the cable leaves the OTDR launch point.
iii. FO cable type (S=Single Mode) and strand count.
iv. Filename extension (data format) proceeded by a period.

<u>Fiber Optic OTDR File Naming Convention</u>

LAUNCH DIRECTION

┌------ CABLE I.D --------┐│┌ FIBER ┐┌EXT┐
C A B 6 9 4 – 50 . 47 W S 0 4 . s o r

CABLE I.D. = Trunk or pigtail FO cable I.D. number as shown on the plan schematics. Number of characters may vary.

LAUNCH DIRECTION = Direction in which the OTDR is launching (N, S, E or W). This is the direction of the optical test pulse traveling from the OTDR launch point along the majority of cable under test. This will not always be the direction the cable leaves the OTDR launch point.

FIBER = Fiber Type, (S= Single mode), (M= Multimode) and Fiber Number (example: 01...04...08...48...76...100...144). Number of characters may vary.

EXT = Telcordia universal data file format (.sor)

The OTDR file **"Fiber Notes"** field includes the State Project Number and the origin of the test launch (i.e. the complete name of the building, TMS Shelter Cabinets, cabinets, camera, or temporary termination point).

R Fiber-Optic Pigtail Termination

This work shall consist of Fiber Optic Pigtail Termination, which shall be in accordance with the MnDOT Standard Specifications, MnDOT Standard Plan/Plates, the Plan, and the following:

The FC-PC connectors for SM FO cable shall be mated with armored pigtail fibers at a facility specializing in this operation.

The Contractor shall utilize the field termination method.

INDOOR PIGTAILS

The following provisions shall apply to the Indoor Pigtails for FO Splice, Patch, or Splice/Patch Panel:

(A) Indoor Pigtails consisting of 6 individual SM fibers bundled into a single sheath are required for field splicing method of terminating Armored FO Pigtails and Trunk FO Cable within a connector.

(B) Minimum lengths shall be two meters in a Cabinets and five meters in a FDF.

(C) Complies with Corning SMF-28 for optical fiber.

(D) SM Indoor Pigtail jackets shall be yellow with yellow boots.

(E) Thickness of secondary buffer shall be 250 μm to 900 μm thickness.

(F) Individually constructed.

(G) FC-PC Fiber Connectors shall be utilized. See below for FC-PC Fiber Connector requirements.

(H) Boots shall be secured to the jacket with a pliable adhesive.

(I) Land connectors on Patch Panel Bulkhead Adaptors

FC-PC FIBER CONNECTORS

The following provisions shall apply to the FC-PC Fiber Connectors for FO Splice, Patch, or Splice/Patch Panel:

(A) Comply with "Generic Requirements for Single-mode Optical Fiber Connectors", Telcordia Document No. GR-326, issue 3, and the following additional features:

(B) Indoor pigtail fibers shall be mated to FC-PC Fiber Connectors at a facility specializing in this operation.

(C) Include the following features:

a. One-piece construction.
b. Metallic coupling nuts and bodies.
c. Zirconia ceramic ferrules.
d. Factory installed.
e. Yellow or blue boots for SM fibers when used inside Patch Panels.

HAS MET

The following items have met the above specifications:

(A) 6 Fiber FC SM Indoor Pigtails without FC Fiber Bulkhead Adaptors: APA/476-741-LLL-6-MN and Emerson/EF6FCZSM-MNDOT.

(B) 6 Fiber FC SM Indoor Pigtails with FC Fiber Bulkhead Adaptors: ADC/FL2-6PLSC605R.

(C) FC-PC SM Fiber Connectors: Molex/86053-5000, SENKO/351-103-16, and AMP/504649-3.

S Bored Conduit

This work shall consist of furnishing and installing Bored Conduit, which shall be in accordance with the MnDOT Standard Specifications, MnDOT Standard Plan/Plates, the Plan, and the following:

Bored Conduit shall conform to but not be limited to the following MnDOT Specifications except as modified by these provisions:

(A) Installation: MnDOT 2565.3.

(B) PVC: MnDOT 3803.

(C) RSC: 3801.

(D) Expansion Fittings: 3839.

For installation under an existing roadway or paved surface, Bored Conduit shall be Heavy-wall rigid PVC or HDPE Schedule 80.

Bored Conduit installed under slope paving shall be accomplished without damage to the slope paving.

Bored Conduit shall be installed 1.5 m (60 inches) below the bottom of the finished driving surface. Bored Conduit under roadway surfaces shall extend 10 feet beyond the pavement edge or curb line. A smooth transition shall be made from the routine 0.9 m (36 inches) depth of direct-buried cable to the 1.5 m (60 inches) depth under a roadway or paved shoulder.

Standard bell ends shall be installed on all conduit ends to prevent damage to cables during installation.

T Fiber Vaults

The Contractor shall furnish and install fiber vaults at the locations in the Plan, as indicated in the detail in the Plan, all to the satisfaction of the Engineer.

U Armored Fiber-Optic Pigtail

This work shall consist of furnishing and installing Armored Fiber Optic Pigtail, which shall be in accordance with the MnDOT Standard Specifications, MnDOT Standard Plan/Plates, the Plan, and the following:

Armored Fiber Optic Pigtail shall be designed for outdoor use and direct bury.

INSTALLATION REQUIREMENTS

The following provisions shall apply to the Installation Requirements for Armored Fiber Optic Pigtail:

(A) For lengths of Armored FO Pigtail over 600 feet the Contractor shall employ the Air Assisted method for installation.

(B) See GROUNDING for grounding requirements.

(C) Orange colored split conduit or FNMC shall be utilized to protect the Armored FO Pigtail that is located within a handhole. The split conduit shall be extended 50 mm (2 in) beyond the interior of the handhole wall.

(D) Expected tension on the Armored FO Pigtail and pulling tape shall be calculated prior to installing the Armored FO Pigtail in conduit runs. The pulling force shall be distributed between the inner strength member and the aramid fibers by securing both to the main pulling device.

(E) A "break-away" type pulling attachment shall be utilized to protect against over stressing the Armored FO Pigtail. A cable grip that pulls only on the outer jacket to pull Armored FO Pigtail shall not be allowed.

(F) Damage to the Armored FO Pigtail from any source or exceeding the manufacturer's recommended tensile strength limits or Armored FO Pigtail bending radius is cause for the cables to be rejected. The Contractor ensures a minimum loaded bend radius of 250 mm (10 inches) and minimum installed bend radius of 200 mm (8 inches).

(G) Often, FO cables are pulled through conduit/handhole networks. Using the 610 mm (24 inch) diameter handholes as a fiber pull box is likely to exceed the minimum loaded bend radius and cause damage to the cable fibers. The Contractor shall exercise extreme caution when using the handhole as a fiber pull box.

(H) Within a Traffic Signal Control Cabinets a SGU lead shall be bonded to the armor of the cable (approximately one meter in length) and terminated at the ground buss. Label the cable, close to its cabinet entry point, with white tape with cable name and meter mark.

(I) **Air Assisted FO Cable**

a. Long radius bends shall be utilized in equipment foundations and other situations requiring the negotiation of sharp angles.
b. The duct system shall be properly installed utilizing pressure tight splices.

    i. Seal one end of the duct and pressurize the duct utilizing a sealed blowing machine.
    ii. The duct shall maintain 897 kPa (130 psi) without realizing significant pressure loss
    iii. Use care near pressurized ducts.

c. High air speed blowing shall require the front end of the FO cable to be endcapped to prevent the cable from getting hung up in the duct.
d. Utilize proper air seals to fit the OD of the FO cable.
e. Provide proof that the duct is properly spliced and not crushed by blowing a hard mandrel through the duct.
f. Clean and dry the duct utilizing the following procedures
    i. Blow a tight fitting foam carrier through the duct at high pressure. The foam shall travel at approximately 30 mps (100 fps).
    ii. If excess water and/or dirt is expelled from the duct, repeat the process until minimal water and/or dirt is observed.
    iii. Dry the duct with airflow.
g. For high speed air machines (no missile), inject the recommended amount of approved lubricant and spread it with a foam carrier. For piston type machines, inject the majority of the lubricant in front of the missile with some placed behind the missile.
h. For push/pull machines, attach the piston to the FO cable and insert the piston into the duct.
i. For high air speed machines, hand push approximately 30 meters (100 feet) of FO cable into the duct prior to activating the machine.
j. Use caution in bringing up the air and hydraulic pressure.

<u>HAS MET</u>

Following are 6 and 12 SM Armored Fiber Optic Pigtail that have met the above specifications:

(A) General Cable, 6 SM, Part Number FC9441338.

(B) Draka Comteq, 6 SM, Part Number M-ETH031607-ES-006.

(C) Corning Cable Systems, 6 SM, Part Number 006EW5-CJ490A20.

(D) Superior Essex, 6 SM, Part Number 1A0069J02.

(E) AFL Telecommunications, 6 SM, Part Number DNL-3133-MN

SS-5.1 MEASUREMENT AND PAYMENT

Placing a Signal Communications fiber-optic cable (Armored Fiber-Optic Pigtail) between the proposed signal control cabinets of Systems "A", "B", and "C"; and between System "A" and the intersection of Williams Drive and Morgan Avenue; work includes furnishing and installing an armored 6-SM fiber-optic cable with related conduit, fittings, and fiber vaults; furnishing and installing pigtail terminations; connecting patch panels to ends of the cables in the traffic control signal cabinets and testing the cable as contained in these Special Provisions and in the Plan will be measured as an integral unit and paid for as specified in MnDOT 2565.4 and MnDOT 2565.5 respectively for Item No. 2565.601 (TRAFFIC CONTROL INTERCONNECTION), at the contract price per LUMP SUM, which price shall be compensation in full for all costs incidental thereto.

SS-6 (2565) REVISE SIGNAL SYSTEM

This work shall consist of removing items of an existing traffic control signal system; furnishing and installing materials and electrical equipment as specified herein, all to provide a complete operating revised signal system at the intersection of Williams Drive and Morgan Avenue in Burnsville, Dakota County, in accordance with the applicable provisions of MnDot 2565; with the current edition of the National Electrical Code; with the Plan; and as follows:

SS-6.1 GENERAL

A. The Contractor shall ensure that the existing traffic control signal system is kept in operation at all times in accordance with the provisions of MnDot 2565.3B.

During any periods of authorized work suspension, the Department will provide and maintain the existing traffic signal cabinet and control equipment and will maintain the existing traffic control signal system.

B. The Contractor shall revise the existing traffic control signal system in accordance with the Plan and with the following to provide a complete operating revised signal system:

1. Remove and dispose of items of the existing traffic control signal system not being reused in the revised signal system as required by the Plan and these Special Provisions.

2. Incorporate into the revised signal system all in place items of the existing traffic control signal system as indicated in the Plan.

3. Furnish and install new items as required by the Plan (which includes, but not limited to: traffic signal electrical cables and conductors; PVC loop detectors; Schedule 80 PVC or HDPE conduit; handholes or handhole adjustment rings etc.).

4. Furnish and install new labels to identify cables and conductors as required by the field wiring diagram; and terminate all cables and conductors as required to provide an operational revised signal system to the satisfaction of the Engineer.

C. **THE CONTRACTOR SHALL PROVIDE SHOP DETAIL DRAWINGS FOR MATERIALS AND ELECTRICAL EQUIPMENT <u>AS SPECIFIED IN THE CONTRACT DOCUMENTS</u>.**

D. **Gopher State One Call**

The Contractor must adhere to all requirements of Gopher State One Call including the following:

The Contractor is responsible for marking any proposed excavation area by utilizing white markings. The white markings must delineate the **<u>actual</u> excavation area** where the locating of underground facilities is required.

E. **Placed Orders For Materials**

WITHIN 15 DAYS AFTER THE CONTRACT APPROVAL NOTICE MAILING DATE, THE CONTRACTOR SHALL FURNISH EVIDENCE TO THE ENGINEER, IN WRITING, THAT ORDERS HAVE BEEN PLACED FOR ALL SIGNAL SYSTEM COMPONENTS REQUIRED ON THE PROJECT.

F. The City of Burnsville has assigned a contact for the placement and installation of loops for the Revised Signal System. He is Ryan Peterson, City Engineer, and can be reached at 100 Civic Center Parkway, Burnsville, MN 55337. Phone No. 952.895.4459. Fax No. 952. 895.4404. E-mail: www.burnsville.org

SS-6.2 MATERIALS

A. Electrical Cables and Conductors for Traffic Signal Systems

All electrical cables and conductors for traffic signal systems shall be in accordance with the applicable provisions of MnDot 3815, and as specified herein.

1. The following cables is not required to be listed by a Nationally Recognized Testing Laboratory (NRTL):

   2/c #14 (Loop Detector Lead-in Cable)

2. Loop Detector Lead In Cable

   Shall be in accordance with 3815.2C4(b)

B. Loop Detector Splices

The Contractor shall furnish and install qualified loop detector splice encapsulation kits.

MnDot approved Splice Encapsulation Kits are listed on the MnDot Approved/Qualified Products Lists WEB site for Signals:

http://www.dot.state.mn.us/products/index.html

THE CONTRACTOR SHALL INSTALL LOOP DETECTOR SPLICES ACCORDING TO THE MANUFACTURER'S INSTRUCTIONS AND AS SPECIFIED ELSE WHERE IN THESE SPECIAL PROVISIONS.

SS-6.3 CONSTRUCTION REQUIREMENTS

A. Preformed Rigid PVC Conduit Loop Detector Installation

The Contractor shall install loop detectors in rigid PVC conduit in accordance with Standard Plate 8132; as marked by the Engineer; and with the applicable provisions of MnDot 2565.3G.

B. Adjust Hand-holes

At the locations indicated in the Plan, the Contractor shall adjust each hand-hole to an elevation as indicated in the Plan to the satisfaction of the Engineer.

If any hand-hole or hand-hole cover to be adjusted is damaged by the Contractor's operation, then the Contractor shall furnish and install a new identical hand-hole or hand-hole cover at his/her own expense. If the Engineer determines that a hand-hole or hand-hole cover to be adjusted is unusable due to circumstances beyond the Contractors' control, then a new identical hand-hole or hand-hole cover shall be furnished and installed by the Contractor and will be paid for as **EXTRA WORK**.

All required new hand-holes or hand-hole covers shall be MnDot approved Hand-holes and Hand-hole Covers listed on the MnDot Approved/Qualified Products Lists WEB site for Signals:

http://www.dot.state.mn.us/products/index.html

Adjusting hand-holes at the locations where indicated in the Plan will each be measured as an integral unit complete in place and will be incidental to Pay Item No. 2565.616 (REVISE SIGNAL SYSTEM).

THIS ITEM INCLUDES THE FOLLOWING:

1. Adjusting hand-hole to the elevation of the new surface to the satisfaction of the Engineer.
2. If required, furnishing and installing new hand-hole(s) and cover(s) to the satisfaction of the Engineer.
3. Excavation and backfill.
4. Restoration as directed by the Engineer.

C. "As Built Plan"

The Contractor shall furnish five (5) copies of an "As Built Plan" that contain any **changes** in the following:

--- conduit sizes
--- conduit runs
--- number of hand-holes
--- hand-hole locations
--- wiring
--- size of detection
--- type of detection
--- cable path
--- other items as required by the Engineer

Any discrepancy or additions between the final Plan and how the signal was actually built **must be indicated** on the "as built plan".

The "as built Plan" shall be in a form that is satisfactory to the Engineer.

The five (5) copies shall be distributed by the Engineer as follows:

1. MnDot Metro Electrical Services Maintenance Unit.
2. MnDot Metropolitan District Traffic Signal Operations Engineer.
3. MnDot Metropolitan District Traffic Signal and Lighting Design Engineer.
4. City of Burnsville.
5. County of Dakota.

D. Activating Signals

MnDot Specification 2565.3W is hereby deleted and replaced with the following:

When the traffic control signal system is to be placed in operation, the Contractor shall notify the Engineer at least 48 hours in advance of the scheduled traffic signal turn-on.

The traffic control signal system will be turned on by County personnel, unless otherwise authorized by the Engineer. The Contractor shall be present at time of turn on to provide assistance to ensure the traffic control signal system is operating correctly and in a safe manner. The Contractor shall provide all necessary parts and labor to rectify any malfunctioning components of the traffic control signal system installed by the Contractor. All components of the signal system, including the emergency vehicle preemption (EVP) and the traffic control interconnection, must be completely operational to the satisfaction of the Engineer before the actual signal system turn on is performed.

The Contractor shall not turn the signal system ON or OFF, or place in flashing mode of operation, without the specific approval of, and in the presence of the Engineer.

E. Removals

When directed by the Engineer, the Contractor shall remove and salvage, or dispose of all items of the existing traffic control signal system in accordance with the applicable provisions of MnDOT 2565.3U; the applicable provisions of MnDOT 2104; and the following:

1. All underground conduit, except under roadway surfaces, shall be removed and disposed of as specified herein. Conduit under roadway surfaces may be abandoned in place, unless otherwise directed by the Engineer to be removed.

2. All resulting excavation shall be backfilled and the backfilling and compaction shall be like in kind to approximately the same density as the adjoining ground. Any roadway surfacing (concrete pavement, bituminous surface, or gravel surface, including underlying base courses), sidewalks, curb and gutters, sod, etc., removed by the construction operations shall be replaced in kind by the Contractor, all at his/her own expense.

All removals of materials of the existing signal system and salvaging as required, the disposal of non-salvageable materials, and backfilling, all in accordance with the foregoing, shall be included in the Pay Item No. Item No. 2565.616 (REVISE SIGNAL SYSTEM).

SS-6.4 MEASUREMENT AND PAYMENT

Removing items of an existing traffic control signal system; furnishing and installing materials and electrical equipment as specified herein, all to provide a complete operating revised signal system at the intersection of Williams Drive and Morgan Avenue in Burnsville, Dakota County, as contained in these Special Provisions and in the Plan will be measured as an integral unit complete in place and operating and will be paid for under Item No. 2565.616 (REVISE SIGNAL SYSTEM) at the Contract price per SYSTEM, which price shall be compensation in full for all costs incidental thereto.

(This Space Intentionally Left Blank)

SUBMITTAL HAS MET CHECK-OFF LIST

Product Manufacturer	Material Description	Special Provisions Section	"Has Met" Part Number *(No Data Sheet required if "has met" listed here)*	Data Sheet Provided (✓)
	Armored FO Pigtail Cable	SS-5.S		
	Indoor FO Pigtails	SS-5.P		
	FO Cable Connectors	SS-5.P		
	Cable Pulling Lubricant	SS-5.M		
	Oxide Inhibitor	SS-5.H		
	Buried Cable Sign Plastic-Resin Sheath	SS-5.N		

(This Space Intentionally Left Blank)

Woven Wire Cloth #1

(This Space Intentionally Left Blank)

Woven Wire Cloth # 2

(This Space Intentionally Left Blank)

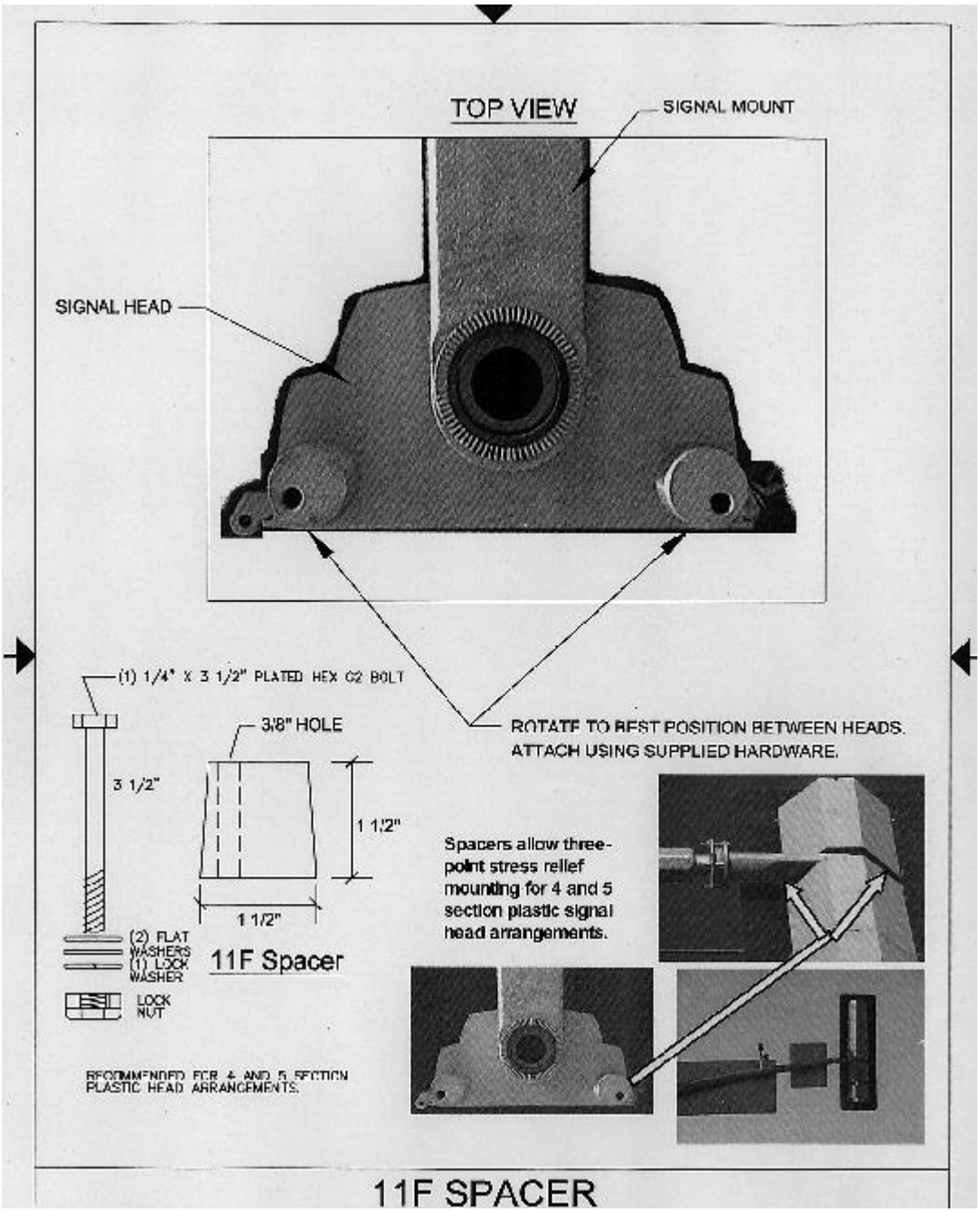
TOP VIEW
SIGNAL MOUNT
SIGNAL HEAD
(1) 1/4" X 3 1/2" PLATED HEX G2 BOLT
3/8" HOLE
3 1/2"
1 1/2"
1 1/2"
(2) FLAT WASHERS
(1) LOCK WASHER
LOCK NUT
11F Spacer
ROTATE TO BEST POSITION BETWEEN HEADS.
ATTACH USING SUPPLIED HARDWARE.
Spacers allow three-point stress relief mounting for 4 and 5 section plastic signal head arrangements.
RECOMMENDED FOR 4 AND 5 SECTION PLASTIC HEAD ARRANGEMENTS.
11F SPACER

The following is a picture of the individual EVP components:

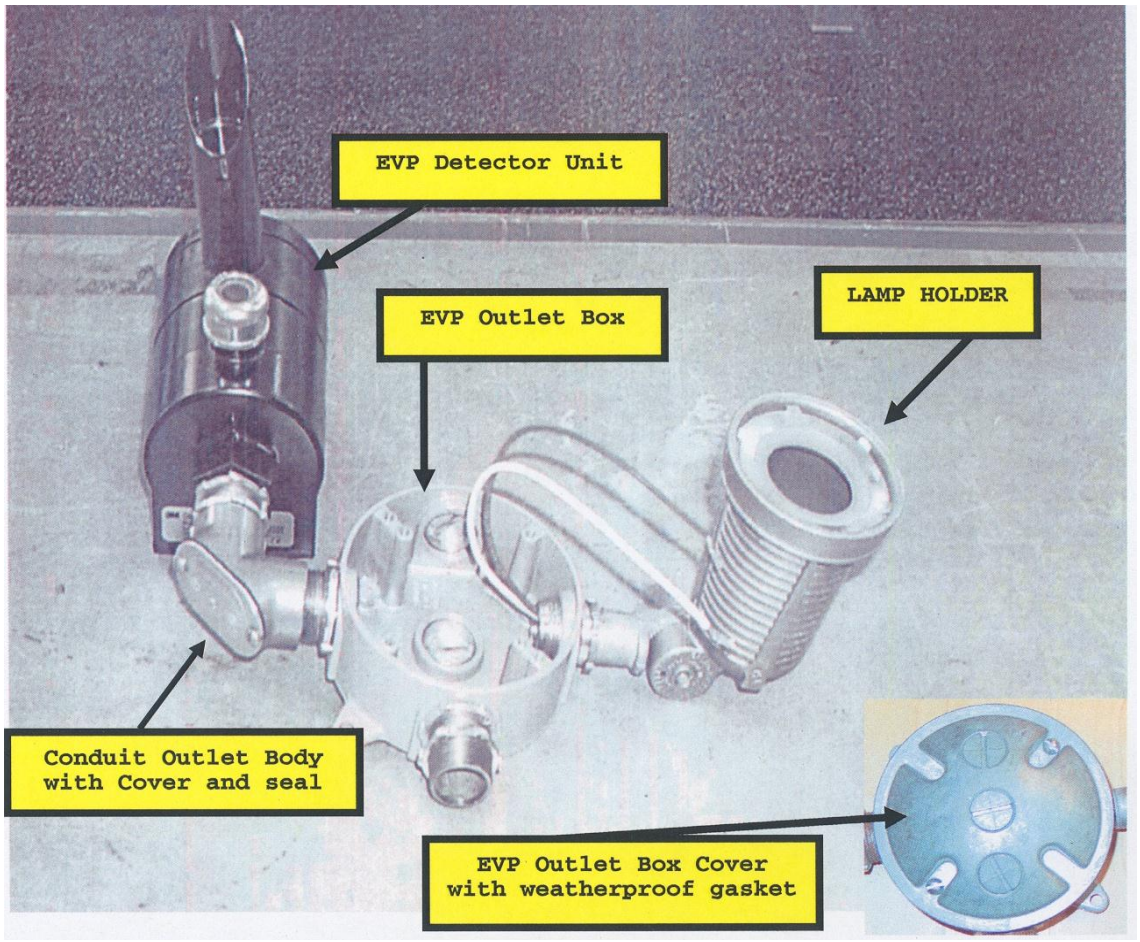

(This Space Intentionally Left Blank)

Contractor Certification of Disposal

Project No.:_____ **Location**: _____

We, _____, hereby certify that the mast arm pole standards
(Name of Contractor)
were rendered unusable, and the mast arm pole standards, and if applicable, pedestal shafts and bases were removed, transported, and disposed of in accordance with all requirements of the Minnesota Pollution Control Agency (MPCA) and the Occupational Safety & Health Administration (OSHA) for the removal, transporting, and disposal of hazardous waste.

_____ _____
SIGNATURE **DATE**

After signed and dated, the Contractor shall submit this form to the Mn/DOT project Engineer.
The Contractor shall also submit to the Engineer a copy of the "Tipping Receipt" that the Contractor receives from the scrap yard or recycler.

(This Space Intentionally Left Blank)

Electric Service Information Form For Traffic Signal Systems

Project Number: Contractor:

Date:

MN/DOT Signal System ID	Intersection	Meter Address	Electric Utility Transformer Size In KVA	Length of conductors in feet from transformer connection to meter socket connection.		
				L1 =	L2 =	Neutral =
				L1 =	L2 =	Neutral =
				L1 =	L2 =	Neutral =
				L1 =	L2 =	Neutral =
				L1 =	L2 =	Neutral =
				L1 =	L2 =	Neutral =

Accessible Pedestrian System (APS)
ORDER FORM

Traffic Control Signal System A
Intersection: CSAH 5 (Kenwood Trail) @ Williams Dr/Greenwood Dr
System Id # 39429, TE # 5609

Total Qty of Pedestrian Push Buttons___8_____

Control Board: One needed for each intersection **Qty____1_____**

CCU: (Central Control Unit) One needed for each intersection **Qty____1_____**

Push Button and Sign Braille Information

Button	Arrow Direction R/L		Street Name
PB2-1	**L**	PB2-1	**Greenwood**
PB2-2	**R**	PB2-2	**Greenwood**
PB4-1	**L**	PB4-1	**Kenwood**
PB4-2	**R**	PB4-2	**Kenwood**
PB 6-1	**L**	PB6-1	**Williams**
PB 6-2	**R**	PB6-2	**Williams**
PB 8-1	**L**	PB8-1	**Kenwood**
PB 8-2	**R**	PB8-2	**Kenwood**

Custom Voice Message Details

Voice on Location and Walk Message(s) Please give phonetic pronunciation on difficult street names so that the message will be recorded correctly.
*Note that unless Street, Drive, Avenue etc…are absolutely necessary for intersection identification, it is recommended to not include them in the verbal message.

PB2-1

Wait Message:

Wait to Cross | **Greenwood** (Street Being Crossed) | **at** | **Kenwood** (Intersecting Street)

Walk Message:

Greenwood (Street Being Crossed) | **Walk sign is on to cross** | **Greenwood** (Street Being Crossed)

PB2-2

Wait Message:

Wait to Cross | **Greenwood** (Street Being Crossed) | **at** | **Kenwood** (Intersecting Street)

Walk Message:

Greenwood (Street Being Crossed) | **Walk sign is on to cross** | **Greenwood** (Street Being Crossed)

PB4-1

Wait Message:

Wait to Cross | **Kenwood** (Street Being Crossed) | **at** | **Williams** (Intersecting Street)

Walk Message:

Kenwood (Street Being Crossed) | **Walk sign is on to cross** | **Kenwood** (Street Being Crossed)

PB4-2

Wait Message:

Wait to Cross | **Kenwood** (Street Being Crossed) | **at** | **Greenwood** (Intersecting Street)

Walk Message:

Kenwood (Street Being Crossed) | **Walk sign is on to cross** | **Kenwood** (Street Being Crossed)

PB6-1

Wait Message:

Wait to Cross | **Williams** (Street Being Crossed) | **at** | **Kenwood** (Intersecting Street)

Walk Message:

Williams (Street Being Crossed) | **Walk sign is on to cross** | **Williams** (Street Being Crossed)

PB6-2

Wait Message:

Wait to Cross | **Williams** (Street Being Crossed) | **at** | **Kenwood** (Intersecting Street)

Walk Message:

Williams (Street Being Crossed) | **Walk sign is on to cross** | **Williams** (Street Being Crossed)

PB8-1

Wait Message:

Wait to Cross | **Kenwood** (Street Being Crossed) | **at** | **Greenwood** (Intersecting Street)

Walk Message:

Kenwood (Street Being Crossed) | **Walk sign is on to cross** | **Kenwood** (Street Being Crossed)

PB8-2

Wait Message:

Wait to Cross | **Kenwood** (Street Being Crossed) | **at** | **Williams** (Intersecting Street)

Walk Message:

Kenwood (Street Being Crossed) | **Walk sign is on to cross** | **Kenwood** (Street Being Crossed)

Accessible Pedestrian System (APS)
ORDER FORM

Traffic Control Signal System B
Intersection: TH 13 @ CSAH 5 (Kenwood Trail) South Ramp
System Id # 39428, TE # 5608

Total Qty. of Pedestrian Push Buttons 2

Control Board: One needed for each intersection **Qty** 1

CCU: (Central Control Unit) One needed for each intersection **Qty** 1

Push Button and Sign Braille Information

Button	Arrow Direction R/L		Street Name
PB2-1	**L**	PB2-1	**Highway 13 Ramp**
PB2-2	**R**	PB2-2	**Highway 13 Ramp**

Custom Voice Message Details

Voice on Location and Walk Message(s) Please give phonetic pronunciation on difficult street names so that the message will be recorded correctly.

*Note that unless Street, Drive, Avenue etc…are absolutely necessary for intersection identification, it is recommended to not include them in the verbal message.

PB2-1

Wait Message:

Wait to Cross **Highway 13 Ramp** (Street Being Crossed) **at** **Kenwood** (Intersecting Street)

Walk Message:

Highway 13 Ramp (Street Being Crossed) **Walk sign is on to cross** **Highway 13 Ramp** (Street Being Crossed)

PB2-2

Wait Message:

Wait to Cross **Highway 13 Ramp** (Street Being Crossed) **at** **Kenwood** (Intersecting Street)

Walk Message:

Highway 13 Ramp (Street Being Crossed) **Walk sign is on to cross** **Highway 13 Ramp** (Street Being Crossed)

Accessible Pedestrian System (APS)
ORDER FORM
(Fill out one form per intersection)

Traffic Control Signal System C
Intersection: TH 13 @ CSAH 5 (Kenwood Trail) North Ramp
System Id # 39427, TE # 5607

Total Qty. of Pedestrian Push Buttons **2**

Control Board: One needed for each intersection **Qty** **1**

CCU: (Central Control Unit) One needed for each intersection **Qty** **1**

Push Button and Sign Braille Information

Button	Arrow Direction R/L	Button	Street Name
PB2-1	**L**	PB2-1	**Highway 13 Ramp**
PB2-2	**R**	PB2-2	**Highway 13 Ramp**

Custom Voice Message Details

Voice on Location and Walk Message(s) Please give phonetic pronunciation on difficult street names so that the message will be recorded correctly.
*Note that unless Street, Drive, Avenue etc…are absolutely necessary for intersection identification, it is recommended to not include them in the verbal message.

PB2-1

Wait Message:

Wait to Cross | **Highway 13 Ramp** (Street Being Crossed) | **at** | **Kenwood** (Intersecting Street)

Walk Message:

Highway 13 Ramp (Street Being Crossed) | **Walk sign is on to cross** | **Highway 13 Ramp** (Street Being Crossed)

PB2-2

Wait Message:

Wait to Cross | **Highway 13 Ramp** (Street Being Crossed) | **at** | **Kenwood** (Intersecting Street)

Walk Message:

Highway 13 Ramp (Street Being Crossed) | **Walk sign is on to cross** | **Highway 13 Ramp** (Street Being Crossed)

DIVISION ST

Section No.	Item	Page No.
ST-1	(2104) REMOVING MISCELLANEOUS STRUCTURES	1-ST
ST-2	(2564) TRAFFIC SIGNS AND DEVICES	1-ST

I hereby certify that the Special Provisions for traffic sign construction (Division ST) contained in this proposal were prepared by me or under my direct supervision and that I am a duly licensed Professional Engineer under the laws of the State of Minnesota.

Tiffany Kautz

Tiffany Kautz

Lic. No. 45918 Date 6/6/12

DIVISION ST

ST-1 (2104) REMOVING MISCELLANEOUS STRUCTURES

This work shall consist of removing or salvaging miscellaneous structures in accordance with the provisions of Mn/DOT 2104 and the following:

ST-1.1 CONSTRUCTION REQUIREMENTS

The Contractor shall give 14 calendar days advance notice to Gary Nyberg, Metro Transit, at 612-349-7303 to have him arrange to remove the Dynamic Nicollet Ave Park & Ride sign designated in the Plan as "SALVAGE BY OTHERS".

A Remove Sign Type A

For sign A-101, the Contractor shall completely remove the concrete footings or H-pile footings.

B Salvage Sign Type C

The Contractor shall inform the Engineer or his representative of any damaged in place sign panel prior to salvaging so a deduction will not be made.

When salvaging a sign panel, the Contractor shall remove the nuts, bolts and washers in such a manner so as not to damage the sign panel, and dispose of the sign structure and nuts, bolts and washers. If the Contractor damages any sign panel, he shall dispose of the damaged, and fabricate a new, sign panel in accordance with Mn/DOT 2564.2F and Section ST-2 of these Special Provisions, at no cost to the Department or Dakota County.

The salvaged sign panels, which will be installed under Install Sign Type __, should be stored in a manner to prevent damage to the aluminum sign panels and the sign sheeting materials. The Contractor shall NOT:

Store sign panels laying on the ground
Allow reflective surfaces to come in contact with dirt, water and grass
Store sign panels covered with plastic or a tarp

ST-1.2 METHOD OF MEASUREMENT AND BASIS OF PAYMENT

Payment for Item No. 2104.509 (REMOVE SIGN TYPE A) at the contract price per EACH shall be compensation in full for all work, material and costs involved in performing the work as specified above and in the Plan.

Payment for Item No. 2104.523 (SALVAGE SIGN TYPE C) at the contract price per EACH shall be compensation in full for all work, material and costs involved in performing the work as specified above and in the Plan.

ST-2 (2564) TRAFFIC SIGNS AND DEVICES

Traffic signs shall be constructed in accordance with the provisions of Mn/DOT 2564, except as modified below:

ST-2.1 MATERIALS

Sign Face and Sign Legend Materials

All signs, markers and delineators, including the numerals on M1-5A Route Markers and M1-5B Type Overlays, shall be fabricated with either Sign Sheeting for Rigid Permanent Signs, Delineators and Markers (Type IX or Type XI), except as specified below:

Sign face material for certain warning signs specified in Mn/DOT 2564.2F3 shall be fluorescent yellow green reflective sheeting.

Sign face material for all other warning signs, yellow markers, yellow delineators, E11-X1 sign panels Type Overlay and the yellow background on Type A and Type OH sign panels shall be fluorescent yellow reflective sheeting, except for the following:

Sign face material for yellow Delineators Type Cylinder Style shall be flexible ASTM Type III MD retroreflective sheeting.

Sign face material for sign panels with brown background shall be white reflective sheeting. Sign legend material for these sign panels shall be brown electronic cuttable (EC) film in accordance with Mn/DOT 2564.2F4. Before applying the brown EC film to the sign face material, the Contractor shall:

Cut and weed out all legend and border (specified on the sign panel detail[s]) in the Plan) from the brown EC film – do NOT cut and weed out the brown EC film that will be covered by Sign Panels Type Overlay (route markers, etc.).

Apply the weeded brown EC film to the sign face material (white reflective sheeting).

Apply the brown EC film "corner" pieces that are located outside the border that fill in the square corners of the sign panel.

Sign face material for the M1-5A Route Marker and the M1-5B Type Overlay shall be as specified in Mn/DOT 2564.2F3.

Sign face material for X4-2 Hazard Markers shall be non-reflectorized black.

Sign face material for white Delineators Type Cylinder Style shall be ASTM Type V or ASTM Type VII MD reflective sheeting.

Sign legend material for colors other than black may be screened in accordance with Mn/DOT 3352.2A5c.

Sign legend material for black legend shall be in accordance with Mn/DOT 3352.2A5c or Mn/DOT 3352.2A5d.

Sign legend material for Hazard Marker X4-2 shall be fluorescent yellow reflective sheeting.

The retroreflective sheeting types and qualified products used for rigid permanent signs, markers and delineators can be found at: http://www.dot.state.mn.us/products/index.html.

ST-2.2 CONSTRUCTION REQUIREMENTS

The Contractor shall install Department furnished warning stickers on new Type C and D sign panels in accordance with Mn/DOT 2564.3H. The Contractor shall give 30 days advance notice to Jeff Streeter at 651-366-5191 prior to picking up the Department furnished warning stickers.

The Contractor shall notify Gary Nyberg, Metro Transit, at 612-349-7303 to have him arrange to install the Dynamic Nicollet Ave Park & Ride sign designated in the Plans as "INSTALLED BY OTHERS".

Replace Paragraphs 6 and 7 of 2564.3E with the following:

The threads of anchor rods and nuts shall be lubricated with an anti-seize material. All leveling nuts and top nuts shall be brought to a snug-tight condition against the post base plate. Nuts shall be determined to be snug-tight when no shifting of top or bottom washers occurs when they are struck with an inspection hammer. After all nuts are snug-tight, the top nuts shall be additionally tightened $1/12^{th}$ turn (one-half of a flat). Contractor shall mar anchor rod threads at top of top nuts after tightening is complete, per Mn/DOT Specification 2402.3H.

For Sign Panels Type OH:

The sign face material shall be Sign Sheeting for Rigid Permanent Signs, Delineators and Markers (Type IX or Type XI), except the sign face material for the yellow background on Type A and Type OH sign panels and E11-X1 sign panels Type Overlay shall be fluorescent yellow reflective sheeting.

The sign legend material shall be Sign Sheeting for Rigid Permanent Signs, Delineators and Markers (Type IX or Type XI), except where black legend is specified the sign legend material shall be in accordance with Mn/DOT 3352.2A5c or 3352.2A5d.

For each new reference post marker attached to a new Type C sign structure, the Contractor shall attach the marker, at the mounting height designated in the Plan, to the left sign post with new mounting hardware detailed in the Plan.

ST-2.3 POST AWARD DATA

SignCAD Millennium (Program Version 8.24) panel layout files for panel layouts shown in the plan are available electronically upon project award. To request these files, please contact Tiffany Kautz at tiffany.kautz@state.mn.us or 651/234-7822.

Mn/DOT believes the electronic data it will provide is accurate, but MnDOT provides no guarantee or warranty, express or implied, concerning the accuracy of the data and the Contractor shall not act in reliance on the data without verifying the data against the contract documents. The documents originally provided with the Contract remain the basis of the Contract, and the electronic data that will be provided at the Request of the Contractor is provided only for the convenience of the Contractor. Therefore, if use of this data causes an error, omission, unacceptable work, or work not in conformance with the contract documents, then any costs to the Contractor to make corrections as a result of this error will not be considered "extra work", and the Contractor will not be entitled to an adjustment of contract time.

ST-2.4 AS-BUILT SIGNING DATA

The Contractor shall submit to MnDOT an electronic data table that contains GPS coordinates and sign attribute data for all new signs and signs that change location.

The Contractor shall contact Rich Frick at 651/775-0316 or richard.frick@state.mn.us 15 working days prior to field collection to obtain tables containing attribute and plan spreadsheet data. The Contractor shall provide the electronic data table in standard geospatial vector data format. The format must be accepted by Mn/DOT prior to commencement of field work.

The GPS receiver and geospatial data collected shall:

Be accurate to less than one meter.

Use a minimum of 5 satellites

Use UTM15N or WGS84 coordinate systems.

One GPS coordinate shall be collected per sign support structure (post, beam, signal mast arm, signal post, guardrail end treatment, wall mount, cantilever, sign bridge, etc.)

If the support consists of a sign post(s), beam(s), or guardrail end treatment, coordinate shall be collected at the center of the support.

If the sign is located on a signal mast arm or signal post, the GPS coordinate shall be the signal post.

If the sign is located on a cantilever or sign bridge, the GPS coordinate shall be the support pole located exterior to the roadway.

The Contractor shall define the following support structure data:

Route – MnDOT route where the sign is located.
Travel Direction – Cardinal direction of the roadway

Type – Support Type
Material – The physical properties/description of which the support is made.
Mounting Kit - Means of attaching or mounting a sign panel or support.

The Contractor shall associate each sign panel to a support and define the following attributes:
Code – Specify MUTCD code or if the panel is a uniquely designed sign, use the panel number as specified on plan sheet (i.e. D-101 or OH100-001).
Size – width x height (inches).
Facing Direction – Direction the sign panel is facing.

Data that does not meet the above criteria may be rejected and the Contractor would be responsible to repeat the data collection. No direct payment will be made for this work.

ST-2.5 METHOD OF MEASUREMENT AND BASIS OF PAYMENT

Payment for Item No. 2564.522 (STRUCTURAL STEEL -- __) at the contract price per POUND shall be compensation in full for all work, materials and costs involved in performing the work as specified above and in the Plan.

Payment for Item No. 2564.531 (SIGN PANELS TYPE _) at the contract price per SQUARE FOOT shall be compensation in full for all work, materials and costs involved in performing the work as specified above and in the Plan.

Payment for Item No. 2564.550 DELINEATOR TYPE X4-6), Item No. 2564.551 (REFERENCE POST MARKER), and Item No. 2564.552 (HAZARD MARKER X4-2) at the contract price per EACH shall be compensation in full for all work, materials and costs involved in performing the work as specified above and in the plan.

Office of Traffic and Maintenance Operations

I hereby certify that Special Provisions for the Traffic Management System (Division SZ), contained in this proposal were prepared by me or under my direct supervision and that I am a duly licensed professional engineer under the laws of the State of Minnesota.

Geoffrey M. Prelgo

License # 26530 Date: 6/18/12

Section No.	Item	page No.
	DIVISION SZ	
SZ-1	(1101) ABBREVIATIONS	1
SZ-2	(1103) DEFINITIONS	2
SZ-3	(1903) COMPENSATION FOR INCREASED OR DECREASED QUANTITIES	3
SZ-4	(2011) GPS ASBUILT	3
SZ-5	(2104) SALVAGE FIBER OPTIC VAULT	4
SZ-6	(2104) SALVAGE SERVICE CABINET	5
SZ-7	(2104) SALVAGE DMS	5
SZ-8	(2104) SALVAGE CABINET	6
SZ-9	(2104) REMOVE CABLES	6
SZ-10	(2550) MATERIALS	7
SZ-11	Mn/DOT FURNISHED MATERIALS	7
SZ-12	TMS INTEGRATION	8
SZ-13	GROUNDING	8
SZ-14	LABELING	11
SZ-15	ELECTRICAL SERVICE	13
SZ-16	JOB SPECIFIC SPECIFICATION CONSIDERATIONS	15
SZ-17	PROJECT TESTING AND DOCUMENTATION	15
SZ-18	INDUSTRY ACCEPTED LUBRICANTS FOR ALL CABLES	18
SZ-19	INSPECTION AND CLEANING EXISTING CONDUIT SYSTEMS	19
SZ-20	FO CABLE REPAIR OR REPLACEMENT	19
SZ-21	ELECTRIC AND ELECTRONIC CABLE REPAIR OR REPLACEMENT	20
SZ-22	ELECTRIC AND ELECTRONIC CABLE	21
SZ-23	(2550) FOUNDATIONS	22
SZ-24	(2550) HANDHOLES	23
SZ-25	(2550) FIBEROPTIC SPLICE VAULT	24
SZ-26	(2550) OUTDOOR FIBER SPLICE ENCLOSURE	25
SZ-27	(2550) BURIED CABLE SIGN	27
SZ-28	(2550) NON-METALLIC CONDUIT	27
SZ-29	(2550) POWER AND CONTROL CABLES	28
SZ-30	(2550) TELEPHONE/COMMUNICATION/VIDEO CABLE	29
SZ-31	(2550) INSTALL CABINET	30
SZ-32	(2550) TEMPORARY COMMUNICATION SYSTEM	31
SZ-33	(2550) FIBER OPTIC CABLE TESTING	32

SZ-34 (2550) FIBER OPTIC PIGTAIL TERMINATION 35
SZ-35 (2550) FIBER OPTIC CABLE SPLICING 36
SZ-36 (2550) INSTALL DMS, POST MOUNTED 38
SZ-37 (2550) INSTALL FIBER OPTIC VAULT 39
SZ-38 (2550) REROUTE CABLE 39
SZ-39 (2550) BORED CONDUIT 41
SZ-40 (2550) FIBER OPTIC CABLE 42

DIVISION SZ

SZ-1 (1101) ABBREVIATIONS

The provisions of Mn/DOT 1101 are hereby supplemented with the following:

SZ-1.1 The following is added to Mn/DOT 1101.1 GLOSSARY OF ABBREVIATIONS:

APL	Approved Product List
ABS	Acrylonitrile Butadiene Styrene
CPVC	Chlorinated Polyvinyl Chloride
DC	Direct Current
EIA	Electronic Industries Alliance
FDF	Fiber Distribution Frame
FNMC	Flexible Non-Metallic Conduit
FO	Fiber Optic
FOTP	Fiber Optic Test Procedure
HDPE	High Density Polyethylene
HOV	High Occupancy Vehicle
JB	Junction Box
KA	Kilo Amperes
LCS	Lane Control Signal
LLDPE	Linear Low Density Polyethylene
LED	Light Emitting Diode
MDPE	Medium Density Polyethylene
MIL	Military
MM	Multimode
NRTL	Nationally Recognized Testing Laboratory
OTDR	Optical Time Domain Reflectometer
OFSTP	Optical Fiber System Test Procedure
PE	Polyethylene
PTZ	Pan, Tilt, Zoom
RCS	Ramp Control Signal
SGU	Sheath Grounding Unit
SM	Single Mode
SNR	Signal to Noise Ratio
SS	Stainless Steel
STP	Shielded Twisted Pair
TIA	Telecommunications Industries Association
TWP	Twisted Wire Pair
XLP	Crosslinked Polyethylene
V	Volt
ZDW	Zero Dispersion Wavelength

SZ-1.2 UNITS

°F	Degree Fahrenheit

SZ-1.3 SYMBOLS

π	pi (3.1416)
<	less than
>	greater than

SZ-1.4 CONVERSIONS

1 inch	25.4 millimeters (mm)
1 $inch^2$	645 mm^2
1 $inch^3$	16,400 mm^3
1 yd3	0.76 m^3
1 liter	61 in^3
1gallon	3.785 liters
1 pound mass	0.4536 kg

SZ-2 (1103) DEFINITIONS

The provisions of Mn/DOT 1103 are hereby supplemented with the following:

AS BUILT PLANS
Copies of the original Plan and Plan Detail sheets with changes and additions to the Contract marked in the color red.

SPECIFICATIONS
Detailed descriptions of a device or devices including physical and operating characteristics.

SUBMITTAL
Documentation of proposed, materials, products, equipment or processes. Additionally, it shall include shop drawings, wiring diagrams, and test reports

SCHEMATICS
Diagrams using standard symbols to show the function.

HAS MET
A Manufacturer's product that is in conformance with the specifications required in these Special Provisions. The Contractor may submit any other Manufacturer's product of equal quality for approval.

APL
Mn/DOT's Approved Product List which contains Manufacturer's products that are in conformance with the specifications required by Mn/DOT. The Contractor shall only use products contained within the Traffic Management Systems/ ITS section of the APL unless otherwise directed within these Special Provisions. The Contractor may submit any other Manufacturer's product of equal quality for approval. See the following website for the APL:

http://www.dot.state.mn.us/products/index.html

NETWORK CONNECTION POINT (NCP)
An Armored FO pigtail shall connect to the RTMC network Trunk FO Cable. The NCP shall be the point at which the Armored FO Pigtail Cable Indoor pigtails are attached to the 12 Fiber Bulkhead Drawers. The Signal cabinet that contains this termination shall be called the Head-end Cabinet.

HEAD-END CABINET (HC)
This Signal cabinet contains the NCP.

SZ-3 (1903) COMPENSATION FOR INCREASED OR DECREASED QUANTITIES

Quantities shown in the Plan are estimates only. Increases or decreases in final quantities shall not be grounds for unit bid price adjustment requests. Quantities requested for work not covered by unit bid prices shall be paid for as Extra Work in accordance with Mn/DOT 1904.

SZ-3.1 Mn/DOT1903 is modified to the extent that any references to 75 percent shall be construed to read 60 percent and any references to 125 percent shall be construed to read 150 percent for the following items:

2550.516	BURIED CABLE SIGN
2550.603	_____ " BORED CONDUIT

SZ-4 (2011) GPS ASBUILT

This work shall consist of providing Mn/DOT with Global Positioning System (GPS) collected x and y coordinates on all the proposed ITS components and on existing ITS components where proposed components connect to them in accordance with the Mn/DOT Standard Specifications, Mn/DOT Standard Plans/Plates, the Plans, and the following:

SZ-4.1 **DATA COLLECTION**

The following provisions shall apply to the Data Collection Requirements for GPS Asbuilt:

(A) All coordinates shall be sub-meter accurate and obtained with a Real-Time Kinematic (RTK) GPS unit using either a base station or the State's virtual reference station (VRS) network. Coordinate positions shall be stored only when the GPS unit has initialization or lock.

(B) The coordinates shall be collected in the 1996 adjustment to the North American Datum (NAD) 83 county coordinate plane of the county in which the data is collected unless other methods are approved by Mn/DOT.

(C) Coordinates for infrastructure constructed over, in, or under a roadway shall be collected at the nearest shoulder. The coordinates and description shall include offset distances indicating the true location.

(D) The Contractor acquiring coordinates shall contact the Contractors constructing the proposed infrastructure to determine revisions to the original Plan. Provide coordinates for all revisions.

SZ-4.2 **ELECTRONIC FORMAT**

The following provisions shall apply to the Electronic Format for GPS Asbuilt:

(A) Coordinates shall be provided in an electronic tabular format and include a description of the corresponding ITS Component for each x-y coordinate.

(B) The Contractor shall acquire Mn/DOT approval of the electronic tabular format prior to collection of the data and submission to Mn/DOT.

(C) Provide a Paper copy and an Electronic copy of a blank tabulation and the collected coordinate tabulation.

(D) Electronic formats shall be made in the most current Mn/DOT version of Environmental Systems Research Institute (ESRI) Shape file and an American Standard Code for Information Interchange (ASCII) Comma Separated Value (CSV) file.

SZ-4.3 **REQUIRED COMPONENTS**

The following provisions shall apply to the Required Components for GPS Asbuilt:

(A) Coordinates shall be required for but not limited to the following ITS Components:

a. Cable Termination locations
b. Handholes
c. Cabinets
d. Conduit (Coordinates shall be every 50 feet and at all changes in direction)
e. Cables (Coordinates shall be every 50 feet and at all changes in direction)
f. Cables installed within inplace conduit (Coordinates shall be every 50 feet and at all changes in direction)
g. Vaults
h. Sign Support Structures
i. Source of Power (SOP)
j. Transformer

SZ-4.4 **AS-BUILT DRAWINGS**

The following provisions shall apply to the As-built Drawings for GPS Asbuilt:

(A) The Contractor shall provide Mn/DOT with electronic coordinate correct As-built drawings. It is the preference of Mn/DOT to have these files submitted in Microstation format, however R12 DXF format is also acceptable.

(B) The drawings used for construction shall be used and all deviations from original Highway and ITS design shall be redrawn and shown in their correct coordinate location.

(C) Do not include previously proposed design information that has changed during the construction of the project. As-built drawings shall reflect the final constructed information only.

(D) Standard linestyles and component symbols used by Mn/DOT for all Highway design shall be used to create the As-built drawings.

SZ-4.5 The Contractor shall acquire Mn/DOT approval of Deliverables prior to Final Acceptance.

SZ-4.6 **MEASUREMENT AND PAYMENT**

No measurement will be made of the various Items that constitute GPs Asbuilt but all such work will be construed to be included in the single Lump Sum payment under Item 2011.601 (GPS Asbuilt). Payment will be made under Item 2011.601 (GPS ASBUILT), which shall be compensation in full for all costs incidental thereto, including but not limited to Data Collection, Electronic Formats, Required Components, As-built Drawings, Deliverables, and all materials and labor necessary to construct the GPS Asbuilt.

SZ-5 (2104) SALVAGE FIBER OPTIC VAULT

This work shall consist of salvaging Fiber Optic Vault and internal and external components as directed by the Engineer for installation on this project. Any damage to the salvaged materials resulting from the removing, salvaging, storing, and delivering operation shall be repaired or replaced at the Contractor's expense.

SZ-5.1 Notify the TMS Integrator by TMS construction phone number (651) 331-8370, a minimum of 48 hours before transporting the Salvaged Fiber Optic Vault and internal and external components, from the job site to the storage site. The storage site is on Mn/DOT property in the Metro area.

(A) Internal and external components shall include but not be limited to the following:

a. Outdoor Fiber Splice Enclosure. The Contractor shall give this to the TMS Integrator.

b. Concrete Drain Headwall.
c. FO Vault Marker posts.

SZ-5.2 The Contractor may store the Fiber Optic Vault within the project limits outside of the Clear Zone or an Engineer approved location.

SZ-5.3 **MEASUREMENT AND PAYMENT**

Measurement will be made by the each constructed as specified. Payment will be made under Item 2104.523 (SALVAGE FIBER OPTIC VAULT) at the Contract bid price per each, which shall be compensation in full for all costs incidental thereto, including but not limited to internal and external components and salvaging the Fiber Optic Vault.

SZ-6 (2104) SALVAGE SERVICE CABINET

This work shall consist of removing, salvaging and delivering the Service Cabinet, internal and external components as directed by the Engineer. The Salvage Cabinet shall be installed on this project. Any damage to the salvaged materials resulting from the removing, salvaging, storing, and delivering operation shall be repaired or replaced at the Contractor's expense.

SZ-6.1 Notify the TMS Integrator by TMS construction phone number (651) 331-8370, a minimum of 48 hours before salvaging the Service Cabinet and components.

SZ-6.2 The Contractor may store the Service Cabinet within the project limits outside of the Clear Zone or an Engineer approved location.

SZ-6.3 **MEASUREMENT AND PAYMENT**

Measurement will be made by the each constructed as specified. Payment will be made under Item 2104.523 (SALVAGE SERVICE CABINET) at the Contract bid price per each, which shall be compensation in full for all costs incidental thereto, including but not limited to salvaging the Service Cabinet including internal and external components, and all materials and labor necessary to construct the Salvage Service Cabinet.

SZ-7 (2104) SALVAGE DMS

This work shall consist of removing, salvaging, and delivering the DMS and internal and external components as directed by the Engineer. The Salvage DMS shall be for installation on this project. Any damage to the salvaged materials resulting from the removing, salvaging and delivering operation shall be repaired or replaced at the Contractor's expense.

SZ-7.1 Notify the TMS Integrator by TMS construction phone number (651) 331-8370, a minimum of 48 hours before salvaging the DMS and components. The TMS Integrator will disconnect existing Communication cables.

SZ-7.2 The Contractor may store the DMS within the project limits outside of the Clear Zone, an Engineer approved location, or at the Mn/DOT Larpenteur Ave. Maintenance station.

SZ-7.3 The support structure shall be included.

SZ-7.4 **SALVAGING REQUIREMENTS**

The following provisions shall apply to the Salvaging Requirements for Salvage DMS:

(A) Remove the DMS from the support structure.

(B) The Contractor shall be responsible for the following:

a. Prevent damage to internal components by securing them prior to removal from the support structure. This may be achieved by tying down or removing the components.
b. Disconnect existing Power cables from the DMS and internal components of the DMS control cabinet by removing from terminals.
c. Secure the DMS during storage by using a method that shall prevent the DMS from becoming damaged from vehicles, vandalism, collapsing or falling over due to wind, and other natural forces.
d. Ensure the storage site (indoor or outdoor) is secure and has adequate room for unloading and loading the DMS.
e. Ensures the storage site is reasonably level and dry.
f. Placing the sign on two pieces of lumber (six inches by six inches by eight feet long) under structural ribs Nos. 2 and 8.
g. At a minimum, stabilize the DMS by attaching four tie down straps (two front and two rear) between lumber and lifting eyes.
h. Handling of the sign at the storage facilities.
i. Transportation of the sign from the storage site to the mounting site.

SZ-7.5 **MEASUREMENT AND PAYMENT**

Measurement will be made by the each constructed as specified. Payment will be made under Item 2104.523 (SALVAGE DMS) at the Contract bid price per each, which shall be compensation in full for all costs incidental thereto, including but not limited to salvaging the DMS, including Salvaging Requirements, internal and external components, disconnecting existing cables, protection and storage, support structure, and all materials and labor necessary to construct the Salvage DMS.

SZ-8 (2104) SALVAGE CABINET

This work shall consist of removing, salvaging the cabinet, internal and external components. The Salvage Cabinet shall be installed on this project. Any damage to the salvaged materials resulting from the removing, salvaging, storing, and delivering operation shall be repaired or replaced at the Contractor's expense.

SZ-8.1 Notify the TMS Integrator by TMS construction phone number (651) 331-8370, a minimum of 48 hours before transporting the salvaged cabinet and components, from the job site to the storage site. The storage site is on Mn/DOT property in the Metro area.

SZ-8.2 The Contractor may store the Cabinet within the project limits outside of the Clear Zone or an Engineer approved location.

SZ-8.3 **MEASUREMENT AND PAYMENT**

Measurement will be made by the each constructed as specified. Payment will be made under Item 2104.523 (SALVAGE CABINET) at the Contract bid price per each, which shall be compensation in full for all costs incidental thereto, including but not limited to salvaging the cabinet including internal and external components, and all materials and labor necessary to construct the Salvage Cabinet.

SZ-9 (2104) REMOVE CABLES

This work shall consist of Removing Cables, which shall be in accordance with the Mn/DOT Standard Specifications, Mn/DOT Standard Plans/Plates, the Plans, and the following:

SZ-9.1 Remove Cables from termination or splice location to termination or splice location by extracting designated cables from existing conduit and end equipment in a manner that is harmless to the cables that shall remain intact.

SZ-9.2 All removed Cables shall become the property of the Contractor and shall be disposed of outside of the Right of Way.

SZ-9.3 **MEASUREMENT AND PAYMENT**

No measurement will be made of the various Items that constitute Remove Cables but all such work will be construed to be included in the single Lump Sum payment under Item 2104.601 (Remove Cables).

SZ-10 (2550) MATERIALS

The following provisions shall supplement Mn/DOT 2550.2A:

SZ-10.1 All Materials, work methods, and equipment shall comply with the standards of the National Electrical Manufacturers Association, Electronic Industries Association, Underwriters Laboratory, Inc., National Electrical Code; Telecommunications Industries Association, local codes and ordinances, the requirements of the Contract, these Special Provisions, and the Plan.

SZ-10.2 The Contractor warranties all F&I materials and workmanship as well as workmanship on materials that were paid for as an Install item for a minimum of six months after completion and acceptance of the work. Specific items within these Special Provisions may require longer warranty periods. The warranty period begins when the Contractor completes all construction obligations, documented as the Final Completion Date on the Change in Construction Status report.

SZ-10.3 Use stainless steel hardware (e.g. mounting bolts, nuts, washers, and external hinges, etc.) on all outdoor TMS components (vaults, cabinets, TMS Shelter Cabinets, handholes, electrical services, etc.).

SZ-10.4 The Contractor is responsible for rounding and smoothing sharp corners and edges of all F&I TMS components.

SZ-11 Mn/DOT FURNISHED MATERIALS

The following provisions shall apply to State Provided Materials:

SZ-11.1 State provided materials are procured and stored by Mn/DOT, unless otherwise stated and are provided to the Contractor with proper notice. The Contractor is responsible for any damage to the equipment once Mn/DOT has provided the materials to the Contractor.

SZ-11.2 **LOCATOR BALLS**

Mn/DOT provides the 3M 1401 four-inch (100 mm) Orange Ball Marker. The Contractor shall be responsible for the following:

(A) Contacting the TMS Integrator by TMS construction phone number (651) 331-8370 and arrange to have the Ball Markers delivered. A seven-day notice is necessary prior to ball marker delivery.

(B) Providing the TMS Integrator with an exact count of Locator Balls needed for the Project.

(C) Mounting the hardware.

SZ-11.3 **SHEATH GROUNDING UNIT**

The SGU is provided by Mn/DOT with new Mn/DOT Furnished Control cabinets for mounting on foundations only. The SGU shall be provided by the Contractor for all other Cabinets.

SZ-11.4 **Mn/DOT FURNISHED FIBER OPTIC SPLICE VAULT MARKER**

The Contractor shall notify the TMS Integrator by TMS construction phone number (651) 331-8370, a minimum of 48 hours before delivery.

SZ-12 TMS INTEGRATION

The Regional Traffic Management Center (RTMC) will assign a Traffic Management System (TMS) Integrator to each project involving construction of the Traffic Management System. The TMS Integrator shall serve as a technical resource to Mn/DOT Construction Administration. Contact information will be provided at the Pre-construction meeting. If the TMS Integrator is not reachable, contact TMS Integrator by TMS construction phone number (651) 331-8370.

SZ-12.1 TMS INTEGRATOR RESPONSIBILITIES

For Signal Interconnect and infrastructure located downstream from the NCP, See Signal Plans and Division SS Special Provisions. The TMS Integrator will be responsible for performing the following tasks:

(A) Recommend approval/disapproval of TMS components and/or TMS construction methods to the project engineer.

(B) Help to resolve Plan and Special Provision discrepancies.

(C) Provide technical guidance to Contractors as directed by the Engineer.

(D) **Staking**

a. The Contractor shall stake or flag proposed FO cable and conduit with trace wire which will be used for future FO cable installation. The Contractor shall acquire Integrator approval of these locations prior to installation.
b. An Integrator shall be present when locations are staked or flagged for, Vaults, control cabinets, service cabinets, DMS Post Mounted,
c. The Contractor shall be responsible for locating all existing utilities prior to installation of any proposed Integrator staked TMS infrastructure locations. Staking done by Mn/DOT Integrator is not a substitute for existing utility location.

(E) Respond to requests for Mn/DOT Furnished Materials.

(F) Assist with TMS construction inspection.

(G) Perform the following actions after loop detector installation:

a. Testing.
b. Terminate lead-in conductors.
c. Configure loop detector modules within cabinets.

SZ-12.2 TMS PROJECT SUBMITTAL AND FO TEST DOCUMENTATION

TMS Project Submittal and FO Test Documentation shall be reviewed by a TMS Integration representative assigned to the project. The representative will evaluate and make recommendations to the Engineer regarding acceptance of the required documentation. Contact information will be provided at the Pre-construction meeting.

SZ-13 GROUNDING

The following provisions shall apply to Grounding:

SZ-13.1 SINGLE POINT GROUNDING

All grounded devices shall connect to one single piece ground rod, via the shortest and straightest route. Connect the devices' chassis and electrical grounds at a ground buss before connecting them to the earth ground rod. Connect the ground busses via conductors that meet the requirements of SINGLE POINT GROUNDING.

SZ-13.2 **GROUND RODS AND GROUND ROD CONNECTIONS**

The following provisions shall apply to ground rods and ground rod connections:

(A) The ground rod shall be 4.6 m (15 feet) long, one piece, and comply with Mn/DOT 2545.3R.

(B) The ground rod shall be in the center of cabinet foundations unless otherwise specified in the Plan details.

(C) An oxide inhibitor shall be applied over bonded connections to ground rods. The Oxide Inhibitor must be U.L. listed and applied to the bonded area between the temperatures of -22 °C (-30 °F) and 149 °C (300 °F).

(D) The Contractor shall clean each grounding component with 300-grit emery cloth before bonding and apply a mineral oil based oxide inhibitor to the bond area.

(E) Bonding the ground conductor to the ground rod shall be accomplished by one of the following bonding methods:

a. Mechanical. The Mechanical Grounding connector shall have the following characteristics:

i. Shall be sized ½ inch diameter for Lightning rods and 5/8 inch diameter for Ground rods.
ii. Shall include two stainless steel cap screws to secure the cable to the ground electrode for a positive electrical connection.

b. Exothermic Welding. Exothermic Welding shall be used when grounding TMS Shelter Cabinets, CCTV poles and DMS structures with lightning braid.

(F) **APL**

Mn/Dot approved Mechanical Grounding connectors for Lightning rods and Ground rods are listed on the following Website:

http://www.dot.state.mn.us/products/trafficmgtsystems/index.html

SZ-13.3 **CABLES**

The following provisions shall apply to the grounding of Cables:

(A) Ground all Cable shields entering cabinets and splice enclosures.

(B) Maintain the electrical continuity of the Cable shields.

(C) Shield bonding shall comply with RUS splicing Standard PC-2, Section 3.3.

(D) Bonding connectors shall comply with RUS standard PE-33 (Cable Shield Connectors).

SZ-13.4 **OUTDOOR FIBER SPLICE ENCLOSURE**

The following provisions shall apply to the grounding of Outdoor Fiber Splice Enclosure:

(A) All FO cable shields shall be bonded to the internal ground lug within the Outdoor Fiber Splice Enclosure. Bond one SGU conductor to the ground lug of the splice enclosure and the other conductor to the outside ground rod.

(B) A ground a strap shall connect the two grounding post to electrically tie them together.

SZ-13.5 **SERVICE CABINETS OR EQUIPMENT**

The following provisions shall apply to the grounding of Service Cabinets or Equipment:

(A) Furnish and install a ground rod.

(B) Ground the cabinet ground buss to the ground rod with a bare 1/C No. 6 solid copper wire.

(C) Route each ground conductor to the ground buss via the straightest route that does not hinder maintenance or installation activities.

SZ-13.6 **CONTROL CABINET, GROUND MOUNTED**

The following provisions shall apply to the grounding of Control Cabinet, Ground Mounted:

(A) Ground the cabinet ground buss to the ground rod with a bare 1/C No. 6 solid copper wire.

(B) Connect the Sheath Grounding Unit between the cabinet equipment ground buss and the fiber optic pigtail armor.

(C) The Sheath Grounding Unit is provided with new Mn/DOT furnished Ground mounted Control cabinets. The Contractor shall see the Signal Plan and Division SS Special provisions for information and requirements regarding SGU in Signal Control Cabinets.

(D) Route each ground conductor to the ground buss via the straightest route that does not hinder maintenance or installation activities.

SZ-13.7 **FO CABLE**

The following provisions shall apply to the grounding of Fiber Optic Cable:

(A) The Contractor furnishes and installs the appropriate SGU for all fiber optic cable ground locations including but not limited to Control cabinets, Signal Control Cabinets, Shelter Cabinets, and vaults. See Mn/DOT FURNISHED MATERIALS on page 7 for locations where Mn/DOT will furnish and install a SGU. See Has Met to determine the type of SGU required.

(B) A SGU shall be required in the following locations:

a. Control cabinets require a SGU to ground the outer shield and armor of the fiber optic cables to the equipment ground buss.
b. Shelters require one SGU on each FO cable entering/exiting the Shelter.
c. Vaults require one SGU between the splice enclosure and the ground rod.

(C) Utilize a SGU to ground the outer shield and armor of the fiber optic cables in control cabinets to the equipment ground buss.

(D) An oxide inhibitor shall be applied over bonded connections. The Oxide Inhibitor must be U.L. listed and applied to the bonded area between the temperatures of -22 °C (-30 °F) and 149 °C (300 °F).

(E) The Contractor shall clean each grounding component with 300-grit emery cloth before bonding and apply a mineral oil based oxide inhibitor to the bond area.

(F) In vaults mount the SGU to the inner wall of the vault along the upper half. The SGU shall have the following features:

a. Low impedance ground path for high voltage transients while allowing location and monitoring signals to pass.
b. Automatic reset.
c. Failsafe circuitry design.

d. Hybrid surge suppression circuitry designed for below grade use.
e. No. 6 AWG solid copper lead wires.

(G) Grounding of fiber optic cables must be within the first five feet after the conduit entrance.

(H) **Has Met**
The following items have met the above specifications

a. Norscan 2706, SGU-1 for the following:
   i. Armored FO Pigtail Cable ends contained within a vault
   ii. Trunk FO Cable ends except when the Trunk FO cable end is located in a vault and is the end of the Trunk FO cable run:

b. ACT 444-150-352 or Norscan 2310 FC, SGU-2 for the following:
   i. Armored FO Pigtail Cable ends contained within a Control Cabinet.
   ii. Trunk FO Cable ends when the Trunk FO cable end is located in a vault and is the end of the Trunk FO cable run:

SZ-13.8 **DMS**
The following provisions shall apply to the grounding of DMS and DMS POST MOUNTED:

(A) The Lightning Protection conductor shall have the following characteristics:

a. 32 strands of No.17 AWG tinned copper wire.
b. 11.1 mm (0.4375 in) in diameter.
c. Braided smooth twist.
d. Net weight of 97 kg (215 lb) per 305 m (1000 ft).

(B) Connect the Lightning Protection conductor to the ground lug located on the rear exterior of the DMS.

(C) The conductor horizontal run along the support structure shall be secured to the support structure by utilizing stainless steel straps and hardware every three feet.

(D) The conductor vertical run along the support structure shall be secured to the support structure by utilizing stainless steel straps and hardware at four points.

(E) Install the top of the ground rod > 150 mm (6 in) below the surface.

(F) **Has Met**
The following items have met the above specifications

a. Lightning Protection Conductor: Thompson Lightning Protection No. 48.

SZ-13.9 **MEASUREMENT AND PAYMENT**
GROUNDING includes but shall not be limited to Single Point Grounding, Ground Rods and Ground Rod Connections, Cables, Outdoor Fiber Splice Enclosure, Service Cabinet or Equipment, Control Cabinet Ground Mounted, FO Cable, DMS, and all materials and labor necessary to complete Grounding. GROUNDING shall be considered incidental for which no direct compensation will be made.

SZ-14 LABELING

The following provisions shall apply to Labeling:

SZ-14.1 Secure identifying labels to each fiber, cable, component, cabinet in the manner described in the Plan and these Special Provisions.

SZ-14.2 Contractor shall not use wire ties for labeling cables.

SZ-14.3 **FIBER OPTIC CABLES**
The following provisions shall apply to labeling Fiber Optic Cables:

(A) See "Fiber Optic Cable Labeling Detail" in the Plans for additional information.

(B) Colored electrical tape shall be applied both ends of Trunk FO and pigtail cables to indicate either a pigtail or the direction the majority of the FO Cable travels from a structure. The direction of the cable will not always coincide with the initial direction the cable leaves a structure. The color of the tape shall represent the following:

a. Northbound-NB (blue)
b. Southbound-SB (green)
c. Eastbound-EB (yellow)
d. Westbound-WB (orange)
e. Pigtails-(White)

(C) Descriptive identifiers shall be written on the colored tape with a laundry marking pen. Descriptive identifiers shall include a combination of the following:

a. Identify the nearest meter mark.
b. Identify the FO Cable number.
c. Identify the item that the fiber is traveling to by name. (e.g. Cab. 94-212.64, Cam 808, DMS 94-206.70, ect…)
d. Identify the fiber count and mode.
e. Identify the direction the majority of the FO Cable travels from a structure. The direction of the cable will not always coincide with the initial direction the cable leaves a structure.

(D) Labeling shall include the following identifiers and be applied to the outer jacket of the FO Cable at the following structures and locations:

a. Control Cabinets and Shelter Cabinets

i. The FO Cable, within 18 inches from the end of the conduits with the following identifiers: FO Cable number, direction, fiber count and mode, and nearest meter mark.
ii. The FO pigtail, within 18 inches from the connection to the splice panel (White tape) with the following identifiers: name, fiber count and mode, and nearest meter mark.

b. Vaults

i. The Trunk FO Cable, within 18 inches from the end of the conduits with the following identifiers: FO Cable number, direction, fiber count and mode, and nearest meter mark.
ii. The FO pigtail, within 18 inches from the end of the conduit (White tape) with the following identifiers: name, fiber count and mode, and nearest meter mark.

c. Outdoor FO Splice Enclosure

i. The Trunk FO Cable, within 18 inches from the end with the following identifiers: FO Cable number, direction, fiber count and mode, and nearest meter mark.
ii. The FO pigtail, within 18 inches from the end (White tape) with the following identifiers: name, fiber count and mode, and nearest meter mark.

iii. Splice trays with the FO Cable ID number and each fiber number on the Manufacturer provided cover label.

SZ-14.4 **FIBER DISTRIBUTION COMPONENTS**

The following provisions shall apply to labeling Fiber Distribution Components:

(A) The Contractor shall label indoor pigtail six-paks on the outer jacket at the Splice Panel tray/wheel and inside the Patch Panel to indicate the trunk cable ID number and which six fibers are spliced to the six-pak (e.g. 94-12 SM7-12).

(B) Label the front of the patch panels with the fiber optic cable number, direction, and fiber count.

(C) Label the front of the splice panels with the fiber optic cable number, direction, and fiber count.

(D) Label splice trays/splice wheels with the cable ID and fiber numbers contained in the tray/wheel.

SZ-14.5 **ELECTRICAL COMPONENTS**

The following provisions shall apply to labeling Electrical Components:

(A) Label the function of each circuit breaker in each circuit breaker enclosure on the front panel below the breaker.

SZ-14.6 **MEASUREMENT AND PAYMENT**

LABELING includes but shall not be limited to FO Cables, Fiber Distribution Components, Electrical Components, and all materials and labor necessary to complete Labeling. LABELING shall be considered incidental for which no direct compensation will be made.

SZ-15 ELECTRICAL SERVICE

This work shall consist of coordinating the installation of Electrical Service, which shall be in accordance with the Mn/DOT Standard Specifications, Mn/DOT Standard Plans/Plates, the Plans, and the following:

SZ-15.1 The Contractor shall provide power to the service panel(s) and verify the actual work to be done and all the associated costs.

SZ-15.2 Power transfers from existing to proposed shall occur between 9:00 am and 2:00 pm, Monday-Friday unless approved by the Engineer. Power shall be maintained outside these hours.

SZ-15.3 Proposed source of power addresses are identified in the Plan.

SZ-15.4 **POWER UTILITY COMPANY COORDINATION**

The following provisions shall apply to the Power Utility Company Coordination requirements for Electrical Service:

(A) Proposed power sources shall be required as denoted in the Plan. The Contractor shall be responsible for the following:

a. Process the **existing** "Application for Electrical Service" for each location.
b. Coordinate with the Utility Company to ensure the proper location of electrical services provided by the Utility.
c. Coordinate the Utility Company construction with the Project construction schedule to ensure power is available when needed.
d. Coordinate with the Utility Company for installation of the power meter and power supply infrastructure.

(B) Power sources shall be removed or salvaged as denoted in the Plan. The Contractor shall be responsible for the following:

a. Coordinate with the Utility Company to ensure the proper location of electrical services by the Utility.
b. Coordinate the Utility Company construction with the Project construction schedule to ensure power is removed as needed.
c. Coordinate with the Utility Company for removal of the power meter and power supply infrastructure.

(C) Fees for the "Application for Electrical Service" and payment to the Utility Company for providing the electrical service connections shall be the responsibility of the Contractor. Mn/DOT has negotiated estimated costs for providing electrical service connections with the Power Utility Company. This information will be provided to the Contractor upon award of the Contract.

(D) The Contractor shall secure approval from the Engineer for any changes to the Electrical Service as reflected in the Plan.

(E) The Power Utility Company name is Xcel. Following are the name, phone number, location, premise number, and account number, responsibilities for each of the Project Power Utility Company Designers:

a. Gregg Wenzel, Wk.: (952) 829-4513:

PROPOSED

i. TH 13 @ Sheridan Ave., Premise Number: 304275691, Account Number: 417756**.**

REMOVAL OR ABANDON

i. TH 13 on south side-1000 feet west of Co Rd. 5, Premise Number: 304165101, Account Number: 8966193

SZ-15.5 Notify Mn/DOT Business Services Section when Mn/DOT is to assume ownership of the proposed source of power. Following is the contact information:

Audrey Frank (651) 234-7441
Metro Accounts Payable-Mn/DOT Mailstop 050
Waters Edge Building
1500 County Road B2
Roseville MN 55113

SZ-15.6 **MEASUREMENT AND PAYMENT**

No measurement will be made of the various Items that constitute Electrical Service but all such work will be construed to be included. The Contractor shall provide the Engineer a copy of the invoice from the power company. Payment will be made for the invoice cost paid to the power company plus 10%. This payment shall be compensation in full for all costs incidental thereto, including but not limited to providing power to service panels, power company fees, Power Utility Company Coordination, notifying Mn/DOT of ownership details, and all materials and labor necessary to construct the Electrical Service.

SZ-16 JOB SPECIFIC SPECIFICATION CONSIDERATIONS

SZ-16.1 The Traffic Management System shall be fully operational Monday-Friday from 5:00 am to 9:00 am and 3:00 pm to 7:00 pm unless approved by the Engineer.

SZ-16.2 All Trunk FO Cables shall be fully operational and connected to the RTMC network Monday-Friday from 5:00 am to 9:00 am and 3:00 pm to 7:00 pm unless approved by the Engineer. The Contractor shall install temporary connections if Trunk FO Cables will be non-operational during the above required hours of full operation. The temporary system shall require MN/DOT TMS Integrator approval and shall be considered incidental. **The Contractor shall be subject to a daily charge assessed at a rate of $1000.00 per day for each day or portion thereof with which the Engineer determines that the Contractor has not complied.**

SZ-16.3 Signal Plans and Division SS Special Provisions will describe all measurement, payment, quantities, and construction downstream from the NCP.

SZ-17 PROJECT TESTING AND DOCUMENTATION

This work shall consist of Project Documentation Submittals for Components, FO Cable Testing, and As-builts which shall be in accordance with the Mn/DOT Standard Specifications, Mn/DOT Standard Plans/Plates, the Plans, and the following:

SZ-17.1 Project Testing and Documentation Submittals shall be presented directly to the Engineer. Project Testing and Documentation Submittals shall be presented as three complete packages unless prior authorization is made with the Engineer. The complete packages shall be defined as one submittal for Components, one submittal for Testing, and one submittal for As-builts. Each submittal shall include all required documentation. No payment shall be made until a submittal package is received and approved by the Engineer.

SZ-17.2 Project Testing and Documentation Submittals are required for the following items:

(A) Components

(B) FO Cable Testing.

(C) As-builts

SZ-17.3 **COMPONENTS**

The following provisions shall apply to project component testing and documentation submittals for Components:

(A) Component Documentation Submittals shall be submitted to the Engineer within two weeks subsequent to contract approval. **The Contractor shall be subject to a daily charge assessed at a rate of $200.00 per day for each day or portion thereof with which the Engineer determines that the Contractor has not complied**. The Engineer reserves the right to allow the Contractor greater than two weeks after contract approval to make submittals.

(B) The Contractor shall submit two sets of component specifications and/or shop drawings for each project component, assembled or whole, to the Engineer. The Contractor shall forward any Mn/DOT recommended revisions to the Manufacturer.

(C) Two separate copies of project Component documentation shall be submitted as a complete and organized package unless otherwise directed by the Engineer.

(D) The Engineer will approve or reject submittals within two weeks of receipt. The TMS Component Documentation Submittal package shall be approved by the Engineer prior to installation or payment for the component.

(E) Project Component documentation submittals shall include the manufacturer's name, manufacturer's specification, and/or detailed drawings for all items listed on the **COMPONENT CHECK-OFF LIST** on page 18.

(F) It is not necessary to submit manufacturer's information for components already identified as meeting the specification in the "has met" statement.

(G) The Contractor shall complete the check-off list for "Has Met" items and include this list as part of the Project Documentation Component Submittal package. See **COMPONENT CHECK-OFF LIST** on page 18.

SZ-17.4 **FO CABLE TESTING**

The following provisions shall apply to FO Cable Testing Submittals:

(A) Fiber Optic Testing Documentation Submittals shall be submitted to the Engineer within 30 Working days subsequent to the last test. **The Contractor shall be subject to a daily charge assessed at a rate of $200.00 per day for each day or portion thereof with which the Engineer determines that the Contractor has not complied**. The Engineer reserves the right to allow the Contractor greater than 30 Working days after contract approval to make submittals.

(B) Documentation of test equipment calibration and certification (See (2550) FIBER OPTIC CABLE TESTING on page 32) shall be submitted as part of the Project Documentation Submittal for FO Cable Testing along with the test results. The calibration certificate shall be dated no more than one year prior to the last date of FO Cable Testing. FO cable testing shall be rejected if calibration certificates are out of date.

(C) The Contractor shall use the "Fiber Optic Schematic" sheets in the Plan as a template for recording power meter and OTDR test data as well as the physical characteristics of the FO cable and FO cable run.

(D) FO Cable test parameters are identified in a later section of this document. See (2550) FIBER OPTIC CABLE TESTING on page 32.

(E) The Contractor shall utilize a Manufacturer-recommended "OTDR Trace Analysis" and a "Power Meter Report" software program or a single software program that is a combination of "ODTR Trace Analysis" and "Power Meter Report". The software shall conform to SZ-33.8 (A) (See page 33). The Contractor shall identify the software to Mn/DOT as part of the FO Cable Testing Project Documentation Submittal. If Mn/DOT does not already own a copy of the software, the Contractor shall provide Mn/DOT with a "OTDR Trace Analysis" and a "Power Meter Report" Viewer application.

(F) The Contractor shall notify the Engineer prior to beginning the FO system testing. The Contractor shall provide all test documentation electronically on a CD. The Contractor shall use Mn/DOT's file naming convention for OTDR electronic test files. The Engineer may observe each test.

(G) OTDR electronic files shall be stored under a directory named by the highway number. These files must include the following items:

a. Date of each test completed.
b. The "Index of refraction" for the FO cable as recorded on the cable spool by the manufacturer or for existing FO cable, the Index of Refraction that was utilized.

c. File names and notes as described by the Mn/DOT file naming convention. See **FO CABLE TEST DOCUMENTATION** on page 34 for file naming convention example.

(H) The Contractor shall provide a test summary describing the following items:

a. Final measurements that are out of range.
b. Engineer and TMS Integrator approved changes in specified methods.
c. OTDR manufacturer, equipment model number, and last date calibrated.
d. Dates of tests performed by both Power Meter & OTDR.
e. Special circumstances.

(I) The Contractor shall provide the Engineer with the Manufacturer's reel (spool) test documentation. This is required for all Contractor furnished FO cable.

SZ-17.5 **AS-BUILTS**

The Contractor shall submit As-built drawings plan sheet modifications. These marked up Plan sheets are meant to satisfy the RTMC's need for as-built data. These sheets do not satisfy the Contractor's responsibilities with regard to Gopher State One Call.

(A) As-Built Documentation Submittals shall be submitted to the Engineer subsequent to construction completion. As-Built Documentation Submittals shall reflect the final location of all items constructed for the project, not just the Components and FO Cable. It shall also include any roadway or other construction included in the project.

SZ-17.6 **MEASUREMENT AND PAYMENT**

PROJECT TESTING AND DOCUMENTATION SUBMITTALS includes but shall not be limited to Testing and Documentation Submittals, Components, FO Cable Testing, As-Builts, and all materials and labor necessary to prepare and submit the Project Testing and Documentation Submittals. PROJECT TESTING AND DOCUMENTATION SUBMITTALS shall be considered incidental for which no direct compensation will be made.

SZ-17.7 **COMPONENT CHECK-OFF LIST**

The Contractor shall complete the following Component check-off list for "Has Met" and "APL" items and include this list as part of the submittal package. For "Has Met" components the Contractor may choose to submit components of equal quality to the Engineer for TMS Integrator approval. For "APL" components the Contractor may choose to submit components through the process for listing products on the APL. The Contractor shall provide submittals for items that do not have a Has Met or are not on the APL.

Product Manufacturer	Material Description	Special Provisions Section	"Has Met" or "APL" Part Number *(No Submittal required if "has met" or "APL" listed here)*	***Submittal*** Provided (✓)
	SGU-1	SZ-13.7 (H)		
	SGU-2	SZ-13.7 (H)		
	Ground Rod Connector	SZ-13.2		
	Fiberoptic Splice Vault	SZ-25.9		
	Outdoor Fiber Splice Enclosure	SZ-26.7		
	Outdoor Fiber Splice Enclosure Splice Tray	SZ-26.7 SZ-35.8		
	Outdoor Fiber Splice Enclosure Cable Addition Kit	SZ-26.7 SZ-35.8		
	Outdoor Fiber splice Enclosure Double Butt Adapter Bolt Kit	SZ-26.7 SZ-35.8		
	Outdoor Fiber splice Enclosure Triple Butt Adapter Bolt Kit	SZ-26.7 SZ-35.8		
	Buried Cable Sign Plastic-Resin Sheath	SZ-27.7		
	Cat 6 Cable	SZ-30.7		
	Temporary Communication System	SZ-31	N/A-Submittal Required	
	Lightning Protection Conductor	SZ-13.8		
	Indoor FO Pigtails	SZ-34.2		
	Fiber Bulkhead Adapters	SZ-34.3		
	Preterminated armored FO Pigtail Cable	SZ-40.2		
	Armored FO Pigtail Cable	SZ-40.3		
	Fiber Optic Trunk Cable	SZ-40.3		

SZ-18 INDUSTRY ACCEPTED LUBRICANTS FOR ALL CABLES

The following provisions shall apply to Industry Accepted Lubricants for all Cables:

SZ-18.1 The "Industry Accepted Lubricants" referenced in 2550.3, used during cable pulling operations shall be UL Listed and be compatible with cable insulation materials. They shall not deteriorate the cable insulation or performance.

SZ-18.2 Lubricants shall not contain wax or grease.

SZ-18.3 The appropriate lubricant shall be applied as specified by the manufacturer for its intended use.

SZ-19 INSPECTION AND CLEANING EXISTING CONDUIT SYSTEMS

The following provisions shall apply to Existing Conduit Systems:

SZ-19.1 Existing TMS conduit systems may consist of stick PVC, stick PE, continuous PE, IMC or RSC.

SZ-19.2 When installing copper cable or FO cable in existing conduits through existing hand holes, the Contractor shall visually check the cable route to ensure that there is a smooth transition between exit and entrance elevations and that the horizontal and vertical angle is not so sharp as to cause damage to the cable as it is being pulled through the existing conduit. Should the Contractor encounter sharp bends in existing conduit, the Contractor shall bring the situation to the Engineer's attention. Reinstalling existing conduit through a handhole to provide smooth transitions is a potential solution.

SZ-19.3 Clean the existing conduit of any debris that could impede pulling FO or copper cable through it or that could damage the cable if the debris remained, as directed by the Engineer.

SZ-19.4 Inspection And Cleaning Existing Conduit Systems includes but shall not be limited to inspecting the cable route, notifying the Engineer of sharp bends, cleaning, and all materials and labor necessary to Inspect and Clean Existing Conduit Systems. INSPECTION AND CLEANING EXISTING CONDUIT SYSTEMS shall be considered incidental for which no direct compensation will be made.

SZ-20 FO CABLE REPAIR OR REPLACEMENT

FO Cable Repair or Replacement shall be in accordance with the Mn/DOT Standard Specifications, Mn/DOT Standard Plans/Plates, the Plans, and the following:

SZ-20.1 **EXISTING FO CABLE**

The following provisions shall apply to Existing FO Cable:

(A) Exercise caution and excavate by hand or by utilizing a vacuum excavator when exposing an existing FO cable.

(B) All nicks or abrasions shall be reported to the TMS Integrator prior to making repairs.

(C) The FO Cable bending radius shall not be exceeded while handling the FO Cable.

SZ-20.2 **DAMAGED FO CABLE**

The following provisions shall apply to Damaged FO Cable:

(A) Active FO Cable that is severed or otherwise rendered not useable by Contract activities shall be repaired. The cost of the Contract shall reduce at the rate of $1,000 per hour until the repair is complete. The penalty shall begin when the Contractor severs the cable or otherwise renders the FO Cable unusable. The penalty shall continue until the permanent repair is complete or until an approved temporary splice is installed. A part of an hour shall count as a full hour. Notify the

TMS Integrator by TMS construction phone number (651) 331-8370 as soon as the cable damage is discovered.

(B) The Contractor shall stock approved splice kits to repair any Mn/DOT cable damaged by construction activities

(C) Spliced repairs to Damaged FO Cable shall comply with the following:

a. Initial emergency repairs to FO Cable shall utilize mechanical splices unless all fibers (severed and not severed) are fusion spliced within 24 hours.
b. Splices shall be located within existing splice vaults.
c. Splices shall comply with the requirements for FO Cable Splicing. See the Engineer for FO Cable splicing requirements.
d. Mn/DOT shall withhold payment until approved FO Cables with fusion splices have been installed.

(D) New cable shall be furnished and installed for cable that has suffered damage caused by contract activities if the damage affects performance or longetivity.

(E) Nicks or abrasions caused by exposing any cable by hand digging or vacuum excavation shall be sealed with rubber splicing tape. Seal nicks that penetrate through the cable jacket to the armor with a cast epoxy kit.

SZ-20.3 **HAS MET**
The following items have met the above specifications:

(A) Sealing nicks and abrasions: 3M Scotchcast kits and 3M Scotch #23 rubberized splicing tape.

SZ-20.4 **MEASUREMENT AND PAYMENT**
FO CABLE REPAIR OR REPLACEMENT includes but shall not be limited to devices, enclosures, and all materials and labor necessary to construct the FO Cable Repair or Replacement. FO CABLE REPAIR OR REPLACEMENT shall be considered incidental for which no direct compensation will be made.

SZ-21 ELECTRIC AND ELECTRONIC CABLE REPAIR OR REPLACEMENT

Electric and Electronic Cable Repair or Replacement shall be in accordance with the Mn/DOT Standard Specifications, Mn/DOT Standard Plans/Plates, the Plans, and the following:

SZ-21.1 The Contractor shall stock approved splice kits to repair any Mn/DOT cable damaged by construction activities.

SZ-21.2 Notify the Engineer and TMS Integrator of any damaged cable or damaged conduit that contains cables before starting repair.

SZ-21.3 Electric, electronic, video and telephone cables are found within the project limits and may be impacted or are replaced by construction activities. The Contractor shall exercise caution when working near existing cables. Exercise caution and dig by hand or use vacuum excavator when within two feet of exposing the existing cables.

SZ-21.4 Nicks or abrasions caused by exposing any cable by hand digging or vacuum excavation shall be sealed with rubber splicing tape. Seal nicks that penetrate through the cable jacket to the armor with a cast epoxy kit.

SZ-21.5 Above ground, temporary, twisted pair, control cable splices shall be repaired with button style, gel filled, crimp-on butt splices enclosed in zippered poly bags. Splices shall be protected in a manner approved by the Engineer and TMS Integrator until the permanent splices are installed.

SZ-21.6 Permanent repairs to twisted pair cables shall utilize button style crimp-on Butt splices within an enclosure that is rigid-body, non-re-enterable, made of translucent polypropylene, and packed with a urethane compound. Rubber tape shall be used to seal the ends of the enclosure. The enclosure is available in 4-pr, 18-pr, and 50 pr sizes.

SZ-21.7 Cables severely damaged and not replaced in a timely manner, shall be repaired and maintained until cable replacement is made.

SZ-21.8 New cable shall be furnished and installed for cable that has suffered damage caused by contract activities if the damage affects performance or longetivity.

SZ-21.9 Engineer and TMS Integrator approved materials shall be used to replace cable.

SZ-21.10 **HAS MET**
The following items have met the above specifications:

(A) Butt Connector: 3M UY2 or UR2 as appropriate

(B) Enclosure for permanent repairs to twisted pair cables: 3M Better Buried Closure with 3M Scotchlok Shield Connector and 3M High Gel Encapsulating Compound.

(C) Sealing nicks and abrasions: 3M Scotchcast kits and 3M Scotch #23 rubberized splicing tape.

SZ-21.11 **MEASUREMENT AND PAYMENT**
ELECTRIC AND ELECTRONIC CABLE REPAIR OR REPLACEMENT includes but shall not be limited to devices, enclosures, and all materials and labor necessary to construct the Electric and Electronic Cable Repair or Replacement. ELECTRIC AND ELECTRONIC CABLE REPAIR OR REPLACEMENT shall be considered incidental for which no direct compensation will be made.

SZ-22 ELECTRIC AND ELECTRONIC CABLE

Electric and Electronic Cable shall be in accordance with the Mn/DOT Standard Specifications, Mn/DOT Standard Plans/Plates, the Plans, and the following:

SZ-22.1 The Contractor shall provide slack cable within all handholes and Pull Vaults. Provide three feet for each cable entering or exiting a handhole or Pull Vault.

SZ-22.2 Splices are not allowed in electric or electronic cable without Engineer and TMS Integrator approval.

SZ-22.3 Power, Control, and RF cable shall be one-piece between termination points.

SZ-22.4 When using crimp-on connectors, the Contractor shall execute the following operations:

(A) Install the insulation of cables deep enough into lugs to ensure that the insulation acts as a strain relief.

(B) Crimp both the conductor and the insulation to the lug.

(C) Form the crimps with an appropriate ratchet style crimp tool.

SZ-22.5 Protect non-terminated Electric and Electronic Cable, located in handholes from moisture intrusion by providing epoxy encapsulation for cable ends. It is not necessary to provide epoxy protection for non-terminated cable ends in control/splice cabinets.

SZ-22.6 **MEASUREMENT AND PAYMENT**

ELECTRIC AND ELECTRONIC CABLE includes but shall not be limited to crimping connectors, grounding, maintaining electrical continuity, protecting non-terminated cables, and all materials and labor necessary for the construction of Electric and Electronic Cable. ELECTRIC AND ELECTRONIC CABLES shall be considered incidental for which no direct compensation will be made.

SZ-23 (2550) FOUNDATIONS

Foundations shall be shall be in accordance with Mn/DOT 2565.3, other applicable Mn/DOT Standard Specifications, Mn/DOT Standard Plans/Plates, the Plans, and the following:

SZ-23.1 Foundations are located as required by the Mn/DOT Construction inspector and TMS Integrator. The TMS Integrator will stake foundation locations for the Contractor on request. Provide the TMS Integrator with 48 hours notice.

SZ-23.2 Concrete Mix 3A32 or equal shall be utilized unless otherwise noted on a Mn/DOT Standard Plan/Plate, the plan, or within these provisions.

SZ-23.3 Conduits internal to the foundation shall be constructed per Plan.

SZ-23.4 Conduits within foundations shall be NMC.

SZ-23.5 Grout all openings around conduits.

SZ-23.6 Typically concrete foundations shall be constructed 100 mm (four inches) above and 200 mm (eight inches) below the finished grade unless otherwise noted on a Mn/DOT Standard Plan/Plate, the plan, or within these provisions.

SZ-23.7 The contractor shall furnish and install ground rods as per Plan details. Where multiple items are located on the same pad it is acceptable to utilize a common ground rod.

SZ-23.8 See GROUNDING on page 8 for grounding specifications.

SZ-23.9 Precast foundations are allowed.

SZ-23.10 Precast sidewalks are allowed. Remove any lifting loops if installed.

SZ-23.11 Sidewalks shall be constructed as required per plan detail.

SZ-23.12 The Contractor shall grade foundations, provide fill, and haul spoil as needed.

SZ-23.13 **CONTROL CABINET, GROUND MOUNTED FOUNDATION**

The following provisions shall apply Cabinet Foundation:

(A) Secure Control Cabinet to the Foundation with 103 mm (4 inch) long, 10 mm (3/8 inch) diameter, Stainless Steel Quick Bolts (wedge bolts).

(B) Secure service equipment to the service foundation with 103 mm (4 inch) long, 10 mm (3/8 inch) diameter, Stainless Steel Quick Bolts (wedge bolts).

(C) The Control cabinet foundations shall comply with the Plan detail.

SZ-23.14 **MEASUREMENT AND PAYMENT**

Measurement will be made by the each constructed as specified. Payment for FOUNDATIONS for each type will be made in accordance with the schedule set forth below at the appropriate Contract unit bid price for each separate item of work, which shall, in each instance, be compensation in full for the costs incidental thereto, including but not limited to internal conduits and conductors, sidewalks, grounding, grouting around conduits, and all materials, equipment, and labor required to complete the work as specified, to the satisfaction of the Engineer.

Item No.	Description	Unit
2550.511	___ ___ ___ Foundation ___	each

SZ-24 (2550) HANDHOLES

Handholes shall be in accordance with the Mn/DOT 2565.3, other applicable Mn/DOT Standard Specifications, Mn/DOT Standard Plans/Plates, the Plans, and the following:

SZ-24.1 Modify handholes to accommodate existing conduit per plan.

SZ-24.2 Handhole covers and cover ring assemblies shall meet UL Tier 10 loading requirements.

SZ-24.3 Handholes shall be 1067 mm (42 inches) deep and 610 mm (24 inches) in diameter.

SZ-24.4 Handholes shall have three equally spaced 9.65 mm (0.380 inch) threaded eyebolts located 229 mm (9 inches) from the top of the handhole.

SZ-24.5 Install a Mn/DOT furnished locator ball per the Plan detail in all Handholes. See **LOCATOR BALLS** on page 7.

SZ-24.6 Handholes shall be located to remain as dry as possible.

SZ-24.7 Handholes shall not be located in ditch bottoms.

SZ-24.8 Handhole alignment shall be vertical or in a near-vertical orientation.

SZ-24.9 The up-slope edge of the metal frame casting (see Standard Plate No. 8114) is located at the final grade.

SZ-24.10 Compacted fill is placed around the down-slope portion of the casting/handhole such that a slope of 1:4 or flatter is maintained to match the existing slope.

SZ-24.11 The handhole support ring, frame, and cover shall be installed prior to backfilling the handhole. This is to help the handhole remain round during the backfilling process.

SZ-24.12 **HANDHOLES**

The following provisions shall apply to Handholes:

(A) Locations shall not be subjected to vehicular loading.

(B) Place on a 300 mm (12 inch) thick layer of coarse filter aggregate per Mn/DOT 3149.2H.

(C) **Type PVC Metal Cover**

a. LLDPE frame and cover castings shall not be utilized.
b. Type PVC Handholes shall have the following characteristics:

i. Typical wall thickness of 0.75 inch

ii. An open bottom with four PVC strips attached by galvanized lag screws

SZ-24.13 **MEASUREMENT AND PAYMENT**

Measurement will be made by the each constructed as specified. Payment for HANDHOLES will be made in accordance with the schedule set forth below at the appropriate Contract unit bid price for each separate item of work, which shall, in each instance, be compensation in full for the costs of all materials, equipment, and labor required to complete the work as specified, to the satisfaction of the Engineer.

Item No.	Description	Unit
2550.512	Handhole Type ___ ___ ___	each

SZ-25 (2550) FIBEROPTIC SPLICE VAULT

This work shall consist of constructing a Fiberoptic Splice Vault, which shall be in accordance with the Mn/DOT Standard Specifications, Mn/DOT Standard Plans/Plates, the Plans, and the following:

SZ-25.1 See GROUNDING on page 8 for grounding specifications.

SZ-25.2 Install a Mn/DOT furnished fiber optic splice vault marker per the Plan detail. See **Mn/DOT FURNISHED FIBER OPTIC SPLICE VAULT MARKER** on page 7.

SZ-25.3 **COVER**

The following provisions shall apply to the Cover part of the FO Splice Vault:

(A) Provide one ferrous device to lift the Cover from the body of the FO Splice Vault for every three FO Splice Vaults. The ferrous device must be >28 inches in length.

SZ-25.4 The FO Splice Vault contains a Mn/DOT furnished locator ball installed by the Contractor. See **LOCATOR BALLS** on page 7.

SZ-25.5 Near the FO Splice Vault, the FO cables sweep up to meet the conduit entrance to the FO Splice Vault Take care not to exceed minimum bend radius.

SZ-25.6 Provide a drainage system for the FO Splice Vault (see the FO Splice Vault detail in the Plans). The Engineer must approve deviation from the drainage system shown on the FO Splice Vault detail in the Plans.

SZ-25.7 Clean FO Splice Vaults after installation and splicing of cable. All areas shall be cleaned including the flange that the Cover rests on and the bolt holes for the Cover.

SZ-25.8 FO Cables shall be coiled onto the FO coiling brackets within vaults.

SZ-25.9 **APL**

Mn/Dot approved Fiberoptic Splice Vault is listed on the following Website:

http://www.dot.state.mn.us/products/trafficmgtsystems/index.html

SZ-25.10 **MEASUREMENT AND PAYMENT**

Measurement will be made by the each constructed as specified. Payment will be made under Item 2550.514 (FIBEROPTIC SPLICE VAULT) at the Contract bid price per each, which shall be compensation in full for all costs incidental thereto, including but not limited to grounding, installing the marker, Cover, the drainage system, restoration, cleaning, and all materials and labor necessary to construct the Fiberoptic Splice Vault.

SZ-26 (2550) OUTDOOR FIBER SPLICE ENCLOSURE

This work shall consist of furnishing and installing an Outdoor Fiber Splice Enclosure, which shall be in accordance with the Mn/DOT Standard Specifications, Mn/DOT Standard Plans/Plates, the Plans, and the following:

SZ-26.1 **ENCLOSURE**

The following provisions shall apply to the Enclosure part of the Outdoor Fiber Optic Splice Enclosure:

(A) The enclosure shall have the following characteristics:

a. A temperature rating of -30 to +60 C (-22 to 140 ºF).
b. Sufficient desiccant (packaged silica) inside to reduce possible damage from moisture.
c. FO Cables are located at one end only.
d. Expands to allow for up to 8 FO cables and/or FO pigtails to enter through one end.
e. Pressurized to 20 kPa (3 psi).
f. Permits selective fiber splicing (FO cable can loop in and out with only the selected fibers cut).
g. Is compatible with the splice trays and FO cables.
h. Protects splices from damage.
i. Composed of salt corrosion resistant, compatible materials not supporting galvanic cell action.
j. Splicing can be completed without circuit disruption.
k. Provides for FO cable (trunk and pigtail) strain relief.
l. FO Cables may be inserted without exceeding the minimum bending radius.
m. Includes a grounding lug.
n. Includes two grounding posts.
o. Provides for termination of up to two trunk FO cables and armored FO pigtails.
p. Includes a cable clamp for bonding to the armor of the FO cable.
q. Provides for re-entry of future FO cable.
r. Able to accommodate the following combinations of FO cables, FO cable addition kits, and bolt adapter kits:

i. Two FO cables without a FO cable addition kit.
ii. Four FO cables with one FO cable addition kit and butt adapter bolt kit.
iii. Six FO cables with two FO cable addition kits and butt adapter bolt kit.
iv. Eight FO cables with three FO cable addition kits and butt adapter bolt kit.

(B) Non-oxidizing coating shall be applied to all connections.

SZ-26.2 Tape the FO Cables together as necessary near the Outdoor FO Splice Enclosure and throughout the slack length.

SZ-26.3 See GROUNDING on page 8 for grounding specifications.

SZ-26.4 **SPLICE TRAY**

The following provisions shall apply to the Splice Tray part of the Outdoor Fiber Optic Splice Enclosure:

(A) The splice tray shall have the following characteristics:

a. Provides for entry of individual fibers.
b. Is stackable.
c. Capable of holding 24 splices and 48 fibers.
d. FO Cables may be inserted without exceeding the minimum bending radius.

e. Accommodates splice identification on the cover.
f. Includes Polyethylene tubes to protect the fibers and ethylene vinyl acetate sleeves with stainless steel rods to protect the splices.
g. Has a manufacturer provided label on the cover for fiber identification.

(B) Splices shall be mounted on the splice chip.

(C) See LABELING on page 11 for more details.

SZ-26.5 **MOUNTING**

The following provisions shall apply to Mounting of the Outdoor Fiber Optic Splice Enclosure:

(A) Mounting the Outdoor Fiber Splice Enclosure in the splice vault requires a bracket to be constructed to fit the opening to the splice vault per plan detail. The objective of this bracket is to keep the splice enclosure off the floor of the vault. The bracket is constructed as follows:

a. The main support member is 25 mm by 38 mm variable (1 inch x 1.5 inch variable) "C" channel and may be perforated with web-centered holes. The length dimension varies with the diameter of the access cover.
b. The ends of the main support member have "Z" brackets constructed of 5 mm (3/16 inch) stainless steel 38 mm (1.5 inches) wide. The "Z" brackets rest on the vault lip for the round access cover.
c. The outdoor fiber splice enclosure is hung from the bracket assembly with 3 mm (1/8 inch) stainless steel cable.

SZ-26.6 **PRESSURE TEST**

To ensure that the outdoor fiber splice enclosure is properly sealed, the Contractor shall utilize the following test procedure:

(A) Testing shall be performed in the presence of the TMS Integrator when the Outdoor Fiber Splice Enclosure is in its final hanging position.

(B) Pressurize the enclosure to between 8 to 10 psi and wait 45 seconds. During the 45 second wait, spray soapy water around the seal to check for leaks.

(C) Recheck the pressure. The enclosure should not have lost more than 2.5 psi.

(D) If the pressure loss is not greater than 2.5 psi and no leaks were detected when soapy water was sprayed around the seal, the enclosure requires no further testing.

(E) If the pressure loss is greater than 2.5 psi or leaks were detected when soapy water was sprayed around the seal, the Contractor shall repair any leaks and retest the enclosure.

SZ-26.7 **HAS MET**

The following items have met the above specifications:

(A) Splice Case Enclosure: 3M 2178-LS.

(B) Cable Addition Kit: 3M 2181-LS.

(C) Double Butt Adapter Bolt Kit: 3M 2181-B.

(D) Triple Butt Adapter Bolt Kit: 3M 2181-C.

(E) Splice Tray: 3M 2524-FT.

SZ-26.8 **MEASUREMENT AND PAYMENT**

Measurement will be made by the each constructed as specified. Payment will be made under Item 2550.515 (OUTDOOR FIBER SPLICE ENCLOSURE) at the Contract bid price per each, which shall be compensation in full for all costs incidental thereto, including but not limited to, the enclosure, grounding, FO cable addition kits, butt adapter bolt kits, hanger hardware, splice tray, mounting, pressure testing, and all materials and labor necessary to construct the Outdoor Fiber Splice Enclosure.

SZ-27 (2550) BURIED CABLE SIGN

This work shall consist of constructing a Buried Cable Sign, which shall be in accordance with the Mn/DOT Standard Specifications, Mn/DOT Standard Plans/Plates, the Plans, and the following:

SZ-27.1 Mn/DOT 3973 shall be modified by substituting the word orange for the word yellow.

SZ-27.2 The Contractor shall mark all fiber-route changes in direction (see Plan Detail) within seven days of FO cable installation.

SZ-27.3 Install the sign bottoms at 1.2 m (4 ft) above ground.

SZ-27.4 Install the signpost three feet offset from the cable trench between the cable and the Right-of-way.

SZ-27.5 Install an orange-colored plastic resin sheath to enhance the visibility of buried cable signposts. The plastic resin sheath is: Triangular in shape, having a wall thickness of 2.03 ±0.25 mm (0.08 ±0.01 inches) with a 84.07 ±0.51 mm (3.31 ±0.02 inch width of each side; Temperature stable from -40 °C (-40 ° F) to 65 °C (150 °F), UV resistant; Made of Polypropylene; Installed on the above ground portion of each post below the bottom of the sign.

SZ-27.6 **BURIED CABLE WARNING SIGNS**

The buried cable signs comply with 3973 and the following modifications/supplements:

(A) The telephone number for the sign legend is 811.

(B) The sign shall be installed on 2.1 m (7 feet) X 3.0 kg/m (2 lb/ft), galvanized, steel posts, spaced 150 m (500 ft) apart along the FO cable (trunk cables and armored pigtails) route.

SZ-27.7 **HAS MET**

The following items have met the above specifications:

(A) Resin Sheath: REPNET Rhino TVF48-O by REPNET Inc.

SZ-27.8 **MEASUREMENT AND PAYMENT**

Measurement will be made by the each constructed as specified. Payment will be made under Item 2550.516 (BURIED CABLE SIGN) at the Contract bid price per each, which shall be compensation in full for all costs incidental thereto, including but not limited to installation, the resin sheath, the post, mounting, removing existing signs over abandoned cable, and all materials and labor necessary to construct the Buried Cable Sign.

SZ-28 (2550) NON-METALLIC CONDUIT

This work shall consist of furnishing and installing Non-Metallic Conduit, which shall be UL listed and in accordance with the Mn/DOT Standard Specifications, Mn/DOT Standard Plans/Plates, the Plans, and the following:

SZ-28.1 The requirement for Red-colored conduit in Mn/DOT 3803 does not apply.

SZ-28.2 Industry standard couplings shall be used.

SZ-28.3 If adhesives and solvents are used they shall be compatible with the materials to be adhered.

SZ-28.4 The Contractor shall connect to existing conduit utilizing standard couplings. Prepare existing conduit for coupling as indicated in the Plans.

SZ-28.5 All conduit under roads shall be placed a minimum of 60 inches below finished grade and shall be continuous without joints.

SZ-28.6 All conduit used for FO cable shall be placed a minimum of 0.9 m (36 inches) below the finished grade.

SZ-28.7 Non-metallic conduit shall be PVC or HDPE and shall be Schedule 40, with the exception of conduit under roadway surfaces. Conduit under roadway surfaces shall be heavy-wall rigid PVC or HDPE and shall be Schedule 80.

SZ-28.8 Standard bell ends shall be installed on all NMC ends to prevent damage to cables during installation.

SZ-28.9 80 mm (3.15 inch) wide, stretchable, orange warning tape shall be installed between 460 mm (18 inch) and 300 mm (12 inch) below the surface over all NMC bearing communication cable (including FO cable). The tape shall bare the following permanent legend: **CAUTION: Mn/DOT CABLE BELOW**.

SZ-28.10 **NMC FOR BLOWN FO CABLE**
The following provisions shall apply to Non-Metallic conduit for Blown FO Cable:

(A) The NMC shall have the following material characteristics:

a. The NMC shall be 38 mm (1.5 inch) diameter.

b. The minimum pressure rating for the 38 mm (1.5-inch) NMC and couplings shall be 900-kPa (130-psi).

(B) The conduit shall be continuous flexible duct and direct buried. Plowed duct is preferred over trenched duct.

(C) Open trench installations of NMC for Blown FO Cable shall be are backfilled with granular material to 150 mm (six inches) over the top of conduit elevation.

SZ-28.11 **MEASUREMENT AND PAYMENT**
Measurement will be made by the length of NMC furnished and installed as specified. Payment for NON-METALLIC CONDUIT will be made in accordance with the schedule set forth below at the appropriate Contract unit bid price for each separate item of work, which shall, in each instance, be compensation in full for the costs of all materials, equipment, and labor required to complete the work as specified, to the satisfaction of the Engineer.

Item No.	Description	Unit
2550.523	___ mm (__") Non-Metallic Conduit	meter (**linear foot**)

SZ-29 (2550) POWER AND CONTROL CABLES

This work shall consist of furnishing and installing Power and Control Cables, which shall be in accordance with the Mn/DOT Standard Specifications, Mn/DOT Standard Plans/Plates, the Plans, and the following:

SZ-29.1 All Power and Control Cables shall be UL listed.

SZ-29.2 Terminate Power and Control cables unless otherwise directed by the Plans.

SZ-29.3 See GROUNDING on page 8 for grounding details.

SZ-29.4 Some power cables may require protection within handholes as denoted in the Plan. The Contractor shall protect these power cables by enclosing them in 2 inch diameter split conduit within the handhole. The split conduit shall be colored red.

SZ-29.5 **POWER CABLE 3 CONDUCTOR NO 8**
The following provisions shall apply to Power Cable 3 Conductor No 8:

(A) The Power Cable 3 Conductor No. 8 cable is rated at 600 volt and has cross-linked thermo set XLPE insulated circuit conductors with an overall PVC jacket.

(B) The cable has the following additional characteristics:

a. Seven strand, soft drawn, bare copper conductors.
b. The average thickness of the PE insulation 45 mils.

(C) The No. 10 ground conductor if supplied is also seven strand, soft drawn bare copper; **this conductor shall not be used;**

(D) The circuit and ground conductors within the cable shall be cabled with non-hygroscopic fillers and wrapped with Mylar binding tape.

(E) Conductor insulation color codes shall be identifiable by either Method 1 E-1 (insulation is colored "Black, White, Red, and bare ground") or Method 3 E-1 (surface printing of number and color designations, e.g. "1-Black, 2-White, 3-Red, and bare ground") of NEMA WC 57-1990, ICEA S-73-532.

(F) The jacket is heat, moisture, and sunlight resistant black PVC meeting ICEA S-95-658 with an average thickness of 60 mils.

(G) The jacket shall have printed information including the number of conductors, the gauge of the conductors, conductor insulation type, and voltage rating.

MEASUREMENT AND PAYMENT

Measurement will be made by the length of Power and Control Cables furnished and installed as specified. Payment for POWER AND CONTROL CABLES will be made in accordance with the schedule set forth below at the appropriate Contract unit bid price for each separate item of work, which shall, in each instance, be compensation in full for the costs incidental thereto including but not limited to Termination, Grounding, Power Cable 3 Conductor No 8, and all materials, equipment, and labor required to complete the work as specified, to the satisfaction of the Engineer.

Item No.	Description	Unit
2550.532	Power Cable ___ Conductor No. ___	meter (**linear foot**)

SZ-30 (2550) TELEPHONE/COMMUNICATION/VIDEO CABLE

This work shall consist of furnishing and installing Telephone/Communication/Video Cable, which shall be in accordance with the Mn/DOT Standard Specifications, Mn/DOT Standard Plans/Plates, the Plans, and the following:

SZ-30.1 Furnish Install, Terminate, and Splice Telephone/Communication/Video Cable according to Plan.

SZ-30.2 All Cables shall be UL listed.

SZ-30.3 See GROUNDING on page 8 for grounding details.

SZ-30.4 See LABELING on page 11 for labeling details.

SZ-30.5 Three meters (10 feet) of coiled slack cable shall be provided in any ground control cabinet and 12 meters (39 feet) in any DMS cabinet.

SZ-30.6 **CAT 6 CABLE**
The following provisions shall apply to Cat 6 Cable:

(A) Cat 6 Cable for DMS shall be pulled between the ground control cabinet and the sign cabinet by the Contractor. The cable is terminated by others.

SZ-30.7 **APL**
following Website:

http://www.dot.state.mn.us/products/trafficmgtsystems/index.html

SZ-30.8 **MEASUREMENT AND PAYMENT**
Measurement will be made by the length of Telephone/communication/Video Cable furnished and installed complete in place as specified. Payment for TELEPHONE/COMMUNICATION/VIDEO CABLE will be made in accordance with the schedule set forth below at the appropriate Contract unit bid price for each separate item of work, which shall, in each instance, be compensation in full for the costs incidental thereto including but not limited to, Cat 6 Cable, and all materials, equipment, and labor required to complete the work as specified, to the satisfaction of the Engineer.

Item No.	Description	Unit
2550.533	___ Cable___	meter (**linear foot**)

SZ-31 (2550) INSTALL CABINET

This work shall consist of installing the cabinet, internal and external components. The Install Cabinet shall be previously salvaged from this project. Any damage to the installed materials resulting from the removing, salvaging and delivering operation shall be repaired or replaced at the Contractor's expense.

Install Cabinet shall be shall be in accordance with Mn/DOT Standard Specifications, Mn/DOT Standard Plans/Plates, the Plans, and the following:

SZ-31.1 Ground Mounted Control Cabinet and Service Cabinet salvaged from the project shall be installed.

GROUND MOUNTED CONTROL CABINET

(A) See GROUNDING on page 8 for grounding specifications.

(B) Conductors internal to the foundation shall be constructed per Plan.

(C) Install salvaged neoprene gasket between the cabinet and the foundation. The Contractor shall furnish a new one piece, dense neoprene gasket if the salvaged gasket does not provide a watertight seal.

(D) Existing Cabinets shall remain active during the weekday peak periods of 6:00 a.m. to 9:00 a.m. and 3:00 p.m. to 7:00 p.m or as approved by the Engineer.

(E) Cabinets shall be secured to the foundation by utilizing 103 mm (4 inch) long, 10 mm (3/8 inch) diameter, Stainless Steel Quick Bolts (wedge bolts).

(F) Provide rodent control poison packets for all Cabinets.

SERVICE CABINET

(A) See GROUNDING on page 8 for grounding specifications.

(B) Conductors internal to the foundation shall be constructed per Plan.

(C) Existing Service Cabinet shall remain active during the weekday peak periods of 6:00 a.m. to 9:00 a.m. and 3:00 p.m. to 7:00 p.m.

(D) Service Cabinet shall be secured to the foundation by utilizing 103 mm (4 inch) long, 10 mm (3/8 inch) diameter, Stainless Steel Quick Bolts (wedge bolts).

(E) The Service Cabinet circuit breaker sizes and quantities shall be defined in the Plan details.

(F) Notify Mn/DOT Business Services Section when Mn/DOT is to assume ownership of the proposed source of power. Following is the contact information:

Audrey Frank (651) 234-7441
Metro Accounts Payable-Mn/DOT Mailstop 050
Waters Edge Building
1500 County Road B2
Roseville MN 55113

SZ-31.2 **MEASUREMENT AND PAYMENT**

Measurement will be made by the each constructed as specified. Payment for INSTALL CABINET for each type will be made in accordance with the schedule set forth below at the appropriate Contract unit bid price for each separate item of work, which shall, in each instance, be compensation in full for the costs incidental thereto, including but not limited to Ground Mounted Control Cabinet (conductors internal to the foundation, neoprene gasket, mounting on a foundation, rodent control packets, removing and installing 334 racks, grouting around conduits, grounding), Service Cabinet (conductors internal to the foundation, mounting on a foundation, grounding, breakers), and all materials, equipment, and labor required to complete the work as specified, to the satisfaction of the Engineer.

Item No.	Description	Unit
2550.571	Install ___ Cabinet	each

SZ-32 (2550) TEMPORARY COMMUNICATION SYSTEM

This work shall consist of furnishing and installing Temporary Communication System. The Temporary Communication System shall be constructed to maintain existing Trunk FO Cable Communications during project construction and shall be in accordance with the Mn/DOT Standard Specifications, Mn/DOT Standard Plans/Plates, the Plans, and the following:

SZ-32.1 Notify the TMS Integrator by TMS construction phone number (651) 331-8370, a minimum of 48 hours before beginning any interruption in Trunk Fiber Communications.

SZ-32.2 All construction shall meet all National Electric Code (NEC) and National Electric Safety Code (NESC) requirements.

SZ-32.3 Roadside Hazard Protection shall be provided as required by the Mn/DOT Road Design Manual.

SZ-32.4 A Temporary FO Link shall be defined as "any fiber with a connector at one end originating in a cabinet, TMS shelter cabinet, or building; and the other end with a connector in another location within a cabinet, TMS shelter cabinet, or building". This does not include FO Pigtail Cables located within the project limits that are impacted by the project roadway construction.

The Contractor shall be required to provide FO Cable Schematics depicting the impact of the Temporary Communication System to the existing FO Trunk Cables and Temporary FO Links. The FO Cable Schematics shall be submitted to Mn/DOT in a pdf format similar to the FO Cable Schematics shown in the Plan. Additionally, the FO Cable Schematics shall include all fibers from each location where FO splices are made to construct the Temporary Communication System.

SZ-32.5 Wireless Communication components shall not be allowed unless approved by the Engineer.

SZ-32.6 Protection shall be provided for components from voltage surges entering thru power or communication cabling. See GROUNDING on page 8 for Grounding requirements.

SZ-32.7 The Contractor shall be responsible for maintaining, troubleshooting, and repairing the Temporary Communication system until the permanent proposed TMS is constructed and able to be utilized.

SZ-32.8 The Contractor shall provide Mn/DOT Plans for Approval. Mn/DOT will respond with comments or approval within 7 Calendar days.

SZ-32.9 **MEASUREMENT AND PAYMENT**

No measurement will be made of the various Items that constitute Temporary Communication System but all such work will be construed to be included in the single Lump Sum payment under Item 2550.601 (TEMPORARY COMMUNICATION SYSTEM), which shall be compensation in full for all costs incidental thereto, including but not limited to maintaining all existing Trunk FO Communication for the duration of the project, and all materials and labor necessary to construct the Temporary Communication System.

SZ-33 (2550) FIBER OPTIC CABLE TESTING

This work shall consist of Fiber Optic Cable Testing, which shall be in accordance with the Mn/DOT Standard Specifications, Mn/DOT Standard Plans/Plates, the Plans, and the following:

SZ-33.1 A FO Link shall be defined as "any fiber with a connector at one end originating in a cabinet, TMS shelter cabinet, or building; and the other end with a connector in another location within a cabinet, TMS shelter cabinet, or building".

SZ-33.2 The Contractor shall arrange a meeting with the Project Engineer and the TMS Integrator to discuss the proposed FO Cable Testing plan. This meeting shall occur prior to any testing. Testing personnel, including the people that will be performing the field testing shall be required to attend the meeting.
The meeting may be waived if approved by the Engineer. The meeting may be waived if the Testing personnel have historically demonstrated their ability to conform to Mn/DOT FO Cable Testing requirements.

SZ-33.3 The Contractor shall notify the Engineer and TMS System Integrator prior to FO system testing. The Engineer, or a representative, may observe each test. All test documentation shall be provided electronically.

SZ-33.4 The Contractor shall use an OTDR and Power Meter with current calibration certificates to perform the FO Cable testing required. Test equipment calibration information and certification documentation shall be submitted as part of the Project Documentation Package (with test results).

SZ-33.5 The calibration certificate shall be dated no more than one year prior to the last dates of FO cable testing.

SZ-33.6 Problems encountered with existing cable plant hardware shall be brought to the attention of the TMS System Integrator before testing is completed. The Contractor shall notify the TMS Integrator by email within two days of noticing the problem.

SZ-33.7 FO Cable Testing shall be rejected if calibration certificates are out of date.

SZ-33.8 **OPTICAL TIME DOMAIN REFLECTOMETER "OTDR" TESTING**
The following provisions shall apply to OTDR Testing:

(A) The OTDR shall comply with the latest revision for the Bellcore/Telcordia Document GR-196-CORE "Generic Requirements for OTDR-Type Equipment" and SR-4731 "OTDR Data Format." In addition, the OTDR performance requirements shall comply with the following:

a. The event dead zone shall be less than or equal to three meters.
b. The attenuation dead zone is less than or equal to 5 meters.
c. Has a dynamic range of 25 dB or greater.

(B) **OTDR Test files**

a. The Contractor uses Mn/DOT's file naming convention for test files. See **FO CABLE TEST DOCUMENTATION** on page 34 for file naming convention example.
b. The test files must include the actual date of testing and the "Index of refraction" for the FO cable as recorded on the cable spool by the manufacturer or for existing FO cable, the Index of Refraction that was utilized.
c. The test files must be stored under a directory named by the highway number.

(C) Test FO Links bi-directionally per EIA/TIA 455-59, FOTP-59, except as otherwise noted. Use a 500 m (1650 foot) patch cord as a launch cable when testing.

(D) Measure and record each FO Signature for the completed SM FO Link at 1550 nm or 1300 nm for MM. (See FO Schematics Plan Sheets).

(E) Test each FO Link. Each fusion splice shall be tested in the forward and backward directions, recorded, and denoted by FO Splice Vault location. All events which indicate a loss greater than or equal to 0.01 dB, within the FO Signature shall be recorded as "Event Notes" describing the corresponding vault location. Event Notes are not required for splices indicating loss less than 0.01 dB. The Contractor shall provide an explanation for all events that do not align with a vault.

(F) The average loss through a fusion splice, when measured at wavelengths of 1550 nm for SM and 1300 nm for MM, is no more than 0.15 dB. The average shall be calculated by adding the bi-directional testing values and dividing by 2.

(G) Each FO Link shall be tested after splices are sealed within their enclosure or panel. Should any FO Link fail, re-splice that FO Link and retest all FO Links within the enclosure or panel. The Contractor will be allowed a maximum of three splice attempts to achieve passing results.

SZ-33.9 **POWER METER TESTING**
The following provisions shall apply to Power Meter Testing of FO Links:

(A) The Contractor shall use a light source and power meter conforming to EIA/TIA 455-171, FOTP-171, and OFSTP-14, except as otherwise noted, to bi-directionally test the cable plant.

(B) Measure and record each directional value for the completed SM optical link at 1550 nm or 1300 nm for MM. (See FO Schematics Plan Sheets).

(C) Power meter measurements shall be in dB.

a. Measurements for SM links shall not exceed the result of the following formula:

0.4*[Link length of FO Cable in kilometers]+1

b. Measurements for MM links shall not exceed the result of the following formula:

[Link length of FO Cable in kilometers]+1

(D) The Contractor shall correct out of range measurements on the furnished and installed FO Links. If after performing corrective action an acceptable measurement has not been achieved, the Contractor shall notify the TMS Integrator.

SZ-33.10 **FO CABLE TEST DOCUMENTATION**

The objective of FO Cable Test Documentation is to document OTDR and Power Meter test results to verify that these results meet specifications, as well as to document the FO Link loss, FO cable distance between splices and terminations, and the fusion splice losses. A TMS System Integrator representative will review this documentation for approval and the following provisions shall apply to FO Cable Test Documentation:

(A) The Contractor shall provide post installation documentation on a CD.

a. The Contractor shall use the "Fiber Optic Schematic" Plan sheets as a template for recording power meter and OTDR test data, fiber count, and fiber routing of the cable and cable run.
b. Measurements recorded on copies of FO schematics shall be stored as PDF formatted files. The Engineer will supply the Contractor with a PDF if the Contactor requests one. The text font shall be typed and legible as determined by the Mn/DOT representative reviewing the measurements. If measurements are not determined legible then the measurements shall be repeated and recorded again.
c. If resplicing is required to achieve passing test results, those OTDR files shall be stored in a separate folder on the CD.

(B) Measure and record the following values for all FO cables:

a. FO cable length markings at all splice and termination locations on the FO schematics.
b. Fiber distances derived from OTDR testing and the FO Index of Refraction (usually included on FO cable spool documentation) shall be shown on the FIBER OPTIC SCHEMATICS in the Plan. For existing FO cable, provide the Index of Refraction utilized.
c. Attenuation of each FO Link in each direction measured.
d. Event notes for each splice indicating loss greater than or equal to 0.01dB. These notes shall identify each splice location and shall be consistent with each FO schematic vault location. The Contractor shall provide an explanation for all events that do not align with a vault.
e. Signatures of the FO cable span and events using Mn/DOT file naming convention. See below in this section for file naming convention example.
f. Attenuation of each FO link, in both directions, as measured with a light source and power meter at 1550 nm wavelength for SM and 1300 nm wavelength for MM.

g. The Contractor shall provide Fiber Optic Schematics indicating power meter and splice loss results, power meter test reports, and OTDR trace files on the Mn/DOT provided FO Schematics on the Contractor provided CD.

(C) Naming OTDR files is done as follows:

a. The FO trunk cable ID and FO Pigtail cable ID numbers are derived from the FO Schematic plan sheets.
b. The OTDR file name is developed from left to right in the following order:

i. FO cable launch point (trunk or pigtail FO cables).
ii. North, South, East, or West (N, S, E, or W) designation shall be added after the FO Trunk ID or FO Pigtail ID; this is the direction of the optical test pulse traveling from the OTDR launch point along the majority of cable under test. This will not always be the direction the cable leaves the OTDR launch point.
iii. FO cable type (S=Single Mode, M=Multimode) and strand count.
iv. Filename extension (data format) proceeded by a period.

Fiber Optic OTDR File Naming Convention

LAUNCH DIRECTION

┌------ CABLE I.D --------┐│┌ FIBER ┐┌EXT┐

C A B 6 9 4 – 50 . 47 W S 0 4 . s o r

CABLE I.D. = Trunk or pigtail FO cable I.D. number as shown on the plan schematics. Number of characters may vary.
.
LAUNCH DIRECTION = Direction in which the OTDR is launching (N, S, E or W). This is the direction of the optical test pulse traveling from the OTDR launch point along the majority of cable under test. This will not always be the direction the cable leaves the OTDR launch point.

FIBER = Fiber Type, (S= Single mode), (M= Multimode) and Fiber Number (example: 01...04...08...48...76...100...144). Number of characters may vary.

EXT = Telcordia universal data file format (.sor)

The OTDR file **"Fiber Notes"** field includes the State Project Number and the origin of the test launch (i.e. the complete name of the building, TMS Shelter Cabinet, cabinet, camera, or temporary termination point).

SZ-33.11 **MEASUREMENT AND PAYMENT**

No measurement will be made of the various Items that constitute Fiber Optic Cable Testing but all such work will be construed to be included in the single Lump Sum payment under Item 2550.601 (FIBER OPTIC CABLE TESTING).

SZ-34 (2550) FIBER OPTIC PIGTAIL TERMINATION

This work shall consist of Fiber Optic Pigtail Termination, which shall be in accordance with the Mn/DOT Standard Specifications, Mn/DOT Standard Plans/Plates, the Plans, and the following:

SZ-34.1 The Contractor shall utilize the field termination method.

SZ-34.2 **INDOOR PIGTAILS**

The following provisions shall apply to the Indoor Pigtails for FO Pigtail Termination:

(A) The Contractor shall not use existing Indoor Pigtails.

(B) Indoor Pigtails consisting of 6 individual fibers bundled into a single sheath are required for field splicing method of terminating Armored FO Pigtails and Trunk FO Cable.

(C) Minimum lengths shall be two meters in a Cabinet and five meters in a FDF.

(D) Complies with Corning SMF-28 for optical fiber.

(E) The connector return loss shall be greater than or equal to 57dB.

(F) SM Indoor Pigtail jackets shall be yellow and MM Indoor Pigtail jackets shall be orange.

(G) Thickness of secondary buffer shall be 250 μm to 900 μm thickness.

(H) Individually constructed.

(I) FC-PC Fiber Connectors shall be utilized for SM.

(J) Boots shall be secured to the jacket with a pliable adhesive.

(K) Land connectors on Patch Panel Bulkhead Adapters

SZ-34.3 **FIBER BULKHEAD ADAPTERS**

The following provisions shall apply to the SM FC-PC and MM ST Fiber Bulkhead Adapters for Pigtail Termination:

(A) The Fiber Bulkhead Adapters shall include the following features:

a. One-piece construction.
b. Metallic bodies.
c. Zirconia ceramic sleeves.

SZ-34.4 **HAS MET**

The following items have met the above specifications:

(A) FC Fiber Bulkhead Adapters: ADC/FL2-6PSMFC-Z.

(B) 6 Fiber FC SM Indoor Pigtails with FC Fiber Bulkhead Adapters: ADC/FL2-6PLSC605R.

SZ-34.5 **MEASUREMENT AND PAYMENT**

Measurement will be made by each end of the FO cable terminated in the cabinet splice/patch panel constructed as specified. Payment will be made under Item 2550.602 (FIBER OPTIC PIGTAIL TERMINATION) at the Contract bid price per each, which shall be compensation in full for all costs incidental thereto, including but not limited to Indoor Pigtails, Fiber Bulkhead Adapters, FO Cable splicing, and all materials and labor necessary to construct the Fiber Optic Pigtail Termination.

SZ-35 (2550) FIBER OPTIC CABLE SPLICING

This work shall consist of Fiber Optic Cable Splicing, which shall be in accordance with the Mn/DOT Standard Specifications, Mn/DOT Standard Plans/Plates, the Plans, and the following:

SZ-35.1 Fusion type splices shall be utilized. Mechanical splices shall be prohibited.

SZ-35.2 FO Cable Splicing shall be allowed in locations denoted in the Plan. Additional locations shall require the approval of the Engineer and TMS Integrator.

SZ-35.3 FO Cable Splicing locations shall be within cabinets and splice vaults.

SZ-35.4 The Contractor shall adhere to the FO cable manufacturer's methods, recommendations, materials, and techniques for splicing. All splicing equipment shall be in good working order, properly calibrated, and meet all industry standards and safety regulations.

SZ-35.5 The FO cable preparation, splice enclosure installation, and splicing shall be accomplished in accordance with industry standards. Mechanical stress and splicing locations shall be minimized by training the FO cable into final position, concurrently observing the minimum bending radii of the FO cable. The minimum bending radii of the FO cable shall be 20 times the diameter of the cable or as per the manufacturer's requirements, whichever is greater.

SZ-35.6 Cleanliness and freedom from contamination shall be strictly observed with respect to splicing materials and joint construction. Upon completion of the splicing operation, all waste material shall be deposited in suitable containers, removed from the job site, and disposed of in an environmentally acceptable manner.

SZ-35.7 **EXISTING OR INSTALLED OUTDOOR FIBER SPLICE ENCLOSURE**

The following provisions shall apply when the Contractor is required to enter an Existing Outdoor Fiber Splice Enclosure for FO Cable Splicing:

(A) **Testing**

a. The Contractor shall be responsible for all existing and proposed splices within an Existing Outdoor Fiber Splice Enclosure.
b. The Contractor may choose to pretest the existing splices within the Existing Outdoor Fiber Splice Enclosure to determine if they do not meet passing criteria. See (2550) FIBER OPTIC CABLE TESTING on page 32.
c. If pretesting indicates existing splices do not meet passing criteria, with the approval of the Engineer the Contractor shall not be responsible for those existing splices.

(B) **Adjustments**

a. The Contractor shall make adjustments to the size of Existing Outdoor Fiber Splice Enclosures to accommodate additional cables. The contractor shall utilize cable addition kits, butt adapter bolt kits, and splice trays as required to complete the installation.

(C) **Grounding**

a. See GROUNDING on page 8 for grounding specifications.

(D) **Pressure Test**

a. When FO Cable Splices are to be placed within an existing Outdoor Fiber Splice Enclosure, the Contractor shall ensure that the Outdoor Fiber Splice Enclosure is properly sealed after placement. The Contractor shall utilize the following test procedure:

i. Testing shall be performed in the presence of the TMS Integrator when the Outdoor Fiber Splice Enclosure is in its final hanging position.
ii. Pressurize the enclosure to between 8 to 10 psi and wait 45 seconds. During the 45 second wait, spray soapy water around the seal to check for leaks.
iii. Recheck the pressure. The enclosure should not have lost more than 2.5 psi.
iv. If the pressure loss is not greater than 2.5 psi and no leaks were detected when soapy water was sprayed around the seal, the enclosure requires no further testing.

v. If the pressure loss is greater than 2.5 psi or leaks were detected when soapy water was sprayed around the seal, the Contractor shall repair any leaks and retest the enclosure.

SZ-35.8 **HAS MET**

The following items have met the above specifications:

(A) FC Fiber Bulkhead Adapters: ADC/FL2-6PSMFC-Z.

(B) 6 Fiber FC SM Indoor Pigtails with FC Fiber Bulkhead Adapters: ADC/FL2-6PLSC605R.

(C) Cable Addition Kit: 3M 2181-LS.

(D) Double Butt Adapter Bolt Kit: 3M 2181-B.

(E) Triple Butt Adapter Bolt Kit: 3M 2181-C.

(F) Splice Tray: 3M 2524-FT.

SZ-35.9 **MEASUREMENT AND PAYMENT**

Measurement will be made by the each constructed as specified per location. Payment will be made under Item 2550.602 (FIBER OPTIC CABLE SPLICING) at the Contract bid price per each, which shall be compensation in full for all costs incidental thereto, including but not limited to, Existing or Installed Outdoor FO Splice Enclosure, and all materials and labor necessary to construct the Fiber Optic Cable Splicing.

SZ-36 (2550) INSTALL DMS, POST MOUNTED

This work shall consist of Install DMS and Support Structure, which shall be in accordance with the Mn/DOT Standard Specifications, Mn/DOT Standard Plans/Plates, the Plans, and the following:

SZ-36.1 Installed DMS and Support Structure shall be previously salvaged from this project.

SZ-36.2 See GROUNDING on page 8 for grounding specifications.

SZ-36.3 **INSTALLATION REQUIREMENTS**

The following provisions shall apply to the Installation Requirements for Install Dynamic Message Sign:

(A) Install the salvaged Support Structure.

(B) Mount the salvaged DMS to the support structure.

(C) The Contractor shall furnish and install power and communication cable conduits on the support structure.

(D) The Contractor shall install power and communication cables between the DMS and the DMS Control cabinet. The Contractor shall utilize existing power and data cable conduit openings or cut openings as directed by the Engineer. Duct-seal shall be installed in DMS Control cabinet openings.

(E) Install three meters (10 feet) of slack communications cable coiled in the DMS Control cabinet and 12 meters (39 feet) in the DMS. Power cables shall be terminated in the DMS and DMS control cabinet. Communication cables will be terminated by the TMS Integrator.

a. Notify the TMS Integrator by TMS construction phone number (651) 331-8370, a minimum of 48 hours before completing termination of the Power cables.

SZ-36.4 **MEASUREMENT AND PAYMENT**

Measurement will be made by the each constructed as specified. Payment for INSTALL DMS for each type will be made in accordance with the schedule set forth below at the appropriate Contract unit bid price for each separate item of work, which shall, in each instance, be compensation in full for the costs incidental thereto, including but not limited to installation of the Salvaged Support Structure, Grounding, Installation Requirements, and all materials, equipment, and labor required to complete the work as specified, to the satisfaction of the Engineer.

Item No.	Description	Unit
2550.602	Install DMS ___ ___	each

SZ-37 (2550) INSTALL FIBER OPTIC VAULT

This work shall consist of installing the FO Vault, internal and external components. The Install FO Vault shall be previously salvaged from this project. Any damage to the installed materials resulting from the removing, salvaging and delivering operation shall be repaired or replaced at the Contractor's expense. This work shall consist of Install Fiber Optic Vault, which shall be in accordance with the Mn/DOT Standard Specifications, Mn/DOT Standard Plans/Plates, the Plans, and the following:

SZ-37.1 FO Vaults salvaged from this project shall be installed in another location.

SZ-37.2 See GROUNDING on page 8 for grounding specifications.

SZ-37.3 The FO Vault contains a Mn/DOT furnished locator ball installed by the Contractor.

SZ-37.4 Near the FO Vault, the FO cables sweep up to meet the conduit entrance to the FO Vault Take care not to exceed minimum bend radius.

SZ-37.5 Provide a drainage system for the FO Vault (see the FO Splice Vault detail in the Plans). The Engineer must approve deviation from the drainage system shown on the FO Splice Vault detail in the Plans.

SZ-37.6 Clean FO Vaults after installation and splicing of cable. All areas shall be cleaned including the flange that the Cover rests on and the bolt holes for the Cover.

SZ-37.7 FO Cables shall be coiled onto the FO coiling brackets within FO vaults.

SZ-37.8 **MEASUREMENT AND PAYMENT**

Measurement will be made by the each constructed as specified. Payment will be made under Item 2550.602 (INSTALL FIBER OPTIC VAULT) at the Contract bid price per each, which shall be compensation in full for all costs incidental thereto, including but not limited to grounding, installing the salvaged Outdoor FO Splice Enclosure, installing the marker, the drainage system, restoration, cleaning, and all materials and labor necessary to complete Install Fiber Optic Vault.

SZ-38 (2550) REROUTE CABLE

This work shall consist of Reroute Cable, which shall be in accordance with the Mn/DOT Standard Specifications, Mn/DOT Standard Plans/Plates, the Plans, and the following:

SZ-38.1 The Contractor shall utilize a vacuum excavator for exposing all cables and conduit that require excavation for rerouting. Hand digging will only be allowed as specified in the plan. .

SZ-38.2 Disconnect and terminate cables unless otherwise directed by the Plans.

SZ-38.3 Pull back cables prior to rerouting as directed by the Plan.

SZ-38.4 Existing conduit and cables shall be removed to adjust to the proposed design.

SZ-38.5 Protect cable to ensure it is not damaged when exposed. The Contractor shall be responsible for any damage incurred during the Reroute Cable operation.

SZ-38.6 See GROUNDING on page 8 for Grounding requirements.

SZ-38.7 See LABELING on page 11 for Labeling requirements.

SZ-38.8 **FO CABLE INSTALLATION REQUIREMENTS**

The Installation Requirements for FO Cable shall comply with Mn/DOT 2550.3 and the following provisions:

(A) Additional lengths FO Cable shall be stored in end-equipment cabinets (e.g. CCTV Control Cabinet, Ground Mounted Control Cabinets), FO Patching Shelters, and TMS Shelter Cabinets.

(B) The following lengths of outer jacket and armor shall be removed beyond the 2.4 to 4.6 m (8 to 15 feet) necessary for fiber management in the splice enclosure:

a. Remove 15 m (50 ft) of the outer jacket of cable terminating in a TMS Shelter Cabinet.

(C) For lengths of FO Cable over 600 feet the Contractor shall employ the Air Assisted method for installation.

(D) Expected tension on the FO Cable and pulling tape shall be calculated prior to installing the FO Cable in conduit runs. The pulling force shall be distributed between the inner strength member and the aramid fibers by securing both to the main pulling device.

(E) A “break-away” type pulling attachment shall be utilized to protect against over stressing the FO Cable. A cable grip that pulls only on the outer jacket to pull FO Cable shall not be allowed.

(F) Damage to the FO Cable from any source or exceeding the manufacturer’s recommended tensile strength limits or cable-bending radius is cause for the cables to be rejected. The Contractor shall ensure a minimum bend radius of 250 mm (10 inches) during installation (loaded cable) and minimum bend radius of 200 mm (8 inches) after installation (static cable).

(G) Often, FO Cable is pulled through conduit/handhole networks. Using the 610 mm (24 inch) diameter handholes as a fiber pull box, is likely to exceed the minimum loaded bend radius and cause damage to the cable fibers. The Contractor shall not use the handhole as a fiber pull box.

(H) Slack FO cable shall be provided for FO cables spliced within vaults. Provide twenty one meters (seventy feet) of slack FO Cable coiled in these vaults per each vault entrance/exit.

(I) **Air Assisted FO Cable**

a. Long radius bends shall be utilized in equipment foundations and other situations requiring the negotiation of sharp angles.
b. The duct system shall be properly installed utilizing pressure tight splices.

i. Seal one end of the duct and pressurize the duct utilizing a sealed blowing machine.
ii. The duct shall maintain 897 kPa (130 psi) without realizing significant pressure loss
iii. Use care near pressurized ducts.

c. High air speed blowing shall require the front end of the FO Cable to be endcapped to prevent the cable from getting hung up in the duct.
d. Utilize proper air seals to fit the OD of the FO Cable.
e. Provide proof that the duct is properly spliced and not crushed by blowing a hard mandrel through the duct.
f. Clean and dry the duct utilizing the following procedures

   i. Blow a tight fitting foam carrier through the duct at high pressure. The foam shall travel at approximately 30 mps (100 fps).
   ii. If excess water and/or dirt is expelled from the duct, repeat the process until minimal water and/or dirt is observed.
   iii. Dry the duct with airflow.

g. For high speed air machines (no missile), inject the recommended amount of approved lubricant and spread it with a foam carrier. For piston type machines, inject the majority of the lubricant in front of the missile with some placed behind the missile.

h. For push/pull machines, attach the piston to the FO Cable and insert the piston into the duct.

i. For high air speed machines, hand push approximately 30 meters (100 feet) of FO Cable into the duct prior to activating the machine.

j. Use caution in bringing up the air and hydraulic pressure.

SZ-38.9 **MEASUREMENT AND PAYMENT**

Measurement will be made by the affected length of Cable Rerouted as specified. If groups of cable pulled to the same location are designated for rerouting within the Plan, measurement shall apply to an average length for the group of cables not individual cable lengths. Installation of the rerouted cable shall be considered incidental. Payment will be made under Item 2550.603 (REROUTE CABLE) at the Contract bid price per linear foot, which shall be compensation in full for all costs incidental thereto, including but not limited to Disconnecting and Terminating cables, FO Cable Installation Requirements, rerouting the cable, removing and relocating existing conduit as necessary, protecting the cable, Grounding, Labeling, and all materials and labor necessary to construct the Reroute Cable.

SZ-39 (2550) BORED CONDUIT

This work shall consist of furnishing and installing Bored Conduit, which shall be in accordance with the Mn/DOT Standard Specifications, Mn/DOT Standard Plans/Plates, the Plans, and the following:

SZ-39.1 Bored Conduit shall conform to but not be limited to the following Mn/DOT Specifications except as modified by these provisions:

(A) Installation: Mn/DOT 2565.3.

(B) NMC: Mn/DOT 3803.

(C) RSC: 3801.

(D) Expansion Fittings: 3839.

SZ-39.2 For installation under an existing roadway or paved surface, Bored Conduit shall be Heavy-wall rigid PVC or HDPE and shall be Schedule 80.

SZ-39.3 All conduit under roadways shall be continuous without joints.

SZ-39.4 Bored Conduit installed under slope paving shall be accomplished without damage to the slope paving.

SZ-39.5 Bored Conduit shall be installed 1.5 m (60 inches) below the bottom of the finished driving surface. Bored Conduit under roadway surfaces shall extend 10 feet beyond the pavement edge or curb line. The transition from the routine 0.9 m (36 inches) depth of direct-buried cable to the 1.5 m (60 inches) depth under a roadway or paved shoulder shall not exceed one foot vertical per five feet horizontal.

SZ-39.6 Bored conduit shall be installed at depths according to the Plan if the Plan calls out for deviations from these specifications.

SZ-39.7 Standard bell ends shall be installed on all conduit ends to prevent damage to cables during installation.

SZ-39.8 **MEASUREMENT AND PAYMENT**

Measurement will be made by the length of Bored Conduit furnished and installed as specified. Payment for BORED CONDUIT of each size will be made in accordance with the schedule set forth below at the appropriate Contract unit bid price for each separate item of work, which shall, in each instance, be compensation in full for the costs of all materials, equipment, and labor required to complete the work as specified, to the satisfaction of the Engineer.

Item No.	Description	Unit
2550.603	___ Bored Conduit	meter (**linear foot**)

SZ-40 (2550) FIBER OPTIC CABLE

This work shall consist of furnishing and installing Fiber Optic Cable, which shall be in accordance with the Mn/DOT Standard Specifications, Mn/DOT Standard Plans/Plates, the Plans, and the following:

SZ-40.1 **INSTALLATION REQUIREMENTS**

The Installation Requirements for FO Cable shall comply with Mn/DOT 2550.3 and the following provisions:

(A) Additional lengths FO Cable shall be stored in end-equipment Control cabinets, FO Patching Shelters, and TMS Shelter Cabinets.

(B) The following lengths of outer jacket and armor shall be removed from field terminated FO Cable beyond the 2.4 to 4.6 m (8 to 15 feet) necessary for fiber management in the splice enclosure:

a. Remove 10 m (33 ft) of the outer jacket of cable terminating in a ground mounted control Cabinet or Signal Cabinet.

(C) FO Cable shall be placed a minimum of 36 inches below finished grade.

(D) FO cable shall be placed a minimum of 60 inches below finished grade when it is placed under a road.

(E) For lengths of FO Cable over 600 feet the Contractor shall employ the Air Assisted method for installation.

(F) See **GROUNDING** on page 8 for grounding requirements.

(G) Expected tension on the FO Cable and pulling tape shall be calculated prior to installing the FO Cable in conduit runs. The pulling force shall be distributed between the inner strength member and the aramid fibers by securing both to the main pulling device.

(H) A "break-away" type pulling attachment shall be utilized to protect against over stressing the FO Cable. A cable grip that pulls only on the outer jacket to pull FO Cable shall not be allowed.

(I) Damage to the FO Cable from any source or exceeding the manufacturer's recommended tensile strength limits or cable-bending radius is cause for the cables to be rejected. The Contractor shall ensure a minimum bend radius of 250 mm (10 inches) during installation (loaded cable) and minimum bend radius of 200 mm (8 inches) after installation (static cable).

(J) Often, FO Cable is pulled through conduit/handhole networks. Using the 610 mm (24 inch) diameter handholes as a fiber pull box, is likely to exceed the minimum loaded bend radius and cause damage to the cable fibers. The Contractor shall not use the handhole as a fiber pull box.

(K) Slack FO cable shall be provided for FO cables spliced within vaults. Provide twenty one meters (seventy feet) of slack FO Cable coiled in these vaults per each vault entrance/exit. Provide other lengths of Slack FO Cable if called for in the Plan.

(L) Backfill open trench installations with granular material 0.15 m (0.5 feet) over the FO Cable conduit elevation.

(M) **Air Assisted FO Cable**

a. Long radius bends shall be utilized in equipment foundations and other situations requiring the negotiation of sharp angles.
b. The duct system shall be properly installed utilizing pressure tight splices.

    i. Seal one end of the duct and pressurize the duct utilizing a sealed blowing machine.
    ii. The duct shall maintain 897 kPa (130 psi) without realizing significant pressure loss
    iii. Use care near pressurized ducts.

c. High air speed blowing shall require the front end of the FO Cable to be endcapped to prevent the cable from getting hung up in the duct.
d. Utilize proper air seals to fit the OD of the FO Cable.
e. Provide proof that the duct is properly spliced and not crushed by blowing a hard mandrel through the duct.
f. Clean and dry the duct utilizing the following procedures

    i. Blow a tight fitting foam carrier through the duct at high pressure. The foam shall travel at approximately 30 mps (100 fps).
    ii. If excess water and/or dirt is expelled from the duct, repeat the process until minimal water and/or dirt is observed.
    iii. Dry the duct with airflow.

g. For high speed air machines (no missile), inject the recommended amount of approved lubricant and spread it with a foam carrier. For piston type machines, inject the majority of the lubricant in front of the missile with some placed behind the missile.

h. For push/pull machines, attach the piston to the FO Cable and insert the piston into the duct.

i. For high air speed machines, hand push approximately 30 meters (100 feet) of FO Cable into the duct prior to activating the machine.

j. Use caution in bringing up the air and hydraulic pressure.

SZ-40.2 **HAS MET**

The following items have met the above specifications:

SZ-40.3 **APL**

Mn/Dot approved FO Trunk and Armored FO Pigtail Cable is listed on the following Website:

http://www.dot.state.mn.us/products/trafficmgtsystems/index.html

SZ-40.4 **MEASUREMENT AND PAYMENT**

Measurement will be made by the length of Fiber Optic Cable furnished and installed as specified. Payment for FIBER OPTIC CABLE of each size and type will be made in accordance with the schedule set forth below at the appropriate Contract unit bid price for each separate item of work, which shall, in each instance, be compensation in full for all costs incidental thereto, including but not limited to FO Cables, Installation Requirements, and all materials, equipment, and labor required to complete the work as specified, to the satisfaction of the Engineer.

Item No.	Description	Unit
2550.603	Fiber Optic Trunk Cable ___ ___	meter (**linear foot**)
2550.603	Armored Fiber Optic Pigtail Cable ___ ___	meter (**linear foot**)

SPECIAL PROVISIONS FOR

DIVISION 2
SITE WORK – SPECIAL PROVISIONS – BURNSVILLE SANITARY SEWER AND WATERMAIN PLANS

DIVISION 2– BURNSVILLE SANITARY SEWER AND WATERMAIN PLANS

DIVISION 2 BURNSVILLE SANITARY AND WATERMAIN

PART A- MnDOT SPECIFICATION MODIFICATIONS

PART B: C.E.A.M. SPECIFICATION MODIFICATIONS

PART C: PRESSURE REDUCING STATION SPECIFICATIONS

PART D: PIPELINE STEEL CASING PIPE AND BORING AND JACKING SPECIFICATIONS

I hereby certify that the Division 2 Special Provisions were prepared by me or under my direct supervision, and that I am a duly Registered Professional Engineer under the laws of the State of Minnesota.

Ryan Peterson, PE

Date: 6/29/12 Registration No. 42844

DIVISION 2

SITE WORK – SPECIAL PROVISIONS – BURNSVILLE SANITARY SEWER AND WATERMAIN PLANS

PART A – MnDOT SPECIFICATION MODIFICATIONS

SPECIFICATIONS REFERENCES: These Special Provisions add to, amend or further change MnDOT's Standard Specifications, 2005 Edition as stated

2103 – DISCONNECTION OF SEWER AND WATER SERVICES

2103.1 DESCRIPTION:

DISCONNECT SEWER SERVICE

At the time of demolition of a building, it may become necessary to disconnect internal water and sewer lines from the mains. A licensed plumber must do this work. This requirement is supported by Building Regulations that require any person demolishing or removing any building or part of a building, to notify the City of Burnsville before commencing works and arrange for the disconnection of its services.

This work shall consist of removing an existing pipe sewer in accordance with the applicable MnDOT Standard Specifications. The disconnected sewer pipe sewer shall be removed and capped watertight at the main. Capping of the sewer pipe shall be considered incidental work for which no direct payment will be made.

To disconnect the seven properties from the sewer main, a licensed plumber must disconnect the building from the sewer main and ensure the sewer connection point is left sealed in a manner that complies with the appropriate Plumbing Regulations and Standards.

DISCONNECT WATER SERVICE

At the time of demolition of a building, it may become necessary to disconnect internal water and water lines from the mains. A licensed plumber must do this work. This requirement is supported by Building Regulations that require any person demolishing or removing any building or part of a building, to notify the Water Service Provider before commencing works and arrange for the disconnection of its services.

This work shall consist of removing existing water service pipe to the main in accordance with the applicable MnDOT Standard Specifications. The disconnect water service shall include water service pipe removed and capped watertight at the main. This procedure must be completed according to industry standards given that the cap or plug will be under significant pressures. Capping of the water pipe shall be considered incidental work for which no direct payment will be made.

To disconnect the seven properties from the water main a licensed plumber to disconnect the building from the water main and ensure the water connection point is left sealed in a manner that complies with the appropriate Plumbing Regulations and Standards.

2103.4 METHOD OF MEASUREMENT:

Payment for "Disconnect Sewer Service" and "Disconnect Water Service" shall be made at the contract unit bid price per each.

2103.5 BASIS OF PAYMENT:

Payment for "Disconnect Sewer Service" and "Disconnect Water Service" shall include all means, methods and materials necessary to complete the work described in 2103.1 Description.

2104 – REMOVING PAVEMENT AND MISCELLANEOUS STRUCTURES

2104.1 DESCRIPTION:

This work shall consist of salvaging for reuse or removing items from the project site that are specifically listed on the Proposal Form. These items include signs, bituminous and concrete surfaces, concrete curb and gutter, storm sewer pipe and structures, or sanitary sewer and watermain appurtenances.

2104.3 CONSTRUCTION REQUIREMENTS:

E Abandoned Pipe: Pipes to be abandoned may include watermain and sanitary sewer. Pipe shown on the plan to be abandoned shall be blown full with silica sand and bulk headed or plugged on each end.

2104.5 BASIS OF PAYMENT:

Payment for "Salvage Hydrant" shall be made at the contract unit bid price per each.

Payment for "Abandon Pipe" shall include all materials and labor necessary to complete the work and shall be paid per unit price bid.

2105 – EXCAVATION AND EMBANKMENT

2105.2 MATERIALS:

E Trench Maintenance: "Trench Maintenance" shall include the daily maintenance of mainline watermain and sanitary sewer trenches, driveways crossing the trenches and adjacent right-of-way/easement construction areas.

2105.3 CONSTRUCTION REQUIREMENTS:

"**Trench Maintenance**" shall include a minimum of four inch (4") pipe, new or salvaged, to provide temporary drainage for driveways, intersections and various sites throughout the construction area. This work shall include the daily grading and ramping of driveways and all trench edges for safety and driveability. Other materials needed for maintenance shall be paid for under unit price bid as provided in the bid proposal. Daily maintenance work outside of the trench area not covered by unit price bid items shall be considered incidental to the salvage operations.

Removal of <u>all</u> trench maintenance materials to complete the building of the typical section shall be included in "**Trench Maintenance**" unit price bid item. This work shall be the responsibility of the prime Contractor.

2105.4 METHOD OF MEASUREMENT:

"**Trench Maintenance**" will be a one-time measurement of longest utility mainline (usually watermain) as computed from the plans and any field adjustments made to the plans.

2105.5 BASIS OF PAYMENT:

"**Trench Maintenance**" payment as specified will be paid on a linear foot basis.

2123 – EQUIPMENT RENTAL

2123.5 BASIS OF PAYMENT:

A bid allowance has been provided in the proposal form for equipment rental for the street reconstruction work. The Owner will pay the Contractor from the rates listed in the "Rental Rate Blue Book" (latest edition) published by the Equipment Guide Book Company, for the weekly rate divided by 40, times the actual hours used for any work ordered by the Engineer.

This bid item will also include the restoration of gardens, rock gardens and any landscaping disturbed by construction and not included in other contract bid pay items. The Owner will pay time and material for the Contractor to restore such gardens, etc. to their original condition using like materials. Driveways, sod and other items having separate bid items will not be included in this restoration payment.

All work performed under the item Equipment Rental shall be in accordance with Mn/DOT 1904, Extra and Force Account Work. If equipment is used to perform extra work in accordance with Mn/DOT 1904 then and only then it shall be paid for under this bid item.

Payment for equipment rental will be made as a percentage of the overall lump sum bid allowances in accordance with the above.

2451 STRUCTURE EXCAVATIONS AND BACKFILLS

2451.1 DESCRIPTION:

Granular Material shall be used for driveway maintenance or as directed by the Engineer.

2451.2 MATERIALS:

A Granular Materials:

Course filter aggregate shall meet the following gradation requirements:

Sieve Size	Percent Passing
1 ½"	100.0
1"	73.3
3/8"	1.4
#4	1.0

2451.4 METHOD OF MEASUREMENT:

B **Granular Materials:** Material shall be measured per ton.

2506 – MANHOLES AND CATCH BASINS

2506.1 DESCRIPTION:

This work consists of constructing or reconstructing catch basins and chimney seals. This work also consists of the adjustment of manholes, catch basins and valve boxes to meet either interim or final grade. Construction of manholes, catch basins and valve boxes shall be accomplished in accordance with applicable sections of the City Engineers Association of Minnesota, Standard specifications.

2506.2 MATERIALS:

I **Manhole chimney seals and extensions** shall have stainless steel expansion bands and shall be for internal mounting.

L **Castings** shown on the plans shall be Neenah R-1642 with "self-sealing" lids and two (2) concealed pick holes, or approved equal. The minimum total allowable weight shall be 380 lbs.

2506.3 CONSTRUCTION REQUIREMENTS:

F **Manhole and catch basin castings** must fit closely in the rings in any and all positions, so there will be no rocking from pressure applied on any point on the cover. Manhole covers shall bear the words "Sanitary Sewer", "Storm Sewer" or "Water" on top, to identify the type of facility the respective structure is installed over. **No wood shims shall be used to set the rings.**

G **Manhole and catch basin castings** shall be adjusted to an elevation of one-fourth inch (1/4") to one-half inch (1/2") below the grade of the roadway pavement. The Contractor shall furnish and install new adjustment rings at no additional compensation as an item incidental to the cost of adjusting manholes and catch basins. Manholes shall be adjusted once for base course construction and again a second time, whenever the final wear course is to be placed the following construction season. Any structure not meeting the required tolerance shall be adjusted to the appropriate elevation at no cost to the owner.

Adjust frame and ring casting shall include the removal and installation of all new adjusting rings. Each structure when brought to finish grade shall have two (2) rings minimum and five (5) rings maximum and have a maximum distance from the top of the cone to the finished grade of two (2.0') feet. Adjustments not meeting these specifications will be at the Engineer's direction and approval.

Adjust frame and ring excess depth shall include the removal and installation of all new adjusting rings. Each structure when brought to finish grade shall not exceed more than ten (10) rings or have a maximum distance from the top of the cone to the finished grade of three (3.0') feet. Adjustments not meeting these specifications will be at the Engineer's direction and approval.

I **Manhole chimney seals and extensions** shall be installed to completely span the chimney heights of the manholes. The seals and extensions shall otherwise be installed in accordance with the manufacturer's recommendations.

2506.4 METHOD OF MEASURE:

Reconstruct Drainage Structure shall consist of all materials and labor needed to remove and reconstruct a portion of an existing manhole to City standards. This includes, but is not limited to sections, cones, rings, casting, aggregate and patching bituminous.

Reconstructed Drainage Structures shall be measured to the nearest tenth of an foot from the bottom of the reconstructed portion to the finished top of the ring casting. Reconstruct Manhole shall include adjustment to the base course elevation when the wear course is to be placed in the following year.

2506.5 BASIS OF PAYMENT:

Payment for Construct Drainage Structure Design Special 13 will be paid for to a depth of eight feet (8.0') at the contract unit price per structure, which price shall include precast base and top sections and cover and frame. Manholes shall be measured from invert of sewer to top of cover.

Structures to be constructed to a depth greater than eight feet (8.0') will be paid for at the contract unit price per vertical foot for each foot of depth that is greater than eight feet (8.0') according to the unit price bid for Construct Drainage Structure Design Special 14. This will be measured to the nearest tenth (1/10) of a foot.

Payment for reconstructing drainage structures shall include all labor and materials to reconstruct the specified structure excluding the casting, but which will include furnishing and installing new adjustment rings at no additional compensation. Payment shall be at the contract unit bid price per lineal foot measured to the nearest tenth (1/10) of a foot from the bottom of the reconstructed portion to the top of casting.

Adjust frame and ring casting shall be paid for twice whenever the frame and ring casting of existing structures are adjusted once to an interim base course elevation and then a second time to the final wear course elevation whenever the wear course is placed the following construction season. Adjust frame and ring casting will only be paid once when the wear course is placed in the same year as the base course.

On projects without manhole reconstructs the Engineer can prorate a two (0.2) tenth of each "adjust frame and ring casting" for each ring above five (5) rings. Each adjust with more than five (5) rings will be at the Engineer's direction and approval.

Adjust frame and ring casting will be considered incidental to reconstruct and/or new manholes when the frame and ring casting is adjusted to the base course elevation and/or when the frame and ring casting is adjusted to the wear course elevation whenever the wear course is placed the same year as the base course. Adjust frame and ring casting will be paid once for reconstruct and/or new manholes when the frame and ring casting is adjusted to the wear course elevation.

Adjust frame and ring casting excess depth shall be paid for twice whenever the frame and ring casting of existing structures are adjusted once to an interim base course elevation and then a second time to the final wear course elevation whenever the wear course is placed the following construction season. Adjust frame and ring casting excess depth will only be paid once when the wear course is placed in the same year as the base course.

Adjust frame and ring casting excess depth shall be paid whenever more than 5 rings are needed or as directed by the Engineer in the field

Metal Adjusting Rings for manholes may be used prior to placement of wear course.

Connection to existing drainage structure shall include all labor and materials required to make the complete connection and will be paid for at the contract unit price for each.

Constructing manholes or catch basins over an existing sanitary sewer shall include all labor and materials to break into the existing sanitary sewer and completely construct the new structure including casting and is incidental to the sewer work. No separate payment will be made for connection to the existing sanitary sewer.

Chimney Seals shall include all labor and materials required to install the chimney seals (with no extensions) and shall be paid for at the unit bid price for each.

Chimney seal extensions shall include all labor and materials needed to completely span the manhole chimney and will be paid for at the unit bid price per lineal foot.

PART B: CITY ENGINEERS ASSOCTION OF MINNESOTA SPECIFICATION MODIFICATIONS

SPECIFICATIONS REFERENCES: These Special Provisions add to, amend or further change the City Engineers Association of Minnesota (CEAM), Standard Specifications, 1999 Edition as stated

2600 TRENCH EXCAVATION AND BACKFILL/SURFACE RESTORATION

2600.2 MATERIALS:

A **Granular Materials:** The Contractor shall use on site material for pipe bedding and backfill as approved by the Engineer. If the Contractor encounters unstable soil not suitable for bedding of pipe, he/she shall notify the Engineer. As directed by the Engineer, he/she shall remove and replace all unstable material with stabilization material as ordered by the Engineer.

All RCP and ductile iron pipe shall be bedded as per Class C bedding, unless otherwise directed by the Engineer.

All PVC pipe shall be bedded where required with MnDot 3149.2B1 granular borrow, expect that 100%, by weight, shall pass the 1” sieve.

C **Insulation:** Rigid board insulation shall have a 60 psi vertical compressive strength and shall have 4’ x 8’ x 2” dimensions.

E **Calcium Chloride:** The City may require that calcium chloride solution be applied on the compacted base for dust control. Calcium chloride shall be applied at a rate of 0.30 gallons per square yard.

2600.3 CONSTRUCTION REQUIREMENTS:

A2 Establishing Line and Grade: Line and grade will be established by the Engineer as in 1050 – Field Engineering. The minimum cover as set forth on the plans must be maintained. Whenever the established line and grade conflicts with an existing or proposed sewer line the Contractor shall notify the Engineer's onsite representative. Conflicts with sewer lines will be handled as follows:

I. Line locations where sewer is in direct conflict with existing water main and water services the water main and water services shall be lowered to provide at least 18 inches of vertical distance between the top of the water main or service and the bottom of the sanitary or relocated in accordance with the Plans.

II. Water mains crossing above storm or sanitary sewers shall be laid to provide a separation of at least 18 inches between the bottom of the water main and the tope of the sewer. When local conditions prevent a vertical separation as described, the following construction shall be used:

A. Sewers passing over or under water mains shall be constructed of materials equal to water main standards of construction for a distance of at least 9 feet on either side of the water main.

B. Water mains passing under sewer shall, in addition, be protected by providing the following:

1. A vertical separation of at least 18 inches between the bottom of the sewer and the top of the water main;

2. Adequate structural support for the sewers to prevent excessive deflection of joints and settling on and breaking of the water mains;

3. A length of water pipe shall be centered at the point of crossing so that the joints will be equidistant and as far as possible from the sewer.

III. Water mains shall be laid at least 10 feet horizontally from any sanitary sewer or storm sewer, whenever possible. Whenever local conditions prevent a horizontal separation of 10 feet, a water main may be laid closer to a storm or sanitary sewer providing the following:

A. The bottom the of the water main is at least 18 inches above the top of the sewer;

B. Wherever this vertical separation cannot be obtained, the sewer shall be constructed of materials and with joints that are equivalent to water main standards of construction and shall be pressure tested to assure water tightness prior to backfilling.

Any and all adjustments to the laying of the water main shall be borne by the contractor. Adjustments to existing sewers or additional material costs for proposed sewers will be paid by extra work.

A4 Interference of Underground Structures: Whenever, during excavation for the water main, a house service line, which is part of the utility system, is encountered, the cost of cutting said service, providing temporary service and reconnecting house service shall be borne by the Contractor.

The Contractor shall cooperate with the utility company involved on this phase of the work. If any expense is incurred by the utility company in connection with such cutting and replacement of utility service lines, it is chargeable to the Contractor.

It shall be the Contractor's responsibility to notify the utility company involved sufficiently in advance of this proposed construction. The Owner shall not be responsible for any delay which the Contractor may encounter due to the failure on the part of the utility companies to do the necessary work promptly.

The Contractor shall be held liable for any damage to utility lines and house services due to carelessness or negligence on his/her part.

When existing sewers have to be taken up and removed, the Contractor shall at his/her own cost and expense provide and maintain temporary outlets and connections for all private or public drains and sewers. The Contractor shall also take care of all sewage and drainage which will be received from these drains and sewer; and for this purpose he/she shall provide and maintain, at his/her own expense, adequate pumping facilities and temporary outlets or diversions.

The Contractor at his/her own expense shall construct such troughs, pipes or other necessary structures, and be prepared at all times to dispose of drainage and sewage received form these temporary connections until such time as the permanent connections are built and in service. The existing sewers and connections shall be kept in service and maintained under the contract except where specified or ordered to be abandoned by the Engineer. All water or sewage shall be disposed of in a satisfactory manner so that no nuisance is created and so that the work under construction will be adequately protected.

B1 Operation Limitations and Requirements: Where possible, excavation materials shall be placed in areas that will not block existing vehicle and pedestrian traffic and drainage ways. The Contractor shall review proposed methods of operation with the Engineer prior to beginning the work. The Contractor shall maintain the roadway in a condition acceptable to the Engineer at all times until the final acceptance of the entire work by the City.

Blasting will not be permitted on this project unless approved by the Engineer. All requests to blast must be submitted in writing and accompanied by all necessary permits.

B2 Classification and Disposal of Materials: When the trench is carried through rock, the depth of excavation shall be six inches (6") below the outside barrel of the pipe, fittings, and other appurtenances for pipe of sixteen inches (16") diameter or less and shall be nine inches (9") below the outside barrel of the pipe, fittings and other appurtenances for pipe of eighteen inches (18") diameter or greater. Adequate clearance for properly jointing pipe laid in rock trenches shall be provided at bell holes. Sand shall be backfilled and tamped to proper grade before the pipe is laid. Width of excavation shall be computed on a basis of a uniform width twelve inches (12") greater than the outside diameter of the hubs or bells of pipe.

Rock excavation shall be defined as removal of all boulders larger than one third cubic yard ($^1/_3$ CY) in volume and of ledge rock, concrete, or masonry structures that require an air hammer or blasting to remove. Loose, soft or disintegrated shale or rock in its natural state, masonry or concrete which can be economically removed without air hammer or blasting will be classified as "loose rock". No additional compensation will be provided for excavation of this character.

B3 Excavation Limitations and Requirements: It shall be the Contractor's responsibility to notify the Engineer of changing soil conditions which may be of poor bearing capacity and when organic soils are encountered. Where utilities are placed on unstable soils without notification of the Engineer, the Contractor shall be responsible for all repairs and corrections of the installation without further compensation.

Granular foundation materials for use where unstable foundation materials are encountered shall not be used as an aid to facilitate installation of pipe in wet soil conditions. Use of these materials in this manner in lieu of providing adequate dewatering measures shall be considered incidental to the construction with no additional compensation allowed therefore.
When the trench is carried through rock, the depth of excavation shall be six inches (6") below the outside barrel of the pipe, fittings and other appurtenances. Adequate clearance for properly jointing pipe laid in rock trenches shall be provided at bell holes. Sand shall be backfilled and tamped to proper grade before the pipe is laid. Width of excavation shall be computed on a basis of a uniform width nine inches (9") greater than the outside diameter of the hubs or bells of pipe.

Rock excavation shall be defined as removal of all boulders larger than 1/3 cubic yard in volume and of ledge rock, concrete or masonry structures that require an air hammer or blasting to remove.

Loose, soft or disintegrated shale or rock in its natural state, masonry or concrete which can be economically removed without air hammer or blasting will be classified as "loose rock" and no additional compensation will be provided for excavation of this character.

B4 Sheet and Bracing Excavations: The cost of all special construction techniques necessary to protect in place facilities shall be included in the unit price bid for pipe installation with no additional compensation allowed therefore.

E Pipe Line Backfill Operation: Class C is that method of bedding trench conduits in which the conduit is placed with ordinary care in an earth or compacted granular foundation, shaped to fit the lower part of the conduit exterior with reasonable closeness for a width of at least one sixth (1/6) of the conduit breadth. The remainder of the conduit is surrounded to a height of at least six inches (6") above its top by granular materials, shovel placed and shovel tamped, to fill completely all spaces under and adjacent to the conduit. The fill is tamped thoroughly on each side and under the conduit as far as practicable in layers not exceeding six inches (6") in thickness.

Granular Borrow is the method of bedding trench conduits in which the conduit is placed with ordinary care in a compacted granular foundation of at least three inches (3"), shaped to fit the lower part of the conduit exterior with reasonable closeness and shall extend up to the spring line of the pipe. The remainder of the conduit is surrounded to a height of at least twelve inches (12") above its top by granular materials, shovel placed and shovel tamped, to fill completely all spaces under and adjacent to the conduit. The fill is tamped thoroughly on each side and under the conduit as far as practicable in layers not exceeding six inches (6") in thickness.

Succeeding layers of backfill may contain coarse materials but, shall be free from pieces of rock, frozen material, concrete, organic material, blacktop chunks, rubbish and other similar articles whose presence in the backfill, in the opinion of the Engineer, would cause settlement of the trench or damage the pipe. No topsoil, loam or other unsuitable materials shall be used as backfill in the paved portion of the street. Under no conditions shall lumps of broken blacktop or

other such material of a size larger than two inches (2”) in diameter be placed in the upper one foot (1’) of the finished grade.

Backfilling shall be done in uniform lifts completely compacted over the full width of the excavated area. The material shall be compacted to 95% of the standard proctor density in the lower parts of the trench. Material in the upper two feet (2’) of the trench shall meet 100% proctor density.

Backfilling of trenches in the traveled portions of the streets and under the curbs shall be accomplished in one foot (1’) lifts. Where there is granular soil, compaction shall be obtained in each lift using a vibratory compactor. Where there are cohesive soils, the compaction of each lift shall be obtained using a sheep’s foot roller. No peat or other organic soils shall be backfilled under the traveled portions of streets.

Where, in the opinion of the Engineer, the native soil is unsuitable for backfill material, it will be the Contractor’s responsibility to excavate the trench, haul away all unsuitable backfill material and backfill the trench in accordance with the specifications with all acceptable excess material which may be obtained from other trenches or excavations within the project area. Payment for truck hauling this material will be made at the contract unit price bid for Class A excavation. In the event that deficiencies still exist in the backfill of the trench after all available excess material has been utilized as described above, the Contractor shall provide additional approved material as may be authorized and verified by the Engineer. Such material shall be furnished and placed at the contract unit price per cubic yard. Unsuitable material that is loaded into trucks and hauled away to the dump areas will be paid for at the contract unit price bid for Class A excavation (vehicle measure). There will be no payment for unsuitable material that is excavated and wasted in the immediate area.

If insufficient suitable materials are available to complete backfilling, excess suitable materials from other areas of the project shall be used to complete the work.

Rubber tired equipment shall be used to backfill trenches where other equipment will damage existing bituminous surfaces or sod.

The Contractor shall provide one motor grader which shall be available at the project at all times for surface maintenance. If, in the opinion of the Engineer, the Contractor is not maintaining the street surfaces sufficiently with one motor grader, he/she shall provide additional blades at no additional compensation.

In addition to the blading and maintenance requirements specified under this article, the Contractor shall also be required to adequately control dust on the streets after compaction and grading when directed by the Engineer. When so directed by the Engineer, the Contractor shall provide one tank truck of adequate size with spray bar or other suitable equipment for sprinkling streets which shall be available at all times for street maintenance. If in the opinion of the Engineer, the Contractor is not maintaining adequate dust control with one tank truck, he/she shall provide additional tank trucks at no additional compensation.

In all cases, the Contractor shall blade the roadway after the trench has been backfilled, so that it shall be passable to traffic at all times. The Contractor shall maintain the roadway in a condition acceptable to the Engineer at all times until the final acceptance of the entire work by the City.

All excavation in trenches shall be backfilled to the original ground surface or to such grades as specified or shown on the drawings. The backfilling shall begin as soon as practical after the pipe has been placed. Backfilling shall be done as completely as possible so as to prevent settlement. The materials shall be compacted to attain complete filling by using the best materials available for this purpose, free from boulders or stones. Depositing of the backfill shall be done so the shock of falling material will not injure the structure. Grading over and around all parts of work shall be done as directed by the Engineer.

Disposition of excess material will be specified in contract special conditions.

Test rolling may be required. In the event the street fails to pass test rolling, the Contractor shall make reparations as necessary.

Complete cleanup shall proceed directly behind the backfilling to accommodate the return to normal conditions. The Contractor shall be sufficient equipment on the job to assure timely backfill and cleanup at all times. No trenches shall be left open over night unless permitted by the Engineer and all safety precautions are taken prior to leaving the site. The Contractor takes full responsibility for any mishaps that might occur.

The Contractor shall remedy at his/her own expense any defects that appear in the backfill for a period of one year following completion.

F **Restoration of Surface Improvements:** Any concrete, blacktop, crushed rock or other type of driveway carelessly disturbed by the Contractor during construction shall be replaced or rebuilt to a condition at least equal to its condition at the time of removal. There will be no compensation allowed for this item.

F1 **Turf Restoration:** Any trees which lie within the limits of the excavation shall be removed by the Contractor only with the permission of the Engineer.

Topsoil shall be placed to a thickness equal to that removed up to a maximum of twelve inches (12”). No sod shall be placed on less than four inch (4”) of compacted topsoil. No peat material shall be allowed.

The sod provided for this project and the procedure for sodding shall conform to the requirements Section 2575, respectively, of the latest version of the Specifications for Highway Construction of the Minnesota Department of Transportation unless specifically amended herein.

2600.5 BASIS OF PAYMENT:

In the event that suitable, fine granular and granular material is not encountered during the normal excavation of the pipe trench or when the material encountered is determined unsuitable by the Engineer for backfilling around the conduit as required for Class C and Class E bedding, the Contractor shall provide and place such approved material (sand fill) as required at the unit bid price.

2611 - WATERMAIN AND SERVICES

2611.1 DESCRIPTION:

This work shall consist of watermain, appurtenances, fittings, pressure reducing valve, temporary water systems, temporary water plumbing and other miscellaneous water system construction.

2611.2 MATERIALS:

A1 Ductile Iron Water Pipe and Fittings:

Ductile iron pipe shall be manufactured in the United States of America and in accordance with the requirements of ASA Specification A21.51 (AWWA Cl. 52.) and shall be cement lined.

Retainer glands shall be made of high strength ductile iron conforming to the requirements of ASTM A 536, Grade 65-45-12. Dimensions shall be compatible with standardized mechanical joints conforming to the requirements of AWWA C 111/ANSI A 21.11 and AWWA C153/ANSI 21.53. Breakaway tops shall be incorporated in the design of the actuating bolts to visually ensure property torque. The mechanical joint restraining devices shall have a working prossure rating of 350 psi for all sizes up to and including 16". 18" and larger retaining glands shall have a minimum working pressure of 250 psi.

If requested by the Engineer, the pipe manufacturer shall furnish to the Engineer three certified copies of all tests run on the pipe. All tests shall be observed and certified by an independent testing laboratory. Such laboratory shall be a member of the American Council of Independent Laboratories, Inc. The Engineer must approve the pipe based on the test results before any pipe may be shipped to the job. The decision of the Engineer shall be final with regard to the approval or disapproval of the test reports.

The cost of conducting the above tests, the observing and certification of same by an independent testing laboratory shall be paid for by the Contractor.

When so directed by the Engineer, the Contractor shall provide accurate scales near the site of the construction. He/she shall weigh a sufficient number of pipes and fittings from each shipment to verify weights. Should the weights prove inconsistent, the Engineer may require the weighing of all materials delivered. The cost of all weighing shall be at the Contractor's expense.

All watermain fittings shall be ductile iron Class 350 compact fittings conforming to ANSI A21.53/AWWA C153. All bolts used in the construction of watermain shall have an anti-corrosive coating that shall consist of a ceramic filled, baked on fluorocarbon resin coating.

All gaskets and retainer glands are incidental to the contract unit price for body weight of ductile iron fittings. Any fitting weight not included in this table shall be measured as published by AWWA C153/A21.53.

Bends	Size	Weight
90º	14"	210 lbs
90º	12"	108 lbs
90º	10"	89 lbs

90º	8”	57 lbs
90º	6”	39 lbs
45°	16”	202 lbs
45°	14”	164 lbs
45°	12”	86 lbs
45°	10”	70 lbs
45°	8”	46 lbs
45°	6”	32 lbs
45°	4”	23 lbs
22 ½º	16”	178 lbs
22 ½º	14”	148 lbs
22 ½º	12”	84 lbs
22 ½º	10”	64 lbs
22 ½º	8"	46 lbs
22 ½º	6”	32 lbs
11¼º	16”	158 lbs
11¼º	14”	130 lbs
11¼º	12”	74 lbs
11¼º	10”	58 lbs
11¼º	8”	42 lbs
11¼º	6”	30 lbs

Reducers	Weight
16”x14”	140 lbs
16”x12”	124 lbs
16”x 8”	124 lbs
12” x 10”	64 lbs
12” x 8”	60 lbs
12” x 6”	60 lbs
10” x 6”	47 lbs
8” x 6”	36 lbs

Sleeves	Weight
16”	172 lbs
14”	140 lbs
12”	76 lbs
10”	62 lbs
8”	46 lbs
6”	36 lbs

Tees	Weight
16” x 16”	322 lbs
16” x 14”	316 lbs
16” x 8”	248 lbs
16” x 6”	228 lbs

14” x 8”	206 lbs
14” x 6”	182 lbs
12” x 12”	160 lbs
12” x 8”	125 lbs
12” x 6”	110 lbs
10” x 10”	120 lbs
10” x 8”	105 lbs
10” x 6”	90 lbs
8” x 8”	86 lbs
8” x 6”	72 lbs
8” x 4”	60 lbs
6” x 6”	56 lbs

Plugs	Weight
14”	120 lbs
12”	85 lbs
10”	65 lbs
8”	45 lbs
6”	25 lbs

Cross	Weight
16” x 16”	765lbs
16” x 14”	710 lbs
14” x 8”	450 lbs
14” x 6”	435 lbs
12” x 12”	212 lbs
12” x 6”	129 lbs
10” x 10”	155 lbs
10” x 8”	138 lbs
10” x 6”	110 lbs
8” x 8”	111 lbs
8” x 6”	105 lbs
6” x 6”	80 lbs

B Fire Hydrants: shall be AWWA-approved Waterous 5-1/4 WB67-250 DDP Pacer, conforming to the latest revision to AWWA Standard C-502, dry barrel hydrant with 4” red Storz nozzle. The hydrants shall be painted red in conformance with existing City of Burnsville requirements and conform to the following requirements:

1) Valve opening shall be a minimum of five inches (5”).
2) The lower barrel shall be one (1) piece, centrifugally cast ductile iron. Break off Flangewithin 2” of finished grade.
3) Equipped with two (2) two and one half inch (2½”) hose connections with National Standard Threads and one (1) four inch (4”) red Storz nozzle. Outlet nipples shall be bronze or suitable non-corrodible metal, fastened to the hydrant by use of a mechanically attached nozzle and secured to the nozzle section by use of a retainer ring. Hose and Storz nozzle caps shall be provided with neoprene rubber gaskets and shall be securely chained to

the barrel. The nozzle cap shall operate with a pentagonal nut cap. Nozzles shall be securely fastened to the nozzle section by the use of a threaded retainer and sealed with an o-ring.

4) Hydrant bonnet shall be installed with Storz nozzle faced towards the road unless directed otherwise.
5) All moving parts shall be bronze or non-corrodible metal. The hydrant rod shall be steel and the operational nut shall be ductile iron.
6) A positively operated, non-corrodible drip valve shall be provided to drain the hydrant when valve is closed and shall prevent leakage when valve is open. Leather, rubber or elastomer facing will not be accepted.
8) The bidder shall state weight of hydrants complete and shall furnish detail working drawings, specifications and description of hydrants which he proposes to furnish.
9) Hydrants shall include a hydrant locator installed on the hydrant. Locators shall not have a metal whip but, be made of a material which is flexible yet not permanently deformable. Locators' length shall be five feet (5') minimum and six feet (6') maximum and shall be bolt-on mounted. Locator shall be Hydrafinder type or approved equal.
11) All parts of hydrants furnished must be interchangeable for the hydrants proposed and for hydrants of similar make now in use in Burnsville and failure to fulfill this requirement in any hydrant will cause said hydrant to be unconditionally rejected and no payment will be made for said hydrant.
12) Care must be taken when handling hydrants to protect the paint. Whenever the paint is chipped or scratched, the Contractor shall repaint the hydrant.
13) The drip mechanism shall be removable with the main valve and seat. In areas where the hydrant base is installed below ground water, the drain shall be plugged and the hydrant marked with a metal tag to indicate the requirement to pump the hydrant after use.
14) The hydrant valve shall be the compression type to open against main pressure. The valve shall be urethane and shall have a tapered seat for positive closure. This entire mechanism shall be removable for repairs or replacement through the barrel without excavating.
15) The upper standpipe length shall be 16" and the nozzle height shall be 24" to the centerline of the nozzle. This height shall be obtained without an extension or spool piece unless approved by the Engineer.

C1 Valve Housings: shall be vertical cast iron, adjustable to a depth of cover of seven and one half feet (7½') over the top of pipe. All valve boxes shall consist of three piece type with sufficient adjustment to provide 6" of adjustment above and below grade.

Shafts shall be five and one fourth inch (5¼") diameter, bases shall be round and length adjustment shall be screw type.

Drop covers on valve boxes shall bear the word "WATER" on the top. Valve boxes shall have a #6 base. Box shall be minimally adjustable from seventy-four inches (74") to ninety-four inches (94"). Valves and boxes shall be considered integral units and the bid price shall include both items.

Gate valves deeper than eleven feet (11') shall have an operating rod to within one foot (1') of finished grade.

C2 Gate Valves: gate valves on ten inches (10") diameter water lines and smaller shall be installed on the line in a vertical position and provided with boxes.

Gate valves on eighteen inch (18") diameter water lines or larger shall be installed horizontally and include Bevel Gear and gear box when minimum cover cannot be maintained for vertical installation.

The gate valves shall be all ductile iron resilient wedge gate valves rated for 250 p.s.i. working pressure with mechanical joints and shall conform to AWWA Specification C515 with all stainless C304 bolts and with the modification that they must meet Burnsville water test specification (resilient wedge type.) Gate valves meeting AWWA C500 and C509 specification will not be allowed. All internal and external surfaces of the valve body and bonnet shall have fusion bonded epoxy coating complying with AWWA C550 applied electrostatically prior to assembly. Gate Valves shall open in a counterclockwise direction.

All valves shall have openings through the body of the same circular area as that of the pipe to which they are attached.

C3 Butterfly Valves: Butterfly valves on twelve inches (12") diameter water lines and larger shall be installed on the line in a vertical position and provided with boxes.

- Butterfly valves shall be of the short body rubber seated type, conforming to the latest revision of AWWA C504. Valves shall be bubble tight at the rated pressure and shall be suitable for both throttling and on/off isolation service.
- Valve body shall be of cast iron construction to ASTM A126 Class B.
- Valve discs shall be of ductile iron, ASTM A48 Class 4 with stainless steel seating edge.
- Valves shall be flanged. Flanged drillings shall be to ANSI B16.1 Class 125.
- Valve shafts shall be of solid 304 stainless steel corresponding to the design requirements of the latest revision of AWWA C504. The shafts shall be fastened to the disc by a means designed to provide vibration-proof connection.
- Seat on disc.
- Seats and shaft packing shall be of Buna-N.
- Seats to be fully adjustable in all sizes.
- Shaft bearings shall be of the self-lubricating corrosion resistant sleeve type designed for both horizontal and vertical shaft loading.
- Valves shall be hydrostatically tested for bubble tight shut-off in accordance with the latest revision of AWWA C504.
- All materials, coatings and lubricants to be suitable for potable water applications.
- Valve to be interior/exterior epoxy coated with NSF-61 Epoxy per AWWA C550.
- Valve to be NSF-61 approved.

Valves shall be provided with a two inches (2") square operating nut and shall open in a counter-clockwise direction.

All installed gate valves shall be shown to be keyable through a four inch (4") PVC pipe (held plumb) before backfilling.

D Water Service Pipe and Fittings: Services shall be new and unused.

Corporation stops: shall be operated with a ball valve and have copper flare assembly. Corporation stops shall be for sizes as specified in the Special Conditions for copper service pipe.

Curb Stops: shall be one-inch (1”) curb stops with a ball valve and have a copper flare assembly. All stops are to be for flared copper inlet and outlet.

Curb Boxes: shall operate with one and one quarter inch (1¼”) stack for use with one inch (1”) curb stop or larger. These should come complete with top, bottom section and stack for seven feet (7’) to eight feet (8’) of cover, and be adjustable for grade up and down. Curb stationary rod shall have a minimum of seven feet (7’) bury to a maximum of eight feet (8’) bury.

Service Saddles: shall be used on any service where three (3) threads cannot be engaged as per the table shown in AWWA C151, Table A.2. Saddles shall be used as necessary for pipe sizes up to 3”. Above three inches (3”), tees shall be used.

Copper service pipe: shall be soft type seamless tubing suitable for underground service and shall conform to the following standards:

Federal Specification WW-T-799a Type K
ASTM Specification B-88 Type K

All copper tubing shall be manufactured in the United States of America.

E Polyethylene Encasement Material: The material shall be 8-mil low density polyethylene film. The encasing tape shall be Scotchrap No. 50 (Polyvinyl) or approved equal, and be ten mils (10mm) thick.

2611.3 CONSTRUCTION REQUIREMENTS:

A1 Inspection and Handling

Proper implements, tools and facilities satisfactory to the Engineer shall be provided and used by the Contractor for the safe and convenient prosecution of the work.

Pipe and other materials shall be unloaded and distributed on the job in a manner approved by the Engineer. In no case shall materials be thrown or dumped from the truck. All materials unloaded in an unsatisfactory manner shall be rejected and work shall be stopped until such materials have been examined by the Inspector and approved. The Contractor shall furnish the necessary assistance in such examination of materials.

A2 Pipe Laying Operation

For mechanical joint pipe the last eight inches (8”) outside the spigot end of the pipe and the inside of the bell, fittings, and gate valves shall be thoroughly cleaned to remove oil, grit, tar (other than standard coating) and other foreign matter from the joint and them painted with soap solution of one half (½) cup of granular soap in one gallon (1 gal) of water. The mega-lug or approved equal shall then be slipped on the spigot end of the pipe with the lip extension of the gland toward the socket or bell. Paint the rubber gasket with soap solution and place on spigot end of pipe with thick edge toward mega-lugs or approved equal. A standard solution furnished by pipe manufacturers may be used instead of the soap solution.

After the spigot end of a pipe is placed into the bell and pulled home, the gasket shall be pressed into place within the bell evenly around the entire joint. After the mega-lug or approved equal is positioned behind the gasket, the Contractor shall install all bolts and nuts and tighten them with a

torque wrench. Nuts spaced 180 degrees apart shall be tightened alternately to produce equal pressure on all parts of mega-lugs or approved equal.

Jointing shall be done, unless specifically excepted above, in accordance with "Notes on Method of Installation" included in ASA Specification A.21.11 for a mechanical joint for pressure pipe and fittings.

When pipes are cut in the field, the cut or straight end shall be beveled and all sharp or rough edges shall be removed.

All foreign matter or dirt shall be removed from the inside of the pipe and fittings before it is lowered into its position in the trench, and shall be kept clean by approved means during and after laying. All openings along the line of the main shall be securely closed as directed, and in the suspension of work at any time, suitable stoppers shall be placed to prevent earth or other substances from entering the main.

Every pipe shall be bedded uniformly throughout its entire length.

A3 Aligning and Fitting of Pipe

Ductile iron pipe shall be cut only by sawing, milling or torch cutting in accordance with the manufacturer's recommendations.

All work under this contract shall be constructed in accordance with lines and grades shown on the drawings and as established by the Engineer. These lines and grades may be modified by the Engineer as provided in the contract. The Contractor shall furnish at his/her own expense such materials and render such assistance as may be required for setting lines and grade stakes, batter boards, templates, patterns, platforms, reference points, or other marks or points of line or grade.

The Contractor shall give the Engineer sufficient notice of his/her need for the establishment of line and grade so that the Engineer may have time to provide same. After lines and grades for any part of the work have been given by the Engineer, the Contractor will be held responsible for the proper execution of the work to be protected and preserved by him/her until authorized to remove them by the inspector. The Contractor shall at his/her own expense correct any mistakes that may be caused by their unauthorized disturbances or removal. The Engineer may require that work be suspended at any time when for any reason such marks cannot be properly followed.

No additional compensation shall be allowed the Contractor for any claims of crews being held up because of lack of line and grade stakes.

The grades shown on the plan are approximate. Modification of the pipe location or differences in existing elevation shall not be cause for additional compensation.

The Contractor shall remove all survey stakes and lath from the job site upon verification with the field inspector that stakes are no longer needed.

A4 Blocking and Anchoring of Pipe

All plugs, caps, tees, and bends deflecting more than twelve degrees (12°) shall be provided with reaction blocking. Concrete, suitable metal rods or harness which are rust proofed and/or mega-lugs or approved equal, may be used subject to the Engineer's approval. Reaction blocking shall

be so placed that all pipe and fitting joints are accessible for repair, and in such a manner as to provide bearing against undisturbed ground. All watermain piping shall be constructed to resist the thrust existing at valves, hydrants and all fittings by the use of mega-lugs or approved equal. Reaction blocks shall be required in addition to mega-lugs or approved equal as per the detail and the specification. Rodding to the nearest joint shall be required when installing watermain plugs.

Testing of lines shall not proceed until concrete thrust blocks have attained their design strength.

A5 Polyethylene Encasement

Polyethylene encasement will be installed on all ductile iron pipe, fittings, valves and hydrants or in the special conditions, or as directed by the Engineer.

The polyethylene encasement tubing shall be cut to provide for a minimum of one foot (1') of lap over both the adjoining pipes. The ends of the tubing shall be encased using three (3) circumferential turns of plastic adhesive tape.

The loose encasement on the barrel is to be pulled snugly around the barrel of the pipe and the excess folded over at the top. This fold will be held in place by means of six inch (6") strips of the plastic tape, placed at intervals of three feet (3') along the pipe barrel.

Bends, reducers and offsets shall be encasement in the same manner as the pipe.

Valves shall be encased by bringing the tube encasement on the adjacent pipe over the bells of the valve and sealing with adhesive tape. The valve bodies are then encased with flat sheets passed under the valve bottom and brought up around the body to the stem, and fastened with the tape.

A6 Excavation and Preparation of Trench

The trench shall be dug to the alignment and depth required and only so far in advance of pipe line as the Engineer shall permit. The sides of the trench shall be sloped and/or braced and the trench drained so that workers can work safely and efficiently. It is essential that the discharge pumps be laid to natural drainage channels or to drain sewers.

All trenches shall be excavated so that the pipe may be laid accurately to grade with a minimum of seven and one half feet (7½') of earth cover over the top of twelve inches (12") watermains or smaller.

The trench width, at the top of the trench, may vary depending on the depth of the trench and the excavated material encountered.

The trench width at pipe grade shall be ample to permit the proper laying and jointing of the pipe and fittings and for proper backfilling and compaction. The maximum clear width of trench at the top of the pipe shall not be greater than the outside diameter of the pipe plus two feet (2').

The trench shall have a bottom conforming to the grade to which the pipe is to be laid. The pipe shall be laid upon sound soil, cut true and even so that the barrel of the pipe will have a bearing for its full length. If excavation is made below grade, it shall be backfilled with well tamped pit run sand or fine gravel as approved by the Engineer at no additional expense to the City.

Bell holes shall be dug at the ends of each length of pipe to permit proper jointing. Excavations for manholes and other structures shall have twelve inches (12") minimum clearance on all sides.

The Contractor shall provide without additional compensation suitable temporary channels for any water that may flow along or across the site of the work. The excavated material shall be placed on one side of the trench except when permitted by the Engineer to use both sides. All material shall be so placed as not to obstruct any drain or gutter, or to unnecessarily obstruct any passageway.

A7 Unforeseen Underground Obstructions

The removal of old timber, artificial loose stone or concrete fill or other man made obstructions to the normal progress of the excavation, other than utility lines, shall be classified as "Removing Unforeseen Obstructions." The removal shall be paid for at actual cost plus 10%, as provided in the General Conditions.

A8 Pumping and Bailing

The Contractor shall, at his/her own expense, pump, or otherwise remove any water which may exist in the trenches and shall form all dams to other work necessary for keeping the excavation clear of water during progress of the work. In case of running sand or other bad ground, the work shall proceed day and night if the Engineer so directs.

A9 Special Requirements for Division of Environmental Health of Minnesota Department of Health

Watermains crossing house sewers, storm sewers, or sanitary sewers shall be laid to provide a separation of at least eighteen inches (18") between the bottom of the watermain and the top of the sewer. When local conditions prevent a vertical separation as described, the following construction shall be used:

1. Sewers passing over or less than eighteen inches (18") below watermains shall be constructed of materials equal to watermain standards of construction.

2. In addition, sewers passing over watermains shall be protected by providing:
   a. A vertical separation of at least eighteen inches (18") between the bottom of the sewer and the top of the watermain.
   b. Adequate structural support for the sewers to prevent excessive deflection of joints and settling on and breaking the watermains.
   c. That the length of water pipe be centered at the point of crossing so that the joints will be equidistant and as far as possible from the sewer.

Watermains shall be laid at least ten feet (10') horizontally from any sanitary sewer, storm sewer, or sewer manhole, whenever possible. When local conditions prevent a horizontal separation of ten feet (10'), a watermain may be laid closer to a storm or sanitary sewer provided that:

1. The bottom of the watermain is at least eighteen inches (18") above the top of the sewer.

Where this vertical separation cannot be obtained, the sewer shall be constructed of materials and with joints that are equivalent to watermain standards of construction and shall be pressure tested to assure water tightness prior to backfilling.

C2 Residential Services

It shall be the duty of the Contractor to cooperate with the City to keep accurate records of service connections as to location, depth to top of connection, size of connection provided and other pertinent data. Tap location shall be made in respect to the nearest manhole or hydrant from the service. Curb stops shall be located as shown on the detail drawings and shall be tied to houses or other existing structures. This record shall be kept jointly by the Engineer. Water services shall be located at least ten feet (10') measured horizontally, away from existing sanitary sewer services and for the most convenience to the benefited property.

The Contractor shall install a ten foot (10') length of copper service line on the outlet side of the curb stop as part of the service installation. The stub shall be pinched or peened closed to prevent particle intrusion at the time of sizzling the service. Tail should be shown and length noted on the plan sheets.

The Contractor shall make all taps into the watermain at an angle of forty-five degrees (45°) from horizontal and install corporation stops. Copper service pipe shall be installed continuous without joints between the corporation stop on the watermain and the curb stop, allowing approximately twelve inches (12") of slack for possible settlement.

All copper service taps shall be made with main line under normal static pressure ("wet".)

No water service will be installed within ten feet (10') horizontally from a manhole.

C3 Temporary Water Service

The Contractor shall furnish and install temporary water services to each home or business affected by the replacement of the existing watermains as noted on the plans.

Typically, the main distribution line should be a minimum of two inches (2") diameter and the connection to each house a minimum of one inch (1") diameter and can be made at the house hose bib. The pipe and fittings may be polyethylene in accordance with AWWA C901-78, or polybutylene in accordance with C902-78, or other pipe materials allowed by the local building code, or otherwise approved by the Engineer. Piping such as garden hoses is not approved. Pipe joints shall be welded, fused or joined in other methods approved by the local building code. Pipe shall be installed with a minimum bury of twelve inches (12") to help prevent interruption of service where crossing traffic could be anticipated, unless other means are proposed by the Contractor for protection. Prior to installation of any temporary water service, the Contractor shall submit to the Engineer for his review and approval, a plan showing details of connections, operations and other details that will meet this specification.

Each service connection must also include a split spigot (Brass), compression coupling with set screw, a vacuum break and back flow preventor, installed at the house connection, unless other means are proposed by the Contractor. A shut off valve shall be provided to each service line. The shut off valve and a back flow preventor shall be located at the distribution line. Any other provisions of the local building code must also be adhered to. Minimum pressure at the house connection for any temporary service is sixty pounds per square inch (60 p.s.i.). The maximum allowable pressure for a temporary water service connection to any house shall be ninety pounds per square inch (90 p.s.i.). If needed, a pressure-reducing valve shall be installed at each house connection. The temporary water service pipes must be disinfected in accordance with the watermain specification prior to connection to the houses. Temporary water services shall be

maintained by the Contractor for the time they are required, and promptly removed when the new watermain is approved for operation. Payment for temporary water services shall be made on a lump sum basis and shall be compensation in full for the materials and labor necessary for complete placement, operation and removal of all temporary water services required by this project.

C3 Temporary Water Plumbing

The Contractor shall coordinate all plumbing work required by the project construction. Plumbing work shall be preformed by a licensed plumber. The Engineer shall be notified prior to any plumbing work. A plumbing request form must be filled out prior to any plumbing work. Care should be taken to minimize disturbance of existing plumbing. Plumbing shall be returned to its original condition prior to construction following the removal of the temporary water service.

C4 Connection to Existing Facilities

Twenty-four hours (24 hr.) prior to connecting to existing watermains, the Engineer and the Utilities Department must be notified. Any residents who will be affected by the shutting off of water shall be given twenty-four hours (24 hr.) advance notice by the Contractor as to when and for how long service will be interrupted.

Prior to connecting to existing watermains, the Contractor shall have all labor, materials, and equipment on site and ready to do the work, so as to keep the shut-off time to a minimum. As soon as possible after completing the connection, the Contractor shall flush the new main to prevent any contamination of the existing facilities

The Contractor may be required to test existing facilities as part of the testing of the new construction. This may include flushing and/or repairing existing facilities that must be included in the test and are not capable of holding test pressures. The Contractor may also install a temporary valve for testing purposes. Work connected with the temporary valve shall be completed at the Contractor's expense.

D Setting Valves, Hydrants, Fittings and Specials

Gate valves and fittings: shall be placed where shown on the plans or as designated by the Engineer. Jointing shall be done as previously specified herein.

Unless otherwise specified or shown on the drawings, cast iron valve boxes shall be installed with all gate valves ten inches (10") or smaller. Valve boxes shall be firmly supported to maintain centered and plumb alignment over the wrench nut of the gate valve, with box cover flush with the surface of the finished pavement or at such other level as may be directed by the Engineer.

All valves as may be set in concrete valve manholes shall be positioned with the wrench nuts readily accessible for operation through the manhole openings. Manholes shall be constructed in a manner that will permit minor valve repairs and to afford protection to the pipe from impact where it passes through the manhole walls. The valve box and riser shall be a one (1) piece construction. The top extension shall be separated but, all shall be paid for in the unit cost for gate valve.

Hydrants: shall be placed where shown on the plans or where directed by the Engineer.

Hydrants shall be supported upon a 18" x 18" x 5"concrete base. Each hydrant is to be braced against the far end of the trench by a reaction block (18" x 18" x 5") placed vertically against the back of the trench against undisturbed soil. When retainer glands are used, hydrants must also be rodded back to the main line using $^{5}/_{8}$" minimum sized tie rods with a non-corrosive coating.

Hydrants of sufficient length shall be installed as to provide a minimum of seven and one half feet (7½') of ground cover over the top of the lead pipe. Hydrants shall be installed so that the breakaway flange is located within one inch (1") of finished grade. Hydrant nozzles shall be at least twenty-three inches (23") above finished grade.

Wherever a hydrant is set in soil that is pervious, drainage shall be provided at the base of the hydrant by placing coarse gravel or crushed stone mixed with coarse sand from the bottom of the trench to at least six inches (6") above waste openings in the hydrant and to a distance of one foot (1') around the base elbow.

Hydrant shall be set in a drainage pit two feet (2') in diameter and three feet (3') deep excavated below each hydrant base and filled compactly with coarse filter aggregate or crushed stone coarse sand, under and around the elbow and concrete base to a level of six inches (6") above the waste opening.
Cover all material placed for drainage with a minimum of two (2) layers of impervious material. No drainage system shall be connected to a sewer.

Hydrants must maintain their position and must not be displaced out of plumb during backfilling. Any hydrant out of plumb shall be excavated, reset (including blocking,) and rebackfilled.

All hydrant wrenches furnished by supplier shall become the property of the Owner.

E. Disinfection of Water Mains

Before being placed into service, the completed water main shall be disinfected, using the materials, procedures and the collection methods and testing requirements of samples in accordance with the provisions of AWWA C-651. After final flushing, the water shall be tested for bacteriologic quality and found to meet the standards prescribed by the Minnesota Department of Health.

1. When temporary watermains and water services are used, the following requirements must be met:
a. Piping used for temporary watermain shall meet the requirements of the Minnesota Department of Health (MDH). The temporary watermain shall be disinfected in accordance with AWWA C 651, with the exception that a minimum chlorine residual of 50 ppm shall be used. The watermain and service lines must be tested for bacteriological quality prior to use in accordance with AWWA Standard C 651.
b. The temporary water service piping shall be approved by the local administrative authority. The MDH requires that the temporary water service line meet the National Sanitation Foundation Standard 61. Otherwise, the service line material must meet the requirements of the Plumbing Code, Minnesota Rules, Chapter 4715, and must be approved by the manufacturer for above ground use. The temporary water service lines must be disinfected in accordance with either AWWA Standard C 651 (with the exception listed above), or the Minnesota Plumbing Code, Minnesota Rules, Chapter 4715.2250. The watermain and service lines must be tested for bacteriological quality prior to use in accordance with AWWA Standard C 651.

2. Disinfection of the watermain shall be performed according to AWWA Standard C 651. However, if the tablet or continuous feed methods are used, the completed watermain shall be disinfected for 24 hours with at least 50 ppm available chlorine, rather than 25 ppm, as specified in AWWA Standard C 651, with a residual of at least 10 ppm throughout the length of the main at the end of the 24-hour period.

3. Bacteriological testing of the watermain shall be performed according to AWWA Standard C 651, Section 5.1, following disinfection and final flushing, which requires that two consecutive sets of acceptable samples, taken at least 24 hours apart, be collected from the end of the new watermain, from each branch, and from every 1,200 feet of main.

Where any new watermain cannot be disinfected by the process above, all pipe and fittings proposed to be installed shall be disinfected prior to installation as follows:

1. The interior of the pipe and fittings shall be cleaned of all dirt and foreign material.

2. The interior of the pipe and fittings shall be thoroughly swabbed, sprayed or soaked with a 1 percent minimum hypochlorite solution to the satisfaction of the Engineer. This may require the Contractor to provide a bath structure to allow full immersion of all pipes and fittings into a chlorinated solution.

The Contractor shall furnish all materials and perform the disinfecting, flushing, and testing as necessary for meeting the water quality requirements.

F Electrical Conductivity Test

The system (pipeline and hydrants) shall be tested for electrical continuity and current capacity. The electrical test shall be made after the hydrostatic pressure and while the line is at normal operating pressure. Backfilling shall have been completed. The line may be tested in sections of convenient length as approved by the Engineer.

G Hydrostatic Testing of Watermains

After the pipe has been laid including fittings, valves, services and hydrants and the line has been backfilled in accordance with these specifications, all newly laid pipe, or any valved section thereof, unless otherwise directed by the Engineer, shall be subjected to hydrostatic pressure of 150 p.s.i.. The duration of each such test shall be at least two hours (2 hr) with no reduction in pressure permitted. <u>No water will be allowed to be added to the watermain to maintain the required pressure during watermain pressure testing</u>.

Where pressure testing is not possible, the Contractor shall allow the Engineer to visually inspect all pipe, valves, joints and fittings to the satisfaction of the Engineer. If it is determined after the visual test has occurred that the pipe, valves, joints or fittings leak, the Contractor shall be responsible for all costs, including restoration, to repair the leak.

The Contractor shall notify the engineer on site a minimum of four hours (4 hrs) prior to testing.

The City will not pay any additional amount to the Contractor for time spent in pressure testing mains and correcting leaks.

The City does not guarantee that the existing gate valves will maintain the pressure test requirement and, as an alternate, the Contractor will be required to plug the newly installed line and test separately each segment of line installed. All wet taps and/or cut-ins shall be tested separately and immediately prior to backfilling. Where hydrants are installed on service stubs, the hydrant can be used in the leakage test. On completion of test, all hydrants shall be pumped dry.

Each valved section of pipe shall be slowly filled with water and the specified test pressure, measured at the lowest point of elevation, shall be applied by means of a pump connected to the pipe in a satisfactory manner. The pump, pipe connection, gauges and all necessary apparatus shall be furnished by the Contractor. Gauges and measuring devices must meet with the approval of the Engineer and the necessary pipe taps made as directed. Before applying the specified test pressure, all air shall be expelled from the pipe. To accomplish this, taps shall be made, if necessary, at points of highest elevation, and afterward tightly plugged. All taps made for testing shall be at the Contractor's expense.

Any cracked or defective pipes, fittings, valves or hydrants discovered in consequence of the pressure test shall be removed and replaced by the Contractor with sound material in the manner provided and the test shall be repeated until satisfactory to the Engineer.

H1 Damage to Sanitary Sewer Services During Watermain Installation and Water Corporation Stops Left Turned Off

If any sanitary sewer service is damaged during the watermain Installation, it shall be repaired by the Contractor using stainless steel Ferncos at no cost to the City of Burnsville.

If any corporation stops are not turned on it will be the Contractor's responsibility to turn them on when the faulty work is discovered at no cost to the City.

The Contractor who is awarded this contract shall remedy the two above mentioned situations for a period of ten years following the date of contract.

2611.4 METHOD OF MEASUREMENT AND BASIS OF PAYMENT:

A Water Pipe

Ductile iron pipe: will be paid for at the contract price per linear foot for each diameter of pipe furnished, shall include the cost of furnishing the pipe, rubber gaskets, joints and other material and of delivering, handling, laying, trenching backfilling, testing and shop inspection when required and all materials and work necessary to install the pipe complete in place at the depth above specified.

The length of ductile iron pipe for which payment is made shall be the actual overall length measured per cut sheet length horizontal distance, without regard to intervening valves or specials.

Lengths of branches will be measured from the centers of connection pipes to centers of valves or hydrants.

Copper service pipe: will be paid for at the Contract unit price per linear foot, for each diameter of pipe furnished, measured from the centerline of the pipe to the centerline of the curb box plus one foot (1') for loop. Payment for augured water service will include only the length measured in feet augured.

B **Gate valves and boxes:** (including covers and extensions) will be paid for at the unit price bid for each size valve and box furnished and installed complete.

C **Corporation Stops:** will be paid for at the Contract unit price for each sized furnished and installed and shall include the tap or connection to the watermain.

C3 **Temporary Water Service:** will be paid for at the Contract unit price per lump sum in portions based on the work completed, in service and removed. This work shall include private plumbing work on buildings as necessary to allow for the temporary water service to be effective. It shall be paid to a total of one lump sum once all temporary water piping is removed.

D **Curb Stops and Boxes:** including extensions will be paid for at the Contract unit price bid for each size furnished and installed. Stationary rods will be used as called for on the plans.

E **Hydrants:** will be paid for at the Contract unit price per hydrant installed complete with drainage pit, gravel, concrete base and bracing. Hydrant extensions will be paid for at the Contract unit price.

G1 **Adjust Gate Valve:** shall be paid on existing gate valves when the gate valve is adjusted to the base course elevation and again when the gate valve is adjusted to the wear course elevation when the wear course is to be placed the following year. Adjust gate valve will only be paid once when the wear course is placed in the same year as the base course.

Adjust gate valve will be considered incidental to reconstruct and/or new gate valves when the gate valve is adjusted to the base course elevation and/or when the gate valve is adjusted to the wear course elevation when the wear course is placed in the same year as the base course. Adjust gate valve will be paid once for reconstruct and/or new gate valves when the gate valve is adjusted to the wear course elevation when the wear course is to be placed the following year.

All gate valves and gate valve manholes shall be adjusted to a final elevation of one-fourth inch (¼") to one half inch (½") below the grade of the roadway. If a wear course is to be placed the following year, the gate valve shall be adjusted for the base course and again for the wear course. Any structure not meeting the required tolerance shall be adjusted to the appropriate elevation at no cost to the owner.

In "Street Repair of Watermain Breaks and Contract Patching" if a broken, short of adjustment or immovable gate valve box is encountered the Contractor shall remove and furnish and install a new extension, box section and/or cover as needed. At the end of this project the Owner will deliver new castings to the Contractor as a fair trade for their parts. The adjust gate valve will be paid on unit price bid for each and the fair trade of parts will be considered full compensation for furnishing and installing the new extension, box section and/or cover.

G2 **Remove and Replace Valve Box Covers:** will be made at the Contract unit price bid for each and shall include all labor and materials required to remove and dispose of existing broken covers and furnish and install new covers meeting the requirements of 2611.2-C1.

G3 Remove and Replace Valve Box Section: will be made at the Contract unit bid price for each and shall include all labor and materials required to remove and dispose of existing broken, immovable or out of further adjustment valve box top sections and/or covers and to furnish and install new top sections meeting the requirements of 2611.2-C1. If an "adjust gate valve" is found with a broken, immovable or out of further adjustment valve box top section, the valve box top section it will become a "Remove and Replace Valve Box Section" paid for as such and deducted from the "adjust gate valve".

G4 Cutting into Existing Mains: will be included in the unit price bid for each cut-in fitting including sleeve if needed. Pressure taps will be paid for as complete installation including sleeve, valve, box and cover.

I Ductile and Gray Iron Fittings: will be paid for at the Contract unit price per pound as specified in the "American Nation Standard for Ductile-Iron and Gray-Iron Fittings, 3in. Through 48 in. for Water and Other Liquids". Payment shall not be made for retainer glands, gaskets, bolts or other accessories.

J Polyethylene Encasement: shall be considered incidental to the installation of watermain unless an item has been provided for in the bid proposal.

K Access Structures: Gate valves and manholes will be paid for at the unit price bid for each manhole with R-1733B cover bearing the word "WATER" on top, and for each size valve furnished and installed complete.

L Temporary Water Services: will be paid for at the Contract unit price bid as lump sum including all labor and materials required for all temporary water services required by the project.

M Connecting Existing Water Services: will be paid for at the Contract unit price bid for each connection. The Contract unit price shall include all labor and materials required to make the complete connections.

2621 - SANITARY SEWER, STORM SEWER, AND SANITARY SEWER SERVICES

2621.1 MATERIALS:

The Contractor shall submit in writing a list of materials to be furnished showing the manufacturer and designation of all items, said list to be approved by the Engineer prior to installation.

A2 Ductile Iron Pipe and Fittings: shall be of the class as indicated on the Plans.

A3 Reinforced Concrete Pipe and Fittings: shall be of the class shown on the plans with watertight Bureau of Reclamation Type R-4 Joints and confined O-Ring gasket. If no class of pipe is shown on the plans, contractor shall use Class V.

A4 Corrugated Steel Pipe and Fittings: All pipe sizes 54" and larger shall have 3" x 1" corrugations with straight corrugation riveted seam. Gauge thickness for pip installed by trench conditions shall be as follows:

12"-48"	16 Gauge
54"-72"	14 Gauge

78”-144”	12 Gauge

Coupling bands shall be corrugated annular band 12” minimum width with stainless steel nuts, bolts and washers.

A5 Polyvinyl Chloride Pipe and Fittings: shall be SDR 35 for mains and services unless otherwise indicated.

A9 High Density Polyethylene Pipe and Fitting Material: shall be 100% virgin resin. High density polyethylene (HDPE) corrugated pipe shall have a smooth interior waterway and be integrally formed. 12 to 60 inch diameter nominal pipe sizes are acceptable under this specification. Pipe furnished under this specification shall comply with the requirements for materials, test methods, dimensions and marking in accordance with the current issue AASHTO M-294 (Type S) 12"-48" diameters and AASHTO MP7 (Type S) 60" diameter. Type S pipe shall consist of a corrugated exterior and an essentially smooth interior wall. All HDPE pipe material furnished shall be Plastic Pipe Institute (PPI) Certified to the above referenced standards. Standard pipe lengths shall be 20 feet. Pipe connections shall be cemented into the doghouses of concrete drainage structures.

The pipe lengths shall be connected using a gasketed, bell and spigot joint. This shall consist of a factory installed, gasketed double bell polyethylene coupling, a factory welded bell or integral bell. The spigot end of the pipe shall be furnished with a factory installed elastometric profile rubber gasket that meets ASTM F477. Joints shall meet or exceed the requirements of the ASTM D3212 10.8 p.s.i. hydrostatic lab test, and the ASTM F1417 3.5 p.s.i. field air test.

Pipe with bell and spigot joints shall be shipped with removable wrap to protect the gasket. Lubrication shall be provided to the joint prior to joining pipes. At least two (2) corrugations of the spigot end must insert into the bell end.

Post installation testing shall be conducted by the Contractor on 25% of the storm sewer system at segments chosen by the Engineer no less than thirty days after installation. If any segments fail post installation testing, the Engineer, at his discretion, may require contractor to perform post installation testing on any additional segments or all of the remaining system. Pipe failing post installation testing shall be considered unacceptable.

For pipe diameters up to 24 inches, post installation testing shall be performed using a nine-point mandrel approved by the Engineer or by television camera. The mandrel must be pulled through the pipe by non-mechanical means.

For diameters including and larger than 24 inches, the contractor has the option of performing post installation testing by mandrel, physical measurement, or television camera.

I Precast Segmental Blocks: the lower portion of manholes over large diameter pipe and shallow manholes and catch basins may be constructed using 8” precast segmental radial blocks if approved by the Engineer. The blocks shall be manufactured in conformance with ASTM C139.

J Trash Guard: shall be installed where shown on the plans. Trash guard shall be installed in accordance with the details. The trash guard shall have $^{5}/_{8}$” vertical hot-dipped galvanized steel rods place six inches (6”) center to center unless otherwise specified. The guard shall be securely attached to the end section. The Contractor may submit in writing an alternate method or trash guard to the Engineer fourteen (14) days prior to construction.

2621.3 CONSTRUCTION REQUIREMENTS:

A2 Pipe Laying Operation: deviation from the pipe grade, as provide by the Engineer, in excess of 0.05 percent may be cause for removal and relaying of the pipe by the Contractor with no additional compensation allowed therefore.

B Appurtenance Installation: tying of the last three sections of all aprons and outfall lines shall be considered incidental with no additional compensation allowed therefore.

C1 House Services: It shall be the duty of the Contractor to cooperate with the City and keep an accurate record of service connections as to location, depth to top of connection, type of connection provided, etc. Location shall be made with respect to the nearest manhole center down grade from the service. This record shall be kept jointly by the Contractor and Inspector. Sewer services shall be located at least ten feet (10'), measured horizontally, away from existing water services and for the most convenience to the property.

At all points, unless otherwise designated by the Engineer, the Contractor shall construct four inch (4") PVC for house connections and shall extend such connections to the property line.

Whenever possible, house connections shall be kept to a maximum depth of ten feet (10') over the top of the pipe in the street and not less than nine feet (9') over the top of the pipe at the curb line and shall extend on a straight line grade to the property line unless otherwise directed by the Engineer.

Where the depth of cover over the top of the sewer pipe in the street is twelve feet (12') or more, the Contractor shall construct the service connections up the side of the trench to a depth of cover over top of pipe ten feet (10') and extend the service horizontally to the property line with depth of cover over top of pipe of nine feet (9') at the curb line as described above.

All house connections shall be capped and sealed with cast iron stoppers in place or other methods approved by the Engineer which will prevent any water entering the sewer until the connection is placed in service.

The Contractor shall provide all necessary wyes or approved fittings for connecting services to sewer pipe and provide necessary bends to bring services to the proper location and elevation. These items will be paid for at the contract unit bid price.

At the end of all house connections, the Contractor shall install at no additional compensation steel fence posts furnished by the Owner, set vertically to within three inches (3") of the ground surface on a developed lot or at least three feet (3') above ground on an undeveloped lot.

D Manhole and Catch Basin Structures: Where concrete block manholes or catch basins are permitted, all external surfaces shall be plastered with ½" coat of Portland Cement Mortar. Plastering mortar shall consist of one part cement and three parts suitable plaster sand. Mortar for laying concrete block shall consist of one part Portland Cement and two parts sand. Lime or mortar mix shall be used in amount necessary to make suitable mixture but shall not exceed 15% by volume within:
Stems shall be installed on all structures with a total depth in excess of 4' and aligned over the downstream side of the structure within:

1” +/- horizontal alignment
1” +/- vertical alignment with 16” spacing.

Catch basins under curb and gutter shall be installed to an alignment deviation of less then (0.20’) with the top slab centered over the base. Deviations greater then 0.20’ shall be corrected by the contractor by moving the base to its proper location. In the event that a catch basin location must be adjusted and the grade stake shows the contractor to be in error or the grade stake has been destroyed, the contractor must make the correction at his own expense.

F **Sanitary Sewer Leakage Testing:** where required, infiltration testing shall be accomplished using ninety (90) degree V-notch weirs placed in the lines. The Contractor shall furnish the weirs, other materials, and labor for placing, assisting the Contraction Observer in making the measurements, and removing the weirs.

F1 **Air Test Method:** the Sewer pipe section under test shall be clean at the time of testing but, the pipe may be wetted. Pneumatic balls shall be used to plug the pipe ends at manholes. Low pressure air shall be introduced into the plugged line until the internal air pressure reaches 5.0 p.s.i. greater than the average back pressure of any ground water pressure that may submerge the pipe. At least two minutes shall be allowed for the air temperature to stabilize before readings are taken and the timing started. During this time the Contractor shall check all plugs with soap solution to detect plug leakage. If plugs are found to leak, air shall be bled off, the plugs shall be retightened, and the air shall be reintroduced into the line.

The sewer section under test will be accepted as having passed the air leakage test if it does not lose any pressure within the five (5) minute test pressure.

The gauge used for air testing shall have a 4” minimum face diameter with a 270-degree sweep. The gradations on the gauge face shall be marked in 0.01 p.s.i. increments. Total range shall be 0 to 10 p.s.i.

F2 **Hydrostatic Test Method:** after bulkheading the test section, the pipe shall be subjected to a hydrostatic pressure produced by a head of water at a depth of three (3) feet above the invert elevation of the sewer at the manhole of the test section. In areas where ground water exists, this head of water shall be three (3) feet above the existing water table.

The water head shall be maintained for a period of one hour during which time it will be presumed that full absorption of the pipe body has taken place, and thereafter for an extended period of one (1) hour the water head shall be maintained as the test period. During the one (1) hour test period, the measured water loss within the section, including service stubs, shall not exceed the Maximum Allowable Loss (in Gallons per Hour per 100 feet of Pipe) given below for the applicable Main Sewer Diameter.

Main Sewer Diameter (in inches)	**Maximum Allowable Loss* (in Gallons per Hour per 100 feet)**
6	0.25
8	0.30
10	0.40
12	0.50
15	0.60

18	0.70
21	0.85
24 & Larger	0.95

*Based on 50 Gallons per Day per Pipe Diameter Inch per Mile

If measurements indicate exfiltration within a test action section is not greater than the allowable maximum, the section will be accepted as passing the test.

G **Deflection Test:** The deflection test shall be completed per the 1999 CEAM specifications a minimum of 30 days after the sewer pipe has been in place.

I **Infiltration and Inspection:** upon completion of the sewer construction and before any house services are connected, leakage tests shall be made to determine the amount of ground water infiltration into the sewers. Measurements will be taken by means of 90-degree V-notch weirs placed in the lines. Measurements shall be taken at all points where in the opinion of the Engineer the flow of the water in the sewers is greater than the maximum allowable leakage. The maximum allowable rate of leakage shall be as follows:

The infiltration shall not exceed fifty (50) gallons per inch of pipe diameter per mile per day for any section of the system.

In case measurements indicate a leakage greater than the maximum allowable leakage, additional measurements shall be taken and continued until all leaks are located and the necessary repairs and corrective work have reduced the leakage in the section being tested below the maximum allowed by the specifications.

The Contractor shall furnish the weirs and other material and labor for placing the weirs in the sewer and shall assist the Engineers in taking measurements. The Contractor shall receive no additional compensation for the leakage test or corrective work necessary to reduce leakage below the maximum allowed by the specifications.

Upon completion of the contract, the Engineer will carefully inspect all sewers and appurtenances. Any cracked or broken pipe shall be removed and replaced with sound pipe and the invert of the sewer shall be left clean from any obstructions throughout the entire area.

2621.5 BASIS OF PAYMENT:

Sewer pipe payment shall be made as per the Standard Utility Specification except that sewer pipe footage will be limited to 80% of the actual amount installed until all pipe has been tested, accepted and backfilled to subgrade.
The cost of removal and disposal of all miscellaneous structures and excess material and all costs connected therewith shall be considered incidental to the project unless noted in the plans, specifications, or special provisions.

Ductile iron pipe shall be paid for at the contract price per lineal foot, for each diameter of pipe furnished, and according to depth zone classification. Unit prices shall include excavation, pumping, sheeting and backfilling of pipe completely installed. All measurements will be made along the centerline of the pipe and from center of manhole to center of manhole or center to center of appurtenant structures. Depth zone classification shall be based on total depth of trench from the surface of the ground to the invert of the sewer, except where the Engineer orders extra

depth to assure a firm foundation for the pipe, in which case payment will be made at the unit price according to the depth of the trench of the upper limit but, not the lower limit. As an example: 8' -10' classification shall be taken from 8.01' to 10.00' inclusive. No deduction in depth will be made for rocks encountered in the trench above the designated grade.

Connecting to existing sewer mainline shall include excavation to locate the existing line prior to staking of upstream manholes and sewer alignment and all associated time delays.

Special sections will be paid for at the contract price on a lump sum basis for all work and materials necessary for the complete installation or construction.

Wyes, tees and special fittings will be paid for at the contract unit price per pound for each unit furnished of the size and classification specified on the proposal.

Payment for any and all fittings related to the construction and installation of PVC and HDPE storm sewer shall be incidental to the bid price per lineal foot of pipe.

Drop section for inside or outside drop manholes shall consist of a ductile iron 90-degree bend, a ductile iron tee, and length of ductile iron pipe as may be required, including concrete base and pipe support. Payment will be at the contract unit price for vertical feet of drop section from center of incoming line to center of outlet of 90-degree bend. Inside drops shall be strapped to the manhole wall with 14 gauge stainless steel straps, two feet (2') on center. All ductile iron pipe and stainless steel straps within the manhole shall be painted with two coats of inertolpoxitar. A full length of ductile iron pipe shall be installed from the tee so as to lay on undisturbed earth. Payment will be at the contract unit price for lineal feet of ductile iron pipe at the appropriate depth class.

Risers for drop manholes consist of ductile iron pipe support and will be paid for at the contract unit price per lineal foot.

Flared End Section for storm sewer pipe payment shall be at the unit price bid for each diameter specified on the plans and include all labor and materials to furnish and install the pipe, trash guard, and piling as shown on the plans.

PART C: PRESSURE REDUCING STATION SPECIFICATIONS

PART 1 -- GENERAL

1.1 SUMMARY

A. This section covers the furnishing of all labor, materials, tools, equipment and performances of all work and services necessary or incidental to construction of the pressure reducing station as indicated on the drawings or as specified herein.

1.2 METHOD OF PAYMENT

A. Payment for all materials, equipment, supplies and labor required to construct a fully operational pressure reducing station, complete, shall be at the lump sum bid price of the pressure reducing station. The bid amount includes all work and material required to complete the structure and operating equipment, as specified.

B. The furnishing and installing of specific items and/or the performance of work under certain circumstances shall not be individually paid. The costs shall be included in the price bid for the pressure reducing station, as indicated. Such items of work include but are not limited to:

1. Interference of other underground structures and utilities:

    a. The removal and restoration, or protection of existing utilities which are shown on the plans and for which there is no bid item for removing and restoring, or working around the utility.

2. Unless separately itemized in the Schedule of Unit Prices, any dewatering necessary pressure reducing station construction.

3. Foundation materials placed in lieu of performing necessary dewatering.

4. Locating and connecting to an existing water main.

5. Maintenance of service.

6. Establishing the foundation for the structure or placing rock to stabilize the subgrade.

7. The replacement of all material displaced due to shrinkage or loss during the excavation and backfilling operations.

8. Delays due to other utility conflicts which result during the course of construction.

9. Protecting existing improvements from damage.

10. Protecting the inverts of other utility pipes from the accumulation of debris and soil, the removal of blockages which threatens to damage property, and/or the cleaning of both the newly constructed lines and the existing lines of all debris and soil which accumulated during the construction.

11. As specified elsewhere in these Specifications, all equipment, labor, materials, supplies, fees and permits to construct a full and operable system.

1.3 SPECIFICATION REFERENCES

A. Unless noted otherwise, the provisions in this section are in addition to the referenced specification.

1.4 SUBMITTALS

A. Shop drawings of the pressure reducing station construction shall be submitted prior to their fabrication.

PART 2 -- PRODUCTS

2.1 PIPE AND FITTINGS

A. Ductile Iron Pipe (DIP)

1. Ductile iron pipe shall conform to the requirements of ANSI A221.51 (AWWA C151) standard specification for centrifugally cast ductile iron pipe for water or other liquids.

2. Ductile iron pipe in exposed locations shall be provided with flanged fittings and in buried locations shall be provided with mechanical joint type ends as shown on the plans. All ductile iron piping shall be ANSI/AWWA thickness Class 53 (minimum).

3. Ductile iron flanges shall conform to ANSI/AWWA C115 standard 125# template and shall be rated for 250 psi. Mechanical joints and push-on joints shall conform to ANSI/AWWA C111 standard for rubber gasket joints for ductile iron and gray iron pressure pipe and fittings.

4. Unless otherwise shown on the plans, ANSI/AWWA short-body ductile iron fittings shall be furnished. Short body fittings shall conform to ANSI/AWWA C110. Flanged long radius elbows, reducing on-the-run tees, side outlet fittings eccentric reducers and laterals shall conform to ANSI B16.1 standard specification for flanged fittings and flanges. All fittings shall be ductile iron.

2.2 BOLTS AND ANCHOR BOLTS

A. Bolts and anchor bolts shall conform to ASTM A307, grade B. ASTM A36 bar stock shall be considered an acceptable alternative for anchor bolts. Interior bolts and nuts shall be zinc plated.

2.3 INTERIOR GATE VALVES

A. All valves furnished and installed on the force main shall be AWWA C-509-80, flanged, non-rising stem, iron body, resilient-sealed gate valves, with two-inch square opening nut rated for a 200 psi working pressure. All valves shall open left.

B. Resilient seated gate valves shall consist of a gate with a bonded elastomer seat. Valves shall be rated for bubble tight seal in both directions at a 200 psi pressure differential. Stem shall be rising type with hand-held or shaft extension and floor-mounted operating stands as indicted. The stem shall be corrosion resistant threaded bronze stem and shall be used with a bronze stem nut. All cast iron or ductile iron internal parts shall be coated with a corrosion resistant epoxy coating. All internal parts shall be accessible without removing the valve body from the piping.

C. Provide manually operated hand wheel operators as shown on drawings.

2.4 FLANGED COUPLING ADAPTERS (FCA)

A. Flanged coupling adapters shall be provided where indicated. FCA and piping shall be secured against movement with fixed supports or tie rods. FCA shall be Dresser Style 127, Rockwell/Smith-Blair Type 912 with anchor studs for 12 inches and under; Type 913 for 14 inches and over. Coupling Adapters shall be of cast iron construction with shop coating.

2.5 PRESSURE GAGES

A. Pressure gages shall be provided on the discharge piping downstream of the check valves.

B. Gages shall be industrial quality type with 0-160 psi Type 316 stainless steel movement and stainless steel or alloy case. Unless otherwise shown or specified, gages shall have a 3-1/2 inch dial, 1/4-inch threaded connection, a Type 316 stainless steel snubber adapter, and a shut-off valve. Gages shall be calibrated to read in psi or feet of water, with an accuracy of one percent. Ranges required for each pressure indicator or application are to be determined at the shop drawing submittal time and are intended to be standard ranges. All gages shall be vibration and shock resistant. Gages without diaphragm seal shall be liquid filled to dampen pulsation and vibration.

C. Gauges shall be equipped with diaphragm type isolator units with 1/4-inch flushing connections unless noted otherwise. Isolator shall have: stainless steel diaphragms for pressure over 15 psi; elastomer diaphragm for pressures of 15 psi and below; and glycerine and water filling medium. Diaphragm seal shall be manufactured to Ashcraft, Model 101; Marshalltown, series 225-01 or equal.

D. Gage Manufacturers or Equal:
   1. Marsh Instrument Company
   2. Ashcraft Industrial Instruments (Dresser)
   3. Foxboro/Jordan, Inc.
   4. Marshalltown Instruments, Inc.

2.6 VALVE VAULT

A. Precast Concrete Structure

   1. The pressure reducing station structure shall be constructed precast reinforced concrete per ASTM C-478/890/913/990 and have dimensions as shown on the plans. The structure shall be constructed as shown on the detail drawings and in accordance with the approved shop drawings. The concrete mix shall be 3A34 (Type 3 concrete with entrained air content of not less than 4 percent and not more than 7 percent, Grade A concrete with a

cement-void ratio of 0.50 and a minimum compressive strength of 4,000 psi at 28 days). The exterior and interior space at each joint shall be filled with mortar after the joint has been made. Mortar shall consist of two parts of Portland cement and five parts of sand, with just enough water added to make a workable mortar of proper consistency.

2. The top slab of the structures shall be Type II precast reinforced concrete having the dimensions shown on the detail drawings. All joints shall be sealed and the completed reinforced concrete construction shall be watertight. Frames and channel drains for access hatches shall be cast in the slab when fabricated. Cut-outs to accommodate all piping entering the wetwell shall be preformed or pre-cut and provided with an AWWA approved link seal to ensure a watertight connection between pipe and structure. The type of seal proposed shall be submitted to the Project Engineer for approval before installation.

3. Aluminum or stainless steel manhole steps shall be provided in the structure.

2.7 ACCESS HATCHES.

A. Door leaves a minimum 1/4-inch aluminum, diamond pattern, to withstand a live load of 300 pounds per square foot.

B. Angle frame of minimum 3-inch welded aluminum with anchor flange around the perimeter.

C. Each door leaf equipped with heavy duty recessed hinges, totally enclosed spring or torsion bar operators as necessary for easy operation, drop handle, and automatic hold open arm with release handle. Locate hold open arm release handle such that it can be easily operated without endangering personnel.

D. Maximum hatch opening force is not to exceed 15 pounds when applied perpendicularly to the hatch edge through any part of the hatch-operating arc.

E. Each door leaf secured with snap lock with removable handle and padlock hasp welded to each leaf and frame.

F. Aluminum surfaces mill finished. Apply bituminous paint to the exterior of the frame in contact with concrete.

G. Mechanical Fasteners and Hardware: Series 300 stainless steel.

2.8 PRESSURE REDUCING VALVES

Equipment Requirements:

Pressure reducing valves shall be designed to maintain a constant downstream pressure regardless of fluctuations in demand. When the upstream pressure becomes equal to the spring setting of the pressure sustaining control, the valve throttles to maintain a constant inlet pressure. If the downstream pressure is greater than the upstream pressure the valve closes automatically to prevent return flow. Valve shall be equipped with a built-in lift type check feature to prevent reverse flow.

This valve shall be a hydraulically operated, diaphragm-actuated, globe valve. It shall contain a resilient, synthetic rubber disc, having a rectangular cross-section, contained on

three and one-half sides by a disc retainer and forming a tight seal against a single removable seat insert. The diaphragm assembly containing a valve stem shall be fully guided at both ends by a bearing in the valve cover and an integral bearing in the valve seat. This diaphragm assembly shall be the only moving part and shall form a sealed chamber in the upper portion of the valve, separating operating pressure from line pressure. The diaphragm shall consist of nylon fabric bonded with synthetic rubber and shall not be used as a seating surface. Packing glands and/or stuffing boxes are not permitted and there shall be no pistons operating the valve or pilot controls. All necessary repairs shall be possible without removing valve from the line.

The pressure reducing pilot control shall be a direct-acting, adjustable, spring-loaded, normally open diaphragm valve, which closes when downstream pressure exceeds the spring setting.

Valve Body: The valve shall be a globe-pattern cast iron body with flanged ends with ANSI rating of 125 psi. All interior passages of valve with water shall be epoxy coated as specified in Section 09900 "Painting". The valve trim shall be stainless steel.

Provide 4 hours of start-up services and operator training. Pressure reducing pilot valve shall be set to maintain a downstream pressure as directed by the Owner.

Manufacturers or Equal:

For the 8" Pressure Reducing Station the specified valves are as follows:

8" Cla-Val Model 690G-01BCPSVYKCKGKX Reduced Port Pressure Reducing Valve, ductile iron, stainless steel internal trim, 150# ANSI flanges, with isolation valves, opening and closing speed controls, X101 valve position indicator, 4" pressure gauges on inlet and outlet of valve, "Y" strainer, fused epoxy coating inside and out (KC), delrin sleeve on internal stem (KG), poly lines for pilot controls (KX), and 20-105psi CRD.

3" Cla-Val Model 690G-01ABCPSVKCKGKX Reduced Port Pressure Reducing Valve, ductile iron, stainless steel internal trim, 150# ANSI flanges, with inline strainer, isolation valves, opening and closing speed controls, X101 valve position indicator, 4" pressure gauges on inlet and outlet of valve (P), fused epoxy coating inside and out (KC), delrin sleeve on internal stem (KG), poly lines for pilot controls (KX), and 20-105psi CRD.

For the 16" Pressure Reducing Station the specified valves are as follows:

16" Cla-Val Model 690G-01BCPSVYKCKGKX Reduced Port Pressure Reducing Valve, ductile iron, stainless steel internal trim, 150# ANSI flanges, with isolation valves, opening and closing speed controls, X101 valve position indicator, 4" pressure gauges on inlet and outlet of valve, "Y" strainer, fused epoxy coating inside and out (KC), delrin sleeve on internal stem (KG), poly lines for pilot controls (KX), and 20-105psi CRD.

6" Cla-Val Model 690G-01ABCPSVKCKGKX Reduced Port Pressure Reducing Valve, ductile iron, stainless steel internal trim, 150# ANSI flanges, with inline strainer, isolation valves, opening and closing speed controls, X101 valve position indicator, 4" pressure gauges on inlet and outlet of valve (P), fused epoxy coating inside and out (KC), delrin sleeve on internal stem (KG), poly lines for pilot controls (KX), and 20-105psi CRD.

2.9 PIPE SUPPORTS

A. Provide pipe supports as shown on the plans.

2.10 SAND BACKFILL AND ENGINEERED FILL

A. Water from areas to receive sand backfill shall be removed before commencing work, and areas shall be kept free of water during filling and compaction. All topsoil and organic materials in any area to receive Engineered Fill shall be removed to a minimum depth of 12 inches.

B. Where concrete floor slabs are to be supported on Engineered Fill, the entire surface of the fill area shall be smoothed, leveled, and compacted using heavy vibratory equipment until there is no loss of elevation. The sand fill material shall be placed in 6" deep lifts and compacted to at least 100% of the maximum density given by ASTM D698 (Standard Proctor Density). The fill shall extend beyond the edges of the footings one foot for each one foot of fill placed below the footings. The compacted lift shall be relatively smooth and level.

C. Frozen material or material containing ice or snow shall not be used for fill. Sand fill shall not be placed on soil that is frozen or covered with ice or snow. Necessary precautions shall be taken during freezing weather to prevent freezing of the sand fill during placing and compaction

D. All debris shall be removed from the excavated areas before backfilling.

E. Excavations shall be promptly backfilled as work permits.

2.11 PAINTING

A. Contractor shall paint interior piping, valves, and fittings in accordance with Section 09900.

PART 3 -- EXECUTION

3.1 EXCAVATION

A. Interference of Underground Structures

1. If an existing utility is shown on the plans and there is no bid item for removing and restoring, or working around the utility, the Contractor is required to remove and restore, or protect the utility.

B. Excavation Limits and Requirements

1. The Contractor shall dewater the excavations as necessary to construct the station. Excavation may require shoring and sheeting to maintain stable slopes or facilitate dewatering.

2. The Contractor shall excavate to the limits required by safety and to adequately install the station structure. Oversize excavation one foot horizontally beyond the footing slab for each foot vertically that the excavation is below the footing. The area shall be protected from surface runoff.

C. Preparation and Maintenance of Foundation.

1. The Contractor shall undercut the foundation one foot, smooth and compact the existing subgrade. Any areas below the base of the structure shall be backfilled with crushed rock as shown on the plans.

3.2 BACKFILL

A. Placement of backfill adjacent to the structure shall be delayed until any field constructed concrete has attained its design compressive strength. Any backfill placement prior to attaining this strength shall be considered the responsibility of the Contractor, who shall be liable for any resultant damage to the structure.

****** END OF SECTION ******

PART D: PIPELINE STEEL CASING PIPE AND BORING AND JACKING SPECIFICATIONS

PART 1 GENERAL

1.01 SUMMARY

Section Includes:
- Cased Pipelines
- Non-cased Pipelines

Related Sections:
- Section 01025 – Measurement and Payment
- Section 01300 - Submittals
- Section 01600 – Material and Equipment
- Section 01700 – Contract Closeout
- Section 02225 - Trenching
- Section 02620 – Ductile Iron Pipe

1.02 REFERENCES

Reference Standards include:
- ANSI/AWWA C200 – Standard Specifications for Steel Water Pipe 6 Inches and Larger
- ANSI/AWWA C206 – Standard Specification for field Welding of Steel Water Pipe
- AWWA M11 – Steel Pipe – A Guide for Design and Installation
- AASHTO T99 - Standard Specification for Moisture-Density Relations of Soils Using a 2.49-kg (5.5-lb) Rammer and a 305-mm (12-in.) Drop
- ASTM D698 - Standard Test Method for Laboratory Compaction Characteristics of Soil Using Standard Effort (12,400 ft-lbf/ft3 (600 kNm/m3))
- ASTM D2922 - Standard Test Method for Density of Soil and Soil-Aggregate in Place by Nuclear Methods (Shallow Depth)
- ASTM D3017 - Standard Test Method for Water Content of Soil and Rock in Place by Nuclear Methods (Shallow Depth)
- ASTM A36/A36M - Standard Specification for Carbon Structural Steel
- ASTM A139 – Electric-Fusion (Arc) – Welded Steel Pipe (NPS 4 and over)
- ASTM A283 – Specification for Low and Intermediate Tensile Strength Carbon Steel Plates
- AWS D1.1 - Structural Welding Code – Steel

1.03 SUBMITTALS

Section 01300 - Submittal Procedures: Requirements for submittals.

Product Data: Provide data on casing pipe, fitting, casing spacers, end seals, and accessories.

Submit history of previous work completed of equivalent nature and scope. Include qualification and experience of key personnel.

Installation Plan: Submit description of proposed construction plan and plan to establish and maintain vertical and horizontal alignment.

Submit emergency response procedures to handle situations when conduit is compromised and jeopardizes integrity of installation or safety.

1.04 CLOSEOUT SUBMITTALS

Section 01700 - Execution Requirements: Requirements for submittals.

Project Record Documents: Record actual locations of casing pipe, connections, carrier pipe, and invert elevations.

1.05 QUALIFICATIONS

Installer: Company specializing in performing work of this section with minimum five years documented experience.
Work Experience: Include projects of similar magnitude and conditions.
Furnish list of references upon request.

1.06 DELIVERY, STORAGE, AND HANDLING

Section 01600 - Product Requirements: Requirements for transporting, handling, storing, and protecting products.

Protect piping from entry of foreign materials and water by temporary covers, completing sections of work, and isolating parts of completed system.

Support casing and carrier pipes with nylon slings during handling.

1.07 REGULATORY REQUIREMENTS

Conform to applicable permits issued by governing agencies for installation of the Work of this Section.

Contractor is responsible for obtaining a copy of applicable permits from the Engineer and retaining a copy of applicable permits at the bore site throughout the duration of the work.

Conduct operations so as not to interfere with, interrupt, damage, destroy, or endanger integrity of surface or subsurface structures or utilities, and landscape in immediate or adjacent areas.

PRODUCTS

1.08 MATERIALS

Steel Casing Pipe:
Material: Carbon steel.
Minimum Yield Strength: 35,000 psi.
Minimum Wall Thickness: The various sizes and locations of steel casing pipe shall have nominal wall thicknesses as shown below.

Carrier Pipe Size	Casing Pipe Size	Casing Pipe Thickness

(inches)	(inches)	(inches)
16	27	0.5

4. Steel for cylinder shall be 35,000 psi minimum yield strength conforming to requirements of appropriate grade: ASTM A36, A139, A283, A572, A607, A907, A935, or A936.

Jointing: Field welds by a certified welder in accordance with manufacturer's recommendations.

Accessories for Cased Bores

Casing Spacers: Stainless steel shell, 2.5 inch high molecular weight anti-corrosive coated runners.

Shall be designed to center carrier pipe inside of the casing pipe and shall prevent carrier pipe from floating.

Spacer configuration per Drawings.

Casing End Seals: Rubber boot seal with stainless steel clamps.

Accessories for Non-cased Bores

Polyethylene encasement (High Density Cross-Laminated) per Specification 02620

1.09 CARRIER PIPE MATERIALS

Refer to the following sections for carrier pipe materials:

Section 02620 – Ductile Iron Pipe

EXECUTION

1.10 EXAMINATION

Verify that excavation base is ready to receive work and that excavations, dimensions, and elevations are adequate for proper installation of utilities.

Verify location and elevation of existing utilities.

1.11 PREPARATION

Identify required lines, levels, contours, and datum locations.

1.12 PITS OR APPROACH TRENCHES

Excavate approach trenches or pits in accordance with Section 02225 Trenching.

Contractor shall observe all OSHA requirements for trench safety.

1.13 INSTALLATION

General:

The boring machine shall be operated so as to prevent either surface heave or loss of ground during boring and shall be steerable and capable of controlling the advance of

the heading to maintain line and grade within the tolerances specified in the paragraph 3.06 entitled “Settlement, Alignment, and Tolerances”.

Each pipe casing section shall be jacked forward as the excavation progresses in such a way to provide complete and adequate, ground support at all times.

Cased Bore:

Casing pipe shall be installed by a trenchless method appropriate to the application.

The casing shall be installed to the lines and grades required to maintain specified elevation for utilities, provide recommended utility and other clearances as outlined in applicable permits from governing agencies, and have a minimum of 6.0 feet of cover at all locations, unless otherwise indicated on the Drawings.

In areas where limited amount of right-of-way is available, half lengths of casing pipe of ten (10) feet may be required to limit size of bore pit.

Distance measured normal from facing walls of boring and receiving pits shall not be less than 4 feet less than the total length of the casing pipe.

Use tools and equipment of adequate size and capacity for installing casing pipe to insure work will proceed continuously until complete.

Steel pipe casing joints shall be continuously welded with butt joint per AWS D1.1. The welds shall attain the full strength of the pipe and shall result in a full watertight section. The inner face of the internal weld shall be flush with the pipe to facilitate the installation of the conveyance pipe in the pipe casing.

Construct, sheath, and brace pits as necessary to provide safe work place.

Casing spacers shall be placed on carrier pipe per manufacturer's instructions to ensure centering of carrier pipe within casing pipe as shown on Drawings.

Ends of casing pipe shall be sealed as shown on Drawings.

Backfilling of boring pits shall conform to Section 02225.

Non-cased Bore:

Pipe shall be installed by a trenchless method appropriate to the application.

The pipe shall be installed to the lines and grades required to maintain specified elevation for utilities, provide recommended utility and other clearances as outlined in applicable permits from governing agencies, and have a minimum of 6.0 feet of cover at all locations, unless otherwise indicated on the Drawings.

Wrap pipe with two layers of polyethylene encasement.

Use tools and equipment of adequate size and capacity for installing pipe to insure work will proceed continuously until complete.

Construct, sheath, and brace pits as necessary to provide safe work place.

Backfilling of boring pits shall conform to Section 02225.

1.14 FIELD QUALITY CONROL

General:

All work under the contract shall be done to the lines and grades indicated in the contract documents or prescribed by the Engineer. So that lines and grades may be furnished with a minimum of inconvenience to the Engineer and of delay to the Contractor, the Contractor shall provide the Engineer with reasonable, advanced notice of the times and locations of proposed work. At the request of the Engineer, the Contractor shall, without charge, provide labor, material, tools and equipment, to temporarily assist the Engineer in determining measurements, surveys and reference marks.

It may be necessary at times that portions of the Contractor’s work be discontinued for brief periods, in order that the Engineer may make measurements or surveys without

interruptions or other interference that might impair the accuracy of the results. At any time, on request of the Engineer, the Contractor shall discontinue his work to such extent as may be necessary for such purposes of the Engineer.

No direct payment will be made to the Contractor for work or delays associated with the establishment or checks of lines, grades or measurements. No extension of time will be allowed for such delays.

Field Tests and Inspections

The Contractor shall perform field tests, and provide labor, equipment and incidentals required for testing and inspections. The Contractor will provide evidence that any item of work is being or has been constructed in accordance with the drawings and specifications.

The Contractor shall use a horizontal directional drilling (HDD) tracking system to continuously monitor the line and grade during installation of the casing pipe to determine any deviations. The contractor shall verify the transmitter's readings prior to the start of the bore. The contractor shall check the accuracy of the transmitter's readings at forty (40) foot intervals by removing the augers and checking the line and grade of the cased pipe with a laser and a target mounted at the tunnel face.

1.15 SETTLEMENT, ALIGNMENT, AND TOLERANCES

Cased bores:

Settlement or heave of ground surface along centerline of boring alignments during and after installation of pipe casings shall not exceed one-half (½) inch.

Annulus between bore hole outside diameter and casing pipe outside diameter shall be less that 1-inch. The annular space created by overcut shall be filled with bentonite slurry.

High points which allow air to collect in pipelines will not be permitted unless an air release valve is indicated on the drawings at that location.

The casing pipe shall be installed to the vertical alignment shown on the plans. No more than one (1) inch vertical deviation shall be permitted in the position of the completed pipe casings. The Contractor at no additional cost to the Owner shall correct any deviation in the vertical alignment. Corrective measures may include boring a casing pipe in a new location or the addition of an air release mechanism as specified. The Contractor must obtain approval from the Owner and Engineer prior to implementation of any corrective measures.

The casing pipe shall be installed to the horizontal alignment shown on the plans. No more than five (5) inches horizontal deviation shall be permitted in the position of the completed pipe casings. In addition, multiple bores in the same vicinity shall maintain a minimum of six (6) inches of clearance between the casing pipes. The Contractor at no additional cost to the Owner shall correct any deviation in the horizontal alignment that results in the casing pipes colliding with one another. Corrective measures may include boring a casing pipe in a new location. The Contractor must obtain approval from the Owner and Engineer prior to implementation of any corrective measures.

The carrier pipe alignment shall be straight from one end of the bore to the other with no significant "dog legs" that will adversely affect the performance of the pipe.

All costs, losses, and damages associated with defective bore(s) will be paid by the Contractor, including but not limited to additional engineering time, compensation for removal of defective bore(s) in the future, filling the defective bore(s) with controlled density fill (CDF), damage to structures or property, and additional easement and right-of-way costs.

Non-cased bores:

Settlement or heave of ground surface along centerline of boring alignments during and after installation of pipe casings shall not exceed one-half (½) inch.

Annulus between bore hole outside diameter and pipe bell diameter shall be less that 1-inch. The annular space created by overcut shall be filled with bentonite slurry.

High points which allow air to collect in pipelines will not be permitted unless an air release valve is indicated on the drawings at that location.

The non-cased bore pipe shall be installed to the vertical alignment shown on the plans. No more than one (1) inch vertical deviation shall be permitted in the position of the completed non-cased pipe. The Contractor at no additional cost to the Owner shall correct any deviation in the vertical alignment. Corrective measures may include boring a noncased pipe in a new location or the addition of an air release mechanism as specified. The Contractor must obtain approval from the Owner and Engineer prior to implementation of corrective measures.

The non-cased pipe shall be installed to the horizontal alignment shown on the plans. No more than five (5) inches horizontal deviation shall be permitted in the position of the completed non-cased pipe. In addition, multiple non-cased bores in the same vicinity shall maintain a minimum of six (6) inches of clearance between the non-cased pipes. The Contractor at no additional cost to the Owner shall correct any deviation in the horizontal alignment that results in the casing pipes colliding with one another. Corrective measures may include boring a non-cased pipe in a new location. The Contractor must obtain approval from the Owner and Engineer prior to implementation of any corrective measures.

The carrier pipe alignment shall be straight from one end of the bore to the other with no significant “dog legs” that will adversely affect the performance of the pipe.

All costs, losses, and damages associated with defective bore(s) will be paid by the Contractor, including but not limited to additional engineering time, compensation for removal of defective bore(s) in the future, filling the defective bore(s) with controlled density fill (CDF), damage to structures or property, and additional easement and right-of-way costs.

END OF SECTION

SPECIAL PROVISIONS FOR

BURNSVILLE ROADWAY LIGHTING

BURNSVILLE, MINNESOTA

DIVISION SLC – ELECTRICAL LIGHTING SYSTEM

DIVISION SLC – ELECTRICAL LIGHTING SYSTEM

SLC-1	Compliance with Electrical Codes and Standards	1-SLC
SLC-2	(2545) Electrical System	1-SLC
SLC-2.1	Scope of Work	1-SLC
SLC-2.2	General	4-SLC
SLC-2.3	Shop Drawings and Submittals	4-SLC
SLC-2.4	Materials	4-SLC
SLC-2.5	Construction Requirements	10-SLC
SLC-3	Warranty	17-SLC
SLC-4	Asbuilt Drawings and O & M Manual	17-SLC
SLC-5	System Testing	17-SLC

I hereby certify that the Division SLC Special Provisions were prepared by me or under my direct supervision, and that I am a duly Registered Professional Engineer under the laws of the State of Minnesota.

J. E. Budke, PE

Date: 6/13/12 Registration No. 8943

SPECIAL PROVISIONS

DIVISION SLC

ELECTRICAL LIGHTING SYSTEM

SLC - 1 COMPLIANCE WITH ELECTRICAL CODES AND STANDARDS

Bidders are advised that the NEC and the 2005 addition of MN/DOT "Standard Specifications for Construction" shall govern. Compliance with provisions of MN/DOT 2545.2A, and the first paragraph of MN/DOT 2545.3a will be particularly enforced in conjunction with the construction of any kind or type of electrical system, conduit or conduit system for the conveyance of the electrical conductors, or the required portions thereof, as specified in the Contract. The Minnesota Electrical Act requires that a permit be obtained for the performance of all such work, including the installation of conduits. The Contractor shall obtain all necessary permits including, but not limited to, an electrical permit. Work shall be inspected and approved by the Engineer and the City of Burnsville.

Signal and Lighting Certification will be required for all Contractors, Supervisors or Foreman involved in the field installation of this Project. Signal and Lighting Certification, Level II, is available through the MN/DOT Technical Certification Program. Questions regarding certification or past certification may be directed to Technical Certification Coordinator at telephone (651) 297-7195.

All material shall meet the requirements of the National Electrical Code (N.E.C.), National Electrical Manufacturers Association (NEMA) specifications, and local codes and ordinances, and shall be Underwriter's Laboratories listed, where U.L. standards for such products exist.

All work shall be under the direct supervision of a master electrician.

SLC - 2 (2545) ELECTRICAL SYSTEM

The provisions of MN/DOT 2471, 2545, and 2565 shall apply in addition to the following:

SLC-2.1 Scope of Work

A. Description:

1. The work included in the project shall include the furnishing of all required labor and materials for a complete and operable electrical system as indicated on the accompanying Plans and as required by the project manual inclusive of all appurtenances not specifically shown or covered by the specifications but required for complete operation of the electrical system as

defined in the documents. The work shall also include the testing, adjustment, start-up and troubleshooting of the electrical equipment and the training of the City's operating personnel in its operation and maintenance.

2. It shall be the responsibility of the Contractor to furnish a complete and fully operating system. The Contractor shall be responsible for all details which may be necessary to properly install, adjust and place in operation the complete installation. The Contractor shall assume full responsibility for additional costs which may result from unauthorized deviations from the contract documents.

3. Light standards are to be furnished and installed as shown in the Plans and including but not limited to the following items:

   - poles, GFCI receptacles, luminaire arms and luminaires
   - rigid steel and PVC conduits
   - bushings
   - caps
   - in-the-line fuse holders and fuses
   - underground cable
   - pole wiring conductors
   - service cabinets with foundations
   - ground rods

4. The work included in the project shall include the furnishing of all required labor and materials for a complete and operable electrical system as indicated on the accompanying Plans and as required by the project manual inclusive of all appurtenances not specifically shown or covered by the specifications but required for complete operation of the electrical system as defined in the documents. The work shall also include the testing, adjustment, start-up and troubleshooting of the electrical equipment

B. Verification of Drawings:

1. The contract drawings indicate the required size of conduit and cable for wiring. The locations of equipment shall be verified in the field by the Contractor. In the event it should become necessary to change the location of any work due to interference with other work, consult with the Engineer before making any changes. The Contractor shall determine and be responsible for the proper location and character of all anchor bolts, inserts, hangers, sleeves, etc. for the electrical equipment, unless specifically detailed otherwise. Rough-in location

confirmation is required to be coordinated with equipment shop drawings prior to installation.

2. The drawings indicate the extent and general layout of the electrical systems. The drawings are drawn to the scale indicated, but the drawings shall not take precedence over field measurements. Make reasonable modifications to the layout to avoid conflict with other trades and underground utilities.

C. Quality:

1. All work shall be installed in a neat and workmanlike manner and shall be approved by the Engineer before final acceptance by the City.

2. If equipment is furnished having power and control requirements other than as specified, the Contractor shall make all necessary changes and furnish a complete set of drawings for installing the alternate equipment. The installation shall comply with the requirements of the 2011 edition of the National Electrical Code, local and state codes and ordinances. Where the contract documents call for workmanship or materials in excess of code requirements, the project manual shall take precedence. Electrical equipment and materials shall be Underwriter's Laboratory listed, where U.L. standards for such products exist.

3. All equipment to be installed on the project shall be new and unused except those items identified as relocated.

4. The Contractor shall keep the premises clean and orderly during installation of this work, remove rubbish periodically and as may be directed by the Engineer. Upon completion of this part of the project, remove all dirt, debris, tools, scaffolding, etc. used or resulting from this work.

D. Coordination:

1. Contractor shall coordinate his activities with the roadway contractor and all other parties occupying the site so as to not impede or delay construction progress. Contractor shall attend regularly scheduled construction progress meetings.

2. It shall be the sole responsibility of the Contractor to coordinate among suppliers and contractors providing equipment for the project. The coordination shall include, but not be limited to, operators, power requirements, etc.

3. Cooperate with other trades to avoid interferences in the installation of this work. Install all equipment and systems so as not to delay progress of construction, and correlate with other trades to avoid delay. Should differences of opinion develop; the Engineer's decision will be final.

4. Contract unit prices shall reflect all construction costs.

SLC-2.2 General

The distribution circuits of the new lighting system shall consist of conductors installed in PVC or HDPE conduit. Two of the conductors shall constitute one 240-volt lighting circuit and a third conductor shall be used as an equipment ground. Where specified on the Plan, three additional conductors shall constitute two 120-volt receptacle circuits.

Power supply to the new lighting system is 120/240-volt, single phase, alternating current. The system shall be metered.

SLC-2.3 Shop Drawings & Submittals

The Contractor shall submit to the City for approval, a complete list of major electrical system components. This list shall include the names of all suppliers and manufacturers and catalog numbers for the various components. This list must be approved by the City prior to the commencement of work on the Lighting System.

The Contractor shall furnish to the City five (5) complete sets of shop detail drawings, in accordance with the provisions of MN/DOT 2471.3B. The shop detail drawings shall be identified by "City of Burnsville" and the fabricator. The five sets of drawings shall be distributed, after approval to the following:

(1) Contractor
(2) Contractor's Fabricator
(3) Project Engineer (2 sets)
(4) City (3 sets)

Approval of shop drawings and submittals shall not relieve the Contractor from the responsibility for deviations from the drawings or specifications unless he has, in writing, called the City's attention to the deviations at the time of submission, and secured written approval, nor shall it relieve him from the responsibility for errors in shop drawings or submittals.

SLC-2.4 Materials

The City reserves the right to sample, test, inspect, and accept or reject any of the materials used for the Lighting Systems based on its own tests. However, the City may at their option, accept materials on the basis of listing by Underwriters Laboratories, Inc.

Fabrication and inspection of structural metals used for the Lighting Systems shall be in accordance with the applicable provisions of MN/DOT 2471.

A. Conduit:

The contractor shall furnish and install rigid steel conduit (RSC), non-metallic rigid conduit (NMC), or Continuous Length Conduit (HDPE) at the locations indicated in the Plans. Conduit shall be capable of being installed by plowing, trenching or directional boring methods. The size of the conduit shall be as indicated in the Plans. All conduit shall be in accordance with the following:

1. Metal Conduit: Metal conduit shall be galvanized Rigid Steel Conduit (RSC) and conduit fittings per MN/DOT 3801. Intermediate Metal Conduit (IMC) is not permitted.

2. Non-Metallic Conduit: Non-metallic conduit (NMC) and conduit fittings shall be Type II heavy-wall rigid PVC Schedule 40 plastic conduit and conduit fittings per MN/DOT 3803.

3. Continuous length HDPE conduit for lighting circuits shall be red in color. HDPE conduit for future communication fiber shall be orange in color. PVC conduit and fittings shall be installed within the concrete bases of service cabinets, and the base shafts of direct buried light poles. The Contractor shall use the appropriate conduit fittings when transitioning from HDPE to PVC or HDPE to HDPE. Glue or epoxy HDPE joints are not acceptable. Bell ends will be required at all conduit terminations in pull boxes, poles and service cabinets. No additional compensation will be made for installing conduit by directional boring or jacking methods.

4. Prior to the installation of cables and conductors, non-metallic conduit bell ends (appropriately sized for type of conduit used) shall be installed to prevent damage to cables and conductors.

5. All conduit shall have markings indicating the manufacturer's name, size, type, UL listing, and any other markings required by the NEC.

B. Anchor Rods:

1. Anchor rods, nuts, and washers shall be galvanized in accordance with the provisions of MN/DOT 3392, and the details shown in the lighting Plan.

2. Threaded portions of all anchor rods above the concrete foundations shall be coated with an approved rust inhibitor before installation of the service cabinet.

C. Electrical Cables and Conductors:

1. All electrical cables and conductors shall conform to the requirements of MN/DOT 2545.2D except as modified within these specifications.

D. Service Cabinet:

1. The service cabinet shall be as shown in the Plan details and shall be a "UL" approved NEMA-3R, pad mounted, and weatherproof. All door openings shall be sealed with neoprene gasketing and all hinges and hinge pins shall be of non-corroding construction. The cabinet shall be listed as "suitable for use as service equipment."

2. The wiring diagram for the service cabinet is shown in detail in the Plans.

3. The Contractor shall furnish and install photoelectric cell with contacts rated at 20 amperes.

4. The photo electric control shall be in accordance with Mn/DOT 3812 and have a minimum 30-second time delay capability.

5. The photo control shall be bracket mounted immediately behind LEXAN covered holes. The cabinet is a City standard and shall be manufactured by Povolny Specialties Inc.

6. Unless otherwise defined the main circuit breaker shall be rated at 200-amps and 240-volts with an interrupting rating of not less than 22,000 amps, r.m.s., sym. Circuit breakers shall indicate open, closed, or trip conditions by handle position. Circuit breakers shall be quick-make, quick-break with thermal-magnetic trips having long-time and instantaneous tripping characteristics.

7. The electric meter enclosure shall be installed on the cabinet as shown on the service cabinet detail drawing. The electric meter sockets shall be suitable for single phase, 3 wire; 120/240-volt service. Xcel Energy will provide the electric meter. Coordinate service connection with Xcel Energy representative Greg Wenzel, 952.829.4513.

E. Lighting Standard:

1. The Contractor shall furnish and install all lighting poles, luminaires, mounting arms and accessories, (lighting standards) as required by the contract documents and in accordance with the Equipment Schedule in the Plans. No substitutions allowed.

2. All metal components of the aluminum lighting standards shall have a factory powder-coat finish.

3. The fiberglass pole shaft shall have an integral factory finish.

4. All luminaires shall bear the U.L. label. The label shall be for the type of area the fixture is to be located in.

5. The luminaires shall have toolless access for all components.

6. Each roadway luminaire shall have an internal multi-volt LED driver, surge protector and LED arrays.

7. All fixtures shall be complete with guards, clips, retainers, etc. in accordance with the details, manufacturer's specifications governing the installation of the fixtures.

8. The Contractor shall follow manufacturer's instructions regarding luminaire installation.

9. The Contractor shall coat all threaded hardware with an approved zinc-based anti-seize compound prior to assembly.

10. The lighting unit shall be installed in a workable first class condition, and shall include all miscellaneous hardware required for a complete lighting unit installation.

F. Single Conductor Wires:

The single conductor feeder wires, distribution wires, pole wires, and control wires shall have Class B stranded annealed un-coated copper conductors and be listed by UL as Type XHHW-2. Service conductors shall bear UL label for Type USE-2. The insulation on

each lighting distribution conductor shall be colored red, black, white or green. Single conductor pole wires connecting the luminaires to the distribution circuits shall be 1/c #12 stranded wire with XHHW-2 rated insulation.

G. Fuses:

1. Each luminaire in the 240-volt system shall be fused with two 6-amp fuses.

2. All receptacles in the 120-volt receptacle circuits shall be fused with one 10-amp fuse. Fuse holders shall be installed in the phase wires of their respective circuits at the access handhole of the light standards.

3. The fuses shall be mounted in inline molded fuse connector/holders with the casing located at the level of the handhole. The two-pole fuse holders for the 240-volt luminaires shall be a Bussman (Catalog. No. HEX-AW-DRLC-A) or approved equal. The single-pole fuse holders for the 120-volt GFCI receptacles shall be a Bussman (Catalog. No. HEB-AW-RLC-A), or approved equal. Fuse holders shall be of the breakaway type. The Contractor shall provide sufficient excess conductor length to allow withdrawal of the connected fuse holder. The grounding wires shall not be fused. Fuses and fuse holders shall be "UL" listed and shall be installed in such a manner that the fuse stays with the load side when holder is separated. In addition, the Contractor shall form loops in the leads on each side of the fuse holders and so position the fuse holders so that they may be easily removed or inserted through the access hole. The grounding conductor shall not be fused.

H. Grounding:

1. The equipment grounding conductor shall be bonded to the foundation ground rod where shown on the Plans, and to the metal frame of the luminaires at every decorative light standard. An insulated (green) copper-conductor shall be used. The size of the ground conductor shall be as required by the National Electrical Code or No. 6 AWG, whichever is larger.

2. Ground rods shall be copper plated steel.

I. Lighting Handholes:

1. Designed to carry light vehicular traffic.

2. Covers:

    a. Bolt down type with stainless steel bolts.
    b. Mold the word “Street Lighting” into cover.

3. Materials:

    a. Polymer Concrete
    b. Conform to ASTM D-635.
    c. Self-extinguishing material.
    d. Test to 50 degrees F.
    e. No change in physical properties due to weather exposure.
    f. Color: Gray.
    g. Top dimensions shall not exceed bottom dimensions by more than 1 inch.
    h. Extensions shall be of same material.
    i. Quazite #PC1324BA12, or approved equal.

J. Fiber Optic Handholes:

1. Underground enclosures (handholes) shall be constructed of a fiberglass-reinforced polymer material.

2. Handholes shall be sized as noted in the Plans for each specific location. Handholes shall be rated for use at sidewalk, driveway, and parking lot areas.

3. Handholes shall be as follows:

    a. Flush mounted to the existing grade and constructed with a load rating to carry light vehicle traffic.
    b. Equipped with a locking keyed mechanism.
    c. Equipped with cable racks, conduit entrances, and strut inserts.
    d. Designed for a long life over a wide range of temperature extremes.
    e. Feature interlock for concrete sidewalk retention.
    f. Not be equipped with a solid bottom.
    g. Placed on a 24-inch deep aggregate base bottom contained by wire mesh that allows drainage from the handhole and secures the aggregate base in place to solidify the base of the handhole.
    h. Contain a ground rod.
    i. Shall be Newbasis Part No. PCA3048, or Engineer approved equal.

4. A permanent identification label ("City Fiber", or approved equal) shall be applied to the cover of each handhole.

5. All conduits entering or exiting these handholes shall be sealed to prevent entrance of moisture.

K. Switch Labels:

1. All switches, other than lighting switches, shall have an engraved label identifying the function of the switch and switch positions. Labels shall be stainless steel, brass or engraved laminated plastic, attached with screws.

L. Wiring Devices - Specification Grade:

1. Wiring devices shall be AC quiet, NEMA specification grade, heavy duty unless otherwise specified. All devices shall meet Federal and NEMA standards, and shall bear the U.L. label. The voltage rating shall be as required for the application. The devices shall have an ampacity of not less than 20 amps.

2. Where applicable, devices located in hazardous areas or areas where adverse conditions exist, shall meet NEMA and National Electrical Code requirements for those areas.

M. Bell Ends:

1. Plastic bell ends shall be used when conductors enter or leave a conduit system.

SLC-2.5 Construction Requirements

A. Installation:

1. The Contractor shall furnish, install, wire and start up equipment as required by the contract documents. The manufacturer's installation recommendations shall be observed, and the completed assembly shall meet applicable code requirements.

B. Conduit Placement:

1. Conduit size shall be as specified in the Plans.

2. Contractor shall visit the site and make his own determination of the linear footage of conduit requiring boring in determining his bid on the project.

3. Conduits shall be installed underground in a direct line between light standards (unless trees or other obstructions require an alternate location) within the roadway right-of-way to a depth of 24 inches, as shown in the Plans or as directed by the Engineer or City. All conduits installed across surfaced streets shall be installed with a minimum cover of 24 inches. Cover material shall not contain rock or other debris that could damage the conduit. The cover material shall be firmly tamped into place to minimize uneven settlement above or below the conduit.

4. All conduits that are to be placed under driveways, streets, medians and sidewalks that are not scheduled for removal shall be pneuma-gophered, directional bored, or another method approved by Engineer or City, which will not damage or disturb the integrity of the driveway, street, or sidewalk.

5. Permanent surfaces such as sidewalks, medians, driveways and streets generally shall not be removed to install underground conduit. Contractor can remove these surfaces where it is necessary for boring on permission of the City. The Contractor is responsible to replace and compact the subgrade material and replace the permanent surface material in kind (exactly as the existing).

6. In general, all conduit runs shall be straight and true, and all offset and bends shall be uniform and symmetrical. Field bends of conduit shall only be accomplished through the use of approved conduit fittings. The Contractor shall adjust the elevations of the conduit assembly for its full length to approximately the same gradient as the finished roadway, and shall furnish and install in the trench, such suitable spacers and framing as may be necessary to maintain the correct grade and alignment.

7. Contractor shall avoid disturbing tree roots when installing conduit for the underground electric distribution conductors. Where underground conductors must cross tree roots Contractor shall follow the procedure listed below.

8. Trees less than 12 inches in diameter bore at a minimum of 24 inches below grade. For trees over 12 inches in diameter bore at a minimum of 36 inches below grade.

9. Trenching for boring shall stay out of drip line of trees. The following distances from the tree shall be considered a minimum.

Tree Diameter	Distance
6 to 9 inches	5 feet
10 to 14 inches	10 feet
15 to 19 inches	12 feet
Over 19 inches	15 feet

10. Contractor boring tunnel shall be 1 to 2 feet either side of tree center to avoid damage to tap root.

B. Conductor Installation:

1. No splices shall be made in underground distribution wiring except in pole bases. Conductors shall be continuous from pole to pole. Wiring shall be terminated as required in the contract documents.

2. All wire and cable shall be tested for grounds and continuity before the circuit is energized. The Contractor shall assume full responsibility for damage done to the equipment due to circuit grounds or open circuits.

C. Restoration:

1. Trenches shall be restored to grade as directed by the Engineer or City.

2. All sections of sidewalk damaged or removed by the Contractor shall be replaced in full panel increments. Where sections of sidewalk intersections are removed, the Contractor shall remove and replace the entire sidewalk intersection to a point where it connects to the curb radius.

3. The Contractor shall restore any damages resulting from construction activities to acceptable condition as directed by the Engineer or City. This includes but is not limited to restoration of sod, settling/heaving/cracking of pavement due to construction activities and any other damage associated with the installation of the electrical lighting system.

4. Where sidewalks, pavement, or streets are opened, the opening shall be restored to the original thickness using a material type equal to that removed.
5. Where areas of turf or planting beds are disturbed by construction, they shall be restored to the original condition using a material type equal to that removed.

D. Distribution Circuits:

1. The complete underground distribution circuits shall extend from the service cabinets in conduit to the lighting units and pass through the base of each lighting unit.

E. Splices:

1. Splices shall be made only in the service panel and light standard bases. Splices in light bases and service cabinets shall only be made using Burndy Uni-tap BIB splicing hardware. Wire nuts are not allowed.

F. Handholes:

1. The Contractor shall furnish and install new handholes at locations shown in the Plan or as directed by the Engineer. Excavate minimum 24 inches below base depth and refill with pea gravel. Handholes shall be installed flush with finished grade. Install stainless steel bolts to hold cover in place.

G. Foundations:

1. The Contractor shall furnish and install a light base foundation, Light Base Design E Modified for lighting units Type Special 3 at the locations indicated in the Plan, as per MN/DOT Standard Plate No. 8127 except that it shall be modified to fit the bolt circle specific to the light pole manufacturer as detailed in the shop drawings.

2. Maintain 2 inches of clearance from finished boulevard or sidewalk grade to top of concrete anchor bases. The Contractor shall coordinate foundation installation with the Engineer, City and General Contractor to ensure proper foundation elevations are maintained.

3. All light foundations shall be located in the field following the Plan. The Contractor is responsible for obtaining location of existing utilities and identifying any possible conflicts. Any

such conflicts shall be reported immediately to the Engineer and City.

4. The Contractor shall furnish and install a Service Cabinet Foundation in accordance with the details in the Plan. Anchor rods, nuts and washers in the lighting service cabinet concrete foundation shall be installed as per the requirements of the lighting service cabinet shown on the Plans. Anchor Rods in accordance with MN/DOT 3385 shall be galvanized full length in accordance with MN/DOT 3392 and shall be four (4) in quantity for each cabinet. Each anchor rod shall be threaded a minimum of 4 inches and be provided with two (2) hex-head galvanized nuts and one galvanized washer.

5. Maintain 4 inches of clearance from finished boulevard or sidewalk grade to top of foundation. The Contractor shall coordinate foundation installation with the Engineer, City and General Contractor to ensure proper foundation elevation is maintained.

6. Rust Inhibitor: Threaded portions of all anchor rods above the concrete foundations shall be coated with an approved rust inhibitor before installation of the light standards.

7. The concrete for all foundations shall be mix number 3Y43 free of chloride additives conforming to MN/DOT Specification 2461. Concrete shall be placed and consolidated using vibratory equipment and be finished smooth, flat and level in accordance with MN/DOT 2565.F. Concrete shall be allowed to cure for a minimum of seven (7) days before being placed into use unless otherwise permitted by the Engineer.

8. An approved form shall be provided and placed for the foundation to insure a good symmetrical top. Excavations for the concrete foundations shall be made to the exact dimensions of the foundation so that no backfilling will be required. If the soil conditions are such that the above provisions cannot be met, the Engineer shall be contacted.

9. Where concrete for sidewalks is to be placed adjacent to new foundation, the foundation shall be wrapped with tar felt to prevent bonding of the sidewalk to the new foundation.

10. Factory bent PVC conduit shall be required to bring the wireways in the foundation down to the depth as shown in the details in the Plan. Conduits shall extend a minimum of 2

inches above the foundation. Care shall be taken to insure that all extended conduits will fit into the opening in the base of the service cabinet.

11. Appropriate couplings shall be used to connect HDPE conduit to PVC conduit at the light bases and underground runs. PVC cement or epoxy shall not be used to bond HDPE conduit to PVC conduit.

H. Installation of Lighting Units:

1. Lighting standards shall be installed plumb and level. Soil around direct embed fiberglass poles shall be compacted in accordance with MnDOT specified requirements and manufacturer's requirements.

I. Wiring of Luminaires and Receptacles:

1. All conductors of the lighting and receptacle distribution circuits shall pass through the base of each light standard. The conductors shall be fused as previously noted. All splices must take place in the base of the light standard. All splices shall be weather tight and use Burndy Uni-Tap BIB connectors.

2. The conductors to the luminaires and receptacles shall be stranded, No. 12 AWG Type XHHW-2 and be connected to the load and ground conductors of the distribution circuit.

J. Wiring of Service Cabinets:

1. Lighting surge arrestors shall be installed in the cabinets on the supply side of the service equipment.

2. At the pad mounted service cabinets, Contractor shall establish a 25-ohm ground by the use of copper clad ground rods.

3. A No. 6 AWG bare copper wire shall be extended from the ground rods and be bonded to the pad-mounted service cabinet. The ground rods shall be cast into the service cabinet foundation and be under the service cabinet frame.

4. From the pad mounted service cabinet, two No. 3/0 AWG (Type USE-2) conductors and one No. 3/0 AWG (Type USE-2) neutral conductor shall extend underground in a 2-inch rigid non-metallic conduit to the utility transformer or to a pole riser and overhead transformer or secondary conductors. Equipment

such as the pole riser conduit and weather head is incidental to the service cabinet.

5. The grounding conductor shall be terminated in and be bonded to the pad mounted service cabinet. The neutral conductor shall be bonded to the grounding conductor in the pad-mounted service cabinet.

6. The utility supply will be furnished from ground mounted or overhead transformer or conductors by Xcel Energy. The Utility will make the final service connections after a Certificate/Affidavit of Inspection has been filed by the Contractor with the Utility.

K. Service equipment:

1. The Contractor shall furnish, install, and making operational service equipment as specified herein at the location indicated in the Plans. Verify exact location for service equipment with the Utility.

2. Service equipment includes the following:

   a. Meter socket and mounting brackets.
   b. All conduit and power conductors to pad mounted transformer.
   c. Wiring connections.
   d. Ground rod electrode.
   e. Bonding and grounding materials and connections.
   f. Other items incidental to a complete meter socket and service installation.

L. Painting:

1. Contractor shall touch-up all lighting equipment damaged during transportation and installation with a color-matched finish.

M. Rust Inhibitor:

1. A thorough application of an approved rust inhibitor shall be used to grease or otherwise protect the threads of the anchor rod, prior to pouring the concrete foundation to ensure that the concrete does not mold to the threaded portion of the rod.

2. All threaded stainless steel hardware and dissimilar metal, threaded hardware shall be coated with an approved zinc-based anti-seize compound by the Contractor.

SLC - 3 WARRANTY

The Contractor shall guarantee the operation of the installation and that the materials and workmanship of the equipment be free from defects for a period of one (1) year from the date of acceptance, providing the equipment has been operated and maintained in accordance with the manufacturer's recommendations. If a dispute exists regarding whether the equipment has been maintained according to the manufacturer's recommendations, the Engineer's decision will be final. The guarantee shall include all parts and labor necessary to return the system to normal operation. The guarantee on all equipment shall start after formal acceptance of equipment as defined by the General Conditions and after successful completion of start-up procedures.

SLC - 4 ASBUILT DRAWINGS AND O & M MANUAL

Contractor shall supply accurate asbuilt drawings of the project to the City. Drawings shall indicate location and setback of conduit, service cabinet and Utility service point, and pole locations along the roadway measured from a reliable location.

The Contractor shall collect, gather and assemble into one book the installation details, instructions, schematics of actual equipment and operations directions supplied by the manufacturer with all equipment. Final acceptance of the work will be withheld until such data has been presented complete to the City. The manual shall be available for instruction of operations and maintenance of equipment and systems.

SLC - 5 SYSTEM TESTING

The Contractor shall test the equipment installed under these specifications and shall demonstrate its proper operation to City staff.

No equipment shall be tested, or operated for any purpose until it has been fully prepared, connected and made ready for normal operation. Any damage to equipment occasioned by improper or ill-timed operation or testing shall be made good, at the Contractor’s own expense, before final inspection and acceptance.

END OF SPECIAL PROVISIONS

EXHIBIT 1

INSURANCE TERMS

Contractor agrees to provide and maintain at all times during the term of this Contract such insurance coverages as are indicated herein and to otherwise comply with the provisions that follow. Such policy(ies) of insurance shall apply to the extent of, but not as a limitation upon or in satisfaction of, the Contract indemnity provisions. The provisions of this section shall also apply to all Subcontractors, Sub-subcontractors, and Independent Contractors engaged by Contractor with respect to this Contract, and Contractor shall be entirely responsible for securing the compliance of all such persons or parties with these provisions.

APPLICABLE SECTIONS ARE CHECKED

☒ 1. Workers Compensation. Workers' Compensation insurance in compliance with all applicable statutes including an All States or Universal Endorsement where applicable. Such policy shall include Employer's Liability coverage in an amount no less than $500,000. If Contractor is not required by Statute to carry Workers' Compensation Insurance, Contractor agrees: (1) to provide County with evidence documenting the specific provision under Minn. Stat. § 176.041 which excludes Contractor from the requirement of obtaining Workers' Compensation Insurance; (2) to provide prior notice to County of any change in Contractor's exemption status under Minn. Stat. § 176.041; and (3) to hold harmless and indemnify County from and against any and all claims and losses brought by Contractor or any subcontractor or other person claiming through Contractor for Workers' Compensation or Employers' Liability benefits for damages arising out of any injury or illness resulting from performance of work under this Contract. If any such change requires Contractor to obtain Workers' Compensation Insurance, Contractor agrees to promptly provide County with evidence of such insurance coverage.

☒ 2. General Liability.

"Commercial General Liability Insurance" coverage (Insurance Services Office form title), providing coverage on an "occurrence" rather than on a "claims made" basis, which policy shall include, but not be limited to, coverage for Bodily Injury, Property Damage, Personal Injury, Contractual Liability (applying to this Contract), Independent Contractors, "XC&U" and Products-Completed Operations liability (if applicable). Such coverage may be provided under an equivalent policy form (or forms), so long as such equivalent form (or forms) affords coverage which is at least as broad. An Insurance Services Office "Comprehensive General Liability" policy which includes a Broad Form Endorsement GL 0404 (Insurance Services Office designation) shall be considered to be an acceptable equivalent policy form.

Contractor agrees to maintain at all times during the period of this Contract a total combined general liability policy limit of at least $1,500,000 per occurrence and aggregate, applying to liability for Bodily Injury, Personal Injury, and Property Damage, which total limit may be satisfied by the limit afforded under its Commercial General Liability policy, or equivalent policy, or by such policy in combination with the limits afforded by an Umbrella or Excess Liability policy (or policies); provided, that the coverage afforded under any such Umbrella or Excess Liability policy is at least as broad as that afforded by the underlying Commercial General Liability policy (or equivalent underlying policy).

Such Commercial General Liability policy and Umbrella or Excess Liability policy (or policies) may provide aggregate limits for some or all of the coverages afforded thereunder, so long as such aggregate limits have not, as of the beginning of the term or at any time during the term, been reduced to less than the total required limits stated above, and further, that the Umbrella or Excess Liability policy provides coverage from the point that such aggregate limits in the underlying Commercial General Liability policy become reduced or exhausted. An Umbrella or Excess Liability policy which "drops down" to respond immediately over reduced underlying limits, or in place of exhausted underlying limits, but subject to a deductible or "retention" amount, shall be acceptable in this regard so long as such deductible or retention for each occurrence does not exceed the amount shown in the provision below.

Contractor's liability insurance coverage may be subject to a deductible, "retention" or "participation" (or other similar provision) requiring the Contractor to remain responsible for a stated amount or percentage of each covered loss; provided, that such deductible, retention or participation amount shall not exceed $25,000 each occurrence.

☒ Such policy(ies) shall name Dakota County, its officers, employees and agents as Additional Insureds thereunder.

☒| 3. Professional Liability. Professional Liability (errors and omissions) insurance with respect to its professional activities to be performed under this Contract. This amount of insurance shall be at least $1,500,000 per occurrence and aggregate (if applicable). Coverage under such policy may be subject to a deductible, not to exceed $25,000 per occurrence. Contractor agrees to maintain such insurance for at least one (1) year from Contract termination.

It is understood that such Professional Liability insurance may be provided on a claims-made basis, and, in such case, that changes in insurers or insurance policy forms could result in the impairment of the liability insurance protection intended for Dakota County hereunder. Contractor therefore agrees that it will not seek or voluntarily accept any such change in its Professional Liability insurance coverage if such impairment of Dakota County's protection could result; and further, that it will exercise its rights under any "Extended Reporting Period" ("tail coverage") or similar policy option if necessary or appropriate to avoid impairment of Dakota County's protection. Contractor further agrees that it will, throughout the one (1) year period of required coverage, immediately: (a) advise Dakota County of any intended or pending change of any Professional Liability insurers or policy forms, and provide Dakota County with all pertinent information that Dakota County may reasonably request to determine compliance with this section; and (b) immediately advise Dakota County of any claims or threats of claims that might reasonably be expected to reduce the amount of such insurance remaining available for the protection of Dakota County.

☒ 4. Automobile Liability. Business Automobile Liability insurance covering liability for Bodily Injury and Property Damage arising out of the ownership, use, maintenance, or operation of all owned, non-owned and hired automobiles and other motor vehicles utilized by Contractor in connection with its performance under this Contract. Such policy shall provide total liability limits for combined Bodily Injury and/or Property Damage in the amount of at least $1,500,000 per accident, which total limits may be satisfied by the limits afforded under such policy, or by such policy in combination with the limits afforded by an Umbrella or Excess Liability policy(ies); provided, that the coverage afforded under any such Umbrella or Excess Liability policy(ies) shall be at least as broad with respect to such Business Automobile Liability insurance as that afforded by the underlying policy. **Unless included within the scope of Contractor's Commercial General Liability policy, such Business Automobile Liability policy shall also include coverage for motor vehicle liability assumed under this contract.**

☐ Such policy, and, if applicable, such Umbrella or Excess Liability policy(ies), shall include Dakota County, its officers, employees and agents as Additional Insureds thereunder.

☒ 5. Additional Insurance. Dakota County shall, at any time during the period of the Contract, have the right to require that Contractor secure any additional insurance, or additional feature to existing insurance, as Dakota County may reasonably require for the protection of their interests or those of the public. In such event Contractor shall proceed with due diligence to make every good faith effort to promptly comply with such additional requirement(s).

☒ 6. Evidence of Insurance. Contractor shall promptly provide Dakota County with evidence that the insurance coverage required hereunder is in full force and effect prior to commencement of any work. At least 10 days prior to termination of any such coverage, Contractor shall provide Dakota County with evidence that such coverage will be renewed or replaced upon termination with insurance that complies with these provisions. Such evidence of insurance shall be in the form of the Dakota County Certificate of Insurance, or in such other form as Dakota County may reasonably request, and shall contain sufficient information to allow Dakota County to determine whether there is compliance with these provisions. At the request of Dakota County, Contractor shall, in addition to providing such evidence of insurance, promptly furnish Contract Manager with a complete (and if so required, insurer-certified) copy of each insurance policy intended to provide coverage required hereunder. All such policies shall be endorsed to require that the insurer provide at least 30 days' notice to Dakota County prior to the effective date of policy cancellation, nonrenewal, or material adverse change in coverage terms. On the Certificate of Insurance, Contractor's insurance agency shall certify that he/she has Error and Omissions coverage.

☒ 7. Insurer: Policies. All policies of insurance required under this paragraph shall be issued by financially responsible insurers licensed to do business in the State of Minnesota, and all such insurers must be acceptable to Dakota County. Such acceptance by Dakota County shall not be unreasonably withheld or delayed. An insurer with a current A.M. Best Company rating of at least A:VII shall be conclusively deemed to be acceptable. In all other instances, Dakota County shall have 15 business days from the date of receipt of Contractor's evidence of insurance to advise Contractor in writing of any insurer that is not acceptable to Dakota County. If Dakota County does not respond in writing within such 15 day period, Contractor's insurer(s) shall be deemed to be acceptable to Dakota County.

☒ 8. Noncompliance. In the event of the failure of Contractor to maintain such insurance and/or to furnish satisfactory evidence thereof as required herein, Dakota County shall have the right to purchase such insurance on behalf of Contractor, which agrees to provide all necessary and appropriate information therefor and to pay the cost thereof to Dakota County immediately upon presentation of invoice.

☒ 9. Loss Information. At the request of Dakota County, Contractor shall promptly furnish loss information concerning all liability claims brought against Contractor (or any other insured under Contractor's required policies), that may affect the amount of liability insurance available for the benefit and protection of Dakota County under this section. Such loss information shall include such specifics and be in such form as Dakota County may reasonably require.

☒ 10. Release and Waiver. Contractor agrees to rely entirely upon its own property insurance for recovery with respect to any damage, loss or injury to the property interests of Contractor. Contractor hereby releases Dakota County, its officers, employees, agents, and others acting on their behalf, from all claims, and all liability or responsibility to Contractor, and to anyone claiming through or under Contractor, by way of subrogation or otherwise, for any loss of or damage to Contractor's business or property caused by fire or other peril or event, even if such fire or other peril or event was caused in whole or in part by the negligence or other act or omission of Dakota County or other party who is to be released by the terms hereof, or by anyone for whom such party may be responsible.

Contractor agrees to effect such revision of any property insurance policy as may be necessary in order to permit the release and waiver of subrogation agreed to herein. Contractor shall, upon the request of Dakota County, promptly provide a Certificate of Insurance, or other form of evidence as may be reasonably requested by Dakota County, evidencing that the full waiver of subrogation privilege contemplated by this provision is present; and/or, if so requested by Dakota County, Contractor shall provide a full and complete copy of the pertinent property insurance policy(ies).

STIPULATION FOR FOREIGN IRON OR STEEL MATERIALS

The attached form is for use when the Contractor plans on using and/or supplying ANY foreign iron or steel materials on a Federal Aid Project. The Contractor is directed to the Proposal to determine if this Stipulation is required for a specific project.

S.P. _____

STIPULATION FOR FOREIGN IRON OR STEEL MATERIALS

In accordance with 1601 of these Special Provisions, the Contractor must submit a bid based on supplying material(s) that have been melted and manufactured in the United States, except where the cost of the iron and steel products incorporated in the work does not exceed one tenth of one percent of the total project cost, or $2,500.00, whichever is greater. The Contractor **must** submit a stipulation for supplying **ANY** foreign iron or steel materials in accordance with the U.S. Code of Regulations 23CFR635.410 and the requirements of 1601.

The line entry must show the pay item number, a description of the foreign steel product, the estimated quantity, and the estimated invoice price.

PAY ITEM NO.	DESCRIPTION OF FOREIGN STEEL OR IRON PRODUCT OR COMPONENT	ESTIMATED QUANTITIES	ESTIMATED INVOICE PRICE

Total Estimated Invoice Price = _____

Percent of Total Bid Price = _____

Contractor Name:_____
Vendor Number: _____

If Applicable: This form must be submitted to the Department by the Contractor before the bid opening, as indicated in the Special Provisions.

(1910) FUEL ESCALATION CLAUSE

The provisions set forth in Mn/DOT 1910 are hereby deleted, and the following is substituted therefore:

These provisions provide for compensation adjustments in the cost of motor fuels (diesel and gasoline) consumed in prosecuting the Contract work. The Engineer will calculate the Fuel Cost Adjustments. Payments or credits will be applied to partial and final payments for work items set forth herein.

For this purpose, the Department will establish a Base Fuel Index (BFI) for fuel to be used on the Project. The Base Fuel Index will be the average of the high and low rack prices shown for No. 2 ultra low sulfur fuel oil in the "OPIS Energy Group" tabulation titled "RackFax, Minneapolis, MN, OPIS Direct Gross No. 2 Distillate Fuels" ***for the day of the Contract letting***.

A Current Fuel Index (CFI) in cents per gallon will be established for each month. The CFI will be the average of the high and low rack prices shown for No. 2 ultra low sulfur fuel oil in the "OPIS Energy Group" tabulation titled "RackFax, Minneapolis, MN, OPIS Direct Gross No. 2 Distillate Fuels" averaged for the beginning and ending dates of the monthly period being adjusted.

The Engineer will compute the ratio of the Current Fuel Index to the Base Fuel Index (CFI/BFI) each month. If that ratio falls between 0.85 and 1.15, no fuel adjustment will be made that month. If the ratio is less than 0.85, a credit to the Department will be computed. If the ratio is greater than 1.15, additional payment to the Contractor will be computed.

Credit or additional payment will be computed as follows:

(1) The Engineer will estimate the quantity of work done in that month under each of the Contract items listed below.

(2) The Engineer will compute the gallons of fuel used in that month for each of the Contract items listed below by applying the unit fuel usage factors shown.

(3) The Engineer will summarize the total gallons (Q) of fuel used in that month for the applicable items.

(4) The Engineer will determine the Fuel Cost Adjustment (FCA) from the following formulas:

If the Current Fuel Index (CFI) is greater than the Base Fuel Index (BFI), the following formula shall be used to determine the amount of Fuel Cost Adjustment to be paid to the Contractor.

$$FCA = [(CFI/BFI) - 1.15] \times Q \times BFI$$

If the Current Fuel Index (CFI) is less than the Base Fuel Index (BFI), the following formula shall be used to determine the amount of Fuel Cost Adjustment to be credited to the Department.

$$FCA = [(CFI/BFI) - 0.85] \times Q \times BFI$$

Where FCA = Fuel Cost Adjustment (cents)
CFI = Current Fuel Index (cents per gallon)
BFI = Base Fuel Index (cents per gallon)
Q = Monthly total gallons of fuel

Basis of Payment

A Fuel Cost Adjustment payment to the Contractor will be made as a lump sum each payment period based on the last published CFI. A Fuel Cost Adjustment credit to the Department will be deducted as a lump sum each payment period from any monies due the Contractor. Upon completion of the work under the Contract, any difference between the estimated quantities previously paid and the final quantities will be determined. The CFI in effect on the day of completion of the Contract will be applied to the quantity differences in accordance with the procedures set forth above.

Schedule of Work Items
(Only items shown will be considered for compensation adjustments.)

	Item	Unit	Gallons of Fuel per Unit	Unit	Gallons of Fuel per Unit
(1) Earthwork:					
2105.501	Common Excavation	Cu. Yd	0.17	m^3	0.22
2105.503	Rock Excavation	Cu. Yd	0.27	m^3	0.35
2105.505	Muck Excavation	Cu. Yd	0.17	m^3	0.22
2105.507	Subgrade Excavation	Cu. Yd	0.17	m^3	0.22
2105.515	Unclassified Excavation	Cu. Yd	0.23	m^3	0.30
2105.521	Granular Borrow (EV)	Cu. Yd	0.17	m^3	0.22
	Granular Borrow (CV)	Cu. Yd	0.19	m^3	0.25
	Granular Borrow (LV)	Cu. Yd	0.14	m^3	0.18
2105.522	Select Granular Borrow (EV)	Cu. Yd	0.17	m^3	0.22
	Select Granular Borrow (CV)	Cu. Yd	0.19	m^3	0.25
	Select Granular Borrow (LV)	Cu. Yd	0.14	m^3	0.18
2105.523	Common Borrow (EV)	Cu. Yd	0.17	m^3	0.22
	Common Borrow (CV)	Cu. Yd	0.19	m^3	0.25
	Common Borrow (LV)	Cu. Yd	0.14	m^3	0.18
2105.535	Topsoil Borrow (EV)	Cu. Yd	0.17	m^3	0.22
	Topsoil Borrow (CV)	Cu. Yd	0.19	m^3	0.25
	Topsoil Borrow (LV)	Cu. Yd	0.14	m^3	0.18
2106.607	Common Embankment (CV)	Cu. Yd	0.19	m^3	0.25
2106.607	Granular Embankment (CV)	Cu. Yd	0.19	m^3	0.25
2106.607	Select Granular Embankment(CV)	Cu. Yd	0.19	m^3	0.25
2106.607	Select Granular Embankment Modified (__ %) (CV)	Cu. Yd	0.19	m^3	0.25
2106.607	Excavation – Rock	Cu. Yd	0.27	m^3	0.35
2106.607	Excavation – Muck	Cu. Yd	0.17	m^3	0.22

	Item	Unit	Gallons of Fuel per Unit	Unit	Gallons of Fuel per Unit
(2) Aggregate Base:					
2211.501	Aggregate Base	Ton	0.55	t	0.61
2211.502	Aggregate Base (LV)	Cu. Yd	0.77	m^3	1.01
2211.503	Aggregate Base (CV)	Cu. Yd	0.99	m^3	1.29
2211.607	Open Graded Aggregate Base (CV)	Cu. Yd	0.99	m^3	1.29
(3) Aggregate Shouldering:					
2221.501	Aggregate Shouldering	Ton	0.55	t	0.61
2221.502	Aggregate Shouldering (LV)	Cu. Yd	0.77	m^3	1.01
2221.503	Aggregate Shouldering (CV)	Cu. Yd	0.99	m^3	1.29
(4) Concrete Pavements:					
2301.511	Structural Concrete	Cu. Yd	0.98	m^3	1.28
2301.513	Structural Concrete HE	Cu. Yd	0.98	m^3	1.28
2301.604	Structural Concrete	Sq. Yd.	0.027*t	m^2	0.00128*t
(5) Bituminous Pavements:					
2350.501	Type ( ) Wearing Course Mixture ( )	Ton	0.90	t	0.99
2350.502	Type ( ) Non-Wearing Course Mixture ( )	Ton	0.90	t	0.99
2350.503	Type ( ) ( ) Course ( ), (***t***)" Thick	Sq. Yd	0.051*t		
2350.503	Type ( ) ( ) Course (,), (***t***) mm Thick			m^2	0.0024*t
2360.501	Type SP ( ) Wearing Course Mixture ( )	Ton	0.90	t	0.99
2360.502	Type SP ( ) Non-Wearing Course Mixture (,)	Ton	0.90	t	0.99
2360.503	Type SP ( ) ( ) Course (,), (***t***)" thick	Sq. Yd	0.051*t		
2360.503	Type SP ( ) ( ) Course (,), (***t***) mm thick			m^2	0.0024*t
(6) Pipe: ***					
2501.511	__ ____ Pipe Culvert ___	Lin. Ft.	0.70	m	2.30
2501.521	__ ____ Pipe Arch Culvert ___	Lin. Ft.	0.70	m	2.30
2501.561	__ ____ Pipe Culvert Des 3006 ___	Lin. Ft.	0.70	m	2.30
2501.603	__ Pipe Culvert	Lin. Ft.	0.70	m	2.30
2503.511	__ ____ Pipe Sewer ___	Lin. Ft.	0.70	m	2.30
2503.521	__ ____ Pipe Arch Sewer ___	Lin. Ft.	0.70	m	2.30
2503.541	__ ____ Pipe Sewer Des 3006 ___	Lin. Ft.	0.70	m	2.30
2503.603	__ ____ Pipe Sewer	Lin. Ft.	0.70	m	2.30

t = thickness (in inches or mm)

NOTE: No price adjustments will be made on fuel used for drying and heating aggregates.
*** No price adjustment will be made for pipes less than 12" in diameter or jacked pipes.

DISADVANTAGED BUSINESS ENTERPRISE (DBE) SPECIAL PROVISIONS

PURPOSE

These provisions (1) provide an explanation of the federal law and information regarding compliance with the DBE requirements applicable to this contract, (2) explain the process Mn/DOT will follow to evaluate bidders' efforts to obtain DBE participation, (3) provide the standards Mn/DOT will use to measure compliance with these requirements, and (4) identifies sanctions.

POLICY STATEMENT

It is the policy of the Minnesota Department of Transportation (Mn/DOT) that DBEs, as defined in 49 C.F.R. § 26, shall have the maximum feasible opportunity to participate in contracts financed in whole or in part with public funds provided by the U.S. Department of Transportation (DOT). Consistent with this policy, Mn/DOT will not allow any person or business to be excluded from participation in, denied the benefits of, or to otherwise be discriminated against in connection with the award and performance of any DOT-assisted contract because of sex, color, race, or national origin. Mn/DOT has established a Disadvantaged Business Enterprise Program in accordance with regulations of the DOT, 49 C.F.R. § 26.

Mn/DOT has received federal financial assistance from DOT for this contract, therefore the DBE requirements of 49 C.F.R. § 26 apply to this contract. As a condition of receiving this assistance, Mn/DOT has provided assurance it will comply with the 49 C.F.R. § 26. This regulation requires that contractors take necessary and reasonable steps to ensure that DBEs have the maximum opportunity to compete for and perform this contract. These special provisions provide detailed information about these requirements, and identify the responsibility the contractor has to demonstrate compliance with the requirements.

CONTRACT ASSURANCE

The contractor, and its subcontractor(s), shall not discriminate on the basis of sex, color, race or national origin in the performance of this contract. The contractor agrees to act in accordance with applicable requirements of 49 C.F.R. § 26 in the execution and award of this contract. Failure by the contractor to comply with these requirements is a material breach of this contract, which may result in the termination of this contract or other such remedy as Mn/DOT deems appropriate.

CONTENTS

Purpose.....1
Policy Statement 1
Contract Assurance 1
Basic Requirement.....3
DBE Goal of this Contract.....3
Methods to Attain the Goal.....3
Soliciting DBEs 3
ALB Submittal of Documentation.....4
Failure to Submit Documentation.....5
GFE Analysis - Goal not Met 5
Evaluation of GFE 6
Administrative Reconsideration.....8
Counting DBE Participation &
Commercially Useful Function……9
Failure to Fulfill DBE Commitment……12
DBE Replacement.....12
Prompt Payment.....13
DBE Description of Work and
Field Monitoring Report (Exhibit A).....14
Certificate of Good Faith Efforts
Consolidated Form (GFE Form).....16
Contractor Payment Form……..…….....24
DBE Total Payment Affidavit……26

BASIC REQUIREMENT

In order to be awarded this contract, the Apparent Low Bidder (ALB) must establish either (1) that it has met the DBE participation goal of the contract; or (2) that it has made adequate good faith efforts (GFE) to meet the DBE goal. This requirement is in addition to all other pre-award requirements.

DBE GOAL OF THIS CONTRACT

The DBE goal on this contract is _**9.4%**_ percent.

METHODS TO ATTAIN THE GOAL

The goal may be attained by:

1. Subcontracting with a DBE certified by the Minnesota Unified Certification Program (Mn/UCP). To prove the existence of such a subcontract, the Apparent Low Bidder (ALB) shall submit a signed agreement or a signed affidavit committing it to enter into such a subcontract;

2. Leasing equipment from a Mn/UCP-certified DBE;

3. Entering into a joint venture with a Mn/UCP-certified DBE. This joint venture must be approved in writing by the Mn/DOT Office of Civil Rights prior to bid opening;

4. Purchasing materials and supplies from a Mn/UCP-certified DBE. Generally, sixty percent (60%) of the supplier's contracted amount will be credited toward the DBE goal; however 100% of the amount will be credited towards the DBE goal if the supplies or materials are obtained from a Mn/UCP -certified DBE manufacturer; or

5. Using other services as approved in writing by the Mn/DOT Office of Civil Rights prior to bid opening.

SOLICITING DBEs

All bidders should make every reasonable effort to subcontract work to DBEs through good faith negotiations and solicitations in advance of the dates specified for submitting and opening of bids.

In order to fulfill a DBE goal, the firms utilized as DBE subcontractors or suppliers must be certified as DBEs by the Mn/UCP **prior to the date of the bid opening**. The Mn/UCP DBE directory, which is found on Mn/DOT's Office of Civil Rights website, includes the names and addresses of all certified DBE firms. To be listed in the DBE directory, a DBE needs only to be

certified as a DBE by the Mn/UCP. Neither Mn/DOT nor the Mn/UCP makes any representation as to any DBE's technical or financial ability to perform the work. Prime contractors are solely responsible for performing due diligence in hiring DBE subcontractors. A DBE subcontractor's failure to perform the work will not be considered justification for a compensation increase.

APPARENT LOW BIDDER (ALB) SUBMITTAL OF INFORMATION

The ALB must identify the efforts it made to meet the DBE goal. The ALB must submit the information described in this section to the Mn/DOT Office of Civil Rights. All bidders are required to thoroughly document these solicitation efforts. The ALB shall justify any bids, quotes, or proposals it rejects from properly certified, qualified DBE firms.

THE FOLLOWING INFORMATION MUST BE SUBMITTED ON THE SUBMISSION DUE DATE. The Submission Due Date is the fifth business day after the bid letting date, unless the Mn/DOT Director of the Office of Civil Rights grants a written extension for good cause shown. The five day period starts the business day following the bid letting date. Information sent by fax or personal delivery must be received by the Mn/DOT Office of Civil Rights no later than 4:30PM central time on the Submission Due Date. Information sent by U.S. mail must be postmarked no later than the Submission Due Date. FAILURE TO SUBMIT ALL REQUIRED INFORMATION WITHIN THE ALLOWED FIVE BUSINESS DAY PERIOD WILL RESULT IN REJECTION OF YOUR BID ON THE BASIS THAT YOU ARE NOT A RESPONSIBLE BIDDER. PARTIAL SUBMISSIONS WILL NOT BE CONSIDERED.

The ALB must either (1) identify DBE participation sufficient to meet the DBE goal; or (2) demonstrate that the ALB made adequate good faith efforts to meet the DBE goal. The ALB must submit the following documents to the Mn/DOT Office of Civil Rights:

1. Certificate of Good Faith Efforts Consolidated Form (GFE Consolidated Form)
2. DBE Description of Work and Field Monitoring Report (Exhibit A)
3. Supporting Documentation to Verify Good Faith Efforts

The ALB must complete and submit the attached **Certificate of Good Faith Efforts Consolidated Form** as stated in the form instructions.

Part A - The ALB must provide contact information.

Part B - The ALB must provide project information including the DBE goal and the amount of DBE commitment the ALB obtained.

Part C - The ALB must provide information stating the amount of self-performance and DBE and non-DBE subcontractors' participation in this contract.

Part D - The ALB must list each subcontractor it **solicited.** The information must include all DBE and non-DBE firms (including all subcontractors, service providers and suppliers) from whom the ALB solicited quotes to provide work and supplies for this contract. Part D must be completed only if the ALB did not obtain sufficient DBE participation to meet the DBE goal.

Part E - The ALB must list the DBE firms that it intends to use on this contract and

provide an Exhibit A form and quote.

Part F - The ALB must list all non-DBE firms that provided a quote and indicate whether the non-DBE quote was accepted.

Part G - The ALB must list DBE firms that provided a quote but were not selected. Part G must be completed only if the ALB did not obtain sufficient DBE participation to meet the DBE goal.

Part H - The ALB must complete this **Good Faith Efforts Affidavit** regardless of whether the ALB's list of proposed subcontractors, service providers, and suppliers shows sufficient DBE participation to meet the DBE goal set for this contract.

The ALB must submit **DBE Description of Work and Field Monitoring Report** (**Exhibit A)**. A separate form must be submitted for each DBE firm the ALB proposes to utilize on the project. This must *be accompanied by proof of commitment to use the DBE firms*, such as copies of signed agreements, affidavits, or letters of intent. These commitments will be used to determine the "commitment rate" (the percentage of DBE participation). The ALB must commit to using the proposed DBE firms for not less than the percentage of the DBE participation shown on the DBE Description of Work and Field Monitoring Report (Exhibit A). An ALB will be deemed a non-responsible bidder if it fails to include in its submission a completed DBE Description of Work and Field Monitoring Report (Exhibit A) for each DBE along with the required signed agreements or affidavits.

The ALB must submit information that demonstrates its adequate good faith efforts to achieve the DBE goal. This information can include, but is not limited to, copies of solicitation letters, faxes, and emails to DBE firms. The ALB must identify the actions it took to achieve the DBE goal, including those actions listed in 49 C.F.R. § 26 Appendix A.

FAILURE TO SUBMIT INFORMATION

If the ALB fails to submit the information required by the previous section the ALB is a non-responsible bidder and Mn/DOT will reject the ALB's bid. **All required information must be submitted by the Submission Due Date.** The information submitted shall state the ALB's commitment to use DBEs for not less than the commitment rate.

IF THE DBE GOAL IS NOT MET, A GOOD FAITH EFFORTS REVIEW WILL BE CONDUCTED

An ALB that does not commit to meeting the DBE goal is thereby not disqualified if the ALB demonstrates that it made adequate good faith efforts (GFE) to meet the DBE goal. An ALB that does not commit to meet the DBE goal and fails to show adequate GFE were made is a non-responsible bidder and Mn/DOT will reject its bid. See 49 C.F.R. § 26.53(a)(2).

A DBE firm that bids as a prime contractor will be deemed to have met the DBE goal if the value of the work performed by its own forces, combined with any work that it has committed to be performed by DBE subcontractors and DBE suppliers, meets or exceeds the DBE goal. See 49 C.F.R. § 26.53(g).

In addition to the GFE activities listed in the following section, Mn/DOT may, as permitted by the Federal regulations, take into account the performance of other bidders in meeting the DBE contract goal. See 49 C.F.R. § 26 Appendix A(V).

EVALUATION OF GOOD FAITH EFFORTS

If an ALB has a DBE commitment rate that is below the DBE goal, then the ALB must demonstrate that it made adequate good faith efforts in attempting to meet the DBE goal. Mn/DOT's Office of Civil Rights (OCR) staff will review the GFE documents submitted by the ALB and the DBE commitment submitted by each bidder to evaluate the ALB's commitment rate.

The ALB must show that it took all necessary and reasonable steps to achieve the DBE goal which, by their scope, intensity, and appropriateness to the objective, could reasonably be expected to obtain sufficient DBE participation, even if they were not fully successful. In evaluating the ALB's adequate good faith efforts, Mn/DOT will consider the following list of actions. This is not a mandatory checklist, nor is it intended to be exclusive or exhaustive. Other factors or types of efforts may be relevant in appropriate cases. Compliance with the adequate good faith efforts requirement will be determined on a case-by-case basis.

A. Soliciting through all reasonable and available means (e.g. attendance at pre-bid meetings, advertising and /or written notices) the interest of all certified DBEs who have the capability to perform the work of the contract. The ALB must solicit this interest within sufficient time to allow the DBEs to respond to the solicitation. The bidder must determine with certainty if the DBEs are interested by taking appropriate steps to follow up initial solicitations.

B. Selecting portions of the work to be performed by DBEs in order to increase the likelihood that the DBE goals will be achieved. This includes, where appropriate, breaking out contract work items into economically feasible units to facilitate DBE participation, even when the prime contractor might otherwise prefer to perform these work items with its own forces.

C. Providing interested DBEs with adequate information about the plans, specifications, and requirements of the contract in a timely manner to assist them in responding to a solicitation.

D(1) Negotiating in good faith with interested DBEs. It is the ALB's responsibility to make a portion of the work available to DBE subcontractors and suppliers and to select those portions of the work or material needs consistent with the available DBE subcontractors and suppliers, so as to facilitate DBE participation. Evidence of such negotiation includes the names, addresses and telephone numbers of DBEs that were considered; a description of the information provided regarding the plans and specifications for the work selected for subcontracting; and evidence as to why

additional agreements could not be reached for DBEs to perform the work.

D(2) An ALB using good business judgment would consider a number of factors in negotiating with subcontractors, including DBE subcontractors, and would take a firm's price and capabilities as well as contract goals into consideration. However, the fact that there may be some additional costs involved in finding and using DBEs is not in itself sufficient reason for a bidder's failure to meet the contract DBE goal, as long as such costs are reasonable. Also, the ability or desire of a prime contractor to perform the work of a contract with its own organization does not relieve the ALB of the responsibility to make the good faith efforts. Prime contractors are not, however, required to accept higher quotes from DBEs if the price difference is excessive or unreasonable.

E. Not rejecting DBEs as being unqualified without sound reasons based on a thorough investigation of their capabilities. The contractor's standing within its industry, membership in specific groups, organizations, or associations and political or social affiliations (for example union vs. non-union employee status) are not legitimate causes for the rejection or non-solicitation of bids in the contractor’s efforts to meet the project goal.

F. Making efforts to assist interested DBEs in obtaining bonding , lines of credit, or insurance as required by the recipient or contractor.

G. Making efforts to assist interested DBEs in obtaining necessary equipment, supplies, materials, or related assistance or services.

H. Effectively using the services of available minority/women community organizations; minority/women contractors' groups; local, state, and Federal minority/women business assistance offices; and other organizations as allowed on a case-by-case basis to provide assistance in the recruitment and placement of DBEs.

Following this review, the OCR staff will make a recommendation to the Director of OCR, or designee, (Director) as to whether the ALB has met the DBE goal or made adequate good faith efforts. The Director of OCR will determine whether the ALB has met the DBE goal or made adequate good faith efforts to meet the goal for this contract in accordance with 49 C.F.R. § 26.53 and 49 C.F.R.§ 26 Appendix A. The Director’s written determination will be mailed to the ALB informing it of this decision approximately 10-12 business days after the Submission Due Date. If the Director determines that the ALB failed to meet the DBE goal or that it failed to make adequate good faith efforts to do so, the determination notice will be sent by certified U.S. mail.

An ALB that fails to meet the DBE goal or fails to make adequate good faith efforts to meet the goal is a non-responsible bidder and shall not be awarded the contract.

ADMINISTRATIVE RECONSIDERATION

If the Director determines that the ALB failed to make adequate good faith efforts, the ALB may request administrative reconsideration. (49 C.F.R. § 26.53(d)). If the ALB does not make a timely written request for administrative reconsideration as described herein, the ALB will be deemed to have waived its right to request administrative reconsideration.

The ALB's request for administrative reconsideration must be made in writing. Requests sent by fax or personal delivery must be received by the Mn/DOT Office of Civil Rights no later than 4:30 PM on the fifth business day after the ALB receives written notice of the determination. Administrative reconsideration requests sent by U.S. mail must be postmarked no later than the fifth business day after the ALB receives notice of the determination. The ALB is deemed to have notice as of the date indicated on the certified mail receipt signed by the ALB, or its representative, at the time of delivery. The ALB must submit the written request for reconsideration to the attention of **Mn/DOT Deputy Commissioner at MnDOT, 395 John Ireland Blvd. St. Paul, Minnesota 55155; or by fax 651-366-4795. A copy of the request must be sent to the Director of the Office of Civil Rights at the same address or fax 651-366-3129.**

The Mn/DOT Deputy Commissioner, or a designated official, will serve as the Reconsideration Official. The Reconsideration Official shall not have any role in the original determination that the ALB failed to meet the DBE goal or failed to make adequate good faith efforts to do so.

In the reconsideration process, the ALB will have the opportunity to:

- Provide written documentation or argument concerning the issue of whether the ALB met the goal or made adequate good faith efforts to do so. (49 C.F.R. § 26.53(d)(1).

- Meet in person with the Reconsideration Official to discuss the issue of whether the ALB met the goal or made adequate good faith efforts to do so. (49 C.F.R. § 26.53(d)(3).

The Reconsideration Official will reconsider the record documenting the good faith efforts of the ALB. The reconsideration process will include the documents and arguments that the ALB is permitted to submit. The reconsideration process is a review of only the good faith efforts made by the ALB as of the Submission Due Date. Good faith efforts made subsequent to that date will not be considered.

Mn/DOT will provide the ALB with a written decision on reconsideration, explaining the basis for the determination **within 5 business days following the date scheduled for the ALB to meet with the Reconsideration Official to discuss the issue.** In accordance with 49 C.F.R. § 26.53(d)(5), the result of Mn/DOT's reconsideration process is not subject to administrative appeal to the U.S. Department of Transportation.

COUNTING DBE PARTICIPATION & COMMERCIALLY USEFUL FUNCTION

In accordance with 49 C.F.R. § 26.55, Mn/DOT will determine the percentage of DBE participation that will be counted toward the overall DBE goal as follows:

(a) When a DBE participates in a contract, Mn/DOT will only count the value of the work actually performed by the DBE toward DBE goals.

1. The entire amount of the portion of a construction contract (or other contract not covered by paragraph 49 C.F.R. § 26.55(a)(2)) that is performed by the DBE's own forces. Include the cost of supplies and materials obtained by the DBE for the work of the contract, including supplies purchased or equipment leased by the DBE (except supplies, and equipment the DBE subcontractor purchases or leases from the prime contractor or its affiliate).

2. The entire amount of fees or commissions charged by a DBE firm for providing a bona fide service, such as professional, technical, consultant, or managerial services, or for providing bonds or insurance specifically required for the performance of a DOT-assisted contract, counts toward DBE goals, provided that Mn/DOT determines the fee to be reasonable and not excessive as compared with fees customarily allowed for similar services.

3. When a DBE subcontracts part of the work of its contract to another firm, the value of the subcontract work may be counted toward DBE goals only if the DBE's subcontractor is itself a DBE. Work that a DBE subcontracts to a non-DBE firm will not count toward DBE goals.

(b) When a DBE performs as a participant in a joint venture, Mn/DOT will count a portion of the total dollar value of the contract equal to the distinct, clearly defined portion of the work of the contract that the DBE performs with its own forces toward DBE goals.

(c) Mn/DOT will count expenditures of a DBE contractor toward DBE goals only if the DBE is performing a commercially useful function on that contract.

1. A DBE performs a commercially useful function when it is responsible for execution of the work of the contract and is carrying out its responsibilities by actually performing, managing, and supervising the work involved. To perform a commercially useful function, the DBE must also be responsible, with respect to materials and supplies used on the Contract, for negotiating price, determining quality and quantity, ordering the materials, and installing (where applicable) and paying for the material itself. To determine whether a DBE is performing a commercially useful function, Mn/DOT will evaluate the amount of work subcontracted, industry practices, whether the amount the firm is to be paid under the Contract is commensurate with the work it is actually performing and DBE credit claimed for its performance of the work, and other relevant factors.

2. A DBE does not perform a commercially useful function if its role is limited to that of an extra participant in a transaction, contract, or project through which the funds are passed in order to obtain the appearance of DBE participation. In determining whether a DBE is such an extra participant, MnDOT must examine similar transactions, particularly those in which DBEs do not participate.

3. If a DBE does not perform or exercise responsibility for at least 30 percent of the total cost of its contract with its own work force, or the DBE subcontracts a greater portion of the work of a contract than would be expected on the basis of normal industry practice for the type of work involved, Mn/DOT must presume that it is not performing a commercially useful function.

4. When a DBE is presumed not to be performing a commercially useful function as provided in the preceding paragraph, the DBE may present evidence to rebut this presumption. Mn/DOT may determine that the firm is performing a commercially useful function given the type of work involved and normal industry practices.

5. Mn/DOT decisions on commercially useful function matters are subject to review by the concerned operating administration, but are not administratively appealable to U.S. DOT.

(d) Mn/DOT will use the following factors in determining whether a DBE trucking company is performing a commercially useful function:

1. The DBE must be responsible for the management and supervision of the entire trucking operation for which it is responsible on a particular contract, and there can not be a contrived arrangement for the purpose of the meeting DBE goals.

2. The DBE must itself own and operate at least one fully licensed, insured, and operational truck used on the contract.

3. The DBE receives credit for the total value of the transportation services it provides on the contract using trucks it owns, insures and operates using drivers it employs.

4. The DBE may lease trucks from another DBE firm, including an owner-operator who is certified as a DBE. The DBE who leases trucks from another DBE receives credit for the total value of the transportation services the lessee DBE provides on the contract.

5. The DBE may also lease trucks from a non-DBE firm, including an owner-operator. The DBE who leases trucks from a non-DBE is entitled to credit for the total value of transportation services provided by non-DBE lessees not to exceed the value of transportation services provided by DBE-owned trucks on the contract. Additional participation by non-DBE lessees receives credit only for the fee or commission it receives as a result of the lease arrangement. If a recipient chooses this approach, it must obtain written consent from the Director of the Office of Civil Rights.

6. For purposes of this section, a lease must indicate that the DBE has exclusive use of and control over the truck. This does not preclude the leased truck from working for others during the term of the lease with the consent of the DBE, so long as the lease gives the DBE absolute priority for the use of the leased truck. Leased trucks must display the name and identification number of the DBE.

(e) Mn/DOT will count expenditures with DBEs for materials or supplies toward DBE goals as provided in the following:

1. Mn/DOT will count 100% of the cost of the materials or supplies toward DBE goals if the materials or supplies are obtained from a DBE manufacturer.

2. For purposes of this section (e), a manufacturer is a firm that operates or maintains a factory or establishment that produces, on the premises, the materials, supplies, articles, or equipment required under the contract and of the general character described in the specifications.

3. If the materials or supplies are purchased from a DBE regular dealer, Mn/DOT will count 60% of the cost of the materials or supplies toward DBE goals.

4. For purposes of this section (e), a regular dealer is a firm that owns, operates, or maintains a store, warehouse, or other establishment in which the materials, supplies, articles or equipment of the general character described by the specifications and required under the contract are bought, kept in stock, and regularly sold to or leased to the public in the usual course of business.

A. To be a regular dealer, the firm must be an established, regular business that engages, as its principal business and under its own name, in the purchase and sale or lease of the products in question.

B. A person may be a regular dealer in such bulk items as petroleum products, steel, cement, gravel, stone or asphalt without owning, operating, or maintaining a place of business as provided in 49 C.F.R. §26.55(e)(2)(ii) if the person both owns and operates distribution equipment for the products. Any supplementing of regular dealers' own distribution equipment shall be by a long -term lease agreement and not on an ad hoc or contract-by-contract basis.

C. Packagers, brokers, manufacturers' representatives, or other persons who arrange or expedite transactions are not regular dealers within the meaning of this section (e).

5. With respect to materials or supplies purchased from a DBE which is neither a manufacturer nor a regular dealer, Mn/DOT will count the entire amount of fees or commissions charged for assistance in the procurement of the materials and supplies, or fees or transportation charges for the delivery of materials or supplies required on a

job site, toward DBE goals, provided Mn/DOT determines the fees to be reasonable and not excessive as compared with fees customarily allowed for similar services. Mn/DOT, however, will not count any portion of the cost of the materials or supplies themselves toward DBE goals.

(f) If a firm is not currently certified as a DBE in accordance with the standards of 49 C.F.R. § 26 Subpart D at the time of execution of the contract, Mn/DOT will not count the firm's participation toward any DBE goals.

(g) The dollar value of the work performed under a contract with a firm after it has ceased to be certified will not be counted toward the overall goal.

(h) Mn/DOT will not count the participation of a DBE subcontractor toward the contractor's final compliance with its DBE obligations on a contract until the amount being counted has been actually paid to the DBE.

FAILURE TO FULFILL DBE COMMITMENT

Mn/DOT will invoke appropriate administrative sanctions for non-compliance when a contract has been awarded and performance has begun, but the contractor fails to meet the DBE goal or make an adequate good faith effort to do so. Sanctions for noncompliance may include, but are not limited to, Mn/DOT withholding progress payments and taking a monetary deduction from the contract proceeds. If the contractor fails to complete its work on the contracts executed with DBE firms, as required by this contract, and the failure is through no fault of the DBE firms, MnDOT may deduct a sum equal to the portion of the DBE commitment not fulfilled. This provision will not apply if Mn/DOT reduces the quantity of work subcontracted to the DBE.

Mn/DOT may allow an adjustment of the commitment if the DBE participant that was part of the original commitment fails to perform and cannot be replaced with another DBE subcontractor despite the contractor's adequate good faith efforts to find another DBE to perform the same amount of work.

DBE REPLACEMENT

The contractor must make good faith efforts to replace a DBE subcontractor who is unable to perform successfully with another DBE to perform the same amount of work. The contractor shall not terminate for its convenience a DBE subcontract and then perform the work of the terminated subcontract with its own forces.

Once a contractor submits an affidavit, subcontract or other signed agreement, and the DBE Description of Work and Field Monitoring Report (Exhibit A), the DBE firm cannot be replaced by another DBE or a non-DBE firm for any reason until the following occurs:

1. Mn/DOT's Office of Civil Rights receives a written request for approval of the

substitution, including the reasons for the substitution; and,

2. Mn/DOT's Office of Civil Rights grants the contractor a written approval of the substitution.

Mn/DOT staff may assist the Contractor, when requested, in replacing DBEs. This assistance may include but is not limited to:

1. Providing the contractor with information regarding the availability of other DBEs.

2. Providing the contractor with assistance in locating available DBEs

PROMPT PAYMENT

Minnesota Statutes §16A.1245 requires that the prime contractor agrees to pay each subcontractor within ten (10) days of the prime contractor's receipt of payment from the state for undisputed services provided by the subcontractor. The prime contractor is subject to pay interest charges of 1-1/2 percent per month, or any part of a month, to the subcontractor on any undisputed amount not paid to the subcontractor within the ten (10) day period. This provision applies to DBE and non-DBE subcontractors.

Prime contractors are required to make prompt and full payment of any retainage kept by the prime contractor to the subcontractor within 10 days after the subcontractor's work is satisfactorily completed. Satisfactorily completed means when all the tasks called for in the subcontract have been accomplished and documented as required by Mn/DOT. When Mn/DOT has made incremental acceptances of a portion of a prime contract, the work of a subcontractor covered by that acceptance is deemed to be satisfactorily completed. See 49 C.F.R. § 26.29(b) and (c).

Failure to comply with these payment provisions may result in penalties including the withholding of progress payments to prime contractors. Appropriate penalties will be determined by Mn/DOT. The Contractor Payment Form must be completed for payments to subcontractors regardless of their DBE status.

Prime Contractor _____ State Project # _____

DBE Description of Work
And Field Monitoring Report (Exhibit A)

A contract will not be awarded to the Prime Contractor unless this form is submitted with a signed subcontract, purchase order or affidavit for each DBE participating in the contract. This form is complete when the DBE subcontractor has filled in **all of the applicable information in sections A and B and signs in section C.**
PLEASE PRINT CLEARLY OR TYPE.

Section (A): (All DBE Subcontractors, including Trucking firms must complete this Section.)

MUST BE COMPLETED BY THE DBE PRINCIPAL

Letting Date: _____ State Project Number: _____

Prime Contractor: _____ Phone #: _____

DBE Subcontractor: _____ Phone #: _____

DBE Principal Name: _____ Total Subcontract $: _____

DBE Participation Claimed: Percent _____% Amount $ _____

1. Did you bid and sign a subcontract agreement with the above-named prime contractor? _____
2. Are the items, quantities, and prices listed on the subcontract agreement or affidavit correct? _____
3. List the line items to be performed: _____

_____

4. Are there any other agreements not addressed in the subcontract? If yes, please explain: _____

_____

5. If equipment to be used is other than what is listed in your DBE certification file please answer the following:

   a. Will the renting or leasing include any of the following: (Attach a copy of the lease or rental agreement(s).
   Equipment _____ Insurance _____ Operator _____ or Maintenance _____

   b. Lessor's name: _____
   Amount to be paid: _____ Number of days to be used: _____

6. Will there be any other firm(s) providing work listed in your (DBE) subcontract?

   If yes, answer the following: Firm's Name: _____ $ amount of the work: _____

2. What is the name of the person supervising your work on this project? _____
   Is this your employee? _____
8. How many people will you be employing on this project? _____ Minorities: _____ Females: _____
9. Total dollar amount of materials to be supplied? _____
10. Who are you purchasing the materials from? _____

1. Please submit Purchase Agreement and/or Purchase Order from manufacturer(s) or primary material supplier(s).
   NOTE: This Exhibit 'A' will not be approved without the Purchase Agreement/Purchase Order.
2. Please list all subcontracts that your firm will be performing during the current construction season including non-DBE work:
   (**Attach additional sheet if necessary**.)

	Project Number	Prime Contractor	Project Location	# of Working Days
1.				
2.				
3.				

Mn/DOT OCR 8/2010

Prime Contractor _____ State Project # _____

Section (B):

TO BE COMPLETED ONLY BY THE DBE TRUCKER

1. The number of hours contracted or quantities to be hauled on this project? _____
2. How many fully operational units will be used on this Project? _____ (Tractor/trailers: _____ Dump trucks: _____
3. How many fully operational units will be yours? _____ (Dump trucks: _____ Tractors/trailers: _____)
4. How many other units will be yours? _____ (Tractors: _____ Trailers: _____)
5. If ITO's or trucking companies are to be used on this project answer the following:

	Name of ITO/Company	**Dollar Amount of Contract/Agreement**	**Number of Dump Trucks, Tractors/Trailers** (specify)
1.			
2.			
3.			
4.			

Section (C): (**<u>All</u>** DBE Subcontractors, including Trucking firms, must complete Section C.)

I hereby certify that the information presented above is correct. I agree to inform the Office of Civil Rights in writing of any changes within 10 days of the change(s).

DBE Company: _____

DBE Principal: _____ _____ _____

Signature Title Date

Section (D): **TO BE COMPLETED BY Mn/DOT OFFICE OF CIVIL RIGHTS STAFF PERSON**

Project Number: _____ District # _____

Mn/DOT OCR Staff Person: _____ Phone No. _____

Project Engineer: _____ On-site Phone #: _____

Office Phone #: _____

Section (E): **TO BE COMPLETED BY PROJECT ENGINEER WHEN THE DBE'S PORTION OF WORK IS $^1/_3$ TO ½ COMPLETED**

1. Does it appear that the DBE firm is performing the work specified in (Exhibit "A") description of work?
   Yes _____ No _____
2. Does it appear that the DBE contractor is managing their portion of the project and using their own company employees?
   Yes _____ No _____
3. Does it appear that the DBE contractor is providing the equipment for their items of work or other work specified?
   Yes _____ No _____
4. Does it appear that the quality of the DBE contractor's performance, scheduling and project management are meeting industry standards?
   Yes _____ No _____
5. Comments: _____

NOTE: If you, as the Project Engineer, have checked "NO" to any of the above questions or have any other comments, it is important that you contact the Mn/DOT Office of Civil Rights Staff Person assigned to this project.

Project Engineer: _____ Date: _____

Prime Contractor _____ State Project # _____

Certificate of Good Faith Efforts Consolidated Form (GFE Form) Instructions

This form consolidates the Certificate of Good Faith Efforts, the Good Faith Efforts Affidavit, and the Bidders List in the DBE Special Provisions and is referred to as the GFE Consolidated form. All parts of this form must be completed unless otherwise stated in the section's heading. The Apparent Low Bidder (ALB) must complete this form and submit it with the Good Faith Efforts Information by the Submission Due Date as defined in the DBE Special Provisions. Prime contractors may also use this form to demonstrate good faith efforts when a DBE is replaced after the contract is awarded.

The ALB should include in its Good Faith Efforts Information a cover letter addressed to the Mn/DOT Office of Civil Rights. The cover letter should identify in detail the efforts the ALB made to meet the DBE goal. The ALB is required to thoroughly document its solicitation efforts and justify any bids, quotes or proposals it rejects from properly certified DBE firms. **THE COVER LETTER SHOULD INCLUDE EACH OF THE FACTORS IDENTIFIED IN 49 C.F.R. Part 26, App. A, SUMMARIZED AS FOLLOWS:**

1. This GFE Consolidated Form must be completed. Please note that **"Part D - SOLICITATION OF SUBCONTRACTORS, SUPPLIERS, AND SERVICE PROVIDERS" on pg. 4, and "Part G – DBES QUOTED BUT NOT SELECTED" on pg. 7 are to be completed ONLY IF the DBE goal is NOT met.**
2. A statement of the ALB's overall plan for obtaining DBE participation noting barriers or challenges the ALB encountered in obtaining DBE participation. Specifically, detailing how all necessary and reasonable steps to achieve the DBE goal or other requirements which, by their scope, intensity, and appropriateness to the objective of achieving the DBE goal, could reasonably be expected to obtain sufficient DBE participation - even if the ALB was not successful.
3. **The solicitation requirement is two-fold and includes the *initial solicitation* and appropriate *follow up* with interested DBEs.** Evidence of solicitation efforts of DBEs such as copies of requests for bids sent to DBE firms with identification of the firms clearly stated; fax confirmation sheets displaying the date, fax number, name of DBE firm, and status; list of all DBE firms called, date, contact name and response; or email distribution lists with date and time clearly indicated. The solicitations to DBEs should provide sufficient information about the type of work available on the project.
4. Identify the efforts made to select portions of work to be performed by DBEs in order to increase the likelihood that the DBE goal will be achieved. This includes, where appropriate, breaking out contract work items into economically feasible units to facilitate DBE participation.
5. A detailed explanation of the reason for not accepting DBE quotes. Each non-accepted quote should be addressed individually. Provide an explanation of the efforts the ALB made to negotiate in good faith with interested DBEs. Provide information about any cost comparisons that were considered in the decision to not accept DBE quotes. **The fact that there may be some additional costs involved in finding and using DBEs is not in itself sufficient reason for an ALB's failure to meet the contract DBE goal, as long a such costs are reasonable.** The ALB is not required to accept higher quotes from DBEs if the price difference is excessive or unreasonable. If the ALB makes such a determination it should provide a written explanation for this conclusion.
6. A detailed explanation of the ALBs efforts to assist interested DBEs in obtaining bonding, lines of credit, or insurance.
7. A detailed explanation of the ALBs efforts to assist interested DBEs in obtaining necessary equipment, supplies, materials or related assistance or services.
8. A detailed explanation of the effective use by the ALB of the services of available minority/women community organizations; minority/women contractor's groups; local, state, and Federal minority/women business assistance offices; and other organizations as allowed on a case-by-case basis to provide assistance in the recruitment and placement of DBEs.
9. Provide copies of any advertisements placed on hardcopy or websites. Advertisements should include information about the project(s), type(s) of work for which quotes are being solicited, and specific contact information for the ALB.

Contact the Mn/DOT Office of Civil Rights if you have any questions; main line 651-366-3073

Prime Contractor _____ State Project # _____

Guidelines for Certificate of Good Faith Efforts (GFE) Consolidated Form

The Apparent Low Bidder (ALB) must show that it took all necessary and reasonable steps to achieve the DBE goal which by their scope, intensity and appropriateness to the objective, could reasonably be expected to obtain sufficient DBE participation, even if not fully successful. The criteria for evaluating good faith efforts is described in 49 CFR, Part 26, Appendix A which can be found at http://www.osdbu.dot.gov/DBEProgram/. ALBs submitting good faith efforts information should address the following factors in its Good Faith Efforts Information submission. The information below is not a mandatory list, nor is it exclusive or exhaustive.

Criteria 1: "Solicitation Efforts"

1. Did the ALB use the current DBE Directory to identify DBEs?
2. Did the ALB perform sufficient solicitations given the amount of work to meet the DBE goal?
3. Did the ALB break out and solicit for work in economically feasible units?
4. Did the ALB solicit for work that it otherwise would self-perform?
5. Were DBEs with business operations in close geographic proximity to the project solicited?

Criteria 2: "Timely Notice"

1. Did the ALB send timely written (e-mail/fax) solicitation notices to certified DBE firms?
2. Did the solicitation notice include the following:
   a. Name and location of project
   b. Bid date
   c. Scope of work requested
   d. Location where DBE's can review plans and specifications
   e. Date and time to submit quote
   f. Contact name for technical assistance
   g. Any special requirements

Criteria 3: "Finance and Bonding Outreach"

1. Did the ALB offer assistance by providing contacts for possible bonding, insurance, and lines of credit?
2. Did the ALB offer assistance by providing technical assistance in these areas?

Criteria 4: "ALB follow-Up"

1. Did the contractor maintain a "follow-up log" from the initial solicitation? The log must show:
   a. Type of contact (fax, telephone, e-mail)
   b. Name of contact person
   c. Name of DBE firm
   d. Date and time of DBE contacted
   e. Response received
   f. Reason for DBE not bidding project (if applicable)

Criteria 5: "ALB DBE Program Outreach and Support"

1. Did the ALB host DBE informational workshops, attend Minnesota Department of Transportation (Mn/DOT) sponsored DBE events; such as networking sessions, DBE conferences, DBE/ALB meetings, etc.?
2. Did the ALB contact minority business organizations about DBE opportunities?

Note: The Submission Due Date is **the fifth business day after the bid letting date** in accordance with the Mn/DOT DBE Special Provisions. Contact the Mn/DOT Office of Civil Rights if you have any questions; main line 651-366-3073

Prime Contractor _____ State Project # _____

MINNESOTA DEPARTMENT OF TRANSPORTATION
OFFICE OF CIVIL RIGHTS
CERTIFICATE OF GOOD FAITH EFFORTS CONSOLIDATED FORM

This Certificate of Good Faith Efforts Consolidated form (GFE Consolidated form) is required to demonstrate that the Apparent Low Bidder (ALB) either met the DBE goal, or made adequate good faith efforts to meet the DBE goal pursuant to 49 C.F.R. Part 26, Appendix A. Please refer to the instruction sheet prior to completing the form. This form and all supporting Good Faith Efforts documentation must be provided to the Mn/DOT Office of Civil Rights prior to the Submission Due Date as defined within the DBE Special Provisions.

PART A – PRIME CONTRACTOR'S INFORMATION (All Primes complete this section.)				
COMPANY NAME				
ADDRESS	STREET	CITY	STATE	ZIP CODE
PHONE #	FAX #		EMAIL ADDRESS	
CONTACT PERSON		TITLE		

PART B - PROJECT DESCRIPTION (All Primes complete this section.)			
STATE PROJECT #	CONTRACT # (If Applicable)		☐Attach copy of Mn/DOT Advertisement
ANTICIPATED START DATE (Based on progress schedule)		EXPECTED COMPLETION DATE (Based on progress schedule)	
DBE GOAL %	**VS**	DBE COMMITMENT %	(Type of GFE Information – Check one only) ☐ Pre-award ☐ Post-award/Execution
TOTAL DBE PARTICIPATION DOLLARS BASED ON ADVERTISED DBE GOAL (Total prime bid $ * DBE % Goal)			

PART C – PROJECT SUMMARY AMOUNTS (All Primes complete this section.)	
TOTAL PRIME BID	$
TOTAL DOLLARS COMMITTED TO NON-DBE'S (Not including suppliers)	$
TOTAL DOLLARS COMMITTED TO DBE'S (Not including suppliers)	$
TOTAL DOLLARS COMMITTED TO DBE SUPPLIERS (Total paid to DBE suppliers 60%)	$
WORKED PERFORMED BY PRIME	$
PERCENT OF WORK PERFORMED BY PRIME	%
TOTAL DBE PARTICIPATION REMAINING (Difference between DBE goal $ and DBE commitment $)	$

Prime Contractor _____ State Project # _____

PART D – SOLICITATION OF SUBCONTRACTORS, SUPPLIERS, AND SERVICE PROVIDERS (Complete this part only if DBE goal is not met.)

List all subcontractors solicited, both DBE and non-DBE contractors, truckers and suppliers for this specific project. Include initial contact and follow-up dates, as well as methods of contact (Phone, Fax, Email, etc.).

The good faith effort submission should include evidence of the solicitation effort such as; copies of request for bids sent to DBE firms with the name of the DBE firms clearly identified; fax confirmation sheets showing the date, fax number, name of DBE firm, confirmation the fax was sent; list of all DBE firms called time of call, person contacted and response; or email lists with time/day sent clearly indicated etc.

Subcontractor/Supplier/Service provider		DBE?		Phone #	Dates, Method of Contact		Description of Work	Dollar Amount of Quote
		Yes	No		DATES	METHODS		
1		☐	☐					
2		☐	☐					
3		☐	☐					
4		☐	☐					
5		☐	☐					
6		☐	☐					
7		☐	☐					
8		☐	☐					
9		☐	☐					
10		☐	☐					
		☐	☐					
		☐	☐					

Make additional copies of this page as necessary.

Prime Contractor _____ State Project # _____

Make additional copies of this page as necessary.

PART E - DBE COMMITMENTS (All Primes complete this section.)

DBEs COMMITMENTS List only DBEs who have executed Exhibit A forms. DBE Contractor Information					Description of Work	Dollar Amount Of Bid/Proposal.
1.	DBE Contractor Name					
	Contact Name					
	Address					
	Federal Tax #		E-mail			
	Phone		Fax:			
2.	DBE Contractor Name					
	Contact Name					
	Address					
	Federal Tax #		E-mail			
	Phone		Fax			
3.	DBE Contractor Name					
	Contact Name					
	Address					
	Federal Tax #		E-mail			
	Phone		Fax			
4.	DBE Contractor Name					
	Contact Name					
	Address:					
	Federal Tax #		E-mail			
	Phone		Fax			
5.	DBE Contractor Name					
	Contact Name					
	Address:					
	Federal Tax #		E-mail			
	Phone		Fax			

Prime Contractor _____ State Project # _____

Make additional copies of this page as necessary.

PART F – NON-DBE QUOTES SUBMITTED (All Primes complete this section.)

NON-DBE COMMITMENTS List all non-DBE firms who provided quotes or bid proposals. Indicate whether the quotes were accepted. NON-DBE Contractor Information					Description of Work	Dollar Amount Of Bid/Proposal.	Will Firm Be Used?
1.	NON-DBE Contractor Name						Y or N
	Contact Name						
	Address						
	Federal Tax #		E-mail				
	Phone		Fax:				
2.	NON-DBE Contractor Name						Y or N
	Contact Name						
	Address						
	Federal Tax #		E-mail				
	Phone		Fax				
3.	NON-DBE Contractor Name						Y or N
	Contact Name						
	Address						
	Federal Tax #		E-mail				
	Phone		Fax				
4.	NON-DBE Contractor Name						Y or N
	Contact Name						
	Address:						
	Federal Tax #		E-mail				
	Phone		Fax				

PART G - DBEs QUOTED BUT NOT SELECTED (Complete this part only if DBE goal is not met.)

If DBE quotes were rejected, attach a separate sheet of paper explaining the specific basis for rejecting any DBE quote.
Note: Additional cost is not in itself sufficient reason for rejecting a DBE quote. However, prime contractors need not accept excessive or unreasonable DBE quotes. The contractor's standing within its industry, membership in specific groups (for example union vs. non-union employee status) are not legitimate causes for the rejection or non-solicitation of bid in the contractor's efforts to meet the project goal. (See Instructions attached to this form.).

QUOTED DOLLARS	DBEs WHO QUOTED, BUT WERE NOT SELECTED	TYPE OF WORK QUOTED	REASON NOT SELECTED
1.			Clearly state specific basis for rejecting the DBE on a separate sheet of paper
2.			Clearly state specific basis for rejecting the DBE on a separate sheet of paper
3.			Clearly state specific basis for rejecting the DBE on a separate sheet of paper
4.			Clearly state specific basis for rejecting the DBE on a separate sheet of paper
5.			Clearly state specific basis for rejecting the DBE on a separate sheet of paper
6.			Clearly state specific basis for rejecting the DBE on a separate sheet of paper
7.			Clearly state specific basis for rejecting the DBE on a separate sheet of paper
8.			Clearly state specific basis for rejecting the DBE on a separate sheet of paper
9.			Clearly state specific basis for rejecting the DBE on a separate sheet of paper
10.			Clearly state specific basis for rejecting the DBE on a separate sheet of paper
11.			Clearly state specific basis for rejecting the DBE on a separate sheet of paper
12.			Clearly state specific basis for rejecting the DBE on a separate sheet of paper
13.			Clearly state specific basis for rejecting the DBE on a separate sheet of paper
14.			Clearly state specific basis for rejecting the DBE on a separate sheet of paper
15.			Clearly state specific basis for rejecting the DBE on a separate sheet of paper
16.			Clearly state specific basis for rejecting the DBE on a separate sheet of paper
17.			Clearly state specific basis for rejecting the DBE on a separate sheet of paper
18.			Clearly state specific basis for rejecting the DBE on a separate sheet of paper
19.			Clearly state specific basis for rejecting the DBE on a separate sheet of paper
20.			Clearly state specific basis for rejecting the DBE on a separate sheet of paper
NUMBER OF DBEs SOLICITED			

PART H – CERTIFICATION / GOOD FAITH EFFORTS AFFIDAVIT **(All Primes complete this section.)**

STATE OF MINNESOTA
COUNTY OF _____

I, _____, being first duly sworn, state as follows:
(Full Name)

1. I am the _____ of _____
(Title) (Name of Individual, Company, Partnership, or Corporation)

that has been identified as the apparent low bidder of the State Project _____.

2. I have the authority to make this affidavit for and on behalf of the apparent low bidder.

3. The information provided in the attached Certificate of Good Faith Efforts is true and accurate to the best of my belief.

SIGNATURE (Bidder or Authorized Representative)	TITLE	DATE

Subscribed and sworn to before me

This _____ day of _____, 20

_____
Notary Public

My commission expires _____, 20_____

Under Sec. 26.107 of "49 CFR Part 26," dated February 2, 1999, if at any time, the Department or a recipient has reason to believe that any person or firm has willfully and knowingly provided incorrect information or made false statements, the Department may initiate suspension or debarment proceedings against the person or firm under 49 CFR Part 29, take enforcement action under 49 CFR Part 31, Program Fraud and Civil Remedies, and/or refer the matter to the Department of Justice for criminal prosecution under 18 U.S.C. 1001, which prohibits false statements in Federal programs.

Minnesota Department of Transportation
Office of Civil Rights

Contractor Payment Form

State Project Number _____ **Prime Contractor:** _____ **1st Tier Sub-Contractor:** _____

Payment Reporting Period: From: _____ To: _____

Instructions: All Contractors making payments to Contractors/Subcontractors/Suppliers/Service Providers, regardless of their tier or DBE status, are required to complete and submit this form to the Mn/DOT Office of Civil Rights (OCR), each time payments are made to sub-contractors until final payment is made. Failure to comply with this form and Minnesota's prompt payment law may cause progress payments to be withheld. Submit one copy of this form to the Mn/DOT OCR and one copy to the Project Engineer, no later than ten (10) days after receiving payment from Mn/DOT.

Contractor Information		**Original Contract Amount**	**Committed DBE %**	**Actual DBE % to Date**
Name:				
Address:				
Phone:				

Name of Subcontractor/Supplier	**DBE? (Check if Yes)**	**Description of Work**	**Subcontract Amount**
1.	☐	1.	1.
2.	☐	2.	2.
3.	☐	3.	3.
4.	☐	4.	4.
5.	☐	5.	5.
6.	☐	6.	6.

Amount of Current Payment	**Total Sub-Contractor Payment-To-Date**	**% Paid to date**	**Final Payment? Yes/No**
1.	1.	1.	1.
2.	2.	2.	2.
3.	3.	3.	3.
4.	4.	4.	4.
5.	5.	5.	5.
6.	6.	6.	6.

Company Officials Signature & Title	**Date Signed**	**Name & Title of Individual Completing Report (Type or Print Clearly)**	
Title:		Title:	
Phone:	Fax:	Phone:	Fax:

Minnesota Department of Transportation
Office of Civil Rights

Contractor Payment Form Instructions

All Contractors making payments to Contractors/Subcontractors/Suppliers/Service Providers, regardless of their tier or DBE status, are required to complete and submit this form to the Mn/DOT Office of Civil Rights (OCR), each time payments are made to sub-contractors until final payment is made. Failure to comply with this form and Minnesota's prompt payment law may cause progress payments to be withheld. Submit one copy of this form to the Mn/DOT OCR and one copy to the Project Engineer, no later than ten (10) days after receiving payment from Mn/DOT.

State Project Number: As identified by Mn/DOT

Prime Contractor: The contractor who was awarded the project.

1st Tier Sub-Contractor: If a subcontractor has a subcontractor, list the 1st tier sub here and then list all of the 2nd tier Subcontractor(s) in the Name of Subcontractor/Supplier area. *All areas should be filled in regarding the prime as well.*

Payment Reporting Period: This should reflect the current payment period.

Contractor Information: Contractor's information who is making the payments. This must be filled out completely.

Original Contract Amount: Prime contractor's contract dollar amount.

Committed DBE%: The DBE commitment certified in the prime's bid is the minimum percentage of DBE participation on the project.

Actual DBE % to Date: The percent met to date.

Name of Subcontractor/Supplier: Company who is working for the prime contractor on this project.
(If a sub was contracted for more than one contract, list each contract separately.)

DBE?: Check this box if the subcontractor is a certified DBE in Minnesota. You can find a listing of the DBE firms certified in Minnesota at http://www.dot.state.mn.us/eeocm/ucpdirectory.html .

Description of Work: The type of work the subcontractor was contracted for.

Subcontract Amount: The dollar amount the subcontractor was contracted for.

Amount of Current Payment: The current dollar amount being paid to the sub.

Total Sub-Contractor Payment-to-Date: Total dollar amount paid to the sub including the current payment.

% Paid to Date: Percentage of total payments made in comparison to the prime's award amount.

Final Payment?: Indicate whether this is the final payment being made to the sub.

Company Officials Signature & Title: Self explanatory

Name & Title of Individual Completing Report: Self explanatory

If you have questions on completing the form, call the Office of Civil Rights at (651) 366-3073.

DBE Total Payment Affidavit

Pursuant to Mn/DOT Standard Specifications for Construction, Section 1908, the following DBE Total Payment Affidavit shall be executed by the Prime Contractor after all work contracted to be performed by DBEs has been satisfactorily completed. Identify each DBE firm that worked on the project and the dollar amount of the subcontract. If the dollar value of a DBE firm's total work is less than the DBE's original subcontract, please attach an explanation.

State Project Number: _____

STATE OF MINNESOTA
COUNTY OF _____

I, _____, being first duly sworn, state as follows:
(Full Name)

1. I am the authorized representative of _____(Name of Individual, Company, Partnership or Corporation)and I have the authority to make this affidavit for and on behalf of said Prime Contractor.

2. The following DBE Subcontractors/Suppliers/Service Providers/Sub-Consultants have performed work on the above project with a total dollar value of:

	Name of DBE Firm	Dollar Amount of Subcontract	Total Dollar Amount
1.			
2.			
3.			
4.			
5.			
6.			
7.			
8.			

3. I have fully informed myself regarding the accuracy of the statements made in this Affidavit.

Signed: _____
(Prime Contractor or Authorized Representative)

Subscribed and sworn to before me
This _____ day of _____, 20____
_____
(Notary Public)

My commission expires _____, 20____

Prepare Affidavit in duplicate. Submit one original to the Project Engineer, and one original to:
Mn/DOT's Office of Civil Rights
395 John Ireland Blvd., MS 170
St. Paul, MN 55155

No. 1908 – Standard Specifications for Construction
Unless the Contractor has presented an Affidavit showing the total dollar amounts of work performed by Disadvantaged Business Enterprises (DBE), final payment may be withheld.

EQUAL EMPLOYMENT OPPORTUNITY (EEO) SPECIAL PROVISIONS

This section of Special Provisions contains the Equal Employment Opportunity (EEO) rules and regulations for highway construction projects in Minnesota which are federally and/or State funded.

The source of funding determines which EEO regulations and goals (Federal and/or State goals) apply to a specific project. When a project contains funding from both Federal and State sources, both sets of regulations apply, and the Minnesota Department of Transportation (MnDOT) monitors and reviews projects at both levels.

If the project contains any Federal funding, and has a total dollar value exceeding $10,000, Federal EEO regulations and goals apply (pages 2, 6, 7-8, 9-14, 15, 16-17, 22-26, 27-38). The MnDOT Office of Civil Rights monitors and reviews these projects on behalf of the Federal Highway Administration (FHWA), under Federal statutes (23 USC 140) and rules (23 CFR 230).

If the project contains any State funding, and has a total dollar value exceeding $100,000, State EEO regulations and goals apply (pages 2, 3, 4, 5, 6, 9-14, 16-22). MnDOT's Office of Civil Rights monitors and reviews these projects in conjunction with the Minnesota Department of Human Rights under Minnesota Statutes §363A.36 and its accompanying rules.

MnDOT has established a single review and monitoring process which meets both Federal and State requirements.

Please note that Pages 23-38 of these Special Provisions may be omitted from projects with no Federal funding.

CONTENTS

Notice of Requirement for Affirmative Action 2
Notice of Pre-Award Reporting Requirements 3
Minnesota Affirmative Action Requirements 4
Appropriate Work Place Behavior 5
Notice to All Prime and Subcontractors: Reporting Requirements 6
Specific Federal Equal Employment Opportunity Responsibilities 7
Standard Federal and State Equal Employment Construction Contract Specifications 9
Equal Opportunity Clause 15
Minority and Women Employment Goals Chart 16
Sample Summary of Employment Activity, Form EEO-12 18
Sample Monthly Employment Compliance Report, Form EEO-13 20
EEO Compliance Review Report 22
On-The-Job Training Program: Trainee Assignment 23
Certification of On-the-Job Training Hours: Federal-Aid Projects 24
On-the-Job Training (OJT) Program Approval Form 25
On-the-Job Training (OJT) Program Trainee Termination Form 26
Required Contract Provisions: Federal-Aid Construction Contracts 27

NOTICE OF REQUIREMENT FOR AFFIRMATIVE ACTION TO ENSURE EQUAL EMPLOYMENT OPPORTUNITY (23 USC 140, 23 CFR 230 and Minnesota Statute §363A.36)

1. The offerer's or bidder's attention is called to the "Minnesota Affirmative Action Requirements" (EEO Page 4), the "Specific Federal Equal Employment opportunity Responsibilities" (EEO Pages 7-8), the "Standard Federal and State Equal Employment Opportunity Construction Contract Specifications" (EEO Pages 9-14), the "Equal Opportunity Clause" (EEO Page 15) and "Required Contract Provisions - Federal-Aid Construction Contracts" (EEO Pages 27-38).

2. The goals and timetables for minority and women participation, expressed in percentage terms of hours of labor for the Contractor's aggregate work force in each trade on all construction work in the covered area, are as shown on EEO Pages 16-17.

   These goals are applicable to all the Contractor's construction work (whether or not it is State or State assisted, Federal or federally assisted) performed in the covered area. If the Contractor performs construction work in a geographical area located outside of the covered area, it shall apply the goals established for such geographical area where the work is actually performed. With regard to this second area, the Contractor also is subject to the goals for both its federally involved and non-federally involved construction.

   The Contractor's compliance with the regulations in 41 CFR Part 60-4, and/or Minnesota Statutes §363A.36 and its accompanying rules shall be based on its implementation of the Equal Opportunity Clause, specific affirmative action obligations required by the specifications set forth in 41 CFR 60-4.3(a) for Federal or federally assisted projects, and Minnesota Statutes §363A.36, and its accompanying rules for State or State assisted projects, and its efforts to meet the goals established for the geographical area where the contract resulting from this solicitation is to be performed. The hours of minority and women employment and training must be substantially uniform throughout the length of the contract, and in each trade, and the Contractor shall make a good faith effort to employ minorities and women evenly on each of its projects. The transfer of minority and women employees or trainees from contractor to contractor or from project to project for the sole purpose of meeting the Contractor's goals shall be a violation of the contract, the Executive Order and the regulations in 41 CFR Part 60-4 for Federal or federally-assisted projects and/or Minnesota Statutes §363A.36 and its accompanying rules for state or state-assisted projects. Compliance with the goals will be measured against the total work hours performed.

3. If the contract is federally funded, the Contractor shall provide written notification to the Director of the Office of Federal Contract Compliance Programs (OFCCP) within ten working days of award of any construction subcontract in excess of $10,000 at any tier for construction work under the contract resulting from this solicitation. If the contract is state funded, the Contractor shall provide written notification to the Compliance Division, Minnesota Department of Human Rights, Freeman Building, 625 Robert Street North, Saint Paul, Minnesota 55155 within ten working days of award of any construction subcontract in excess of $100,000 at any tier for construction work under the contract resulting from this solicitation. The notification shall list the name, address and telephone number of the Subcontractor; employer identification number of the Subcontractor; estimated dollar amount of the subcontract; estimated starting and completion dates of the subcontract; and the geographical area in which the contract is to be performed.

4. As used in this Notice, and in the contract resulting from this solicitation, the "covered area" is the county or counties of the State of Minnesota where the work is to be performed.

NOTICE TO ALL PRIME AND SUBCONTRACTORS
PRE-AWARD REPORTING REQUIREMENTS

In order to ensure compliance with Federal and State laws and regulations (23 USC 140, and 23 CFR 230, and Minnesota Statutes §363A.36) and to ensure Mn/DOT's ability to monitor and enforce compliance efforts, the following requirements apply if the apparent low bid exceeds $ 5,000,000.00:

1) The Apparent Low Bidder ("ALB") must provide to Mn/DOT the "EEO-8 Form" (also entitled "EEO Compliance Review Report"), which must provide detail on the contractor's total company workforce in the State of Minnesota during the twelve month period preceding July 30th of the previous year (Office and/or clerical personnel need not to be included).

2) The ALB must provide to Mn/DOT a work plan for meeting the minority and women employment goals established by the Minnesota Department of Human Rights, for the project in question. The work plan must include, at a minimum (1) how the ALB will incorporate its current minority and women employees in the ALB's efforts to meet the established goals; and (2) a contingency plan if the ALB has determined that its current workforce is not sufficient in order to achieve the established employment goals. If the ALB relies in whole or in part upon unions as a source of employees, then the ALB must (1) include a list of established organizations that are likely to yield qualified minority and women candidates if those union(s) are unable to provide a reasonable flow of minority and women candidates in their work plan; and (2) document the method by which these organizations will refer candidates to the ALB for employment opportunities. All bidders are hereby notified that the U.S. Department of Labor has determined that a contractor will not be excused from complying with the Federal and State laws and regulations cited above based solely on the fact that a contractor has a collective bargaining agreement with a union providing for the union to be the exclusive source of referral and that the union failed to refer minority employees. A contractor may obtain a list of organizations likely to yield qualified minority and women candidates from the Mn/DOT Office of Civil Rights.

3) The ALB must provide to Mn/DOT the ALB's total workforce and labor projections for the project (represented in hours), the ALB's projected total number of minority hours for the project, and the ALB's projected total number of women hours for the project. The details must include the trade(s) that will be utilized in order to complete the project.

The ALB must submit documents as required to comply with this section no later than five business days after the date that bids for the contract are opened. The five day period starts the business day following the date that bids were opened. The required documents must be received prior to Contract Award, and must be sent to the Mn/DOT Office of Civil Rights – 395 John Ireland Blvd., Mail Stop 170 St. Paul, MN 55155-1899. Submittal of the documents described in (1), (2) and (3) is required for contract award to the ALB. The submitted documents will be used as a tool to assist contractors in meeting employment goals; the content itself will not be evaluated for the purpose of determining contract award.

MINNESOTA AFFIRMATIVE ACTION REQUIREMENTS

1. It is hereby agreed between the parties to this contract that Minnesota Statutes, Section §363A.36, and its accompanying rules are incorporated into any contract between these parties based upon this specification or any modification of it. A copy of Minnesota Statutes, Section §363A.36, and its accompanying rules is available upon request from the contracting agency. The Contractor hereby agrees to comply with the rules and relevant orders of the Minnesota Department of Human Rights issued pursuant to the Minnesota Human Rights Act.

2. It is hereby agreed between the parties to this contract that this agency requires that the Contractor meet affirmative action criteria as provided for by Minnesota Statutes §363A.36 and its accompanying rules. It is the intent of the Minnesota Department of Transportation to fully carry out its responsibility for requiring affirmative action, and to implement sanctions for failure to meet these requirements. Failure by a contractor to implement an affirmative action plan, meet project employment goals for minority and women employment or make a good faith effort to do so may result in revocation of his/her Certificate of Compliance or suspension or revocation of the contract (Minnesota Statutes §363A.36).

3. Under the affirmative action obligation imposed by the Human Rights Act, Minnesota Statutes, Section §363A.36, contractors shall take affirmative action to employ and advance in employment minority, female, and qualified disabled individuals at all levels of employment. Affirmative action must apply to all employment practices, including but not limited to hiring, upgrading, demotion or transfer; recruitment or recruitment advertising; layoff or termination; rates of pay or other forms of compensation, and selection for training, including apprenticeship. The Contractor shall recruit, hire, train and promote persons in all job titles, without regard to race, color, creed, religion, sex, national origin, marital status, status with regard to public assistance, physical or mental disability, sexual orientation or age except where such status is a bona fide occupational qualification. These affirmative action requirements of the Minnesota Human Rights Act are consistent with but broader than the Federal requirements as covered in this contract.

4. Affirmative Action for disabled workers. The Contractor shall not discriminate against any employee or applicant for employment because of a physical or mental disability in regard to any position for which the employee or applicant for employment is qualified. The Contractor agrees to take affirmative action to employ, advance in employment, and otherwise treat qualified disabled individuals without discrimination based upon their physical or mental disability in all employment practices such as employment, upgrading, demotion or transfer, recruitment, advertising, layoff or termination, rates of pay or other forms of compensation, and selection for training (including apprenticeship). In the event of the Contractor's noncompliance with the requirements of this clause, actions for noncompliance may be taken in accordance with Minnesota Statutes, section §363A.36 and the rules and relevant orders of the Minnesota Department of Human Rights pursuant to the Minnesota Human Rights Act.

5. The Contractor agrees to post in conspicuous places, available to employees and applicants for employment, notices in a form to be prescribed by the commissioner of the Minnesota Department of Human Rights. Such notices shall state the Contractor's obligation under the law to take affirmative action to employ and advance in employment minority, women and qualified disabled employees and applicants for employment, and the rights of applicants and employees. **A poster entitled "Contractor Non-discrimination is the Law" may be obtained from: Compliance Unit, Minnesota Department of Human Rights, Freeman Building, 625 Robert Street North, Saint Paul, Minnesota 55155**. (651) 539-1100, TTY 296-1283, Toll Free 1-800-657-3704.

6. The Contractor shall notify each labor union or representative of workers with which he/she has a collective bargaining agreement or other contract understanding, that the Contractor is bound by the terms of Minnesota Statutes, section §363A.36 of the Minnesota Human Rights Act, and is committed to take affirmative action to employ and advance in employment minority, women and qualified physically and mentally disabled individuals.

APPROPRIATE WORK PLACE BEHAVIOR ON Mn/DOT CONSTRUCTION PROJECTS UTILIZING STATE FUNDS

It is the Minnesota Department of Transportation's (MnDOT's) policy to provide a workplace free from violence, threats of violence, harassment and discrimination. MnDOT has established a policy of zero tolerance for violence in the workplace. Contractors who perform work on MnDOT construction projects, or local government entities or public agencies utilizing state funds on highway construction projects, shall maintain a workplace free from violence, harassment and discrimination (See definitions, below).

Definitions:

1. Violence is the threatened or actual use of force which results in or has a high likelihood of causing fear, injury, suffering or death. Employees are prohibited from taking reprisal against anyone who reports a violent act or threat.

2. Harassment is the conduct of one employee (toward another employee) which has the purpose or effect of 1) unreasonably interfering with the employee's work performance, and/or 2) creating an intimidating, hostile or offensive work environment. Harassment is not legitimate job-related efforts of supervisor to direct/evaluate an employee or to have an employee improve work performance.

A. Unlawful discriminatory harassment is harassment which is based on these characteristics: race, color, creed, religion, national origin, sex, disability, age, marital status, status with regard to public assistance or sexual orientation. Managers, supervisors and employees shall not take disciplinary or retaliatory action against employees who make complaints of sexual harassment.

Sexual harassment is unwelcome sexual advances, requests for sexual favors, or sexually motivated physical contact, or other verbal or physical conduct or communication of a sexual nature, when submission to that conduct or communication is 1) made a term or condition, either explicitly or implicitly, of obtaining employment; or 2) is used as a factor in decisions affecting an individual's employment; or 3) when that conduct or communication has the purpose or effect of substantially interfering with an individual's employment or creating an intimidating, hostile or offensive work environment, and the employer knows or should have known of the existence of the harassment and fails to take timely and appropriate action. Examples include but are not limited to insulting or degrading sexual remarks or conduct; threats, demands or suggestions that status is contingent upon toleration or acquiescence to sexual advances; displaying in the workplace sexually suggestive objects, publications or pictures, or retaliation against employees for complaining about the behavior cited above or similar behaviors.

B. General harassment is harassment which is not based on the above characteristics. Examples may include, but are not limited to: physically intimidating behavior and/or threats of violence; use of profanity (swearing), vulgarity; ridiculing, taunting, belittling or humiliating another person; inappropriate assignments of work or benefits; derogatory name calling.

3. Discrimination includes actions which cause a person, solely because of race, color, creed, religion, national origin, sex, disability, age, marital status, status with regard to public assistance or sexual orientation to be subject to unequal treatment.

Prime Contractors who work on MnDOT projects shall ensure that their managers, supervisors, foremen/women and employees are familiar with MnDOT's policy on appropriate work place behavior; and shall ensure that their subcontractors are familiar with this policy. Managers, supervisors and foremen/women will respond to, document, and take appropriate action in response to all reports of violence, threats of violence, harassment or discrimination. Failure to comply with this policy may result in cancellation, termination or suspension of contracts or subcontracts currently held and debarment from further such contracts or subcontracts as provided by statute. If you need additional information or training regarding this policy, please contact the Office of Civil Rights at (651) 366-3073.

NOTICE TO ALL PRIME AND SUBCONTRACTORS
REPORTING REQUIREMENTS

1. In order to monitor compliance with Federal Statutes 23 USC 140 and 23 CFR 230, and Minnesota Statutes §363A.36, all prime contractors and subcontractors are required to complete a Mn/DOT Monthly Employment Compliance Report each month for each project (Form EEO-13, sample copy at EEO Pages 20-21.) Prime contractors are also required to complete a Contractor Employment Data Report (Form EEO-12, sample copy at EEO Pages 18-19) once prior to work commencing on the project, unless one has been completed already within the calendar year.

   The prime contractor of each project collects Monthly Employment Compliance Reports from each subcontractor who performed work during the month, and completes a Monthly Employment Compliance Report on its own work force. **For the month of July only, an EEO-13 is required for each payroll period within the month of July**. The prime contractor submits the EEO-13 forms to the Mn/DOT Project Engineer by the 15th day of the subsequent month.

   Failure to submit the required reports in the allowable time frame will be cause for the imposition of contract sanctions.

   It is the intent of Mn/DOT to implement monitoring measures on each project to ensure that each prime contractor and subcontractor is promoting the full realization of equal employment opportunities. Any project may be scheduled for an in depth on-site contract compliance review. During the scheduled on-site review, the Contractor will be required to provide to Mn/DOT documentation of its "good faith efforts" as shown in EEO Pages 10-13, at 7 a-p of this contract.

2. If a Federally funded project requires On-the-Job-Training (OJT) participation, information is provided in the contract and can be located by referring to the Table of Contents for Division S. (OJT is also listed as a bid line item under Trainees.) When a contract requires OJT participation, the Prime Contractor shall submit a training plan as indicated in the Proposal. The training plan shall include the job classification titles of trainees, planned training activities and the approximate start date of trainees.

3. When a Contractor selects a trainee applicant for OJT, the Contractor completes an On the Job Training Program-Trainee Assignment form (sample copy at EEO Page 23) and submits it to the Contract Compliance Specialist (CCS) assigned to the project for approval. The CCS notifies the Contractor and Project Engineer when the applicant is approved.

4. Hours of work performed by OJT employees shall be documented on a monthly basis on the Certification of On-The-Job Training Hours form, (Mn/DOT Form No. 21860, sample copy at EEO Page 24). The Contractor shall submit the original and one copy to the Project Engineer, and one copy to the CCS assigned to the project.

Do not remove forms from this contract. Please duplicate forms from the copies in this contract, or the Mn/DOT Office of Civil Rights will provide these forms upon request. Please call the Office of Civil Rights, (651) 366-3073.

SPECIFIC FEDERAL EQUAL EMPLOYMENT OPPORTUNITY RESPONSIBILITIES (23 CFR 230, Subpart A, Appendix A, FAPG June 6, 1996)

1. General.
a. Equal employment opportunity requirements not to discriminate and to take affirmative action to assure equal opportunity as required by Executive Order 11246 and Executive Order 11375 are set forth in Required contract Provisions (Form PR-1273 or 1316, as appropriate) and these Special Provisions which are imposed pursuant to Section 140 of title 23, U.S.C., as established by Section 22 of the Federal-Aid Highway Act of 1968. The requirements set forth in these Special Provisions shall constitute the specific affirmative action requirements for project activities under this contract and supplement the equal employment opportunity requirements set forth in the Required Contract Provisions.
b. The contractor will work with the State highway agencies and the Federal Government in carrying out equal employment opportunity obligations and in their review of his/her activities under the contract.
c. The contractor and all his/her subcontractors holding subcontracts not including material suppliers, of $10,000 or more, will comply with the following minimum specific requirement activities of equal employment Opportunity: (The equal employment opportunity requirements of Executive Order 11246, as set forth in volume 6, Chapter 4, Section 1, Subsection 1 of the Federal-Aid Highway program Manual, are applicable to material suppliers as well as contractors and subcontractors.) The contractor will include these requirements in every subcontract of $10,000 or more with such modification of language as is necessary to make them binding on the subcontractor.

2. Equal Employment Opportunity Policy. The contractor will accept as his operating policy the following statement which is designed to further the provision of equal employment opportunity to all persons without regard to their race, color, religion, sex, or national origin, and to promote their full realization of equal employment through a positive continuing program:

It is the policy of this Company to assure that applicants are employed, and that employees are treated during employment, without regard to their race, religion, sex, color, or national origin. Such action shall include: employment, upgrading, demotion, or transfer; recruitment or recruitment advertising; layoff or termination; rates of pay or other forms of compensation; and selection for training, including apprenticeship, pre apprenticeship, and/or on-the-job training.

3. Equal Employment Opportunity Officer. The contractor will designate and make known to State highway agency contracting officers an equal employment opportunity officer (hereinafter referred to as the EEO Officer) who will have the responsibility for and must be capable of effectively administering and promoting an active contractor program of equal employment opportunity and who must be assigned adequate authority and responsibility to do so.

4. Dissemination of Policy.
a. All members of the contractor's staff who are authorized to hire, supervise, promote, and discharge employees, or who recommend such action, or who are substantially involved in such action will be made fully cognizant of, and will implement, the contractor's equal employment opportunity policy and contractual responsibilities to provide EEO in each grade and classification of employment. To ensure that the above agreement will be met, the following actions will be taken as a minimum:
(1). Periodic meetings of supervisory and personnel office staff will be conducted before the start of work and then not less often than once every six months, at which time the contractor's equal employment opportunity policy and its implementation will be reviewed and explained. The meetings will be conducted by the EEO Officer or other knowledgeable company official.
(2). All new supervisory or personnel office employees will be given a thorough indoctrination by the EEO Officer or other knowledgeable company official, covering all major aspects of the contractor's equal employment opportunity obligations within thirty days following their reporting for duty with the contractor.
(3). All personnel who are engaged in direct recruitment for the project will be instructed by the EEO officer or appropriate company official in the contractor's procedures for locating and hiring minority group employees.
b. In order to make the contractor's equal employment policy known to all employees, prospective employees and potential sources of employees, i.e., schools, employment agencies, labor unions (where appropriate), college placement officers, etc., the contractor will take the following actions:
(1). Notices and posters setting forth the contractor's equal employment opportunity policy will be placed in areas readily accessible to employees, applicants for employment and potential employees.
(2). The contractor's equal employment opportunity policy and the procedures to implement such policy will be brought to the attention of employees by means of meetings, employee handbooks, or other appropriate means.

5. Recruitment.
a. When advertising for employees, the contractor will include in all advertisements for employees the notation "An Equal Opportunity Employer." All such advertisements will be published in newspapers or other publications having a large circulation among minority groups in the area from which the project work force would normally be derived.
b. The contractor will, unless precluded by a valid bargaining agreement, conduct systematic and direct recruitment through public and private employee referral sources likely to yield qualified minority group applicants, including, but not limited to, State employment agencies, schools, colleges and minority group organizations. To meet this requirement, the contractor will, through his/her EEO Officer, identify sources of potential minority group employees, and establish with such identified sources procedures whereby minority group applicants may be referred to the contractor for employment consideration.
In the event the contractor has a valid bargaining agreement providing for exclusive hiring hall referrals, he is expected to observe the provisions of that agreement to the extent that the system permits the contractor's compliance with equal employment opportunity contract provisions. (The U.S. Department of Labor has held that where the implementation of such agreements have the effect of discriminating against minorities or women, or obligates the contractor to do the same, such implementation violates Executive Order 11246, as amended.)
c. The contractor will encourage his present employees to refer minority group applicants for employment by posting appropriate notices or bulletins in areas accessible to all such employees. In addition, information and procedures with regard to referring minority group applicants will be discussed with employees.

6. Personnel Actions. Wages, working conditions, and employee benefits shall be established and administered, and personnel actions of every type, including hiring, upgrading, promotion, transfer, demotion, layoff, and termination, shall be taken without regard to race, color, religion, sex, or national origin. The following procedures shall be followed:
a. The contractor will conduct periodic inspections of project sites to insure that working conditions and employee facilities do not indicate discriminatory treatment of project site personnel.
b. The contractor will periodically evaluate the spread of wages paid within each

SPECIFIC FEDERAL EQUAL EMPLOYMENT OPPORTUNITY RESPONSIBILITIES *(cont.)*

classification to determine any evidence of discriminatory wage practices.
c. The contractor will periodically review selected personnel actions in depth to determine whether there is evidence of discrimination. Where evidence is found, the contractor will promptly take corrective action. If the review indicates that the discrimination may extend beyond the actions reviewed, such corrective action shall include all affected persons.
d. The contractor will promptly investigate all complaints of alleged discrimination made to the contractor in connection with his/her obligations under this contract, will attempt to resolve such complaints, and will take appropriate corrective action within a reasonable time. If the investigation indicates that the discrimination may affect persons other than the complainant, such corrective action shall include such other persons. Upon completion of each investigation, the contractor will inform every complainant of all his avenues of appeal.

7. Training and Promotion.
a. The contractor will assist in locating, qualifying, and increasing the skills of minority group and women employees and applicants for employment.
b. Consistent with the contractor's work force requirements and as permissible under Federal and State regulations, the contractor shall make full use of training programs, i.e. apprenticeship, and on-the-job training programs for the geographical area of contract performance. Where feasible, 25 percent of apprentices or trainees in each occupation shall be in their first year of apprenticeship or training. In the event the Training Special Provision is provided under this contract, this subparagraph will be superseded as indicated in Attachment 2.
c. The contractor will advise employees and applicants for employment of available training programs and entrance requirements for each.
d. The Contractor will periodically review the training and promotion potential of minority group and women employees and will encourage eligible employees to apply for such training and promotion.

8. Unions. If a contractor relies in whole or in part upon unions as a source of employees, the contractor will use his/her best efforts to obtain the cooperation of such unions to increase opportunities for minority groups and women within the unions, and to effect referrals by such unions of minority and female employees. Actions by the contractor either directly or through a contractor's association acting as agent will include the procedures set forth below:
a. The contractor will use best efforts to develop, in cooperation with the unions, joint training programs aimed toward qualifying more minority group members and women for membership in the unions and increasing the skills of minority group members and women so that they may qualify for higher paying employment.
b. The contractor will use best efforts to incorporate an equal employment opportunity clause into each union agreement to the end that such union will be contractually bound to refer applicants without regard to their race, color, religion, sex, or national origin.
c. The contractor is to obtain information as to the referral practices and policies of the labor union except that to the extent such information is within the exclusive possession of the labor union and such labor union refuses to furnish such information to the contractor, the contractor shall so certify to the State highway department and shall set forth what efforts have been made to obtain such information.
d. In the event the union is unable to provide the contractor with a reasonable flow of minority and women referrals within the time limit set forth in the collective bargaining agreement, the contractor will, through independent recruitment efforts, fill the employment vacancies without regard to race, color, religion, sex, or national origin; making full efforts to obtain qualified and/or qualifiable minority group persons and women. (The U.S. Department of Labor has held that it shall be no excuse that the union with which the contractor has a collective bargaining agreement providing for exclusive referral failed to refer minority employees.) In the event the union referral practice prevents thecontractor from meeting the obligations pursuant to Executive Order 11246, as amended, and these special provisions, such contractor shall immediately notify the State highway agency.

9. Subcontracting.
a. The contractor will use his best efforts to solicit bids from and to utilize minority group subcontractors or subcontractors with meaningful minority group and female representation among their employees. Contractors shall obtain lists of minority-owned construction firms from State highway agency personnel.
b. The contractor will use his best efforts to ensure subcontractor compliance with their equal employment opportunity obligations.

10. Records and Reports:
a. The contractor shall keep such records as necessary to determine compliance with the contractor's equal employment opportunity obligations. The records kept by the contractor will be designed to indicate:
(1) The number of minority and non minority group members and women employed in each work classification on the project.
(2) The progress and efforts being made in cooperation with unions to increase employment opportunities for minorities and women (applicable only to contractor's who rely in whole or in part on unions as a source of their work force),
(3) The progress and efforts being made in locating, hiring, training, qualifying, and upgrading minority and female employees, and
(4) The progress and efforts being made in securing the services of minority group subcontractors with meaningful minority and female representation among their employees.
b. All such records must be retained for a period of three years following completion of the contract work and shall be available at reasonable times and places for inspection by authorized representatives of the State highway agency and the Federal Highway Administration.
c. The contractors will submit an annual report to the State highway agency each July for the duration of the project, indicating the number of minority, women, and non-minority group employees currently engaged in each work classification required by the contract work. This information is to be reported on Form PR-1391. If on-the-job training is being required by a "Training Special Provision", the contractor will be required to furnish Form FHWA 1409.

STANDARD FEDERAL AND STATE EQUAL EMPLOYMENT OPPORTUNITY CONSTRUCTION CONTRACT SPECIFICATIONS (41 CFR 60-4.3 and Minnesota Statute §363A.36)

Unless noted, the following apply to both Federal/federally assisted projects and State/state assisted projects. Item 3 applies to Federal/federally assisted projects only

.

1. As used in these specifications:
   a. "Covered area" means the geographical area described in the solicitation from which this contract resulted;
   b. "Director" means Director, Office of Federal Contract Compliance Programs, United States Department of Labor, or any person to whom the Director delegates authority;
   c. "Employer Identification number" means the Federal Social Security number used on the Employer's Quarterly Federal Tax Return, U.S. Treasury Department Form 941.
   d. "Minority" includes:
      (i) Black (all persons having origins in any of the Black African racial groups not of Hispanic origin);
      (ii) Hispanic (all persons of Mexican, Puerto Rican, Cuban, Central or South American or other Spanish Culture or origin, regardless of race);
      (iii) Asian and Pacific Islander (all persons having origins in any of the original peoples of the Far East, Southeast Asia, the Indian Subcontinent, or the Pacific Islands); and
      (iv) American Indian or Alaskan Native (all persons having origins in any of the original peoples of North America and maintaining identifiable tribal affiliations through membership and participation or community identification).

2. Whenever the Contractor, or any Subcontractor at any tier, subcontracts a portion of the work involving any construction trade, it shall physically include in each subcontract in excess of $10,000 ($100,000 for State projects) the provisions of these specifications and the Notice which contains the applicable goals for minority and women participation and which is set forth in the solicitations from which this contract resulted.

3. If the Contractor is participating (pursuant to 41 CFR 60-4, 5) in a Hometown Plan approved by the U.S. Department of Labor in the covered area either individually or through an association, its affirmative action obligations on all work on the Plan area (including goals and timetables) shall be in accordance with that Plan for those trades which have unions participating in the Plan. Contractors must be able to demonstrate their participation in and compliance with the provisions of any such Hometown Plan. Each Contractor or Subcontractor participating in an approved Plan is individually required to comply with its obligations under the EEO clause, and to make a good faith effort to achieve each goal under the Plan in each trade in which it has employees. The overall good faith performance by other Contractors or Subcontractors toward a goal in an approved Plan does not excuse any covered contractor's or subcontractor's failure to take good faith efforts to achieve the Plan goals and timetables.

4. The Contractor shall implement the specific affirmative action standards provided in paragraphs 7(a) to (p) of these specifications (itemized as 4 [a] to [o], Minnesota Rules

STANDARD FEDERAL AND STATE EEO CONSTRUCTION CONTRACT SPECIFICATIONS *(cont.)*

5000.3535). The goals set forth in the solicitation from which this contract resulted are expressed as percentages of the total hours of employment and training of minorities and utilization the Contractor should (shall, for State or state assisted projects) reasonably be able to achieve in each construction trade in which it has employees in the covered area. The Contractor shall make substantially uniform progress toward its goals in each craft during the period specified. Covered construction contractors performing construction work in geographical areas where they do not have a Federal or federally assisted construction contract shall apply the minority and female goals established for the geographical area where the work is being performed. Federal goals are published periodically in the Federal Register in notice form, and such notices may be obtained from any office of Federal Contract Compliance programs or from Federal procurement contracting officers. State goals are published periodically in the State Register in notice form, and may be obtained from the Minnesota Department of Human Rights or the Minnesota Department of Transportation Office of Civil Rights. The Contractor is expected to make substantially uniform progress toward its goals in each craft during the period specified.

5. Neither the provisions of any collective bargaining agreement nor the failure by a union, with whom the Contractor has a collective bargaining agreement, to refer either minorities or women shall excuse the Contractor's obligations under these specifications and Executive Order 11246 and its associated rules and regulations for Federal or federally assisted projects, and Minnesota Statutes, Section §363A.36 of the Minnesota Human Rights Act, or the rules adopted under the Act for State or state assisted projects.

6. In order for the nonworking training hours of apprentices and trainees to be counted in meeting the goals, such apprentices and trainees shall be employed by the Contractor during the training period, and the Contractor must have made a commitment to employ the apprentices and trainees at the completion of their training, subject to the availability of employment opportunities. Trainees shall be trained according to training programs approved by the Minnesota Department of Human Rights, the Minnesota Department of Labor and Industry, or the United States Department of Labor.

7. The Contractor shall take specific affirmative actions to ensure equal employment opportunity. The evaluation of the Contractor's compliance with these specifications must be based upon its effort to achieve maximum results from its actions. The Contractor shall document these efforts fully, and shall implement affirmative action steps at least as extensive as the following (referred to in Minnesota Rules 5000.3535 as items 4(a) to (o):

(a) Ensure and maintain, or for State or state assisted projects make a good faith effort to maintain, a working environment free of harassment, intimidation, and coercion at all sites and in all facilities at which the Contractor's employees are assigned to work. For

STANDARD FEDERAL AND STATE EEO CONSTRUCTION CONTRACT SPECIFICATIONS *(cont.)*

Federal or federally assisted projects, the Contractor, where possible, will assign two or more women to each construction project. The Contractor shall specifically ensure that all foremen, superintendents, and other on-site supervisory personnel are aware of and carry out the Contractor's obligation to maintain such a working environment, with specific attention to minority or women individuals working at such sites or in such facilities.

(b) Establish and maintain a current list of minority and women recruitment sources, provide written notification to minority and women recruitment sources and to community organizations when the Contractor or its unions have employment opportunities available, and maintain a record of the organizations' responses.

(c) Maintain a current file of the names, addresses, and telephone numbers of each minority and woman off-the-street applicant and minority or woman referral from a union, a recruitment source, or community organization and of what action was taken with respect to each individual. If the individual was sent to the union hiring hall for referral and was not referred back to the Contractor by the union or, if referred, not employed by the Contractor, this shall be documented in the file with the reason therefore along with whatever additional actions the Contractor may have taken.

(d) Provide immediate written notification to the commissioner of the Minnesota Department of Human Rights for State or state assisted projects, or the director of the Office of Federal Contract Compliance for Federal or federally assisted projects, when the union, or unions with which the Contractor has a collective bargaining agreement, has not referred to the Contractor a minority person or woman sent by the Contractor, or when the Contractor has other information that the union referral process has impeded the Contractor's efforts to meet its obligations.

(e) Develop on-the-job training opportunities and/or participate in training programs for the areas which expressly include minorities and women, including upgrading programs and apprenticeship and trainee programs relevant to the Contractor's employment needs, especially those programs funded or approved by the State of Minnesota for State or state assisted projects or the Department of Labor, for Federal or federally assisted projects. The Contractor shall provide notice of these programs to the sources compiled under (b).

(f) Disseminate the Contractor's equal employment opportunity policy by providing notice of the policy to unions and training programs and requesting their cooperation in assisting the Contractor in meeting its equal employment opportunity obligations; by including it in any policy manual and collective bargaining agreement; by publicizing it in the company newspaper, annual report, etc.; by specific review of the policy with all management personnel and with all minority and women employees at least once a year; and by posting the company equal employment opportunity policy on bulletin boards accessible to all employees at each location where construction work is performed.

STANDARD FEDERAL AND STATE EEO CONSTRUCTION CONTRACT SPECIFICATIONS *(cont.)*

(g) Review, at least annually, the company's equal employment opportunity policy and affirmative action obligations under these specifications with all employees having any responsibility for hiring, assignment, layoff, termination, or other employment decisions; including specific review of these items with onsite supervisory personnel such as superintendents, general foremen, etc., prior to the first day of construction work at any job site. A written record shall be made and maintained identifying the time and place of these meetings, persons attending, subject matter discussed, and disposition of the subject matter.

(h) Disseminate the Contractor's equal employment opportunity policy externally by including it in any advertising in the news media, specifically including minority and women news media, and providing written notification to and discussing the Contractor's equal employment opportunity policy with other contractors and subcontractors with whom the Contractor does or anticipates doing business.

(i) Direct its recruitment efforts, both oral and written, to minority, women, and community organizations; to schools with minority and women students; and to minority and women recruitment and training organizations serving the Contractor's recruitment area and employment needs. Not later than one month prior to the date for the acceptance of applications for apprenticeship or other training by any recruitment source, the Contractor shall send written notification to organizations, such as the above, describing the openings, screening procedures, and tests to be used in the selection process.

(j) Encourage present minority and women employees to recruit other minority persons and women and, where reasonable, provide after school, summer and vacation employment to minority and women youth, both on the site and in other areas of a Contractor's work force.

(k) Validate all tests and other selection requirements where there is an obligation to do so under 41 CFR Part 60-3. (This requirement applies only to Federal and federally assisted projects.)

(l) Conduct, at least annually, an inventory and evaluation at least of all minority and women personnel for promotional opportunities; and encourage these employees to seek or to prepare for, through appropriate training, such opportunities. (This is Item 4(k) in Minnesota Rules.)

(m) Ensure that seniority practices, job classifications, work assignments, and other personnel practices do not have a discriminatory effect by continually monitoring all personnel and employment-related activities to ensure that the equal employment opportunity policy and the Contractor's obligations under these specifications are being carried out. (This is item 4(l) in Minnesota Rules.)

STANDARD FEDERAL AND STATE EEO CONSTRUCTION CONTRACT SPECIFICATIONS *(cont.)*

(n) Ensure that all facilities and company activities are non segregated except that separate or single-user toilet and necessary changing facilities shall be provided to assure privacy between the sexes. (This is item 4(m) in Minnesota Rules.)

(o) Document and maintain a record of all solicitations or offers for subcontracts from minority and women construction contractors and suppliers, including circulation of solicitations to minority and women contractor associations and other business associations. (This is item 4(n) in Minnesota Rules.)

(p) Conduct a review, at least annually, of all supervisors' adherence to and performance under the Contractor's equal employment opportunity policies and affirmative action obligations. (This is item 4(o) in Minnesota Rules.)

8. Contractors are encouraged to participate in voluntary associations which assist in fulfilling one or more of their affirmative action obligations (7(a) to (p) for Federal or federally assisted projects, and 4(a)-(o) for State or state assisted projects). The efforts of a contractor association, joint contractor-union, contractor-community, or other similar group of which the Contractor is a member and participant, may be asserted as fulfilling any one or more of its obligations under 7(a) to (p) or 4(a) to (o) of these specifications provided that the Contractor actively participates in the group, makes every effort to assure that the group has a positive impact on the employment of minorities and women in the industry, ensures that the concrete benefits of the program are reflected in the Contractor's minority and women work force participation, makes a good faith effort to meet its individual goals and timetables, and can provide access to documentation which demonstrates the effectiveness of actions taken on behalf of the Contractor. The obligation to comply, however, is the Contractor's and failure of such a group to fulfill an obligation shall not be defense for the Contractor's noncompliance.

9. A single goal for minorities and a separate single goal for women have been established. The Contractor however, is required to provide equal employment opportunity and to take affirmative action for all minority groups both male and female, and all women both minority and non-minority. Consequently, the Contractor may be in violation of the Executive Order for Federal or federally assisted projects, or Minnesota Rules for State or state assisted projects, if a particular group is employed in a substantially disparate manner (for example, even though the Contractor has achieved its goals for women generally, the Contractor may be in violation of the Executive Order or Minnesota Rules part 5000.3520 if a specific minority group is under-utilized).

10. The Contractor shall not use the goals and timetables or affirmative action standards to discriminate against any person because of race, color, creed, religion, sex, or national origin. Minnesota Statutes §363A.36, part 5000.3535 (Subp. 7) also prohibits discrimination with regard to marital status, status with regard to public assistance, disability, age, or sexual orientation.

STANDARD FEDERAL AND STATE EEO CONSTRUCTION CONTRACT SPECIFICATIONS *(cont.)*

11. The Contractor shall not enter into any subcontract with any person or firm debarred from government contracts under the federal Executive Order 11246 or a local human rights ordinance, or whose certificate of compliance has been suspended or revoked pursuant to Minnesota Statutes, Section §363A.36.

12. The Contractor shall carry out such sanctions for violation of these specifications and of the equal opportunity clause, including suspension, termination, and cancellation of existing contracts as may be imposed or ordered pursuant to Minnesota Statutes, Section §363A.36, and its implementing rules for State or state assisted projects, or Executive Order 11246, as amended, and its implementing regulations, by the Office of Federal Contract Compliance Programs for Federal or federally assisted projects. Any contractor who fails to carry out such sanctions shall be in violation of these specifications and Minnesota Statutes, Section §363A.36, or Executive Order 11246 as amended.

13. The Contractor, in fulfilling its obligations under these specifications, shall implement specific affirmative action steps, at least as extensive as those standards prescribed in paragraph 7 of these specifications (paragraph 4 in Minnesota Rules 5000.3535), so as to achieve maximum results from its efforts to ensure equal employment opportunity. If the Contractor fails to comply with the requirements of these Specifications or Minnesota Statutes, Section §363A.36 and its implementing rules, or Executive Order 11246 and its regulations, the commissioner or the director shall proceed in accordance with Minnesota Rules part 5000.3570 for State or state assisted projects, or 41 CFR 60-4.8 for Federal or federally assisted projects.

14. The Contractor shall designate a responsible official to monitor all employment-related activity to ensure that the company equal employment opportunity policy is being carried out, to submit reports relating to the provisions hereof as may be required by the Minnesota Department of Human Rights or the Government, and to keep records. Records shall at least include for each employee the name, address, telephone numbers, construction trade, union affiliation if any, employee identification number when assigned, social security number, race, sex, status (for example, mechanic, apprentice trainee, helper, or laborer), dates of changes in status, hours worked per week in the indicated trade, rate of pay, and locations at which the work was performed. Records shall be maintained in an easily understandable and retrievable form; however, to the degree that existing records satisfy this requirement, contractors shall not be required to maintain separate records.

15. Nothing provided in this part shall be construed as a limitation upon the application of other state or federal laws which establish different standards of compliance or upon the application of requirements for the hiring of local or other area residents.

EQUAL OPPORTUNITY CLAUSE

(41 CFR Part 60-1.4 b, 7-1-96 Edition)

The applicant hereby agrees that it will incorporate or cause to be incorporated into any contract for construction work, or modification thereof, as defined in the regulations of the Secretary of Labor at 41 CFR Chapter 60, which is paid for in whole or in part with funds obtained from the Federal Government or borrowed on the credit of the Federal Government pursuant to a grant, contract, loan, insurance, or guarantee, the following equal opportunity clause:

During the performance of this contract, the Contractor agrees as follows:

1. The Contractor will not discriminate against any employee or applicant for employment because of race, color, religion, sex, or national origin. The Contractor will take affirmative action to ensure that applicants are employed and that employees are treated during employment without regard to their race, color, religion, sex, or national origin. Such action shall include, but not be limited to, the following: employment, upgrading, demotion or transfer; recruitment or recruitment advertising; layoffs or termination; rates of pay or other forms of compensation; and, selection for training, including apprenticeship. The Contractor agrees to post in conspicuous places, available to employees and applicants for employment, notices to be provided by the State Highway Agency (SHA) setting forth the provisions of this nondiscrimination clause.
2. The Contractor will, in all solicitations or advertisements for employees placed by or on behalf of the contractor, state that all qualified applicants will receive consideration for employment without regard to race, color, religion, sex, or national origin.
3. The Contractor will send to each labor union or representative of workers with which the Contractor has a collective bargaining agreement or other contract or understanding, a notice to be provided advising the said labor union or workers' representative of the Contractor's commitments under this section, and shall post copies of the notice in conspicuous places available to employees and applicants for employment.
4. The Contractor will comply with all provisions of Executive Order 11246, Equal Employment Opportunity, dated September 24, 1965, and of the rules, regulations (41 CFR Part 60), and relevant orders of the Secretary of Labor.
5. The Contractor will furnish all information and reports required by Executive Order 11246 and by rules, regulations, and orders of the Secretary of Labor, pursuant thereto, and will permit access to its books, records, and accounts by the Federal Highway Administration (FHWA) and the Secretary of Labor for purposes of investigation to ascertain compliance with such rules, regulations, and orders.
6. In the event of the Contractor's noncompliance with the nondiscrimination clauses of this contract, or with any of such rules, regulations, or orders, this contract may be canceled, terminated, or suspended in whole or in part, and the Contractor may be declared ineligible for further Government contracts or federally-assisted construction contracts in accordance with procedures authorized in Executive Order 11246 of September 24, 1965, and such other sanctions as may be imposed and remedies invoked as provided in Executive Order 11246 or by rule, regulation, or order of the Secretary of Labor, or as otherwise provided by law.
7. The Contractor will include the portion of the sentence immediately preceding paragraph (1) and the provisions of paragraph (1) through (7) in every subcontract or purchase order so that such provisions will be binding upon each subcontractor or vendor, unless exempted by rules, regulations, or orders of the Secretary of Labor issued pursuant to Section 204 of Executive Order 11246. The Contractor will take such action with respect to any subcontract or purchase order as the Secretary of Labor, SHA, or the Federal Highway Administration (FHWA) may direct as a means of enforcing such provisions, including sanctions for noncompliance. In the event a contractor becomes a party to litigation by a subcontractor or vendor as a result of such direction, the contractor may request the SHA to enter into such litigation to protect the interest of the State. In addition, the Contractor may request the United States to enter into such litigation to protect the interests of the United States.

The applicant further agrees that it will be bound by the above equal opportunity clause with respect to its own employment practices when it participates in federally assisted construction work: *Provided*, that if the applicant so participating is a State or local government, the above equal opportunity clause is not applicable to any agency, instrumentality or subdivision of such government which does not participate in work on or under the contract.

The applicant agrees that it will assist and cooperate actively with the administering agency and the Secretary of Labor in obtaining the compliance of contractors and subcontractors with the equal opportunity clause and the rules, regulations, and relevant orders of the Secretary of Labor, that it will furnish the administering agency and the Secretary of Labor such information as they may require for the supervision of such compliance, and that it will otherwise assist the administering agency in the discharge of the agency's primary responsibility for securing compliance.

The applicant further agrees that it will refrain from entering into any contract or contract modification subject to Executive Order 11246 of September 24, 1965, with a contractor debarred from, or who has not demonstrated eligibility for, Government contracts and federally assisted construction contracts pursuant to the Executive order and will carry out such sanctions and penalties for violation of the equal opportunity clause as may be imposed upon contractors and subcontractors by the administering agency or the Secretary of Labor pursuant to Part II, Subpart D of the Executive order. In addition, the applicant agrees that if it fails or refuses to comply with these undertakings, the administering agency may take any or all of the following actions: Cancel, terminate, or suspend in whole or in part this grant (contract, loan, insurance, guarantee); refrain from extending any further assistance to the applicant under the program with respect to which the failure or refund occurred until satisfactory assurance of future compliance has been received from such applicant; and refer the case to the Department of Justice for appropriate legal proceedings.

Minority and Women Employment Goals

County	Federal Goals		State Goals	
	Minority Goal	Women Goal	Minority Goal	Women Goal
Aitkin	2.2%	6.9%	5%	6%
Anoka	2.9%	6.9%	22%	6%
Becker	0.7%	6.9%	6%	6%
Beltrami	2.0%	6.9%	6%	6%
Benton	0.5%	6.9%	3%	6%
Big Stone	2.2%	6.9%	4%	6%
Blue Earth	2.2%	6.9%	4%	6%
Brown	2.2%	6.9%	4%	6%
Carlton	1.2%	6.9%	5%	6%
Carver	2.9%	6.9%	22%	6%
Cass	2.2%	6.9%	6%	6%
Chippewa	2.2%	6.9%	4%	6%
Chisago	2.9%	6.9%	3%	6%
Clay	0.7%	6.9%	6%	6%
Clearwater	2.0%	6.9%	6%	6%
Cook	1.2%	6.9%	5%	6%
Cottonwood	0.8%	6.9%	4%	6%
Crow Wing	2.2%	6.9%	6%	6%
Dakota	2.9%	6.9%	22%	6%
Dodge	0.9%	6.9%	4%	6%
Douglas	2.2%	6.9%	6%	6%
Faribault	2.2%	6.9%	4%	6%
Fillmore	0.9%	6.9%	4%	6%
Freeborn	0.9%	6.9%	4%	6%
Goodhue	2.2%	6.9%	4%	6%
Grant	2.2%	6.9%	6%	6%
Hennepin	2.9%	6.9%	32%	6%
Houston	0.6%	6.9%	4%	6%
Hubbard	2.0%	6.9%	6%	6%
Isanti	2.2%	6.9%	3%	6%
Itasca	1.2%	6.9%	5%	6%
Jackson	0.8%	6.9%	4%	6%
Kanabec	2.2%	6.9%	3%	6%
Kandiyohi	2.2%	6.9%	3%	6%
Kittson	2.0%	6.9%	6%	6%
Koochiching	1.2%	6.9%	5%	6%
Lac Qui Parle	2.2%	6.9%	4%	6%
Lake	1.2%	6.9%	5%	6%
Lake of the Woods	2.0%	6.9%	6%	6%
Le Sueur	2.2%	6.9%	4%	6%
Lincoln	0.8%	6.9%	4%	6%
Lyon	0.8%	6.9%	4%	6%

County	Federal Goals		State Goals	
	Minority Goal	Women Goal	Minority Goal	Women Goal
Mahnomen	2.0%	6.9%	6%	6%
Marshall	2.0%	6.9%	6%	6%
Martin	2.2%	6.9%	4%	6%
McLeod	2.2%	6.9%	3%	6%
Meeker	2.2%	6.9%	3%	6%
Mille Lacs	2.2%	6.9%	3%	6%
Morrison	2.2%	6.9%	6%	6%
Mower	0.9%	6.9%	4%	6%
Murray	0.8%	6.9%	4%	6%
Nicollet	2.2%	6.9%	4%	6%
Nobles	0.8%	6.9%	4%	6%
Norman	2.0%	6.9%	6%	6%
Olmsted	1.4%	6.9%	4%	6%
Otter Tail	2.2%	6.9%	6%	6%
Pennington	2.0%	6.9%	6%	6%
Pine	2.2%	6.9%	3%	6%
Pipestone	0.8%	6.9%	4%	6%
Polk	1.2%	6.9%	6%	6%
Pope	2.2%	6.9%	6%	6%
Ramsey	2.9%	6.9%	32%	6%
Red Lake	2.0%	6.9%	6%	6%
Redwood	0.8%	6.9%	4%	6%
Renville	2.2%	6.9%	3%	6%
Rice	2.2%	6.9%	4%	6%
Rock	0.8%	6.9%	4%	6%
Roseau	2.0%	6.9%	6%	6%
Scott	2.9%	6.9%	22%	6%
Sherburne	0.5%	6.9%	3%	6%
Sibley	2.2%	6.9%	4%	6%
St. Louis	1.0%	6.9%	5%	6%
Stearns	0.5%	6.9%	3%	6%
Steele	0.9%	6.9%	4%	6%
Stevens	2.2%	6.9%	6%	6%
Swift	2.2%	6.9%	4%	6%
Todd	2.2%	6.9%	6%	6%
Traverse	2.2%	6.9%	6%	6%
Wabasha	0.9%	6.9%	4%	6%
Wadena	2.2%	6.9%	6%	6%
Waseca	2.2%	6.9%	4%	6%
Washington	2.9%	6.9%	22%	6%
Watonwan	2.2%	6.9%	4%	6%
Wilkin	0.7%	6.9%	6%	6%
Winona	0.6%	6.9%	4%	6%
Wright	2.9%	6.9%	3%	6%
Yellow Medicine	2.2%	6.9%	4%	6%

Minnesota Department of Transportation
Office of Civil Rights
Contractor Employment Data

1. Contractor Name and Address:

Phone: _____

2. Employment Data a) Name: Last Name, First Name, MI	**b) Social Security #**	c) New Hire (Y or N)	d) Ethnicity	e) Gender (M or F)	f) Trade/Foreman, Supervisors, Managers	g) Level (A, J, or T)
1.						
2.						
3.						
4.						
5.						
6.						
7.						
8.						
9.						
10.						
11.						
12.						
13.						
14.						
15.						
16.						
17.						
18.						
19.						
20.						
21.						
22.						
23.						
24.						
25.						
26.						
27.						

EEO-12 Rev. 5/09

INSTRUCTIONS FOR EEO-12
CONTRACTOR EMPLOYMENT DATA

This form should be submitted at the Pre-Con to the Project Engineer prior to the start of your first MnDOT construction project for the calendar year (Prime and Subs)

1. Contractor Name and Address self-explanatory.

2. Employment Data information will coincide with your employment records.

   2a. Name should be listed First Name, Middle Initial, and Last Name. This will enable MnDOT EEO staff to readily identify individuals on all projects.

   2b. Social Security Number self-explanatory.

   2c. New Hire is to be indicated with a "Y" for Yes or an "N" for No. "New Hire" is an employee who has not worked for you in any capacity or on any other project within the current calendar year.

   2d. Ethnicity can be indicated by Black (B), Hispanic (H), American Indian/Alaskan Native (AI), Asian/Pacific Islander (AP), or White (W).

   2e. Gender is to be indicated with an "M" for Males or an "F" for Females.

   2f. Trade/Foreman, Supervisors, Managers self-explanatory. List trade that applies unless the employee fits one of the other three categories.

   2g. Level "A" is for an Apprentice, "J" is for a Journey Worker, and "T" is for a MnDOT approved Trainee.

If you have questions about filling out this form, contact the Office of Civil Rights at (651) 366-3073.
(Please make copies as you need them.)

This information can be submitted electronically via the web, through MnDOT's Work force Information Tracking Initiative (WITI) Program. To open a free account to gain access to WITI or to find out more about this possibility please contact MnDOT's Office of Civil Rights at (651) 366-3015.

EEO-12 Rev. 05/09

Minnesota Department of Transportation **Office of Civil Rights** **Monthly Employment Compliance Report** **EEO-13**	**1. SP** ☐ **SAP** ☐	**3. Contractor Name:**	**4. Prime** ☐ **Subcontractor** ☐
	(Check one) **SP#**	**Federal Tax ID:**	(check one)
	County or City	Street Address:	5. Dollar Amount of Contract:
	2. Reporting Period to _____	City, State Zip	6. Percent of Completion:

7. Employment Data **a) Name: Last, First Middle Initial**		**b)** **Social Security #**	**c)** **New Hire** **(Y or N)**	**d)** **Ethnicity**	**e) Gender** **M or F)**	**Trade/Foreman, Supervisors, Managers**	**g)** **Level** **(A, J or T)**	**h) Hours Worked This Period**
1.								
2.								
3.								
4.								
5.								
6.								
7.								
8.								
9.								
10.								
11.								
12.								
13.								
14.								
15.								
16.								
17.								
18.								
19.								
20.								

8. Contract Goals	**9. Prepared by:** (Signature)	**10. Reviewed by:** (Signature)
MINNESOTA GOALS **%OBTAINED** _____ **%** Minority _____ %	Print Name:	Print Name:
_____ **%** Women _____ %	Title:	Title:
	Date:	Date:
	Phone: Fax:	Phone: Fax:

EEO-13 Rev. 05/09

INSTRUCTIONS FOR EEO-13

MONTHLY EMPLOYMENT COMPLIANCE REPORT

1.-5. Self-explanatory – **S**tate **P**roject #, county project is located in, are you a prime or sub, and contract value.

6. Percent of Completion is the estimated percentage of work completed including this reporting period.

7. Employment Data information will coincide with your employment records. All professional, supervisory and managerial hours actually worked on the project site must be included, whether or not they appear on the certified payroll.

   7a. Name should be listed Last Name, First Name, and Middle Initial. This will enable MnDOT EEO staff to readily identify individuals on all projects.
   7b. Social Security Number self-explanatory.
   7c. New Hire is to be indicated with a "Y" for Yes or an "N" for No. "New Hire" is an employee who has not worked for you in any capacity or on any other project within the current calendar year.
   7d. Ethnicity can be indicated by Black (B), Hispanic (H), American Indian/Alaskan Native (AI), Asian/Pacific Islander (AP), or White (W).
   7e. Gender is to be indicated with an "M" for Males or an "F" for Females.
   7f. Trade/Foreman, Supervisors, Managers list the trade that applies unless the employee fits one of the other three categories.
   7g. Level "A" is for an Apprentice, "J" is for a Journey Worker, and "T" is for a MnDOT approved Trainee.
   7h. Hours Worked for This Period will be all hours worked by the individual, for each trade, during the specified reporting period.

8. Contract Goals are the percent of total project hours to be worked by minority and women employees. The goals are determined by the geographic location and source of funding for the project. Projects in excess of $100,000 with any State funding must meet the State Employment Goals. Projects in excess of $10,000 with any Federal funding must meet the Federal Employment Goals. (See chart on EEO Pages 16-17.) Minority and women employee hours shall be distributed evenly throughout the length of the project and in every trade and craft that performs work on the project.

   % Obtained is the percent of the total project hours worked by minority and women employees, up to and including this reporting period.

9. Prepared by Contractor Designee is the signature of the prime or subcontractor's EEO officer/designee.

10. Reviewed by Project Engineer is the signature of the MnDOT staff monitoring the project.

The Prime Contractor will submit EEO-13 forms for its workforce and all subcontractors to the MnDOT Project Engineer by the 15th day of the month following the month when work was performed. If you have questions about filling out this form, contact the Office of Civil Rights at (651) 366-3073.
(Please make copies as you need them.)

This information can be submitted electronically via the web, through MnDOT's Workforce Information Tracking Initiative (WITI) Program. To open a free account to gain access to WITI or to find out more about this possibility please contact MnDOT's Office of Civil Rights at (651) 366-3321.

EEO-13 Rev. 05/09

EEO COMPLIANCE REVIEW REPORT

Total Company Workforce

(For 12 Month Period Preceding July 30th of the previous year)

Name and Address of Contractor

_____

_____

_____

Name and Title of Corporate Officer _____

Name of EEO Officer _____

Job Categories	Total Employees		Total Minorities		Blacks		Asian/ Pacific Is.		American Indian		Hispanic		On-the-Job Trainees	
	M	F	M	F	M	F	M	F	M	F	M	F	M	F
Officials (Managers)														
Supervisors														
Foremen/Women														
Clerical														
Equipment Operators														
Mechanics														
Truck Drivers														
Iron Workers														
Carpenters														
Cement Masons														
Electricians														
Pipefitters & Plumbers														
Painters														
Laborers														
Misc. Trades														
Total														
On-the-Job Trainees														

EEO-8 Rev. 07/07

MINNESOTA DEPARTMENT OF TRANSPORTATION

ON-THE-JOB TRAINING PROGRAM
TRAINEE ASSIGNMENT

SP #: _____ Location: _____ District: _____

Project Engineer: _____ Phone: ( ) _____

Prime Contractor: _____ Phone: ( ) _____

Address: _____

City: _____ State: _____ Zip:_____

EEO Officer: _____ Project Manager: _____

Tel:_____

Training Contractor:_____ Phone: ( ) _____

Address: _____

City: _____ State: _____ Zip:_____

EEO Officer: _____Project Manager: _____

Tel: _____

TRAINEE

Job Title or
Trade Classification: _____ Number of Training
Hours on this Project: _____

Name: _____ S.S.#: _____

Address: _____ Phone: ( ) _____

City: _____State: _____ Zip: _____

EEO Officer: _____Project Manager: _____

Tel: _____

Approximate Start Date: _____

Approximate Completion Date: _____

Is the trainee a member of a certified apprenticeship program?

If YES, verify with Apprenticeship Form or Indenture Number: _____

1. Ethnic Background: **Hispanic** _____; **Black** _____; **Asian/Pacific Islander** _____; **White**_____;

   Am. Ind/Alaskan _____ (Verify with Tribal I.D. # or Affiliation _____).

2. **Male**; _____ **Female**; _____.

EEO-5 Rev. 05/09

MINNESOTA DEPARTMENT OF TRANSPORTATION
OFFICE OF CIVIL RIGHTS

CERTIFICATION OF ON-THE-JOB TRAINING HOURS
FEDERAL-AID-PROJECTS

Contractor: *submit original and one copy monthly to the project engineer*

CONTRACTOR	REPORTING PERIOD:
ADDRESS	S.P. NO. (LOW):
	F.P. NO.:

TRAINEE	HOURS WORKED PREVIOUSLY	HOURS WORKED THIS PERIOD	TOTAL HOURS TO DATE

AMOUNT OF CLAIM _____ HOURS @ _____ PER HOUR = $ _____

Progress of Trainee(s) ☐Excellent ☐Very Good ☐Good ☐Below Good

COMMENTS (Please detail any supplementary training offered):

_____
_____
_____
_____
_____

CONTRACTOR:

The undersigned contractor hereby certifies that the listed employees are bonafide trainees as required by the On-the-Job Training Special Provision and that they have worked the hours as reported above.

_____

Contractor Signature/Title *Date*

PROJECT ENGINEER:

I hereby certify that the On-the-Job training hours reported above have been reviewed and found correct.

_____

Engineer Signature/Title *Date*

On-the-Job Training (OJT) Program Approval Form

The Special Provisions of the contract clearly indicate that training and upgrading of minorities and women toward Journey worker status is the primary objective of the training provisions.

We,		, submit the following training program for (Trade) for approval.
	(Name of Contractor)	

I. Project Information

Contractor Name	S.P. #	County	Prime	Sub
Address	City	State	Zip	
Contact Person/ EEO Officer		Phone #	e-mail address	
Project Goals				
Trainees	Hours			

II. Project Training Plan Information

Trade	# of Trainees Projected	Hourly Assignment per Trainee	Estimated Start Date	Estimated End Date	Recruiting Resource

Planned Training Activities

III. Contractor Acknowledgment Statement.
I understand and will comply fully with the plans and specifications under which this training is being performed, and will report subsequent revisions to the training program as changes occur.

Contractor's Representative Signature	Title	Date

IV. Instruction for the Contractor.

The contractor's proposed training programs must be documented on this form and submitted as indicated in the Proposal. Your Company's compliance with this specification will factor into any and all employment related "Good Faith Effort" determinations.

On-the-Job Training Program
Trainee Termination Form

Contractor Name		County	Prime	Sub
Address	City	State	Zip	
EEO Officer		Phone #	e-mail address	
Trainee Name		Phone #	Social Security No.	
Address	City	State	Zip	

Race/Ethnicity		
☐ Hispanic	☐ White	☐ Asian
☐ Black	☐ American Indian	☐ Other

Gender		Classification/Trade	S.P. #
☐ Female	☐ Male		

Start Date	Termination Date	Hours Assigned	Hrs Completed	

Reason for Termination/Separation/Layoff:

☐ Construction phase completed
☐ Death
☐ Fired (please explain below)
☐ Illness/health problems
☐ Lack of transportation and /or travel distance
☐ Military duty
☐ Relocated
☐ Personal
☐ Quit to work for another company
☐ Other (please explain below)

Please provide comments:

Contractor's Representative Signature Title Date

MAIL or Fax THE ORIGINAL and MAINTAIN COPY:
395 John Ireland Boulevard
St. Paul, MN 55155-1899
Office of Civil Rights M.S. 170
On-The –Job Training Coordinator
Fax # 651/366-3129

REQUIRED CONTRACT PROVISIONS
FEDERAL-AID CONSTRUCTION CONTRACTS
Form-1273
(52 FR 36920, October 2, 1987, revised October 21, 1993, FHWA Electronic Version May 1, 2012)

I. General
II. Nondiscrimination
III. Nonsegregated Facilities
IV. Davis-Bacon and Related Act Provisions
V. Contract Work Hours and Safety Standards Act Provisions
VI. Subletting or Assigning the Contract
VII. Safety: Accident Prevention
VIII. False Statements Concerning Highway Projects
IX. Implementation of Clean Air Act and Federal Water Pollution Control Act
X. Compliance with Governmentwide Suspension and Debarment Requirements
XI. Certification Regarding Use of Contract Funds for Lobbying

ATTACHMENTS

A. Employment and Materials Preference for Appalachian Development Highway System or Appalachian Local Access Road Contracts (included in Appalachian contracts only)

I. GENERAL

1. Form FHWA-1273 must be physically incorporated in each construction contract funded under Title 23 (excluding emergency contracts solely intended for debris removal). The contractor (or subcontractor) must insert this form in each subcontract and further require its inclusion in all lower tier subcontracts (excluding purchase orders, rental agreements and other agreements for supplies or services).

The applicable requirements of Form FHWA-1273 are incorporated by reference for work done under any purchase order, rental agreement or agreement for other services. The prime contractor shall be responsible for compliance by any subcontractor, lower-tier subcontractor or service provider.

Form FHWA-1273 must be included in all Federal-aid design-build contracts, in all subcontracts and in lower tier subcontracts (excluding subcontracts for design services, purchase orders, rental agreements and other agreements for supplies or services). The design-builder shall be responsible for compliance by any subcontractor, lower-tier subcontractor or service provider.

Contracting agencies may reference Form FHWA-1273 in bid proposal or request for proposal documents, however, the Form FHWA-1273 must be physically incorporated (not referenced) in all contracts, subcontracts and lower-tier subcontracts (excluding purchase orders, rental agreements and other agreements for supplies or services related to a construction contract).

2. Subject to the applicability criteria noted in the following sections, these contract provisions shall apply to all work performed on the contract by the contractor's own organization and with the assistance of workers under the contractor's immediate superintendence and to all work performed on the contract by piecework, station work, or by subcontract.

3. A breach of any of the stipulations contained in these Required Contract Provisions may be sufficient grounds for withholding of progress payments, withholding of final payment, termination of the contract, suspension / debarment or any other action determined to be appropriate by the contracting agency and FHWA.

4. Selection of Labor: During the performance of this contract, the contractor shall not use convict labor for any purpose within the limits of a construction project on a Federal-aid highway unless it is labor performed by convicts who are on parole, supervised release, or probation. The term Federal-aid highway does not include roadways functionally classified as local roads or rural minor collectors.

II. NONDISCRIMINATION

The provisions of this section related to 23 CFR Part 230 are applicable to all Federal-aid construction contracts and to all related construction subcontracts of $10,000 or more. The provisions of 23 CFR Part 230 are not applicable to material supply, engineering, or architectural service contracts.

In addition, the contractor and all subcontractors must comply with the following policies: Executive Order 11246, 41 CFR 60, 29 CFR 1625-1627, Title 23 USC Section 140, the Rehabilitation Act of 1973, as amended (29 USC 794), Title VI of the Civil Rights Act of 1964, as amended, and related regulations including 49 CFR Parts 21, 26 and 27; and 23 CFR Parts 200, 230, and 633.

The contractor and all subcontractors must comply with: the requirements of the Equal Opportunity Clause in 41 CFR 60-1.4(b) and, for all construction contracts exceeding $10,000, the Standard Federal Equal Employment Opportunity Construction Contract Specifications in 41 CFR 60-4.3.

Note: The U.S. Department of Labor has exclusive authority to determine compliance with Executive Order 11246 and the policies of the Secretary of Labor including 41 CFR 60, and 29 CFR 1625-1627. The contracting agency and the FHWA have the authority and the responsibility to ensure compliance with Title 23 USC Section 140, the Rehabilitation Act of 1973, as amended (29 USC 794), and Title VI of the Civil Rights Act of 1964, as amended, and related regulations including 49 CFR Parts 21, 26 and 27; and 23 CFR Parts 200, 230, and 633.

REQUIRED CONTRACT PROVISIONS (cont.)

The following provision is adopted from 23 CFR 230, Appendix A, with appropriate revisions to conform to the U.S. Department of Labor (US DOL) and FHWA requirements.

1. Equal Employment Opportunity: Equal employment opportunity (EEO) requirements not to discriminate and to take affirmative action to assure equal opportunity as set forth under laws, executive orders, rules, regulations (28 CFR 35, 29 CFR 1630, 29 CFR 1625-1627, 41 CFR 60 and 49 CFR 27) and orders of the Secretary of Labor as modified by the provisions prescribed herein, and imposed pursuant to 23 U.S.C. 140 shall constitute the EEO and specific affirmative action standards for the contractor's project activities under this contract. The provisions of the Americans with Disabilities Act of 1990 (42 U.S.C. 12101 et seq.) set forth under 28 CFR 35 and 29 CFR 1630 are incorporated by reference in this contract. In the execution of this contract, the contractor agrees to comply with the following minimum specific requirement activities of EEO:

a. The contractor will work with the contracting agency and the Federal Government to ensure that it has made every good faith effort to provide equal opportunity with respect to all of its terms and conditions of employment and in their review of activities under the contract.

b. The contractor will accept as its operating policy the following statement:

"It is the policy of this Company to assure that applicants are employed, and that employees are treated during employment, without regard to their race, religion, sex, color, national origin, age or disability. Such action shall include: employment, upgrading, demotion, or transfer; recruitment or recruitment advertising; layoff or termination; rates of pay or other forms of compensation; and selection for training, including apprenticeship, pre-apprenticeship, and/or on-the-job training."

2. EEO Officer: The contractor will designate and make known to the contracting officers an EEO Officer who will have the responsibility for and must be capable of effectively administering and promoting an active EEO program and who must be assigned adequate authority and responsibility to do so.

3. Dissemination of Policy: All members of the contractor's staff who are authorized to hire, supervise, promote, and discharge employees, or who recommend such action, or who are substantially involved in such action, will be made fully cognizant of, and will implement, the contractor's EEO policy and contractual responsibilities to provide EEO in each grade and classification of employment. To ensure that the above agreement will be met, the following actions will be taken as a minimum:

a. Periodic meetings of supervisory and personnel office employees will be conducted before the start of work and then not less often than once every six months, at which time the contractor's EEO policy and its implementation will be reviewed and explained. The meetings will be conducted by the EEO Officer.

b. All new supervisory or personnel office employees will be given a thorough indoctrination by the EEO Officer, covering all major aspects of the contractor's EEO obligations within thirty days following their reporting for duty with the contractor.

c. All personnel who are engaged in direct recruitment for the project will be instructed by the EEO Officer in the contractor's procedures for locating and hiring minorities and women.

d. Notices and posters setting forth the contractor's EEO policy will be placed in areas readily accessible to employees, applicants for employment and potential employees.

e. The contractor's EEO policy and the procedures to implement such policy will be brought to the attention of employees by means of meetings, employee handbooks, or other appropriate means.

4. Recruitment: When advertising for employees, the contractor will include in all advertisements for employees the notation: "An Equal Opportunity Employer." All such advertisements will be placed in publications having a large circulation among minorities and women in the area from which the project work force would normally be derived.

a. The contractor will, unless precluded by a valid bargaining agreement, conduct systematic and direct recruitment through public and private employee referral sources likely to yield qualified minorities and women. To meet this requirement, the contractor will identify sources of potential minority group employees, and establish with such identified sources procedures whereby minority and women applicants may be referred to the contractor for employment consideration.

b. In the event the contractor has a valid bargaining agreement providing for exclusive hiring hall referrals, the contractor is expected to observe the provisions of that agreement to the extent that the system meets the contractor's compliance with EEO contract provisions. Where implementation of such an agreement has the effect of discriminating against minorities or women, or obligates the contractor to do the same, such implementation violates Federal nondiscrimination provisions.

c. The contractor will encourage its present employees to refer minorities and women as applicants for employment. Information and procedures with regard to referring such applicants will be discussed with employees.

5. Personnel Actions: Wages, working conditions, and employee benefits shall be established and administered, and personnel actions of every type, including hiring, upgrading, promotion, transfer, demotion, layoff, and termination, shall be taken without regard to race, color, religion, sex, national origin, age or disability. The following procedures shall be followed:

a. The contractor will conduct periodic inspections of project sites to insure that working conditions and employee facilities do not indicate discriminatory treatment of project site personnel.

REQUIRED CONTRACT PROVISIONS (cont.)

b. The contractor will periodically evaluate the spread of wages paid within each classification to determine any evidence of discriminatory wage practices.

c. The contractor will periodically review selected personnel actions in depth to determine whether there is evidence of discrimination. Where evidence is found, the contractor will promptly take corrective action. If the review indicates that the discrimination may extend beyond the actions reviewed, such corrective action shall include all affected persons.

d. The contractor will promptly investigate all complaints of alleged discrimination made to the contractor in connection with its obligations under this contract, will attempt to resolve such complaints, and will take appropriate corrective action within a reasonable time. If the investigation indicates that the discrimination may affect persons other than the complainant, such corrective action shall include such other persons. Upon completion of each investigation, the contractor will inform every complainant of all of their avenues of appeal.

6. Training and Promotion:

a. The contractor will assist in locating, qualifying, and increasing the skills of minorities and women who are applicants for employment or current employees. Such efforts should be aimed at developing full journey level status employees in the type of trade or job classification involved.

b. Consistent with the contractor's work force requirements and as permissible under Federal and State regulations, the contractor shall make full use of training programs, i.e., apprenticeship, and on-the-job training programs for the geographical area of contract performance. In the event a special provision for training is provided under this contract, this subparagraph will be superseded as indicated in the special provision. The contracting agency may reserve training positions for persons who receive welfare assistance in accordance with 23 U.S.C. 140(a).

c. The contractor will advise employees and applicants for employment of available training programs and entrance requirements for each.

d. The contractor will periodically review the training and promotion potential of employees who are minorities and women and will encourage eligible employees to apply for such training and promotion.

7. Unions: If the contractor relies in whole or in part upon unions as a source of employees, the contractor will use good faith efforts to obtain the cooperation of such unions to increase opportunities for minorities and women. Actions by the contractor, either directly or through a contractor's association acting as agent, will include the procedures set forth below:

a. The contractor will use good faith efforts to develop, in cooperation with the unions, joint training programs aimed toward qualifying more minorities and women for membership in the unions and increasing the skills of minorities and women so that they may qualify for higher paying employment.

b. The contractor will use good faith efforts to incorporate an EEO clause into each union agreement to the end that such union will be contractually bound to refer applicants without regard to their race, color, religion, sex, national origin, age or disability.

c. The contractor is to obtain information as to the referral practices and policies of the labor union except that to the extent such information is within the exclusive possession of the labor union and such labor union refuses to furnish such information to the contractor, the contractor shall so certify to the contracting agency and shall set forth what efforts have been made to obtain such information.

d. In the event the union is unable to provide the contractor with a reasonable flow of referrals within the time limit set forth in the collective bargaining agreement, the contractor will, through independent recruitment efforts, fill the employment vacancies without regard to race, color, religion, sex, national origin, age or disability; making full efforts to obtain qualified and/or qualifiable minorities and women. The failure of a union to provide sufficient referrals (even though it is obligated to provide exclusive referrals under the terms of a collective bargaining agreement) does not relieve the contractor from the requirements of this paragraph. In the event the union referral practice prevents the contractor from meeting the obligations pursuant to Executive Order 11246, as amended, and these special provisions, such contractor shall immediately notify the contracting agency.

8. Reasonable Accommodation for Applicants / Employees with Disabilities: The contractor must be familiar with the requirements for and comply with the Americans with Disabilities Act and all rules and regulations established there under. Employers must provide reasonable accommodation in all employment activities unless to do so would cause an undue hardship.

9. Selection of Subcontractors, Procurement of Materials and Leasing of Equipment: The contractor shall not discriminate on the grounds of race, color, religion, sex, national origin, age or disability in the selection and retention of subcontractors, including procurement of materials and leases of equipment. The contractor shall take all necessary and reasonable steps to ensure nondiscrimination in the administration of this contract.

a. The contractor shall notify all potential subcontractors and suppliers and lessors of their EEO obligations under this contract.

b. The contractor will use good faith efforts to ensure subcontractor compliance with their EEO obligations.

10. Assurance Required by 49 CFR 26.13(b):

a. The requirements of 49 CFR Part 26 and the State DOT's U.S. DOT-approved DBE program are incorporated by reference.

REQUIRED CONTRACT PROVISIONS (cont.)

b. The contractor or subcontractor shall not discriminate on the basis of race, color, national origin, or sex in the performance of this contract. The contractor shall carry out applicable requirements of 49 CFR Part 26 in the award and administration of DOT-assisted contracts. Failure by the contractor to carry out these requirements is a material breach of this contract, which may result in the termination of this contract or such other remedy as the contracting agency deems appropriate.

11. Records and Reports: The contractor shall keep such records as necessary to document compliance with the EEO requirements. Such records shall be retained for a period of three years following the date of the final payment to the contractor for all contract work and shall be available at reasonable times and places for inspection by authorized representatives of the contracting agency and the FHWA.

a. The records kept by the contractor shall document the following:

(1) The number and work hours of minority and non-minority group members and women employed in each work classification on the project;
(2) The progress and efforts being made in cooperation with unions, when applicable, to increase employment opportunities for minorities and women; and
(3) The progress and efforts being made in locating, hiring, training, qualifying, and upgrading minorities and women;

b. The contractors and subcontractors will submit an annual report to the contracting agency each July for the duration of the project, indicating the number of minority, women, and non-minority group employees currently engaged in each work classification required by the contract work. This information is to be reported on Form FHWA-1391. The staffing data should represent the project work force on board in all or any part of the last payroll period preceding the end of July. If on-the-job training is being required by special provision, the contractor will be required to collect and report training data. The employment data should reflect the work force on board during all or any part of the last payroll period preceding the end of July.

III. NONSEGREGATED FACILITIES

This provision is applicable to all Federal-aid construction contracts and to all related construction subcontracts of $10,000 or more.

The contractor must ensure that facilities provided for employees are provided in such a manner that segregation on the basis of race, color, religion, sex, or national origin cannot result. The contractor may neither require such segregated use by written or oral policies nor tolerate such use by employee custom. The contractor's obligation extends further to ensure that its employees are not assigned to perform their services at any location, under the contractor's control, where the facilities are segregated. The term "facilities" includes waiting rooms, work areas, restaurants and other eating areas, time clocks, restrooms, washrooms, locker rooms, and other storage or dressing areas, parking lots, drinking fountains, recreation or entertainment areas, transportation, and housing provided for employees. The contractor shall provide separate or single-user restrooms and necessary dressing or sleeping areas to assure privacy between sexes.

IV. DAVIS-BACON AND RELATED ACT PROVISIONS

This section is applicable to all Federal-aid construction projects exceeding $2,000 and to all related subcontracts and lower-tier subcontracts (regardless of subcontract size). The requirements apply to all projects located within the right-of-way of a roadway that is functionally classified as Federal-aid highway. This excludes roadways functionally classified as local roads or rural minor collectors, which are exempt. Contracting agencies may elect to apply these requirements to other projects.

The following provisions are from the U.S. Department of Labor regulations in 29 CFR 5.5 “Contract provisions and related matters” with minor revisions to conform to the FHWA-1273 format and FHWA program requirements.

1. Minimum wages

a. All laborers and mechanics employed or working upon the site of the work, will be paid unconditionally and not less often than once a week, and without subsequent deduction or rebate on any account (except such payroll deductions as are permitted by regulations issued by the Secretary of Labor under the Copeland Act (29 CFR part 3)), the full amount of wages and bona fide fringe benefits (or cash equivalents thereof) due at time of payment computed at rates not less than those contained in the wage determination of the Secretary of Labor which is attached hereto and made a part hereof, regardless of any contractual relationship which may be alleged to exist between the contractor and such laborers and mechanics.

Contributions made or costs reasonably anticipated for bona fide fringe benefits under section 1(b)(2) of the Davis-Bacon Act on behalf of laborers or mechanics are considered wages paid to such laborers or mechanics, subject to the provisions of paragraph 1.d. of this section; also, regular contributions made or costs incurred for more than a weekly period (but not less often than quarterly) under plans, funds, or programs which cover the particular weekly period, are deemed to be constructively made or incurred during such weekly period. Such laborers and mechanics shall be paid the appropriate wage rate and fringe benefits on the wage determination for the classification of work actually performed, without regard to skill, except as provided in 29 CFR 5.5(a)(4). Laborers or mechanics performing work in more than one classification may be compensated at the rate specified for each classification for the time actually worked therein: Provided, That the employer's payroll records accurately set forth the time spent in each classification in which work is performed. The wage determination (including any additional classification and wage rates conformed under paragraph 1.b. of

REQUIRED CONTRACT PROVISIONS (cont.)

this section) and the Davis-Bacon poster (WH–1321) shall be posted at all times by the contractor and its subcontractors at the site of the work in a prominent and accessible place where it can be easily seen by the workers.

b. (1) The contracting officer shall require that any class of laborers or mechanics, including helpers, which is not listed in the wage determination and which is to be employed under the contract shall be classified in conformance with the wage determination. The contracting officer shall approve an additional classification and wage rate and fringe benefits therefore only when the following criteria have been met:

(i) The work to be performed by the classification requested is not performed by a classification in the wage determination; and

(ii) The classification is utilized in the area by the construction industry; and

(iii) The proposed wage rate, including any bona fide fringe benefits, bears a reasonable relationship to the wage rates contained in the wage determination.

(2) If the contractor and the laborers and mechanics to be employed in the classification (if known), or their representatives, and the contracting officer agree on the classification and wage rate (including the amount designated for fringe benefits where appropriate), a report of the action taken shall be sent by the contracting officer to the Administrator of the Wage and Hour Division, Employment Standards Administration, U.S. Department of Labor, Washington, DC 20210. The Administrator, or an authorized representative, will approve, modify, or disapprove every additional classification action within 30 days of receipt and so advise the contracting officer or will notify the contracting officer within the 30-day period that additional time is necessary.

(3) In the event the contractor, the laborers or mechanics to be employed in the classification or their representatives, and the contracting officer do not agree on the proposed classification and wage rate (including the amount designated for fringe benefits, where appropriate), the contracting officer shall refer the questions, including the views of all interested parties and the recommendation of the contracting officer, to the Wage and Hour Administrator for determination. The Wage and Hour Administrator, or an authorized representative, will issue a determination within 30 days of receipt and so advise the contracting officer or will notify the contracting officer within the 30-day period that additional time is necessary.

(4) The wage rate (including fringe benefits where appropriate) determined pursuant to paragraphs 1.b.(2) or 1.b.(3) of this section, shall be paid to all workers performing work in the classification under this contract from the first day on which work is performed in the classification.

c. Whenever the minimum wage rate prescribed in the contract for a class of laborers or mechanics includes a fringe benefit which is not expressed as an hourly rate, the contractor shall either pay the benefit as stated in the wage determination or shall pay another bona fide fringe benefit or an hourly cash equivalent thereof.

d. If the contractor does not make payments to a trustee or other third person, the contractor may consider as part of the wages of any laborer or mechanic the amount of any costs reasonably anticipated in providing bona fide fringe benefits under a plan or program, Provided, That the Secretary of Labor has found, upon the written request of the contractor, that the applicable standards of the Davis-Bacon Act have been met. The Secretary of Labor may require the contractor to set aside in a separate account assets for the meeting of obligations under the plan or program.

2. Withholding

The contracting agency shall upon its own action or upon written request of an authorized representative of the Department of Labor, withhold or cause to be withheld from the contractor under this contract, or any other Federal contract with the same prime contractor, or any other federally-assisted contract subject to Davis-Bacon prevailing wage requirements, which is held by the same prime contractor, so much of the accrued payments or advances as may be considered necessary to pay laborers and mechanics, including apprentices, trainees, and helpers, employed by the contractor or any subcontractor the full amount of wages required by the contract. In the event of failure to pay any laborer or mechanic, including any apprentice, trainee, or helper, employed or working on the site of the work, all or part of the wages required by the contract, the contracting agency may, after written notice to the contractor, take such action as may be necessary to cause the suspension of any further payment, advance, or guarantee of funds until such violations have ceased.

3. Payrolls and basic records

a. Payrolls and basic records relating thereto shall be maintained by the contractor during the course of the work and preserved for a period of three years thereafter for all laborers and mechanics working at the site of the work. Such records shall contain the name, address, and social security number of each such worker, his or her correct classification, hourly rates of wages paid (including rates of contributions or costs anticipated for bona fide fringe benefits or cash equivalents thereof of the types described in section 1(b)(2)(B) of the Davis-Bacon Act), daily and weekly number of hours worked, deductions made and actual wages paid. Whenever the Secretary of Labor has found under 29 CFR 5.5(a)(1)(iv) that the wages of any laborer or mechanic include the amount of any costs reasonably anticipated in providing benefits under a plan or program described in section 1(b)(2)(B) of the Davis-Bacon Act, the contractor shall maintain records which show that the commitment to provide such benefits is enforceable, that the plan or program is financially responsible, and that the plan or program has been communicated in writing to the laborers or mechanics affected, and records which show the costs anticipated or the actual cost incurred in providing such benefits. Contractors employing apprentices or trainees under approved programs shall maintain

REQUIRED CONTRACT PROVISIONS (cont.)

written evidence of the registration of apprenticeship programs and certification of trainee programs, the registration of the apprentices and trainees, and the ratios and wage rates prescribed in the applicable programs.

b. (1) The contractor shall submit weekly for each week in which any contract work is performed a copy of all payrolls to the contracting agency. The payrolls submitted shall set out accurately and completely all of the information required to be maintained under 29 CFR 5.5(a)(3)(i), except that full social security numbers and home addresses shall not be included on weekly transmittals. Instead the payrolls shall only need to include an individually identifying number for each employee (e.g. , the last four digits of the employee's social security number). The required weekly payroll information may be submitted in any form desired. Optional Form WH–347 is available for this purpose from the Wage and Hour Division Web site at http://www.dol.gov/esa/whd/forms/wh347instr.htm or its successor site. The prime contractor is responsible for the submission of copies of payrolls by all subcontractors. Contractors and subcontractors shall maintain the full social security number and current address of each covered worker, and shall provide them upon request to the contracting agency for transmission to the State DOT, the FHWA or the Wage and Hour Division of the Department of Labor for purposes of an investigation or audit of compliance with prevailing wage requirements. It is not a violation of this section for a prime contractor to require a subcontractor to provide addresses and social security numbers to the prime contractor for its own records, without weekly submission to the contracting agency..

(2) Each payroll submitted shall be accompanied by a "Statement of Compliance," signed by the contractor or subcontractor or his or her agent who pays or supervises the payment of the persons employed under the contract and shall certify the following:

(i) That the payroll for the payroll period contains the information required to be provided under §5.5 (a)(3)(ii) of Regulations, 29 CFR part 5, the appropriate information is being maintained under §5.5 (a)(3)(i) of Regulations, 29 CFR part 5, and that such information is correct and complete;

(ii) That each laborer or mechanic (including each helper, apprentice, and trainee) employed on the contract during the payroll period has been paid the full weekly wages earned, without rebate, either directly or indirectly, and that no deductions have been made either directly or indirectly from the full wages earned, other than permissible deductions as set forth in Regulations, 29 CFR part 3;

(iii) That each laborer or mechanic has been paid not less than the applicable wage rates and fringe benefits or cash equivalents for the classification of work performed, as specified in the applicable wage determination incorporated into the contract.

(3) The weekly submission of a properly executed certification set forth on the reverse side of Optional Form WH–347 shall satisfy the requirement for submission of the "Statement of Compliance" required by paragraph 3.b.(2) of this section.

(4) The falsification of any of the above certifications may subject the contractor or subcontractor to civil or criminal prosecution under section 1001 of title 18 and section 231 of title 31 of the United States Code.

c. The contractor or subcontractor shall make the records required under paragraph 3.a. of this section available for inspection, copying, or transcription by authorized representatives of the contracting agency, the State DOT, the FHWA, or the Department of Labor, and shall permit such representatives to interview employees during working hours on the job. If the contractor or subcontractor fails to submit the required records or to make them available, the FHWA may, after written notice to the contractor, the contracting agency or the State DOT, take such action as may be necessary to cause the suspension of any further payment, advance, or guarantee of funds. Furthermore, failure to submit the required records upon request or to make such records available may be grounds for debarment action pursuant to 29 CFR 5.12.

4. Apprentices and trainees

a. Apprentices (programs of the USDOL).

Apprentices will be permitted to work at less than the predetermined rate for the work they performed when they are employed pursuant to and individually registered in a bona fide apprenticeship program registered with the U.S. Department of Labor, Employment and Training Administration, Office of Apprenticeship Training, Employer and Labor Services, or with a State Apprenticeship Agency recognized by the Office, or if a person is employed in his or her first 90 days of probationary employment as an apprentice in such an apprenticeship program, who is not individually registered in the program, but who has been certified by the Office of Apprenticeship Training, Employer and Labor Services or a State Apprenticeship Agency (where appropriate) to be eligible for probationary employment as an apprentice.

The allowable ratio of apprentices to journeymen on the job site in any craft classification shall not be greater than the ratio permitted to the contractor as to the entire work force under the registered program. Any worker listed on a payroll at an apprentice wage rate, who is not registered or otherwise employed as stated above, shall be paid not less than the applicable wage rate on the wage determination for the classification of work actually performed. In addition, any apprentice performing work on the job site in excess of the ratio permitted under the registered program shall be paid not less than the applicable wage rate on the wage determination for the work actually performed. Where a contractor is performing construction on a project in a locality other than that in which its program is registered, the ratios and wage rates (expressed in percentages of the journeyman's hourly rate) specified in the contractor's or subcontractor's registered program shall be observed.

REQUIRED CONTRACT PROVISIONS (cont.)

Every apprentice must be paid at not less than the rate specified in the registered program for the apprentice's level of progress, expressed as a percentage of the journeymen hourly rate specified in the applicable wage determination. Apprentices shall be paid fringe benefits in accordance with the provisions of the apprenticeship program. If the apprenticeship program does not specify fringe benefits, apprentices must be paid the full amount of fringe benefits listed on the wage determination for the applicable classification. If the Administrator determines that a different practice prevails for the applicable apprentice classification, fringes shall be paid in accordance with that determination.

In the event the Office of Apprenticeship Training, Employer and Labor Services, or a State Apprenticeship Agency recognized by the Office, withdraws approval of an apprenticeship program, the contractor will no longer be permitted to utilize apprentices at less than the applicable predetermined rate for the work performed until an acceptable program is approved.

b. Trainees (programs of the USDOL).

Except as provided in 29 CFR 5.16, trainees will not be permitted to work at less than the predetermined rate for the work performed unless they are employed pursuant to and individually registered in a program which has received prior approval, evidenced by formal certification by the U.S. Department of Labor, Employment and Training Administration.

The ratio of trainees to journeymen on the job site shall not be greater than permitted under the plan approved by the Employment and Training Administration.

Every trainee must be paid at not less than the rate specified in the approved program for the trainee's level of progress, expressed as a percentage of the journeyman hourly rate specified in the applicable wage determination. Trainees shall be paid fringe benefits in accordance with the provisions of the trainee program. If the trainee program does not mention fringe benefits, trainees shall be paid the full amount of fringe benefits listed on the wage determination unless the Administrator of the Wage and Hour Division determines that there is an apprenticeship program associated with the corresponding journeyman wage rate on the wage determination which provides for less than full fringe benefits for apprentices. Any employee listed on the payroll at a trainee rate who is not registered and participating in a training plan approved by the Employment and Training Administration shall be paid not less than the applicable wage rate on the wage determination for the classification of work actually performed. In addition, any trainee performing work on the job site in excess of the ratio permitted under the registered program shall be paid not less than the applicable wage rate on the wage determination for the work actually performed.

In the event the Employment and Training Administration withdraws approval of a training program, the contractor will no longer be permitted to utilize trainees at less than the applicable predetermined rate for the work performed until an acceptable program is approved.

c. Equal employment opportunity. The utilization of apprentices, trainees and journeymen under this part shall be in conformity with the equal employment opportunity requirements of Executive Order 11246, as amended, and 29 CFR part 30.

d. Apprentices and Trainees (programs of the U.S. DOT).

Apprentices and trainees working under apprenticeship and skill training programs which have been certified by the Secretary of Transportation as promoting EEO in connection with Federal-aid highway construction programs are not subject to the requirements of paragraph 4 of this Section IV. The straight time hourly wage rates for apprentices and trainees under such programs will be established by the particular programs. The ratio of apprentices and trainees to journeymen shall not be greater than permitted by the terms of the particular program.

5. Compliance with Copeland Act requirements. The contractor shall comply with the requirements of 29 CFR part 3, which are incorporated by reference in this contract.

6. Subcontracts. The contractor or subcontractor shall insert Form FHWA-1273 in any subcontracts and also require the subcontractors to include Form FHWA-1273 in any lower tier subcontracts. The prime contractor shall be responsible for the compliance by any subcontractor or lower tier subcontractor with all the contract clauses in 29 CFR 5.5.

7. Contract termination: debarment. A breach of the contract clauses in 29 CFR 5.5 may be grounds for termination of the contract, and for debarment as a contractor and a subcontractor as provided in 29 CFR 5.12.

8. Compliance with Davis-Bacon and Related Act requirements. All rulings and interpretations of the Davis-Bacon and Related Acts contained in 29 CFR parts 1, 3, and 5 are herein incorporated by reference in this contract.

9. Disputes concerning labor standards. Disputes arising out of the labor standards provisions of this contract shall not be subject to the general disputes clause of this contract. Such disputes shall be resolved in accordance with the procedures of the Department of Labor set forth in 29 CFR parts 5, 6, and 7. Disputes within the meaning of this clause include disputes between the contractor (or any of its subcontractors) and the contracting agency, the U.S. Department of Labor, or the employees or their representatives.

10. Certification of eligibility.

a. By entering into this contract, the contractor certifies that neither it (nor he or she) nor any person or firm who has an interest in the contractor's firm is a person or firm ineligible to be awarded Government contracts by virtue of section 3(a) of the Davis-Bacon Act or 29 CFR 5.12(a)(1).

b. No part of this contract shall be subcontracted to any person or firm ineligible for award of a Government contract by virtue of section 3(a) of the Davis-Bacon Act or 29 CFR 5.12(a)(1).

REQUIRED CONTRACT PROVISIONS (cont.)

c. The penalty for making false statements is prescribed in the U.S. Criminal Code, 18 U.S.C. 1001.

V. CONTRACT WORK HOURS AND SAFETY STANDARDS ACT

The following clauses apply to any Federal-aid construction contract in an amount in excess of $100,000 and subject to the overtime provisions of the Contract Work Hours and Safety Standards Act. These clauses shall be inserted in addition to the clauses required by 29 CFR 5.5(a) or 29 CFR 4.6. As used in this paragraph, the terms laborers and mechanics include watchmen and guards.

1. Overtime requirements. No contractor or subcontractor contracting for any part of the contract work which may require or involve the employment of laborers or mechanics shall require or permit any such laborer or mechanic in any workweek in which he or she is employed on such work to work in excess of forty hours in such workweek unless such laborer or mechanic receives compensation at a rate not less than one and one-half times the basic rate of pay for all hours worked in excess of forty hours in such workweek.

2. Violation; liability for unpaid wages; liquidated damages. In the event of any violation of the clause set forth in paragraph (1.) of this section, the contractor and any subcontractor responsible therefor shall be liable for the unpaid wages. In addition, such contractor and subcontractor shall be liable to the United States (in the case of work done under contract for the District of Columbia or a territory, to such District or to such territory), for liquidated damages. Such liquidated damages shall be computed with respect to each individual laborer or mechanic, including watchmen and guards, employed in violation of the clause set forth in paragraph (1.) of this section, in the sum of $10 for each calendar day on which such individual was required or permitted to work in excess of the standard workweek of forty hours without payment of the overtime wages required by the clause set forth in paragraph (1.) of this section.

3. Withholding for unpaid wages and liquidated damages. The FHWA or the contacting agency shall upon its own action or upon written request of an authorized representative of the Department of Labor withhold or cause to be withheld, from any moneys payable on account of work performed by the contractor or subcontractor under any such contract or any other Federal contract with the same prime contractor, or any other federally-assisted contract subject to the Contract Work Hours and Safety Standards Act, which is held by the same prime contractor, such sums as may be determined to be necessary to satisfy any liabilities of such contractor or subcontractor for unpaid wages and liquidated damages as provided in the clause set forth in paragraph (2.) of this section.

4. Subcontracts. The contractor or subcontractor shall insert in any subcontracts the clauses set forth in paragraph (1.) through (4.) of this section and also a clause requiring the subcontractors to include these clauses in any lower tier subcontracts. The prime contractor shall be responsible for compliance by any subcontractor or lower tier subcontractor with the clauses set forth in paragraphs (1.) through (4.) of this section

VI. SUBLETTING OR ASSIGNING THE CONTRACT

This provision is applicable to all Federal-aid construction contracts on the National Highway System.

1. The contractor shall perform with its own organization contract work amounting to not less than 30 percent (or a greater percentage if specified elsewhere in the contract) of the total original contract price, excluding any specialty items designated by the contracting agency. Specialty items may be performed by subcontract and the amount of any such specialty items performed may be deducted from the total original contract price before computing the amount of work required to be performed by the contractor's own organization (23 CFR 635.116).

a. The term “perform work with its own organization” refers to workers employed or leased by the prime contractor, and equipment owned or rented by the prime contractor, with or without operators. Such term does not include employees or equipment of a subcontractor or lower tier subcontractor, agents of the prime contractor, or any other assignees. The term may include payments for the costs of hiring leased employees from an employee leasing firm meeting all relevant Federal and State regulatory requirements. Leased employees may only be included in this term if the prime contractor meets all of the following conditions:

(1) the prime contractor maintains control over the supervision of the day-to-day activities of the leased employees;
(2) the prime contractor remains responsible for the quality of the work of the leased employees;
(3) the prime contractor retains all power to accept or exclude individual employees from work on the project; and
(4) the prime contractor remains ultimately responsible for the payment of predetermined minimum wages, the submission of payrolls, statements of compliance and all other Federal regulatory requirements.

b. "Specialty Items" shall be construed to be limited to work that requires highly specialized knowledge, abilities, or equipment not ordinarily available in the type of contracting organizations qualified and expected to bid or propose on the contract as a whole and in general are to be limited to minor components of the overall contract.

2. The contract amount upon which the requirements set forth in paragraph (1) of Section VI is computed includes the cost of material and manufactured products which are to be purchased or produced by the contractor under the contract provisions.

3. The contractor shall furnish (a) a competent superintendent or supervisor who is employed by the firm, has full authority to direct performance of the work in accordance with the contract requirements, and is in charge of all construction operations (regardless of who performs the work) and (b) such other of its

REQUIRED CONTRACT PROVISIONS (cont.)

own organizational resources (supervision, management, and engineering services) as the contracting officer determines is necessary to assure the performance of the contract.

4. No portion of the contract shall be sublet, assigned or otherwise disposed of except with the written consent of the contracting officer, or authorized representative, and such consent when given shall not be construed to relieve the contractor of any responsibility for the fulfillment of the contract. Written consent will be given only after the contracting agency has assured that each subcontract is evidenced in writing and that it contains all pertinent provisions and requirements of the prime contract.

5. The 30% self-performance requirement of paragraph (1) is not applicable to design-build contracts; however, contracting agencies may establish their own self-performance requirements.

VII. SAFETY: ACCIDENT PREVENTION

This provision is applicable to all Federal-aid construction contracts and to all related subcontracts.

1. In the performance of this contract the contractor shall comply with all applicable Federal, State, and local laws governing safety, health, and sanitation (23 CFR 635). The contractor shall provide all safeguards, safety devices and protective equipment and take any other needed actions as it determines, or as the contracting officer may determine, to be reasonably necessary to protect the life and health of employees on the job and the safety of the public and to protect property in connection with the performance of the work covered by the contract.

2. It is a condition of this contract, and shall be made a condition of each subcontract, which the contractor enters into pursuant to this contract, that the contractor and any subcontractor shall not permit any employee, in performance of the contract, to work in surroundings or under conditions which are unsanitary, hazardous or dangerous to his/her health or safety, as determined under construction safety and health standards (29 CFR 1926) promulgated by the Secretary of Labor, in accordance with Section 107 of the Contract Work Hours and Safety Standards Act (40 U.S.C. 3704).

3. Pursuant to 29 CFR 1926.3, it is a condition of this contract that the Secretary of Labor or authorized representative thereof, shall have right of entry to any site of contract performance to inspect or investigate the matter of compliance with the construction safety and health standards and to carry out the duties of the Secretary under Section 107 of the Contract Work Hours and Safety Standards Act (40 U.S.C.3704).

VIII. FALSE STATEMENTS CONCERNING HIGHWAY PROJECTS

This provision is applicable to all Federal-aid construction contracts and to all related subcontracts.

In order to assure high quality and durable construction in conformity with approved plans and specifications and a high degree of reliability on statements and representations made by engineers, contractors, suppliers, and workers on Federal-aid highway projects, it is essential that all persons concerned with the project perform their functions as carefully, thoroughly, and honestly as possible. Willful falsification, distortion, or misrepresentation with respect to any facts related to the project is a violation of Federal law. To prevent any misunderstanding regarding the seriousness of these and similar acts, Form FHWA-1022 shall be posted on each Federal-aid highway project (23 CFR 635) in one or more places where it is readily available to all persons concerned with the project:

18 U.S.C. 1020 reads as follows:

"Whoever, being an officer, agent, or employee of the United States, or of any State or Territory, or whoever, whether a person, association, firm, or corporation, knowingly makes any false statement, false representation, or false report as to the character, quality, quantity, or cost of the material used or to be used, or the quantity or quality of the work performed or to be performed, or the cost thereof in connection with the submission of plans, maps, specifications, contracts, or costs of construction on any highway or related project submitted for approval to the Secretary of Transportation; or

Whoever knowingly makes any false statement, false representation, false report or false claim with respect to the character, quality, quantity, or cost of any work performed or to be performed, or materials furnished or to be furnished, in connection with the construction of any highway or related project approved by the Secretary of Transportation; or

Whoever knowingly makes any false statement or false representation as to material fact in any statement, certificate, or report submitted pursuant to provisions of the Federal-aid Roads Act approved July 1, 1916, (39 Stat. 355), as amended and supplemented;

Shall be fined under this title or imprisoned not more than 5 years or both."

IX. IMPLEMENTATION OF CLEAN AIR ACT AND FEDERAL WATER POLLUTION CONTROL ACT

This provision is applicable to all Federal-aid construction contracts and to all related subcontracts.

By submission of this bid/proposal or the execution of this contract, or subcontract, as appropriate, the bidder, proposer, Federal-aid construction contractor, or subcontractor, as appropriate, will be deemed to have stipulated as follows:

1. That any person who is or will be utilized in the performance of this contract is not prohibited from receiving an award due to a violation of Section 508 of the Clean Water Act or Section 306 of the Clean Air Act.

REQUIRED CONTRACT PROVISIONS (cont.)

2. That the contractor agrees to include or cause to be included the requirements of paragraph (1) of this Section X in every subcontract, and further agrees to take such action as the contracting agency may direct as a means of enforcing such requirements.

X. CERTIFICATION REGARDING DEBARMENT, SUSPENSION, INELIGIBILITY AND VOLUNTARY EXCLUSION

This provision is applicable to all Federal-aid construction contracts, design-build contracts, subcontracts, lower-tier subcontracts, purchase orders, lease agreements, consultant contracts or any other covered transaction requiring FHWA approval or that is estimated to cost $25,000 or more – as defined in 2 CFR Parts 180 and 1200.

1**. Instructions for Certification – First Tier Participants:**

a. By signing and submitting this proposal, the prospective first tier participant is providing the certification set out below.

b. The inability of a person to provide the certification set out below will not necessarily result in denial of participation in this covered transaction. The prospective first tier participant shall submit an explanation of why it cannot provide the certification set out below. The certification or explanation will be considered in connection with the department or agency's determination whether to enter into this transaction. However, failure of the prospective first tier participant to furnish a certification or an explanation shall disqualify such a person from participation in this transaction.

c. The certification in this clause is a material representation of fact upon which reliance was placed when the contracting agency determined to enter into this transaction. If it is later determined that the prospective participant knowingly rendered an erroneous certification, in addition to other remedies available to the Federal Government, the contracting agency may terminate this transaction for cause of default.

d. The prospective first tier participant shall provide immediate written notice to the contracting agency to whom this proposal is submitted if any time the prospective first tier participant learns that its certification was erroneous when submitted or has become erroneous by reason of changed circumstances.

e. The terms "covered transaction," "debarred," "suspended," "ineligible," "participant," "person," "principal," and "voluntarily excluded," as used in this clause, are defined in 2 CFR Parts 180 and 1200. “First Tier Covered Transactions” refers to any covered transaction between a grantee or subgrantee of Federal funds and a participant (such as the prime or general contract). “Lower Tier Covered Transactions” refers to any covered transaction under a First Tier Covered Transaction (such as subcontracts). “First Tier Participant” refers to the participant who has entered into a covered transaction with a grantee or subgrantee of Federal funds (such as the prime or general contractor). “Lower Tier Participant” refers any participant who has entered into a covered transaction with a First Tier Participant or other Lower Tier Participants (such as subcontractors and suppliers).

f. The prospective first tier participant agrees by submitting this proposal that, should the proposed covered transaction be entered into, it shall not knowingly enter into any lower tier covered transaction with a person who is debarred, suspended, declared ineligible, or voluntarily excluded from participation in this covered transaction, unless authorized by the department or agency entering into this transaction.

g. The prospective first tier participant further agrees by submitting this proposal that it will include the clause titled "Certification Regarding Debarment, Suspension, Ineligibility and Voluntary Exclusion-Lower Tier Covered Transactions," provided by the department or contracting agency, entering into this covered transaction, without modification, in all lower tier covered transactions and in all solicitations for lower tier covered transactions exceeding the $25,000 threshold.

h. A participant in a covered transaction may rely upon a certification of a prospective participant in a lower tier covered transaction that is not debarred, suspended, ineligible, or voluntarily excluded from the covered transaction, unless it knows that the certification is erroneous. A participant is responsible for ensuring that its principals are not suspended, debarred, or otherwise ineligible to participate in covered transactions. To verify the eligibility of its principals, as well as the eligibility of any lower tier prospective participants, each participant may, but is not required to, check the Excluded Parties List System website (https://www.epls.gov/), which is compiled by the General Services Administration.

i. Nothing contained in the foregoing shall be construed to require the establishment of a system of records in order to render in good faith the certification required by this clause. The knowledge and information of the prospective participant is not required to exceed that which is normally possessed by a prudent person in the ordinary course of business dealings.

j. Except for transactions authorized under paragraph (f) of these instructions, if a participant in a covered transaction knowingly enters into a lower tier covered transaction with a person who is suspended, debarred, ineligible, or voluntarily excluded from participation in this transaction, in addition to other remedies available to the Federal Government, the department or agency may terminate this transaction for cause or default.

* * * * *

2. Certification Regarding Debarment, Suspension, Ineligibility and Voluntary Exclusion – First Tier Participants:

a. The prospective first tier participant certifies to the best of its knowledge and belief, that it and its principals:

(1) Are not presently debarred, suspended, proposed for debarment, declared ineligible, or voluntarily excluded from participating in covered transactions by any Federal department or agency;

REQUIRED CONTRACT PROVISIONS (cont.)

(2) Have not within a three-year period preceding this proposal been convicted of or had a civil judgment rendered against them for commission of fraud or a criminal offense in connection with obtaining, attempting to obtain, or performing a public (Federal, State or local) transaction or contract under a public transaction; violation of Federal or State antitrust statutes or commission of embezzlement, theft, forgery, bribery, falsification or destruction of records, making false statements, or receiving stolen property;

(3) Are not presently indicted for or otherwise criminally or civilly charged by a governmental entity (Federal, State or local) with commission of any of the offenses enumerated in paragraph (a)(2) of this certification; and

(4) Have not within a three-year period preceding this application/proposal had one or more public transactions (Federal, State or local) terminated for cause or default.

b. Where the prospective participant is unable to certify to any of the statements in this certification, such prospective participant shall attach an explanation to this proposal.

2. **Instructions for Certification - Lower Tier Participants:**

(Applicable to all subcontracts, purchase orders and other lower tier transactions requiring prior FHWA approval or estimated to cost $25,000 or more - 2 CFR Parts 180 and 1200)

a. By signing and submitting this proposal, the prospective lower tier is providing the certification set out below.

b. The certification in this clause is a material representation of fact upon which reliance was placed when this transaction was entered into. If it is later determined that the prospective lower tier participant knowingly rendered an erroneous certification, in addition to other remedies available to the Federal Government, the department, or agency with which this transaction originated may pursue available remedies, including suspension and/or debarment.

c. The prospective lower tier participant shall provide immediate written notice to the person to which this proposal is submitted if at any time the prospective lower tier participant learns that its certification was erroneous by reason of changed circumstances.

d. The terms "covered transaction," "debarred," "suspended," "ineligible," "participant," "person," "principal," and "voluntarily excluded," as used in this clause, are defined in 2 CFR Parts 180 and 1200. You may contact the person to which this proposal is submitted for assistance in obtaining a copy of those regulations. "First Tier Covered Transactions" refers to any covered transaction between a grantee or subgrantee of Federal funds and a participant (such as the prime or general contract). "Lower Tier Covered Transactions" refers to any covered transaction under a First Tier Covered Transaction (such as subcontracts). "First Tier Participant" refers to the participant who has entered into a covered transaction with a grantee or subgrantee of Federal funds (such as the prime or general contractor). "Lower Tier Participant" refers any participant who has entered into a covered transaction with a First Tier Participant or other Lower Tier Participants (such as subcontractors and suppliers).

e. The prospective lower tier participant agrees by submitting this proposal that, should the proposed covered transaction be entered into, it shall not knowingly enter into any lower tier covered transaction with a person who is debarred, suspended, declared ineligible, or voluntarily excluded from participation in this covered transaction, unless authorized by the department or agency with which this transaction originated.

f. The prospective lower tier participant further agrees by submitting this proposal that it will include this clause titled "Certification Regarding Debarment, Suspension, Ineligibility and Voluntary Exclusion-Lower Tier Covered Transaction," without modification, in all lower tier covered transactions and in all solicitations for lower tier covered transactions exceeding the $25,000 threshold.

g. A participant in a covered transaction may rely upon a certification of a prospective participant in a lower tier covered transaction that is not debarred, suspended, ineligible, or voluntarily excluded from the covered transaction, unless it knows that the certification is erroneous. A participant is responsible for ensuring that its principals are not suspended, debarred, or otherwise ineligible to participate in covered transactions. To verify the eligibility of its principals, as well as the eligibility of any lower tier prospective participants, each participant may, but is not required to, check the Excluded Parties List System website (https://www.epls.gov/), which is compiled by the General Services Administration.

h. Nothing contained in the foregoing shall be construed to require establishment of a system of records in order to render in good faith the certification required by this clause. The knowledge and information of participant is not required to exceed that which is normally possessed by a prudent person in the ordinary course of business dealings.

i. Except for transactions authorized under paragraph e of these instructions, if a participant in a covered transaction knowingly enters into a lower tier covered transaction with a person who is suspended, debarred, ineligible, or voluntarily excluded from participation in this transaction, in addition to other remedies available to the Federal Government, the department or agency with which this transaction originated may pursue available remedies, including suspension and/or debarment.

* * * * *

Certification Regarding Debarment, Suspension, Ineligibility and Voluntary Exclusion--Lower Tier Participants:

1. The prospective lower tier participant certifies, by submission of this proposal, that neither it nor its principals is presently

REQUIRED CONTRACT PROVISIONS (cont.)

debarred, suspended, proposed for debarment, declared ineligible, or voluntarily excluded from participating in covered transactions by any Federal department or agency.

2. Where the prospective lower tier participant is unable to certify to any of the statements in this certification, such prospective participant shall attach an explanation to this proposal.

* * * * *

XI. CERTIFICATION REGARDING USE OF CONTRACT FUNDS FOR LOBBYING

This provision is applicable to all Federal-aid construction contracts and to all related subcontracts which exceed $100,000 (49 CFR 20).

1. The prospective participant certifies, by signing and submitting this bid or proposal, to the best of his or her knowledge and belief, that:

a. No Federal appropriated funds have been paid or will be paid, by or on behalf of the undersigned, to any person for influencing or attempting to influence an officer or employee of any Federal agency, a Member of Congress, an officer or employee of Congress, or an employee of a Member of Congress in connection with the awarding of any Federal contract, the making of any Federal grant, the making of any Federal loan, the entering into of any cooperative agreement, and the extension, continuation, renewal, amendment, or modification of any Federal contract, grant, loan, or cooperative agreement.

b. If any funds other than Federal appropriated funds have been paid or will be paid to any person for influencing or attempting to influence an officer or employee of any Federal agency, a Member of Congress, an officer or employee of Congress, or an employee of a Member of Congress in connection with this Federal contract, grant, loan, or cooperative agreement, the undersigned shall complete and submit Standard Form-LLL, "Disclosure Form to Report Lobbying," in accordance with its instructions.

2. This certification is a material representation of fact upon which reliance was placed when this transaction was made or entered into. Submission of this certification is a prerequisite for making or entering into this transaction imposed by 31 U.S.C. 1352. Any person who fails to file the required certification shall be subject to a civil penalty of not less than $10,000 and not more than $100,000 for each such failure.

3. The prospective participant also agrees by submitting its bid or proposal that the participant shall require that the language of this certification be included in all lower tier subcontracts, which exceed $100,000 and that all such recipients shall certify and disclose accordingly.

ATTACHMENT A - EMPLOYMENT AND MATERIALS

PREFERENCE FOR APPALACHIAN DEVELOPMENT HIGHWAY SYSTEM OR APPALACHIAN LOCAL ACCESS ROAD CONTRACTS

This provision is applicable to all Federal-aid projects funded under the Appalachian Regional Development Act of 1965.

1. During the performance of this contract, the contractor undertaking to do work which is, or reasonably may be, done as on-site work, shall give preference to qualified persons who regularly reside in the labor area as designated by the DOL wherein the contract work is situated, or the subregion, or the Appalachian counties of the State wherein the contract work is situated, except:

a. To the extent that qualified persons regularly residing in the area are not available.

b. For the reasonable needs of the contractor to employ supervisory or specially experienced personnel necessary to assure an efficient execution of the contract work.

c. For the obligation of the contractor to offer employment to present or former employees as the result of a lawful collective bargaining contract, provided that the number of nonresident persons employed under this subparagraph (1c) shall not exceed 20 percent of the total number of employees employed by the contractor on the contract work, except as provided in subparagraph (4) below.

2. The contractor shall place a job order with the State Employment Service indicating (a) the classifications of the laborers, mechanics and other employees required to perform the contract work, (b) the number of employees required in each classification, (c) the date on which the participant estimates such employees will be required, and (d) any other pertinent information required by the State Employment Service to complete the job order form. The job order may be placed with the State Employment Service in writing or by telephone. If during the course of the contract work, the information submitted by the contractor in the original job order is substantially modified, the participant shall promptly notify the State Employment Service.

3. The contractor shall give full consideration to all qualified job applicants referred to him by the State Employment Service. The contractor is not required to grant employment to any job applicants who, in his opinion, are not qualified to perform the classification of work required.

4. If, within one week following the placing of a job order by the contractor with the State Employment Service, the State Employment Service is unable to refer any qualified job applicants to the contractor, or less than the number requested, the State Employment Service will forward a certificate to the contractor indicating the unavailability of applicants. Such certificate shall be made a part of the contractor's permanent project records. Upon receipt of this certificate, the contractor may employ persons who do not normally reside in the labor area to fill positions covered by the certificate, notwithstanding the provisions of subparagraph (1c) above.

5. The provisions of 23 CFR 633.207(e) allow the contracting agency to provide a contractual preference for the use of mineral resource materials native to the Appalachian region.

APPENDIX A (Short Version)
REQUIRED CONTRACT PROVISIONS
FEDERAL-AID CONSTRUCTION CONTRACTS

The Required Contract Provisions for Federal-aid construction contracts, Form FHWA-1273 (Rev. 4-93) is restated here for emphasis:

Section IV. PAYMENT OF PREDETERMINED MINIMUM WAGE

Section IV.2, Classification

2. Classification

a. The SHA contracting officer shall require that any class of laborers or mechanics employed under the contract, which is not listed in the wage determination, shall be classified in conformance with the wage determination.

b. The contracting officer shall approve an additional classification, wage rate and fringe benefits only when the following criteria have been met:

(1) the work to be performed by the additional classification requested is not performed by a classification in the wage determination;

(2) the additional classification is utilized in the area by the construction industry;

(3) the proposed wage rate, including any bona fide fringe benefits, bears a reasonable relationship to the wage rates contained in the wage determination; and

(4) with respect to helpers as defined in Section IV.4(c), when such a classification prevails in the area in which the work is performed.

For implementation reference Section IV.2(c), (d) and (e).

THE FOLLOWING CERTIFICATION WITH REGARD TO THE PERFORMANCE OF PREVIOUS CONTRACTS OR SUBCONTRACTS SUBJECT TO THE EQUAL OPPORTUNITY CLAUSE AND THE FILING OF REQUIRED REPORTS SHALL BE EXECUTED BY THE BIDDER.

The bidder hereby certifies the he/she has _____, has not _____, participated in a previous contract or subcontract subject to the equal opportunity clause, as required by Executive Orders 10925, 11114 or 11246, and that he/she has _____, has not _____, filed with the Joint Reporting Committee, the Director of the Office of Federal Contract Compliance, a Federal Government contracting or administering agency, or the former President's Committee on Equal Employment Opportunity, all reports due under the applicable filing requirements.

_____
(Company)

By: _____

_____
(Title)

Date: _____

Note: The above certification is required by the Equal Employment Opportunity Regulations of the Secretary of Labor (41CFR 60-1.7(b)(1)), and must be submitted by bidders and proposed subcontractors only in connection with contracts and subcontracts which are exempt from the equal opportunity clause. Contracts and subcontracts which are exempt from the equal opportunity clause are set forth in 41 CFR 60-1.5. (Generally only contracts or subcontracts of $10,000 or under are exempt.)

Currently, Standard Form 100 (EEO-1) is the only report required by Executive Orders or their implementing regulations.

Proposed prime contractors and subcontractors who have participated in a previous contract or subcontract subject to the Executive Orders and have not filed the required reports should note that 41 CFR 60-1.7(b)(1) prevents the award of contracts and subcontracts unless such contractor submits a report covering the delinquent period or such other period specified by the Federal Highway Administration or by the Director, Office of Federal Contract Compliance, U.S. Department of Labor.

Mn/DOT 21658A (03-01)

MINNESOTA DEPARTMENT OF TRANSPORTATION
CONTRACTOR – SUBCONTRACTOR'S
STATEMENT OF COMPLIANCE
FEDERAL COPELAND ACT / DAVIS BACON ACT
MINNESOTA PREVAILING WAGE STATUTES

REPORT NUMBER	STATE PROJECT NUMBER(S)		DATE
CONTRACTOR/SUBCONTRACTOR		PHONE NUMBER	CONTRACT NUMBER
ADDRESS			FEDERAL PROJECT NUMBER
TYPE OF WORK			

(Complete as described on proposal.)

STATEMENT WITH RESPECT TO COMPLIANCE AND WAGES PAID

I, _____, _____ _____do hereby state:
(Name of signatory party) (Title)

(1) That I pay or supervise the payment of the persons employed by _____ on said Contract; that during the payroll period commencing on the _____ day of _____ of the year _____, and ending the _____ day of _____ of the year _____, there were _____ employees performing covered work on said Contract. That all persons performing work under said Contract are listed on the payroll and have been paid the full prevailing wages for all hours worked under said Contract, that no rebates and or deductions have or will be made either directly or indirectly to or on behalf of said _____ from the full wages earned by any person, other than permissible deductions as defined in
(Contractor or Subcontractor) Regulations, Part 3 (29 CFR Subtitle A), issued by the U.S. Secretary of Labor under the Copeland Act, as amended (48 Stat. 948, 63 Stat. 108, 72 Stat. 967; 76; Stat. 357; 40 U.S.C. 276c); and/or permissible deductions as defined in Minnesota Statutes 177.24, Subdivision 4, 181.06, and 181.79, issued by the Minnesota Commissioner of Labor and Industry and described below.

DESCRIBE LEGAL DEDUCTIONS

_____

_____

_____

(2) That the payroll submitted under said Contract is complete and accurate; that the wage rate(s) of the laborer(s), mechanic(s), and worker(s) performing work under said Contract is (are) paid according to the wage determination(s) and labor provisions incorporated in said Contract and according to applicable laws; that wages paid to laborer(s), mechanic(s), and worker(s) performing work under said Contract is at least the prevailing wage rate for the most similar classification of labor performed as defined under applicable law; and that the laborer(s), mechanic(s), and worker(s) performing work under said Contract is (are) paid for all hours in excess of the prevailing hours at a rate of at least one and one-half times the applicable base rate of pay.

(3) That any apprentices employed during said payroll period are duly registered in a bona fide apprenticeship program registered with the Minnesota Department of Labor and Industry, or are registered with the Bureau of Apprenticeship and Training; United States Department of Labor.

(4) That:

(a) WHERE FRINGE BENEFITS ARE PAID TO <u>ANY</u> APPROVED PLANS, FUNDS, OR PROGRAMS

☐ In addition to the basic hourly wage rates paid to each laborer, worker or mechanic listed on said payroll, payments to current, bona fide fringe benefit programs as set forth in paragraph 4(d), have been or will be made to the program's administrators as set forth in paragraph 4(e) for the benefit of said employees, except as noted in Section 4(c).

(b) WHERE FRINGE BENEFITS ARE PAID IN CASH TO <u>ALL</u> EMPLOYEES

☐ Each laborer, worker, or mechanic listed on said payroll has been paid, as indicated on the payroll, an amount not less than the sum of the applicable basic rate plus the fringe rate as listed in the appropriate wage determination incorporated into said Contract.

NOTE ----FRINGE BENEFIT SECTIONS C, D, E AND SIGNATURE BLOCK IS ON REVERSE SIDE.

(c) **EXCEPTIONS**

EMPLOYEE NAME	CLASSIFICATION/OCCUPATION	EXPLANATION

(d) **BENEFIT PROGRAM INFORMATION in DOLLARS CONTRIBUTED PER HOUR (Must be completed if 4(a) is checked.)**

PROGRAM TITLE, CLASSIFICATION TITLE, OR INDIVIDUAL EMPLOYEES	HEALTH / WELFARE	VACATION / HOLIDAY	APPRENTICESHIP / TRAINING	PENSION	OTHER INCLUDE TITLE
	$	$	$	$	$
	$	$	$	$	$
	$	$	$	$	$
	$	$	$	$	$
	$	$	$	$	$
	$	$	$	$	$
	$	$	$	$	$
	$	$	$	$	$
	$	$	$	$	$
	$	$	$	$	$

(e) **BENEFIT PROGRAM INFORMATION (Must be completed if 4(a) is checked.)**

NAME AND ADDRESS OF FRINGE BENEFIT FUND, PLAN, OR PROGRAM ADMINISTRATOR	BENEFIT ACCOUNT NUMBER	THIRD PARTY TRUSTEE AND/OR CONTACT PERSON	TELEPHONE NUMBER

The willful falsification of any of the above statements may subject the contractor or subcontractor to civil or criminal prosecution under federal and/or state law. See Minnesota Statute 16B, 161.315, Subdivision 2, 177.43, Subdivision 5, 177.44, Subdivision 6, 609.63; or United States Code 18 U.S.C. 1001, 31 U.S.C. 231, CFR 5.12.

NAME AND TITLE OF CONTRACTOR'S REPRESENTATIVE	SIGNATURE
As a representative of the contractor submitting the payroll identified above, I hereby certify that the payroll is true and correct to the best of my knowledge.	

NAME AND TITLE OF PRIME CONTRACTOR'S REPRESENTATIVE	SIGNATURE
As a representative of the prime contractor, I hereby certify that the payroll identified above have been received and are available for review.	

NOTE: For information regarding this form, submission of payroll records, or copies of the laws stated above, contact the Minnesota Department of Transportation, Labor Compliance Unit, Mail Stop 650, 395 John Ireland Boulevard, St. Paul, Minnesota 55155-1899, or call (651) 297-5716 or (651) 296-6353.

NON-COLLUSION AFFIDAVIT

The following Non-Collusion Affidavit shall be executed by the bidder:

State Project No. _____

Federal Project No. _____

State of Minnesota _____)

) ss

County of _____)

I, _____, do state under penalty of
(name of person signing this affidavit)

perjury under 28 U.S.C. 1746 of the laws of the United States:

(1) that I am the authorized representative of _____

_____
(name of person, partnership or corporation submitting this proposal)

and that I have the authority to make this affidavit for and on behalf of said bidder;

(2) that, in connection with this proposal, the said bidder has not either directly or indirectly entered into any agreement, participated in any collusion or otherwise taken any action in restraint of free competitive bidding;

(3) that, to the best of my knowledge and belief, the contents of this proposal have not been communicated by the bidder or by any of his/her employees or agents to any person who is not an employee or agent of the bidder or of the surety on any bond furnished with the proposal and will not be communicated to any person who is not an employee or agent of the bidder or of said surety prior to the official opening of the proposal, and

(4) that I have fully informed myself regarding the accuracy of the statements made in this affidavit.

Signed: _____
(bidder or his authorized representative)

ATTACHMENT

Dakota County Environmental Management Department & Water Resources

Jeff Harthun	- Environmental Management Director (952) 891-7555
Laura Villa	- Lead Environmental Specialist / Household Hazardous Waste/ The Recycling Zone. (952) 891-7548
Lori Frekot	- Supervisor / Environmental Initiatives Unit (952) 891-7002
Mike Lynn	- Waste Regulation Supervisor/ Waste Regulation Unit (952) 891-7025
Terry Muller	- Environmental Specialist / Solid Waste Regulation / Industrial Waste & Landfills (952) 891-7543
Dale Stoerzinger	- Environmental Specialist / Solid Waste Regulation / Yard Waste / Hazardous Waste / Hauler Financial Incentive (952) 891-7017
Renee Burman	- Rural Solid Waste Commission/ Recycling / Communications (952) 891-7042
Vacant	- HW License/Inspection/ Emergency Response (952) 891-7547
Theresa Di Marco	- Environmental Specialist / Environmentally Friendly Purchasing / Energy / Recycling (952) 891-7017
Dave Magnuson	- HW License/ Inspection/ Flint Hills (952) 891-7551
Rolland Meillier	- Hauler Licensing/ Land Application / Hazardous Waste / Solid Waste / Electronics (952) 891-7545
David Swenson	- Director / Water Resources Department (952) 891-7554
Rebecca Kulas	- Environmental Specialist / Community Funding / Environmental Education / Product Stewardship/ Recycling (952) 891-7043
Thomas A Berry	- Senior Planner/ Water Resources Department (952) 891-7044
Dee McDaniels	- Water Resources Technician/ Shoreland Zoning and Flood Plan Management/ Water Resources Department (952) 891-7024

Tae Kim	- Senior Water Engineer/ Water Resources Department / Byllesby Dam (952) 891-7140
Bev Schomburg	- Environmental Health Specialist / Water Resource Department / Indoor Air Quality / Mold / Radon / Brownfields and Contaminated Sites (952) 891-7552
Steve Scott	- Water Resources Specialist / Water Resources Department / Brownfields and Contaminated Sites Unit (952) 891-7537
Cathy Undem	- Hydrogeologist/ Water Resources Department / Brownfields and Contaminated Sites (952) 891- 7532
Paula Liepold	- Water Education Specialist/ Water Resources Department (952) 891 -7117
Jeffrey Luehrs	- Water Resources Specialist / Well and Water Inspections (952) 891 -7553
Bill Olsen	-Hydrogeologist Specialist / Ground Water Modeling & Well Head Protection (952) 891-7549
Michael Rutten	- Water Resources Specialist / Septic Systems & Well Sealing (952) 891-7008
Vanessa Demuth	- Environmental Geologist / Registered Well Program & Site Assessment (952) 891-7010
Jill V. Trescott	- Supervisor, Groundwater Protection, Brownfields and Contaminated Sites / Water Resources Department
Mark Zabel	- Supervisor, Surface Water and Vermillion River Watershed (952) 891-7011
Katherine Carlson	- Water Resources Specialist (952) 891-7011
Travis Thiel	-Water Resources Specialist / Surface Water (952) 891-7546

Sanitary Landfills (For Public Use)

Pine Bend Sanitary Landfill 2495 East 117th Street Inver Grove Heights, MN 55075 (651) 457-2778	Burnsville Sanitary Landfill 1000 West Cliff Road Burnsville, MN 55337 (952) 890-3248	Burnsville Demolition Construction 1000 West Cliff Road Burnsville, MN 55337 (952) 890-3248

Dakota County Solid Waste Management Policy and Procedures

COUNTY AUTHORITY

In 1977, the Dakota County Board of Commissioners adopted Dakota County Ordinance No. 110, Solid Waste Management (Ordinance 110), to regulate all matters relating to solid waste management within the County. This includes the collection and transportation of solid waste and solid waste disposed of at licensed sanitary landfills demolition landfills, or special waste facilities as well as disposal at unlicensed facilities. The Dakota County Environmental Management Department (the Department) is an agency within the Physical Development Division of Dakota County, and operates under the direction of the Dakota County Board of Commissioners. The Department has the duty to implement and enforce Ordinance 110 for Dakota County.

COUNTY REQUIREMENTS

Ordinance 110, Section 3.01(A), states the following:

"No person shall make nor allow his land or property under his control to be used for intermediate or final disposal of any solid waste except at a waste facility for which a license has been granted by the County Board."

In addition, Ordinance 110, Section 3.18(A), states that "Any person who fails to comply with the provisions of this ordinance is guilty of a misdemeanor, and upon conviction thereof, shall be punished as provided by law."

What is solid waste?

Ordinance 110 defines solid waste as “Garbage, Refuse, sludge from a water supply treatment plant or air containment treatment facility and other discarded waste materials and sludges in solid semisolid, liquid, or contained gaseous form, resulting from industrial, commercial, mining and agricultural operations and from community activities...”

Animal carcasses and demolition wastes, including bricks, asphalt, cinder blocks and concrete soils that are chemically contaminated or are contaminated with debris are solid wastes and must be managed in accordance with the requirements outlined in Ordinance 110.

What is a disposal site?

A disposal site is defined as any tract of land, including any constructed facility, at which solid waste is disposed of in or on the land.

What is a demolition landfill?

A demolition landfill is defined in Ordinance 110, Section 2.26, as "an area of land used for disposal of demolition waste".

What is demolition waste?

Demolition waste is defined in Ordinance 110, Section 2.27, as waste resulting from the demolition of man-made structures, and other similar materials specifically approved by the Department. This excludes asbestos and other materials specifically prohibited by the ordinance and the Department.

Obtaining a County license for approval of a site such as a demolition landfill will require the license applicant to engage the services of an engineering consulting firm, to provide site plans and the necessary hydrogeological information required by the Department to properly assess the site for possible impacts to the ground water. An application review fee and yearly license fee is required.
In order for the Department to ensure that a demolition landfill is being operated in a manner that will prevent environmental problems and health concerns, licensing system that includes detailed site plans, operational reports, and inspections by Department staff must be implemented. At the present time there is one licensed demolition landfill and two licensed sanitary landfills that are available for public use in Dakota County where demolition waste can be properly disposed of.

Ordinance 110 does allow the use of certain solid wastes, including certain demolition wastes, as fill for beneficial land use projects where the potential for environmental, public health and safety problems are minimal. The Ordinance requires, however, that such projects meet certain requirements, and the Department must review and approve the projects before the initiation of fill activities. Please contact Rolland Meillier, Dakota County Environmental Specialist at (952) 891-7545 for further information on such projects.

The unauthorized disposal of solid waste at unlicensed sites within Dakota County will be addressed through administrative and judicial enforcement action to achieve proper cleanup. Proper cleanup shall consist of the complete removal and transport of the waste to a licensed landfill if disposed of within Dakota County. If the waste is disposed of outside Dakota County, disposal methods must conform to all state, county, and local rules and regulation applicable to the disposal area.

The Department urges all citizens of Dakota County to help inform the Department about unauthorized dumping and/or unlicensed waste disposal sites located within the County. Your name need not be given when calling the Department with information. The Department does request that callers obtain as much information as possible about the site (e.g., license plate number, general description of waste present) and accurate directions to the site before calling.

Once a call is received and directions obtained, a member of the Solid Waste Regulation staff will investigate the site to verify the complaint. If verified, waste present at the site will be documented, photos will be taken, and a follow up investigation will commence. The property owner will be identified and contacted to obtain information concerning the situation at the site. The Department will then require the property owner to take immediate action to prevent further dumping on the property by blocking off access roads to the site, and to begin clean-up of the site.

BOARD OF COUNTY COMMISSIONERS
DAKOTA COUNTY, MINNESOTA

May 17, 2011 | Resolution No. 11-240

Motion by Commissioner Gaylord | Second by Commissioner Workman

---

Authorization To Revise Bid, Grant And Contracting Policy To Address Changes In State Uniform Municipal Contracting Law And Cedar Avenue Bus Rapid Transit Shoulder Projects

WHEREAS, the Dakota County Board of Commissioners, by Resolution No. 90-376 (April 24, 1990), adopted its Bid, Grant and Contract Policy and amended it in 1993, 1994 and 2001 (Resolution Nos. 93-572, 94-197 and 01-767); and

WHEREAS, since 2001, the State legislature has amended State law respecting County purchasing; and

WHEREAS, the County Board, having reviewed the legislative amendments desires to amend its Bid, Grant and Contract Policy to reflect such amendments; and

WHEREAS, the County Board desires to increase the County Administrator's authority to approve and sign contracts that are included in the County budget; and

WHEREAS, in order to ensure that the Cedar Avenue Bus Rapid Transit shoulder construction projects are timely completed so that revenue service may commence during 2012, the County Board desires to amend its Bid, Grant and Contract Policy to increase the amount of contract amendment authority delegated to the County Administrator.

NOW, THEREFORE, BE IT RESOLVED, That the Dakota County Board of Commissioners hereby adopts the following Bid, Grant and Contract Principles, effective May 17, 2011:

1. Competition. The County Board favors competition in connection with County purchases, sales, leases, rentals, and other agreements to which Dakota County is a party.

   a. Contracts as defined in Minn. Stat. §§ 375.21 and 471.345.

      Contracts for work or labor, or to purchase furniture, fixtures, or other property, or to construct or repair roads, bridges or buildings, or the sale or purchase of supplies, materials, equipment or the rental thereof, or the construction, alteration, repair or maintenance of real and personal property, shall be made as follows:

      (i) If valued in excess of $100,000

      - After soliciting sealed bids by public notice, or
      - Through the State of Minnesota Cooperative Purchasing Venture, or
      - Through any cooperative purchasing agreement which secures contracts on the basis of competitive bids or quotes from more than one source.

      (ii) If valued from $1001 through $100,000

      - After soliciting three quotations, when possible.
      - For materials and supplies, one quote must be from the State of Minnesota Cooperative Purchasing Venture.

      (iii) If valued from $1 through $1000

      - In the open market, using any method to assure favorable pricing.

b. Other Contracts

If valued in excess of $50,000

- After soliciting Requests for Proposals or Requests for Qualifications, so far as practicable and reasonable, or
- In the open market.

2. Efficiency. The County Board favors contract and grant procedures that are based upon the principles of delegation and decentralization.

a. A solicitation for sealed bids, request for proposals or request for qualifications may be issued by the County Administrator when funds for the proposed purchase are specifically included within the budget or capital improvement plan or capital equipment plan, without additional authorization from the County Board.

b. Contracts as defined in Minn. Stat. §§ 375.21 and 471.35 valued at less than $100,000 and other contracts valued at less than $50,000 may be approved and signed by the County Administrator when funds for the contract are specifically included within the budget or Capital Improvement Program (CIP) or Capital Equipment Plan (CEP) or will be funded pursuant to the Budget Incentive Policy adopted in Resolution No. 93-715. Contracts as defined in Minn. Stat. §§ 375.21 and 471.35 valued in excess of $100,000 and other contracts valued in excess of $50,000 and contracts for which the funds are not included within the budget or CIP or CEP and which will not be funded pursuant to the Budget Incentive Policy require approval by resolution of the County Board.

c. Joint powers agreements and joint purchasing agreements require approval by resolution of the County Board.

d. Sales, leases or purchases of real property to which Dakota County is a party require approval by resolution of the County Board.

e. Contracts for the maintenance of computer hardware or software may be approved and signed by the County Administrator, regardless of the value of the contract, when sufficient funds for the contract are included in the budget.

f. Except as provided in the following sentence, amendments to construction contracts may be approved by the County Administrator when the amendment does not materially alter the scope of services being provided pursuant to the contract provided that the total of all amendments to the contract do not exceed $100,000 and the funds are included in the CIP budget for that project.

g. Amendments to the construction contract for the Cedar Bus Rapid Transit shoulder construction projects may be approved by the County Administrator when the amendment does not materially alter the scope of services being provided pursuant to the contract, provided that (i) the total of all amendments to the contract does not exceed 5% of the total contract amount exclusive of elements funded 100% by third parties, and (ii) no single amendment exceeds $250,000 in value, exclusive of amendments relative to elements funded 100% by third parties.

h. Contract amendments for County Board authorized contracts, other than for construction, may be approved by the County Administrator when the amendment does not materially alter the scope of services being provided in the existing contract, and the amendment does not exceed 10 percent of the existing contract amount or $5,000, whichever is greater, in the aggregate with all other amendments, and specifically budgeted funds are within the department line item budget.

i. For grants that are included in the budget, the County Administrator may apply for the grant, accept the grant and sign the grant agreement, unless the grant award exceeds the amount in the budget by $50,000 or more, whereupon acceptance of the grant requires approval by resolution of the County Board.

j. For grants that are not included in the budget, the County Administrator may apply for the grant, accept the grant and sign the grant agreement, where the grant amount does not exceed $50,000 and the grant funds will only be used to support existing County programs and will not be used to increase the number of County FTE's.

k. For purposes of this policy, County Administrator means County Administrator or designee. The County Administrator may delegate authority under this policy by written delegations which specifically identify the authorities delegated, the individuals to whom authority is delegated, the duration of the delegation (not to exceed two years) and which are maintained on file with the Clerk to the Board. For purposes of Section 2, paragraphs a, b, e, g, and h of this policy, the County Attorney and the County Sheriff have the same authority as the County Administrator with respect to their respective departments.

3. Legal compliance. All county purchases, sales, rentals, leases and other agreements shall comply with applicable law and regulations.

   a. Agreements are subject to review and approval as to form by the County Attorney.

   b. Each prospective County contractor shall be required to disclose whether any of its owners, directors, officers or principals is or is closely related to any County employee who has or may appear to have any control over the award, management or evaluation of the contract.

   c. If there is no legal conflict of interest that would prohibit a contract, but there is a question as to whether there may be an appearance of such a conflict, the contract shall be presented to the County Board for approval, regardless of the amount of the contract. The County Board shall have sole discretion to determine whether an appearance of a conflict of interest should bar a proposed contract not governed by the law applicable to competitive bidding.

   d. All contracts must be in writing, unless the County Attorney advises that a written contract is not legally required and the County Administrator has waived the necessity of a written contract.

4. Emergency Purchasing Authorization. The County Board recognizes that emergency circumstances may arise which require that county staff enter into agreements to prevent loss or damage to persons or to county property, without complying with contract procedures. Therefore, the County Administrator is authorized to enter into contracts on an emergency basis, consistent with the following:

   a. In the case of an emergency arising from breakage, damage, or decay in county property that cannot be allowed to wait for the time required to advertise for bids, contract(s) for repairs may be made without advertising for bids, provided that the contract(s) for the repairs be presented to the County Board for ratification at the next meeting of the County Board, regardless of the amount of the contract.

   b. In the case of an emergency which may put at risk the health or safety of county clients and that cannot be allowed to wait for the time required to secure County Board approval of a contract to purchase services, the County Administrator (i) may enter into a contract to make the purchase of services, provided that the contract be presented to the County Board for ratification at the next meeting of the County Board or (ii) may exercise the authority to advance funds to an agency already under contract pursuant to Resolution No. 97-679; and

BE IT FURTHER RESOLVED, That the County Administrator is hereby directed to prepare an administrative policy consistent with these principles; and

BE IT FURTHER RESOLVED, That Resolution No. 01-767 is hereby rescinded, effective May 17, 2011.

STATE OF MINNESOTA
County of Dakota

	YES		NO
Harris	X	Harris	
Gaylord	X	Gaylord	
Egan	X	Egan	
Schouweiler	X	Schouweiler	
Workman	X	Workman	
Krause	X	Krause	
Branning	Absent	Branning	

I, Kelly Olson, Clerk to the Board of the County of Dakota, State of Minnesota, do hereby certify that I have compared the foregoing copy of a resolution with the original minutes of the proceedings of the Board of County Commissioners, Dakota County, Minnesota, at their session held on the 17th day of May 2011, now on file in the County Administration Department, and have found the same to be a true and correct copy thereof.

Witness my hand and official seal of Dakota County this 18th day of May 2011.

Kelly D Olson

Clerk to the Board

Tennessen Notice
Data Privacy: Acknowledgment

In accordance with the Minnesota Government Data Practices Act, Minn. Stat. § 13.04 and § 13.591, Dakota County is required to inform you of your rights as they pertain to private or non-public information collected from you. "Private or non-public data" is information that is available to you, but not to the public.

NEED FOR INFORMATION: The information we collect or have collected from you or from other sources authorized by you is needed for evaluation of bids or proposals received by Dakota County for a highway construction contract (including signals) to determine the lowest responsive and responsible contractor to perform the planned work.

REFUSAL: You are not legally required to supply the requested data by Dakota County. You have the right to refuse to supply the information we request; however, without this information, we may be unable to properly evaluate your bid or proposal and may not be able to award you the contract to perform the planned work.

ACCESS TO DATA: Private or non-public information we collect from you may be shared, as a matter of program or service necessity, with another jurisdiction providing funding or other consultant hired by Dakota County to prepare the plans, oversee the construction, and pay for the work.

Before the County has completed its selection or evaluation process, information will not be given to any other agency or individual without your written consent unless specifically authorized by state or federal law, or under a valid court order. Unless otherwise authorized by law, government agencies with whom we share private or confidential information must also treat the information they receive as private or confidential. You, as the subject of collected data, unless otherwise specified by law or court order, may view the information we have concerning you and may make written comments as to the accuracy of the information. Copies of information we have concerning your bid or proposal may be made, for a reasonable fee, upon your request.

After the County has completed its selection or evaluation process, information that is not trade secret data will become public, as provided by Minn. Stat. § 13.591, subd. 3.

RETENTION: All information on you will be kept until federal, state and/or county retention requirements have been met, at which time the information will be destroyed. Unless otherwise noted, this consent will only be effective for a period of one (1) year from the date of signature.

IN ACCORDANCE WITH MINNESOTA STATUTES, SECTION 13.04, I HAVE BEEN INFORMED OF AND UNDERSTAND MY RIGHTS AS SUBJECT OF DATA.

_____
Name of Organization

By:_____ _____
Signature Date

Minnesota Pollution Control Agency

Complete your application online!

Application for General Stormwater Permit for Construction Activity (MN R100001)

National Pollutant Discharge Elimination System / State Disposal System (NPDES/SDS)

Please submit to: Minnesota Pollution Control Agency
Construction Stormwater Permit Program
520 Lafayette Road North, St. Paul, MN 55155-4194

PLEASE READ: This form is for new permit applications only. Use the Notice of Termination/Permit Modification form to transfer permit coverage for a project or a portion of a project to a new owner/contractor. Forms are available at the MPCA's Construction Stormwater Web site: www.pca.state.mn.us/water/stormwater/stormwater-c.html. Complete your application online!

Please refer to the application instructions and the NPDES/SDS General Stormwater Permit for Construction Activity (MN R100001) as you complete this form. Brackets '[ ]' refer to specific parts of the permit. For assistance, call the Stormwater Program at 651-757-2119 or toll-free at 800-657-3804.

Are you ready to apply?

1. Stormwater Pollution Prevention Plan (SWPPP)

a. Has a Stormwater Pollution Prevention Plan been developed for this project and incorporated into the project's plans and specifications [Part III.A] — ☒ Yes ☐ No

b. If an environmental review was required for this project or a common plan of development or sale that includes this project, has the environmental review been completed and all stormwater mitigative requirements been incorporated in the SWPPP as required in Part III.A.6 of the permit? — ☐ Yes ☐ No ☒ NA

2. Discharges to Special or Impaired Waters

a. If any portion of the project has a discharge point within 1 mile of a special water or a water that is impaired for sediment or a sediment related parameter (see Appendix A.B), does the SWPPP contain the additional requirements found in Appendix A, Part A-C? If the project does not have a discharge point within 1 mile of a special water or a water that is impaired for sediment or a sediment related parameter of the permit indicate "NA" — ☒ Yes ☐ No ☐ NA

b. If this project is discharging to a Calcareous fen, has an approval letter been obtained from the DNR as required in Part III.A.8 of the permit? — ☐ Yes ☐ No ☒ NA

STOP if you responded 'No' to any question above. A SWPPP must be developed prior to submitting a permit application. Complete the above requirements and check 'Yes' before submitting this application. Continue if you responded 'Yes' or 'NA' to all questions above.

3. Additional Application Review:

a. Will the project include alternative treatment methods? [Part III.C.5] If yes, this application and the alternative treatment plans must be submitted a minimum of 90 days before construction starts. — ☐ Yes ☒ No

b. If yes, are the plans attached? — ☐ Yes ☐ No

c. Will the project disturb 50 acres? AND Is there a discharge point within one mile of an impaired or special water whose discharge may reach an impaired or special water listed in Appendix A of the permit? [Part II.B.1.b] If yes, this application and the SWPPP must be submitted a minimum of 30 days before construction starts. — ☐ Yes ☒ No

d. If 'Yes,' is the SWPPP attached? — ☐ Yes ☐ No

4. Application Fee:

Is the required $400 Application Fee (payable to the MPCA) enclosed? ☒ Yes

Construction Activity Information

5. Project name: SP 1901-148, S.P. 179-020-031, and S.P. 019-605-028

6. Project location:

a. Briefly describe where the construction activity occurs (For example: "Intersection of 45th St. and Irving Ave.") Include address if available: Located on TH13 from Washurn Ave. to I35W in the City of Burnsville.

b. All cities where project will occur: Burnsville

c. All counties where project will occur: Dakota

d. All townships where project will occur:

e. Project ZIP Code: 55337

f. Latitude and longitude of approximate centroid of project:

Latitude: 44.7732 ° N (decimal) *Preferred* *Longitude:* 93.3049 ° W (decimal) *Preferred*

__ ° __ ' __ N (degrees, minutes, seconds) __ ° __ ' __ W (degrees, minutes, seconds)

g. Method used to collect latitude and longitude:

☐ GPS

☐ USGS Topographic map — Map scale: _____

☒ Other

7. Project size:

Number of acres to be disturbed to the nearest quarter acre: 47.1

8. Project map:

A map must be included with the application for all projects disturbing 50 acres or more. Is a project map included? ☐ Yes ☒ No

9. Project type:

☐ Residential ☐ Residential / Road construction ☐ Other: ____

☐ Commercial / Industrial ☐ Commercial / Road construction

☒ Road construction ☐ Commercial / Residential / Road construction

10. Cumulative impervious surface:

a. Existing area of impervious surface in acres: 27.3

b. Post-construction area of impervious surface in acres (If additional new impervious surface created by the project is less than one acre, skip to Question 12): 24.6

11. Permanent stormwater management:

- ☐ Wet sedimentation basin
- ☐ Infiltration / filtration
- ☐ Regional ponding
- ☐ Other (Use only if there is no feasible way of installing the treatment systems listed above for reasons such as lack of right-of-way or proximity to bedrock)
- ☐ Alternative methods (If using alternative methods, construction cannot commence until receiving approval from the MPCA.)

12. Receiving waters:

Identify surface waters within one mile of project boundary that will receive storm water from the site or discharge from permanent Stormwater management system. Include waters shown on USGS 7.5 minute quad or equivalent, all Special Waters and Impaired waters identified in Appendix A of the permit (To find Special or Impaired Waters, use the Special and Impaired Waters Search tool at www.pca.state.mn.us/water/stormwater/stormwater-c.html.

The Impaired Waters* list, also known as the Section 303(d) list can be found at http://www.pca.state.mn.us/water/tmdl/index.html Use additional paper if necessary.

* Impaired waters for the purpose of this permit are those identified as impaired for the following pollutant(s) or stressor(s): phosphorus, turbidity, dissolved oxygen, or biotic impairment

Name of water body	Type of water body (Ditch, pond, wetland, stream, river)	Special Water? See Stormwater Permit, Appendix A	Impaired Water? See Stormwater Permit, Appendix A
Minnesota River	River	☐ Yes ☐ No	☒ Yes ☐ No
Credit Rivers	River	☐ Yes ☐ No	☒ Yes ☐ No
		☐ Yes ☐ No	☐ Yes ☐ No
		☐ Yes ☐ No	☐ Yes ☐ No

13. Dates of construction

a. Start date: 11 / 01 / 2012

b. Estimated Completion date: 5 / 1 / 2015

STOP This form will not be accepted if the Owner and Contractor contact information sections, below, are BOTH not completed and signed. If the owner is also the contractor, or a contractor hasn't yet been selected, the owner must also fill out the contractor information section and sign again.

Responsible parties

BOTH PARTIES MUST SIGN

Owner

DAKOTA COUNTY TRANSPORTATION DEPARTMENT

Business or firm name

Last name	First name	Title
BECKWITH	ROSS	CONSTRUCTION ENGINEER

E-mail	Phone (include area code)
ROSS.BECKWITH@CO.DAKOTA.MN.US	952-891-7926

Mailing address	City	State	ZIP Code
2800 160TH STREET WEST	ROSEMOUNT	MN	55068

Alternate contact name	E-mail	Phone (include area code)
DEL GODDARD	DEL.GODDARD@CO.DAKOTA.MN.US	952-891-7922

I certify under penalty of law that this document and all attachments were prepared under my direction or supervision in accordance with a system designed to assure that qualified personnel properly gather and evaluate the information submitted. Based on my inquiry of the person or persons who manage this system, or the persons directly responsible for gathering the information, the information is, to the best of my knowledge and belief, true, accurate and complete. I am aware that there are significant penalties for submitting false information, including the possibility of fine and imprisonment for knowing violations.

I also certify under penalty of law that I have read, understood, and accepted all terms and conditions of the NPDES/SDS General Stormwater Permit Construction Activity (MN R100001) that authorizes stormwater discharges associated with the construction site identified on this form.

X Authorized signature: _____ Date: 9-18-12

This Application must be signed by:

- ***Corporation**: a principal executive officer of at least the level of vice-president or the duly authorized representative or agent of the executive officer if the representative or agent is responsible for the overall operation of the facility that is the subject of the permit application.*
- ***Partnership or Sole Proprietorship**: a general partner or the proprietor.*
- ***Municipality, State, Federal or Other Public Agency**: principal executive officer or ranking elected official.*

Contractor

DAKOTA COUNTY TRANSPORTATION DEPARTMENT

Business or firm name

Last name	First name	Title
BECKWITH	ROSS	CONSTRUCTION ENGINEER

E-mail	Phone (include area code)
ROSS.BECKWITH@CO.DAKOTA.MN.US	952-891-7926

Mailing address	City	State	ZIP Code
2800 160TH STREET WEST	ROSEMOUNT	MN	55068

Alternate contact name	E-mail	Phone (include area code)
DEL GODDARD	DEL.GODDARD@CO.DAKOTA.MN.US	852-891-7922

I certify under penalty of law that this document and all attachments were prepared under my direction or supervision in accordance with a system designed to assure that qualified personnel properly gather and evaluate the information submitted. Based on my inquiry of the person or persons who manage this system, or the persons directly responsible for gathering the information, the information is, to the best of my knowledge and belief, true, accurate and complete. I am aware that there are significant penalties for submitting false information, including the possibility of fine and imprisonment for knowing violations.

I also certify under penalty of law that I have read, understood, and accepted all terms and conditions of the NPDES/SDS General Stormwater Permit Construction Activity (MN R100001) that authorizes stormwater discharges associated with the construction site identified on this form.

X Authorized signature: _____ Date: 9-18-12

This Application must be signed by:

- ***Corporation**: a principal executive officer of at least the level of vice-president or the duly authorized representative or agent of the executive officer if the representative or agent is responsible for the overall operation of the facility that is the subject of the permit application.*
- ***Partnership or Sole Proprietorship**: a general partner or the proprietor.*

Minnesota Pollution Control Agency
520 Lafayette Road North
St. Paul, MN 55155-4194

Notice of Termination/ Permit Modification Form

NPDES Construction Stormwater Permit Program

Transfer or terminate your National Pollutant Discharge Elimination System (NPDES) Construction Stormwater Permit. Allowable changes are permit termination and permit transfer for all or a portion of the site. This form replaces the Notice of Termination (NOT), Permit Transfer, Permit Modification, and Subdivision Registration forms used under the former permit.

Instructions for this form are located on the Internet at http://www.pca.state.mn.us/publications/wq-strm2-60i.pdf.

Form will be invalid and returned to sender unless the checkbox associated with the applicable actions is checked and the corresponding signature is provided in section A-1, A-2, A-3, and or A-4.

Please submit to: **Construction Stormwater Permit Program**
Minnesota Pollution Control Agency
520 Lafayette Road North
St. Paul, Minnesota 55155-4194

Existing Permit Identification

a. Current permit ID: C000 _ _ _ _ _ or SUB00 _ _ _ _ _

b. Project name: _____

Project location: _____

_____

Briefly describe where the construction activity occurs (for example: Intersection of 45th St. and Irving Ave.). Include address if available.

Select Option 1, 2, or 3

1. Notice of Termination (NOT) for entire site by existing owner

Select this option when a project has achieved final stabilization with existing owner / contractor and no part of the site is being transferred to a new owner and all construction activity is complete.

c. ☐ Notice of Termination for entire existing permitted site or a subdivided site. (Current owner and contractor must sign under the "Current" Owner and "Current" Contractor sections respectively).

Check above box and sign section A-1 and A-2 on page 2.

2. Transfer of entire site to new owner or contractor (Transfer/Modification)

Select this option if the ***entire*** site (represented by the ID above) has either a new owner and/or new general contractor. Check all the boxes below that apply.

d ☐ New Owner for entire existing permitted site.

e. ☐ New Contractor for entire existing permitted site.

f. ☐ Current Owner for entire existing permitted site.

g. ☐ Current Contractor for entire existing permitted site.

Check above box(es) and sign section A-3 and A-4 page 3 and or check above box(es) and sign section A-1 and A-2 page 2

Both "Current" and "New" Parties must sign this form (preferred), however, separate forms are acceptable.

3. Transfer of a portion of a site to a new owner or contractor (Subdivision)

Select this option if a ***portion*** of a site (permitted under the ID above) has either a new owner and/or new general contractor. Check the boxes below that apply.

h. Describe the portion of the site being transferred: Lot _____ Block _____

Project location/address: _____

City, State, and Zip: _____

Example: SW quadrant of 45th Street and Irving Avenue or Lots 1-17 of block 20. Include list of addresses if available or include a map

i. ☐ New Owner for portion of existing site.

j. ☐ New Contractor for portion of existing site.

k. ☐ Current Owner of the portion to be transferred.

l. ☐ Current Contractor of the portion to be transferred.

Check above box(es) and sign section A-3 and A-4 page 3 and or check above box(es) and sign section A-1 and A-2 page 2

Both "Current" and "New" Parties must sign this form (preferred), however, separate forms are acceptable.

Current Owner Authorized Signature (A-1)

Business/Firm name: _____

Last name: _____ First name: _____ Title: _____

E-mail address: _____ Telephone: ( ) _____ Ext. _____

Mailing address: _____

City: _____ State: _____ Zip code: _____

Alternate contact:

Last name: _____ First name: _____ Title: _____

E-mail address: _____ Telephone: ( ) _____ Ext. _____

I certify under penalty of law that this document and all attachments were prepared under my direction or supervision in accordance with a system designed to assure that qualified personnel properly gather and evaluate the information submitted. Based on my inquiry of the person or persons who manage this system, or the persons directly responsible for gathering the information, the information is, to the best of my knowledge and belief, true, accurate and complete. I am aware that there are significant penalties for submitting false information, including the possibility of fine and imprisonment for knowing violations.

I also certify under penalty of law that I have read, understood, and accepted all terms and conditions of the National Pollutant Discharge Elimination System (NPDES)/State Disposal System (SDS) General Stormwater Permit Construction Activity (MN R100001) that authorizes stormwater discharges associated with the construction site identified on this form.

Authorized signature: _____ Date: _____

This Application must be signed by: ***Corporation:*** *a principal executive officer of at least the level of vice-president or the duly authorized representative or agent of the executive officer if the representative or agent is responsible for the overall operation of the facility that is the subject of the permit application.* ***Partnership or Sole Proprietorship****: a general partner or the proprietor.* ***Municipality, State, Federal or Other Public Agency:*** *principal executive officer or ranking elected official.*

Current Contractor Authorized Signature (A-2)

Business/Firm name: _____

Last name: _____ First name: _____ Title: _____

E-mail address: _____ Telephone: ( ) _____ Ext. _____

Mailing address: _____

City: _____ State: _____ Zip code: _____

Alternate contact:

Last name: _____ First name: _____ Title: _____

E-mail address: _____ Telephone: ( ) _____ Ext. _____

I certify under penalty of law that this document and all attachments were prepared under my direction or supervision in accordance with a system designed to assure that qualified personnel properly gather and evaluate the information submitted. Based on my inquiry of the person or persons who manage this system, or the persons directly responsible for gathering the information, the information is, to the best of my knowledge and belief, true, accurate, and complete. I am aware that there are significant penalties for submitting false information, including the possibility of fine and imprisonment for knowing violations.

I also certify under penalty of law that I have read, understood, and accepted all terms and conditions of the National Pollutant Discharge Elimination System (NPDES)/State Disposal System (SDS) General Stormwater Permit Construction Activity (MN R100001) that authorizes stormwater discharges associated with the construction site identified on this form.

Authorized signature: _____ Date: _____

This Application must be signed by: ***Corporation:*** *a principal executive officer of at least the level of vice-president or the duly authorized representative or agent of the executive officer if the representative or agent is responsible for the overall operation of the facility that is the subject of the permit application.* ***Partnership or Sole Proprietorship****: a general partner or the proprietor.* ***Municipality, State, Federal or Other Public Agency:*** *principal executive officer or ranking elected official.*

"New" Owner Authorized Signature (A-3)

Business/Firm name: _____

Last name: _____ First name: _____ Title: _____

E-mail address: _____ Telephone: ( ) _____ Ext. _____

Mailing address: _____

City: _____ State: _____ Zip code: _____

Alternate contact:

Last name: _____ First name: _____ Title: _____

E-mail address: _____ Telephone: ( ) _____ Ext. _____

I certify under penalty of law that this document and all attachments were prepared under my direction or supervision in accordance with a system designed to assure that qualified personnel properly gather and evaluate the information submitted. Based on my inquiry of the person or persons who manage this system, or the persons directly responsible for gathering the information, the information is, to the best of my knowledge and belief, true, accurate and complete. I am aware that there are significant penalties for submitting false information, including the possibility of fine and imprisonment for knowing violations.

I also certify under penalty of law that I have read, understood, and accepted all terms and conditions of the National Pollutant Discharge Elimination System (NPDES)/State Disposal System (SDS) General Stormwater Permit Construction Activity (MN R100001) that authorizes stormwater discharges associated with the construction site identified on this form.

Authorized signature: _____ Date: _____

This Application must be signed by: ***Corporation:*** *a principal executive officer of at least the level of vice-president or the duly authorized representative or agent of the executive officer if the representative or agent is responsible for the overall operation of the facility that is the subject of the permit application.* ***Partnership or Sole Proprietorship****: a general partner or the proprietor.* ***Municipality, State, Federal or Other Public Agency:*** *principal executive officer or ranking elected official.*

"New" Contractor Authorized Signature (A-4)

Business/Firm name: _____

Last name: _____ First name: _____ Title: _____

E-mail address: _____ Telephone: ( ) _____ Ext. _____

Mailing address: _____

City: _____ State: _____ Zip code: _____

Alternate contact:

Last name: _____ First name: _____ Title: _____

E-mail address: _____ Telephone: ( ) _____ Ext. _____

I certify under penalty of law that this document and all attachments were prepared under my direction or supervision in accordance with a system designed to assure that qualified personnel properly gather and evaluate the information submitted. Based on my inquiry of the person or persons who manage this system, or the persons directly responsible for gathering the information, the information is, to the best of my knowledge and belief, true, accurate, and complete. I am aware that there are significant penalties for submitting false information, including the possibility of fine and imprisonment for knowing violations.

I also certify under penalty of law that I have read, understood, and accepted all terms and conditions of the National Pollutant Discharge Elimination System (NPDES)/State Disposal System (SDS) General Stormwater Permit Construction Activity (MN R100001) that authorizes stormwater discharges associated with the construction site identified on this form.

Authorized signature: _____ Date: _____

This Application must be signed by: ***Corporation:*** *a principal executive officer of at least the level of vice-president or the duly authorized representative or agent of the executive officer if the representative or agent is responsible for the overall operation of the facility that is the subject of the permit application.* ***Partnership or Sole Proprietorship****: a general partner or the proprietor.* ***Municipality, State, Federal or Other Public Agency:*** *principal executive officer or ranking elected official.*

If you have questions about the administrative details of the permit process go to: http://www.pca.state.mn.us/publications/wq-strm2-60i.pdf or call the Minnesota Pollution Control Agency at **651-296-6300 or 800-657-3864** and ask for *"Construction Stormwater."* If you have technical questions, ask for the *"Stormwater Policy and Technical Assistance Unit."*

CAUTION

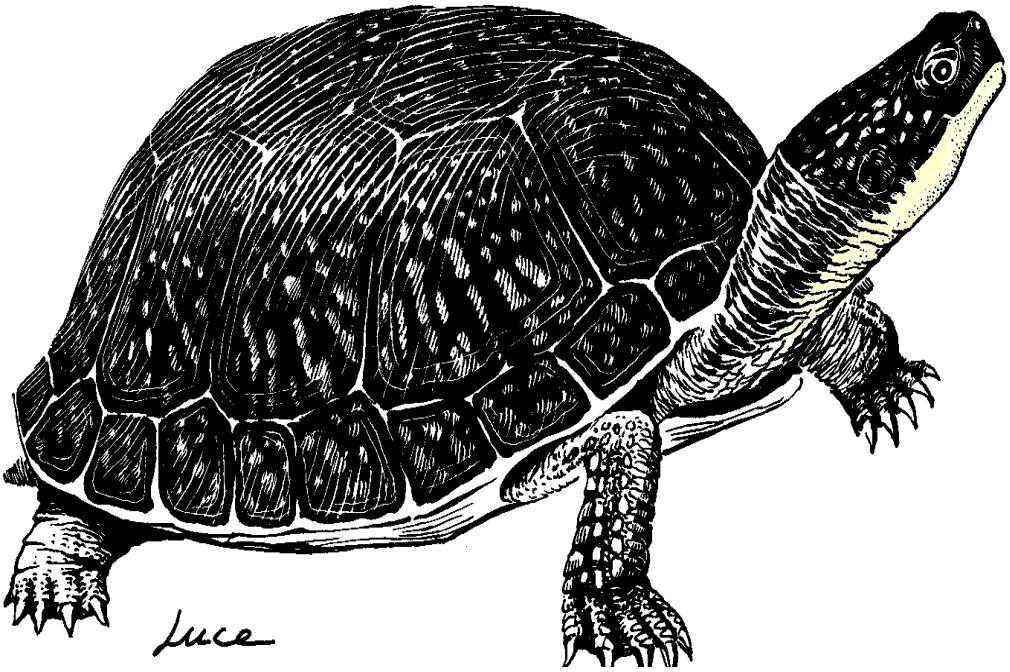

BLANDING'S TURTLES

MAY BE ENCOUNTERED IN THIS AREA

The unique and rare Blanding's turtle has been found in this area. Blanding's turtles are a State Threatened species and are protected under Minnesota Statute 84.095, Protection of Threatened and Endangered Species. Please be careful of turtles on roads and in construction sites. For additional information on turtles, or to report a Blanding's turtle sighting, contact the DNR Nongame Specialist nearest you: Bemidji (218-755-2976); Brainerd (218-828-2228); New Ulm (507-359-6033); Rochester (507-280-5070); or St. Paul (651-297-2277).

DESCRIPTION: The Blanding's turtle is a medium to large turtle (5 to 10 inches) with a black or dark blue, dome-shaped shell with muted yellow spots and bars. The bottom of the shell is hinged across the front third, enabling the turtle to pull the front edge of the lower shell firmly against the top shell to provide additional protection when threatened. The head, legs, and tail are dark brown or blue-gray with small dots of light brown or yellow. A distinctive field mark is the bright yellow chin and neck.

Illustration by Don Luce, from Turtles in Minnesota, Natural History Leaflet No. 9, June 1989, James Ford Bell Museum of Natural History

SUMMARY OF RECOMMENDATIONS FOR AVOIDING AND MINIMIZING IMPACTS TO BLANDING'S TURTLE POPULATIONS

(see Environmental Review Fact Sheet Series for full recommendations)

- A flyer with an illustration of an adult Blanding's turtle should be given to all contractors working in the area. Homeowners should also be informed of the presence of Blanding's turtles in the area.
- Turtles which are in imminent danger should be moved, by hand, out of harm's way. Turtles which are not in imminent danger should be left undisturbed to continue their travel among wetlands and/or nest sites.
- If a Blanding's turtle nests in your yard, do not disturb the nest, and do not allow pets near the nest.
- Blanding's turtles do not make good pets. It is illegal to keep this threatened species in captivity.
- Silt fencing should be set up to keep turtles out of construction areas. It is critical that silt fencing be removed after the area has been revegetated.
- Small, vegetated temporary wetlands should not be dredged, deepened, or filled.
- All wetlands should be protected from pollution; use of fertilizers and pesticides should be avoided, and run-off from lawns and streets should be controlled. Erosion should be prevented to keep sediment from reaching wetlands and lakes.
- Roads should be kept to minimum standards on widths and lanes.
- Roads should be ditched, not curbed or below grade. If curbs must be used, 4" high curbs at a 3:1 slope are preferred.
- Culverts under roads crossing wetland areas, between wetland areas, or between wetland and nesting areas should be at least 36 in. diameter and flat-bottomed or elliptical.
- Culverts under roads crossing streams should be oversized (at least twice as wide as the normal width of open water) and flat-bottomed or elliptical.
- Utility access and maintenance roads should be kept to a minimum.
- Below-ground utility construction sites should be returned to original grade.
- Terrain should be left with as much natural contour as possible.
- Graded areas should be revegetated with native grasses and forbs.
- Vegetation management in infrequently mowed areas -- such as in ditches, along utility access roads, and under power lines -- should be done mechanically (chemicals should not be used). Work should occur fall through spring (after October 1st and before June 1st).

Compiled by the Minnesota Department of Natural Resources Natural Heritage and Nongame Research Program, August, 2001
Endangered Species Environmental Review Coordinator, 500 Lafayette Rd., Box 25, St. Paul, MN 55155 / 651-296-7863

Environmental Review Fact Sheet Series

Endangered, Threatened, and Special Concern Species of Minnesota

Blanding's Turtle
(*Emydoidea blandingii*)

Minnesota Status:	Threatened	State Rank[1]:	S2
Federal Status:	none	Global Rank[1]:	G4

HABITAT USE

Blanding's turtles need both wetland and upland habitats to complete their life cycle. The types of wetlands used include ponds, marshes, shrub swamps, bogs, and ditches and streams with slow-moving water. In Minnesota, Blanding's turtles are primarily marsh and pond inhabitants. Calm, shallow water bodies (Type 1-3 wetlands) with mud bottoms and abundant aquatic vegetation (cattails, water lilies, etc.) are preferred, and extensive marshes bordering rivers provide excellent habitat. Small temporary wetlands (those that dry up in the late summer or fall) are frequently used in spring and summer -- these fishless pools are amphibian and invertebrate breeding habitat, which provides an important food source for Blanding's turtles. Also, the warmer water of these shallower areas probably aids in the development of eggs within the female turtle. Nesting occurs in open (grassy or brushy) sandy uplands, often some distance from water bodies. Frequently, nesting occurs in traditional nesting grounds on undeveloped land. Blanding's turtles have also been known to nest successfully on residential property (especially in low density housing situations), and to utilize disturbed areas such as farm fields, gardens, under power lines, and road shoulders (especially of dirt roads). Although Blanding's turtles may travel through woodlots during their seasonal movements, shady areas (including forests and lawns with shade trees) are not used for nesting. Wetlands with deeper water are needed in times of drought, and during the winter. Blanding's turtles overwinter in the muddy bottoms of deeper marshes and ponds, or other water bodies where they are protected from freezing.

LIFE HISTORY

Individuals emerge from overwintering and begin basking in late March or early April on warm, sunny days. The increase in body temperature which occurs during basking is necessary for egg development within the female turtle. Nesting in Minnesota typically occurs during June, and females are most active in late afternoon and at dusk. Nesting can occur as much as a mile from wetlands. The nest is dug by the female in an open sandy area and 6-15 eggs are laid. The female turtle returns to the marsh within 24 hours of laying eggs. After a development period of approximately two months, hatchlings leave the nest from mid-August through early-October. Nesting females and hatchlings are often at risk of being killed while crossing roads between wetlands and nesting areas. In addition to movements associated with nesting, all ages and both sexes move between wetlands from April through November. These movements peak in June and July and again in September and October as turtles move to and from overwintering sites. In late autumn (typically November), Blanding's turtles bury themselves in the substrate (the mud at the bottom) of deeper wetlands to overwinter.

IMPACTS / THREATS / CAUSES OF DECLINE

- loss of wetland habitat through drainage or flooding (converting wetlands into ponds or lakes)
- loss of upland habitat through development or conversion to agriculture
- human disturbance, including collection for the pet trade* and road kills during seasonal movements
- increase in predator populations (skunks, racoons, etc.) which prey on nests and young

*It is illegal to possess this threatened species.

RECOMMENDATIONS FOR AVOIDING AND MINIMIZING IMPACTS

These recommendations apply to typical construction projects and general land use within Blanding's turtle habitat, and are provided to help local governments, developers, contractors, and homeowners minimize or avoid detrimental impacts to Blanding's turtle populations. **List 1** describes minimum measures which we recommend to prevent harm to Blanding's turtles during construction or other work within Blanding's turtle habitat. **List 2** contains recommendations which offer even greater protection for Blanding's turtles populations; this list should be used *in addition to the first list* in areas which are known to be of state-wide importance to Blanding's turtles (contact the DNR's Natural Heritage and Nongame Research Program if you wish to determine if your project or home is in one of these areas), or in any other area where greater protection for Blanding's turtles is desired.

List 1. Recommendations for all areas inhabited by Blanding's turtles.	**List 2. *Additional* recommendations for areas known to be of state-wide importance to Blanding's turtles.**
GENERAL	
A flyer with an illustration of a Blanding's turtle should be given to all contractors working in the area. Homeowners should also be informed of the presence of Blanding's turtles in the area.	Turtle crossing signs can be installed adjacent to road-crossing areas used by Blanding's turtles to increase public awareness and reduce road kills.
Turtles which are in imminent danger should be moved, by hand, out of harm's way. Turtles which are not in imminent danger should be left undisturbed.	Workers in the area should be aware that Blanding's turtles nest in June, generally after 4pm, and should be advised to minimize disturbance if turtles are seen.
If a Blanding's turtle nests in your yard, do not disturb the nest.	If you would like to provide more protection for a Blanding's turtle nest on your property, see "Protecting Blanding's Turtle Nests" on page 3 of this fact sheet.
Silt fencing should be set up to keep turtles out of construction areas. It is critical that silt fencing be removed after the area has been revegetated.	Construction in potential nesting areas should be limited to the period between September 15 and June 1 (this is the time when activity of adults and hatchlings in upland areas is at a minimum).
WETLANDS	
Small, vegetated temporary wetlands (Types 2 & 3) should not be dredged, deepened, filled, or converted to storm water retention basins (these wetlands provide important habitat during spring and summer).	Shallow portions of wetlands should not be disturbed during prime basking time (mid morning to mid- afternoon in May and June). A wide buffer should be left along the shore to minimize human activity near wetlands (basking Blanding's turtles are more easily disturbed than other turtle species).
Wetlands should be protected from pollution; use of fertilizers and pesticides should be avoided, and run-off from lawns and streets should be controlled. Erosion should be prevented to keep sediment from reaching wetlands and lakes.	Wetlands should be protected from road, lawn, and other chemical run-off by a vegetated buffer strip at least 50' wide. This area should be left unmowed and in a natural condition.
ROADS	
Roads should be kept to minimum standards on widths and lanes (this reduces road kills by slowing traffic and reducing the distance turtles need to cross).	Tunnels should be considered in areas with concentrations of turtle crossings (more than 10 turtles per year per 100 meters of road), and in areas of lower density if the level of road use would make a safe crossing impossible for turtles. Contact your DNR Regional Nongame Specialist for further information on wildlife tunnels.
Roads should be ditched, not curbed or below grade. If curbs must be used, 4 inch high curbs at a 3:1 slope are preferred (Blanding's turtles have great difficulty climbing traditional curbs; curbs and below grade roads trap turtles on the road and can cause road kills).	Roads should be ditched, not curbed or below grade.

ROADS cont.	
Culverts between wetland areas, or between wetland areas and nesting areas, should be 36 inches or greater in diameter, and elliptical or flat-bottomed.	Road placement should avoid separating wetlands from adjacent upland nesting sites, or these roads should be fenced to prevent turtles from attempting to cross them (contact your DNR Nongame Specialist for details).
Wetland crossings should be bridged, or include raised roadways with culverts which are 36 in or greater in diameter and flat-bottomed or elliptical (raised roadways discourage turtles from leaving the wetland to bask on roads).	Road placement should avoid bisecting wetlands, or these roads should be fenced to prevent turtles from attempting to cross them (contact your DNR Nongame Specialist for details). This is especially important for roads with more than 2 lanes.
Culverts under roads crossing streams should be oversized (at least twice as wide as the normal width of open water) and flat-bottomed or elliptical.	Roads crossing streams should be bridged.
UTILITIES	
Utility access and maintenance roads should be kept to a minimum (this reduces road-kill potential).	
Below-ground utility construction sites should be returned to original grade (trenches can trap turtles).	
LANDSCAPING AND VEGETATION MANAGEMENT	
Terrain should be left with as much natural contour as possible.	As much natural landscape as possible should be preserved (installation of sod or wood chips, paving, and planting of trees within nesting habitat can make that habitat unusable to nesting Blanding's turtles).
Graded areas should be revegetated with native grasses and forbs (some non-natives form dense patches through which it is difficult for turtles to travel).	Open space should include some areas at higher elevations for nesting. These areas should be retained in native vegetation, and should be connected to wetlands by a wide corridor of native vegetation.
Vegetation management in infrequently mowed areas -- such as in ditches, along utility access roads, and under power lines -- should be done mechanically (chemicals should not be used). Work should occur fall through spring (after October 1st and before June 1st).	Ditches and utility access roads should not be mowed or managed through use of chemicals. If vegetation management is required, it should be done mechanically, as infrequently as possible, and fall through spring (mowing can kill turtles present during mowing, and makes it easier for predators to locate turtles crossing roads).

Protecting Blanding's Turtle Nests: Most predation on turtle nests occurs within 48 hours after the eggs are laid. After this time, the scent is gone from the nest and it is more difficult for predators to locate the nest. Nests more than a week old probably do not need additional protection, unless they are in a particularly vulnerable spot, such as a yard where pets may disturb the nest. Turtle nests can be protected from predators and other disturbance by covering them with a piece of wire fencing (such as chicken wire), secured to the ground with stakes or rocks. The piece of fencing should measure at least 2 ft. x 2 ft., and should be of medium sized mesh (openings should be about 2 in. x 2 in.). It is ***very important*** that the fencing be **removed <u>before August 1st</u>** so the young turtles can escape from the nest when they hatch!

REFERENCES

[1]Association for Biodiversity Information. "Heritage Status: Global, National, and Subnational Conservation Status Ranks." NatureServe. Version 1.3 (9 April 2001). http://www.natureserve.org/ranking.htm (15 April 2001).

Coffin, B., and L. Pfanmueller. 1988. Minnesota's Endangered Flora and Fauna. University of Minnesota Press, Minneapolis, 473 pp.

REFERENCES cont.

Moriarty, J. J., and M. Linck. 1994. Suggested guidelines for projects occurring in Blanding's turtle habitat. Unpublished report to the Minnesota DNR. 8 pp.

Oldfield, B., and J. J. Moriarty. 1994. Amphibians and Reptiles Native to Minnesota. University of Minnesota Press, Minneapolis, 237 pp.

Sajwaj, T. D., and J. W. Lang. 2000. Thermal ecology of Blanding's turtle in central Minnesota. Chelonian Conservation and Biology 3(4):626-636.

DAKOTA COUNTY TRANSPORTATION DEPARTMENT
SCHEDULE OF BID PRICES

Bidder must fill in unit prices in numerals; make the correct extension for each item and grand total. For complete information concerning these items, see Plans and Specifications, including Special Provisions.

BRIDGE

Item No.	Description	Units	Quantity	Unit Price	Total Price
2401.501	STRUCTURAL CONCRETE (1A43) (P)	CU YD	550		
2401.501	STRUCTURAL CONCRETE (3Y43) (P)	CU YD	894		
2401.512	BRIDGE SLAB CONCRETE (3Y33HP) (P)	SQ FT	18,972		
2401.513	TYPE MOD P-1 (TL-2) RAILING CONCRETE (3Y46) (P)	LIN FT	255		
2401.513	TYPE P-4 (TL-4) RAILING CONCRETE (3Y46) (P)	LIN FT	182		
2401.515	SIDEWALK CONCRETE (3Y36) (P)	SQ FT	1,983		
2401.516	RAISED MEDIAN CONCRETE (3Y36) (P)	SQ FT	2,114		
2401.541	REINFORCEMENT BARS (P)	POUND	46,970		
2401.541	REINFORCEMENT BARS (EPOXY COATED) (P)	POUND	228,600		
2401.601	STRUCTURE EXCAVATION	LUMP SUM	1		
2401.618	BRIDGE DECK PLANING (P)	SQ FT	13,058		
2402.583	ORNAMENTAL METAL RAILING TYPE SPECIAL 1 (P)	LIN FT	181		
2402.583	ORNAMENTAL METAL RAILING TYPE SPECIAL 2 (P)	LIN FT	164		
2402.583	ORNAMENTAL METAL RAILING TYPE SPECIAL 3 (P)	LIN FT	60		
2402.591	EXPANSION JOINT DEVICES TYPE 4 (P)	LIN FT	230		
2402.595	BEARING ASSEMBLY (P)	EACH	54		
2405.502	PRESTRESSED CONCRETE BEAMS 36M (P)	LIN FT	2,208		
2405.511	DIAPHRAGMS FOR TYPE 36M PRESTRESSED BEAMS (P)	LIN FT	463		

2411.602	PRECAST CONCRETE CAP (P)	EACH	4		
2411.618	ARCHITECTURAL SURFACE FINISH (SINGLE COLOR) (P)	SQ FT	3,760		
2411.618	ARCHITECTURAL CONCRETE TEXTURE (RANDOM BATTEN) (P)	SQ FT	3,760		
2452.51	STEEL H-PILING DRIVEN 12"	LIN FT	4,055		
2452.511	STEEL H-PILING DELIVERED 12"	LIN FT	4,055		
2452.52	STEEL H-TEST PILE 45 FT LONG 12"	EACH	3		
2452.52	STEEL H-TEST PILE 55 FT LONG 12"	EACH	6		
2502.502	DRAINAGE SYSTEM TYPE (B910)	LUMP SUM	1		
2514.501	CONCRETE SLOPE PAVING (P)	SQ YD	314		
2545.509	CONDUIT SYSTEM (LIGHTING)	LUMP SUM	1		
2545.509	CONDUIT SYSTEM (SIGNALS)	LUMP SUM	1		
2545.509	CONDUIT SYSTEM (FUTURE)	LUMP SUM	1		
2565.602	NMC LOOP DETECTOR 6'X6'	EACH	4		

TOTAL BRIDGE AMOUNT:

ROAD

Item No.	Description	Units	Quantity	Unit Price	Total Price
2011.601	GPS ASBUILT	LUMP SUM	1		
2011.601	VIBRATION MONITORING	LUMP SUM	1		
2021.501	MOBILIZATION	LUMP SUM	1		
2031.501	FIELD OFFICE TYPE D	EACH	1		
2041.61	TRAINEES	HOUR	1,900	$1.00	$1,900.00
2051.501	MAINT AND RESTORATION OF HAUL ROADS	LUMP SUM	1		
2101.501	CLEARING	ACRE	2		
2101.502	CLEARING	TREE	160		
2101.506	GRUBBING	ACRE	2		
2101.507	GRUBBING	TREE	160		
2102.501	PAVEMENT MARKING REMOVAL-PERMANENT	SQ FT	582		
2102.502	PAVEMENT MARKING REMOVAL-PERMANENT	LIN FT	6,955		
2103.501	BUILDING REMOVAL	LUMP SUM	1		
2103.501	BUILDING REMOVAL A	LUMP SUM	1		
2103.501	BUILDING REMOVAL B	LUMP SUM	1		
2103.501	BUILDING REMOVAL C	LUMP SUM	1		
2103.501	BUILDING REMOVAL D	LUMP SUM	1		
2103.501	BUILDING REMOVAL E	LUMP SUM	1		
2103.501	BUILDING REMOVAL F	LUMP SUM	1		
2103.505	DISCONNECT SEWER SERVICE	EACH	7		

2103.507	DISCONNECT WATER SERVICE	EACH	7		
2104.501	REMOVE CONCRETE CULVERT	LIN FT	763		
2104.501	REMOVE METAL CULVERT	LIN FT	182		
2104.501	REMOVE WATER MAIN	LIN FT	3,504		
2104.501	REMOVE SEWER PIPE (SANITARY)	LIN FT	948		
2104.501	REMOVE PIPE SEWERS	LIN FT	5,862		
2104.501	REMOVE CURB AND GUTTER	LIN FT	29,787		
2104.501	REMOVE CONCRETE CURB	LIN FT	350		
2104.501	REMOVE CHAIN LINK FENCE	LIN FT	1,448		
2104.501	REMOVE CABLE GUARD RAIL	LIN FT	350		
2104.501	REMOVE GUARD RAIL-PLATE BEAM	LIN FT	925		
2104.503	REMOVE WOOD RETAINING WALL	SQ FT	500		
2104.503	REMOVE CONCRETE SIDEWALK	SQ FT	7,384		
2104.503	REMOVE CONCRETE NOSE	SQ FT	571		
2104.503	REMOVE CONCRETE MEDIAN	SQ FT	14,128		
2104.505	REMOVE CONCRETE DRIVEWAY PAVEMENT	SQ YD	1,185		
2104.505	REMOVE CONCRETE PAVEMENT	SQ YD	324		
2104.505	REMOVE BITUMINOUS PAVEMENT	SQ YD	142,856		
2104.509	REMOVE CONCRETE APRON	EACH	11		
2104.509	REMOVE ANCHORAGE ASSEMBLY-CABLE	EACH	2		
2104.509	REMOVE ANCHORAGE ASSEMBLY-PLATE BEAM	EACH	3		
2104.509	REMOVE GATE VALVE TOP SECTION	EACH	9		

2104.509	REMOVE MANHOLE OR CATCH BASIN	EACH	91		
2104.509	REMOVE MANHOLE	EACH	7		
2104.509	REMOVE CASTING	EACH	119		
2104.509	REMOVE GATE VALVE & BOX	EACH	25		
2104.509	REMOVE FOUNDATION	EACH	2		
2104.509	REMOVE DELINEATOR	EACH	30		
2104.509	REMOVE MARKER	EACH	3		
2104.509	REMOVE SIGN TYPE A	EACH	1		
2104.509	REMOVE SIGN TYPE C	EACH	103		
2104.509	REMOVE SIGN TYPE D	EACH	10		
2104.509	REMOVE SERVICE INSTALLATION	EACH	1		
2104.509	REMOVE HANDHOLE	EACH	1		
2104.509	REMOVE ECCENTRIC LOADER BCT	EACH	2		
2104.513	SAWING BITUMINOUS PAVEMENT (FULL DEPTH)	LIN FT	11,444		
2104.521	SALVAGE CHAIN LINK FENCE	LIN FT	75		
2104.521	SALVAGE GUARD RAIL	LIN FT	962		
2104.521	SALVAGE GUARD RAIL-PLATE BEAM	LIN FT	225		
2104.523	SALVAGE HYDRANT	EACH	16		
2104.523	SALVAGE ENERGY ABSORBING TERMINAL	EACH	1		
2104.523	SALVAGE VEHICULAR GATE	EACH	1		
2104.523	SALVAGE FIBER OPTIC VAULT	EACH	1		
2104.523	SALVAGE CABINET	EACH	1		

2104.523	SALVAGE SERVICE CABINET	EACH	1		
2104.523	SALVAGE DMS	EACH	1		
2104.523	SALVAGE SIGN TYPE C	EACH	4		
2104.601	REMOVE CABLES	LUMP SUM	1		
2104.601	HAUL SALVAGED MATERIAL	LUMP SUM	1		
2104.603	ABANDON PIPE	LIN FT	1,870		
2104.618	SALVAGE CONCRETE BLOCK RETAINING WALL	SQ FT	725		
2105.601	DEWATERING	LUMP SUM	1		
2105.603	TRENCH MAINTENANCE	LIN FT	4,588		
2105.607	EXCAVATION SPECIAL	CU YD	28,958		
2105.607	HAUL & DISPOSE OF CONTAMINATED MATERIAL	CU YD	28,958		
2106.605	SUBSOILING	ACRE	24		
2106.607	EXCAVATION - COMMON (P)	CU YD	272,491		
2106.607	EXCAVATION - SUBGRADE	CU YD	147,515		
2106.607	EXCAVATION - MUCK	CU YD	5,813		
2106.607	COMMON EMBANKMENT (CV)	CU YD	54,994		
2106.607	GRANULAR EMBANKMENT (CV)	CU YD	97,619		
2106.607	SELECT GRANULAR EMBANKMENT (CV)	CU YD	66,549		
2106.607	SELECT GRANULAR EMBANKMENT MODIFIED 10% (CV) (P)	CU YD	27,597		
2112.501	SUBGRADE PREPARATION	ROAD STA	27		
2123.601	EQUIPMENT RENTAL	LUMP SUM	1	$17,500	$17,500.00
2130.501	WATER	M GALLONS	200		

2131.502	CALCIUM CHLORIDE SOLUTION	GALLON	2,000		
2211.503	AGGREGATE BASE (CV) CLASS 6 (P)	CU YD	19,355		
2221.503	AGGREGATE SHOULDERING (CV) CLASS 2 (P)	CU YD	825		
2221.503	AGGREGATE SHOULDERING (CV) CLASS 3 (P)	CU YD	3,769		
2231.501	BITUMINOUS PATCHING MIXTURE	TON	15		
2301.553	BRIDGE APPROACH PANELS	SQ YD	747		
2301.602	1.25" DOWEL BAR (STAINLESS STEEL)	EACH	11,271		
2301.602	1.5" DOWEL BAR (STAINLESS STEEL)	EACH	22,573		
2301.604	CONCRETE PAVEMENT 7.0"	SQ YD	9,265		
2301.604	CONCRETE PAVEMENT 8.5"	SQ YD	7,857		
2301.604	CONCRETE PAVEMENT 11.0"	SQ YD	53,606		
2301.608	SUPPLEMENTAL PAVEMENT REINFORCEMENT (EPOXY COATED)	POUND	34,675		
2360.501	TYPE SP 12.5 WEARING COURSE MIXTURE (3,C)	TON	6,290		
2360.501	TYPE SP 12.5 WEARING COURSE MIXTURE (5,F)	TON	10,820		
2360.502	TYPE SP 12.5 NON WEARING COURSE MIXTURE (4,B)	TON	3,854		
2401.513	TYPE P-1 (TL-2) RAILING CONCRETE (3Y46A)	LIN FT	3,991		
2402.583	ORNAMENTAL METAL RAILING	LIN FT	1,376		
2402.585	PIPE RAILING	LIN FT	10		
2411.501	STRUCTURAL CONCRETE (1A43) (P)	CU YD	2,857		
2411.501	STRUCTURAL CONCRETE (3Y43) (P)	CU YD	4,356		
2411.511	STRUCTURE EXCAVATION CLASS U (P)	CU YD	73,754		
2411.541	REINFORCEMENT BARS (P)	POUND	213,716		

2411.541	REINFORCEMENT BARS (EPOXY COATED) (P)	POUND	570,805		
2411.603	CONCRETE STEPS-DESIGN SPECIAL	LIN FT	3		
2411.604	RECONSTRUCT RETAINING WALL	SQ YD	80		
2411.604	CONC RETAINING WALL (SPECIAL)	SQ YD	1,433		
2411.618	MODULAR GRAVITY BLOCK RETAINING WALL	SQ FT	1,584		
2411.618	ARCHITECTURAL SURFACE FINISH (SINGLE COLOR) (P)	SQ FT	95,501		
2411.618	ARCHITECTURAL CONCRETE TEXTURE (RANDOM BATTEN) (P)	SQ FT	54,579		
2412.511	8X6 PRECAST CONCRETE BOX CULVERT	LIN FT	875		
2412.512	8X6 PRECAST CONCRETE BOX CULVERT END SECTION	EACH	1		
2422.603	CONCRETE POSTS 12"X12" (P)	LIN FT	1,062		
2422.603	CONCRETE POSTS 12"X18" (P)	LIN FT	5,142		
2422.618	WOOD NOISE BARRIER (P)	SQ FT	34,347		
2451.507	GRANULAR BEDDING (CV)	CU YD	82		
2451.511	COARSE FILTER AGGREGATE (CV)	CU YD	89		
2501.511	12" CP PIPE CULVERT (SMOOTH)	LIN FT	200		
2501.511	18" CP PIPE CULVERT (SMOOTH)	LIN FT	200		
2501.511	18" CS PIPE CULVERT	LIN FT	4		
2501.515	18" GS PIPE APRON	EACH	1		
2501.515	48" GS PIPE APRON	EACH	1		
2501.515	12" RC PIPE APRON	EACH	2		
2501.515	15" RC PIPE APRON	EACH	4		
2501.515	18" RC PIPE APRON	EACH	1		

2501.567	18" CS SAFETY APRON & GRATE DESIGN 3128	EACH	2		
2502.501	4" PRECAST CONCRETE HEADWALL	EACH	6		
2502.501	6" PRECAST CONCRETE HEADWALL	EACH	1		
2502.521	4" TP PIPE DRAIN	LIN FT	95		
2502.521	6" TP PIPE DRAIN	LIN FT	50		
2502.541	4" PERF TP PIPE DRAIN	LIN FT	4,119		
2502.541	6" PERF PE PIPE DRAIN	LIN FT	750		
2503.511	12" CP PIPE SEWER (SMOOTH)	LIN FT	30		
2503.511	18" CP PIPE SEWER (SMOOTH)	LIN FT	168		
2503.511	48" CP PIPE SEWER (SMOOTH)	LIN FT	110		
2503.511	6" PVC PIPE SEWER	LIN FT	50		
2503.511	8" PVC PIPE SEWER	LIN FT	406		
2503.511	8" DUCTILE IRON PIPE SEWER	LIN FT	130		
2503.511	10" DUCTILE IRON PIPE SEWER	LIN FT	20		
2503.511	12" DUCTILE IRON PIPE SEWER	LIN FT	68		
2503.511	16" DUCTILE IRON PIPE SEWER	LIN FT	831		
2503.521	22" SPAN RC PIPE-ARCH SEWER CLASS IIA	LIN FT	300		
2503.521	28" SPAN RC PIPE-ARCH SEWER CLASS IIA	LIN FT	598		
2503.521	36" SPAN RC PIPE-ARCH SEWER CLASS IIA	LIN FT	59		
2503.521	51" SPAN RC PIPE-ARCH SEWER CLASS IIA	LIN FT	108		
2503.521	102" SPAN RC PIPE-ARCH SEWER CLASS IIA	LIN FT	215		
2503.541	12" RC PIPE SEWER DESIGN 3006	LIN FT	790		

2503.541	15" RC PIPE SEWER DESIGN 3006	LIN FT	12,586		
2503.541	15" RC PIPE SEWER DESIGN 3006 CLASS III	LIN FT	436		
2503.541	15" RC PIPE SEWER DESIGN 3006 CLASS IV	LIN FT	71		
2503.541	15" RC PIPE SEWER DESIGN 3006 CLASS V	LIN FT	47		
2503.541	18" RC PIPE SEWER DESIGN 3006	LIN FT	1,408		
2503.541	18" RC PIPE SEWER DESIGN 3006 CLASS III	LIN FT	110		
2503.541	18" RC PIPE SEWER DESIGN 3006 CLASS V	LIN FT	91		
2503.541	21" RC PIPE SEWER DESIGN 3006	LIN FT	517		
2503.541	24" RC PIPE SEWER DESIGN 3006	LIN FT	2,009		
2503.541	24" RC PIPE SEWER DESIGN 3006 CLASS III	LIN FT	114		
2503.541	27" RC PIPE SEWER DESIGN 3006	LIN FT	188		
2503.541	27" RC PIPE SEWER DESIGN 3006 CLASS III	LIN FT	52		
2503.541	27" RC PIPE SEWER DESIGN 3006 CLASS V	LIN FT	115		
2503.541	30" RC PIPE SEWER DESIGN 3006	LIN FT	321		
2503.541	33" RC PIPE SEWER DESIGN 3006	LIN FT	247		
2503.541	33" RC PIPE SEWER DESIGN 3006 CLASS III	LIN FT	219		
2503.541	33" RC PIPE SEWER DESIGN 3006 CLASS V	LIN FT	646		
2503.541	36" RC PIPE SEWER DESIGN 3006 CLASS III	LIN FT	559		
2503.541	48" RC PIPE SEWER DESIGN 3006	LIN FT	28		
2503.541	48" RC PIPE SEWER DESIGN 3006 CLASS III	LIN FT	85		
2503.541	60" RC PIPE SEWER DESIGN 3006 CLASS II	LIN FT	8		
2503.541	66" RC PIPE SEWER DESIGN 3006 CLASS II	LIN FT	4		

2503.541	72" RC PIPE SEWER DESIGN 3006 CLASS II	LIN FT	347		
2503.541	72" RC PIPE SEWER DESIGN 3006 CLASS III	LIN FT	180		
2503.541	72" RC PIPE SEWER DESIGN 3006 CLASS IV	LIN FT	655		
2503.541	78" RC PIPE SEWER DESIGN 3006 CLASS IV	LIN FT	4		
2503.602	CONSTRUCT OUTSIDE DROP	EACH	3		
2503.602	CONNECT TO EXISTING SANITARY SEWER	EACH	10		
2503.602	CONNECT TO EXISTING STORM SEWER	EACH	2		
2503.602	CONNECT TO EXISTING MANHOLES	EACH	5		
2503.602	REPAIR SEWER PIPE	EACH	3		
2503.602	6" PIPE PLUG	EACH	3		
2503.602	8" PIPE PLUG	EACH	1		
2503.602	8"X6" PVC WYE	EACH	1		
2503.602	CHIMNEY SEAL	EACH	2		
2503.602	CHIMNEY SEAL EXTENSION	EACH	2		
2503.602	CONSTRUCT BULKHEAD	EACH	2		
2503.602	AIR RELIEF MANHOLE	EACH	1		
2503.603	27" STEEL CASING PIPE	LIN FT	80		
2503.603	27" STEEL CASING PIPE (JACKED)	LIN FT	124		
2503.603	48" STEEL CASING PIPE	LIN FT	80		
2503.608	DUCTILE IRON FITTINGS	POUND	65		
2504.601	PRESSURE REDUCING STATION (8" PRV)	LUMP SUM	1		
2504.601	PRESSURE REDUCING STATION (16" PRV)	LUMP SUM	1		

2504.601	TEMPORARY WATER SERVICE	LUMP SUM	1		
2504.602	RECONNECT WATER SERVICE	EACH	2		
2504.602	CONNECT TO EXISTING WATER MAIN	EACH	28		
2504.602	HYDRANT	EACH	14		
2504.602	ADJUST HYDRANT	EACH	1		
2504.602	ADJUST GATE VALVE	EACH	13		
2504.602	1.5" CORPORATION STOP	EACH	1		
2504.602	2" CORPORATION STOP	EACH	1		
2504.602	12" BUTTERFLY VALVE AND BOX	EACH	10		
2504.602	16" BUTTERFLY VALVE AND BOX	EACH	3		
2504.602	6" GATE VALVE AND BOX	EACH	20		
2504.602	8" GATE VALVE AND BOX	EACH	8		
2504.602	VALVE OPERATER EXTENSION	EACH	2		
2504.603	1.5" TYPE K COPPER PIPE	LIN FT	30		
2504.603	2" TYPE K COPPER PIPE	LIN FT	12		
2504.603	6" WATERMAIN DUCTILE IRON CL 52	LIN FT	472		
2504.603	8" WATERMAIN DUCTILE IRON CL 52	LIN FT	2,774		
2504.603	12" WATERMAIN DUCTILE IRON CL 52	LIN FT	2,348		
2504.603	16" WATERMAIN DUCTILE IRON CL 52	LIN FT	2,503		
2504.604	4" INSULATION	SQ YD	148		
2504.608	DUCTILE IRON FITTINGS	POUND	11,396		
2506.501	CONSTRUCT DRAINAGE STRUCTURE DESIGN F	LIN FT	118		

2506.501	CONSTRUCT DRAINAGE STRUCTURE DESIGN G	LIN FT	77		
2506.501	CONSTRUCT DRAINAGE STRUCTURE DESIGN H	LIN FT	131		
2506.501	CONSTRUCT DRAINAGE STRUCTURE DESIGN J	LIN FT	29		
2506.501	CONSTRUCT DRAINAGE STRUCTURE DESIGN SD-48	LIN FT	286		
2506.501	CONSTRUCT DRAINAGE STRUCTURE DESIGN SPECIAL	LIN FT	165		
2506.501	CONSTRUCT DRAINAGE STRUCTURE DESIGN SPECIAL 1	LIN FT	123		
2506.501	CONSTRUCT DRAINAGE STRUCTURE DESIGN SPECIAL 14	LIN FT	66		
2506.501	CONSTRUCT DRAINAGE STRUCTURE DESIGN 48-4020	LIN FT	165		
2506.501	CONSTRUCT DRAINAGE STRUCTURE DESIGN 54-4020	LIN FT	141		
2506.501	CONSTRUCT DRAINAGE STRUCTURE DESIGN 60-4020	LIN FT	62		
2506.501	CONSTRUCT DRAINAGE STRUCTURE DESIGN 66-4020	LIN FT	85		
2506.501	CONSTRUCT DRAINAGE STRUCTURE DESIGN 72-4020	LIN FT	36		
2506.501	CONSTRUCT DRAINAGE STRUCTURE DESIGN 78-4020	LIN FT	16		
2506.501	CONSTRUCT DRAINAGE STRUCTURE DESIGN 84-4020	LIN FT	48		
2506.501	CONSTRUCT DRAINAGE STRUCTURE DESIGN 90-4020	LIN FT	20		
2506.501	CONSTRUCT DRAINAGE STRUCTURE DESIGN 96-4020	LIN FT	9		
2506.501	CONSTRUCT DRAINAGE STRUCTURE DESIGN 102-4020	LIN FT	24		
2506.501	CONSTRUCT DRAINAGE STRUCTURE DESIGN 108-4020	LIN FT	5		
2506.501	CONSTRUCT DRAINAGE STRUCTURE DESIGN 120-4020	LIN FT	44		
2506.502	CONSTRUCT DRAINAGE STRUCTURE DESIGN SPECIAL 2	EACH	1		
2506.502	CONSTRUCT DRAINAGE STRUCTURE DESIGN SPECIAL 3	EACH	1		
2506.502	CONSTRUCT DRAINAGE STRUCTURE DESIGN SPECIAL 4	EACH	1		

2506.502	CONSTRUCT DRAINAGE STRUCTURE DESIGN SPECIAL 5	EACH	1		
2506.502	CONSTRUCT DRAINAGE STRUCTURE DESIGN SPECIAL 6	EACH	1		
2506.502	CONSTRUCT DRAINAGE STRUCTURE DESIGN SPECIAL 7	EACH	1		
2506.502	CONSTRUCT DRAINAGE STRUCTURE DESIGN SPECIAL 8	EACH	1		
2506.502	CONSTRUCT DRAINAGE STRUCTURE DESIGN SPECIAL 9	EACH	1		
2506.502	CONSTRUCT DRAINAGE STRUCTURE DESIGN SPECIAL 10	EACH	1		
2506.502	CONSTRUCT DRAINAGE STRUCTURE DESIGN SPECIAL 11	EACH	1		
2506.502	CONSTRUCT DRAINAGE STRUCTURAL DESIGN SPECIAL 12	EACH	1		
2506.502	CONSTRUCT DRAINAGE STRUCTURAL DESIGN SPECIAL 13	EACH	8		
2506.503	RECONSTRUCT DRAINAGE STRUCTURE	LIN FT	87		
2506.516	CASTING ASSEMBLY	EACH	294		
2506.522	ADJUST FRAME & RING CASTING	EACH	10		
2506.602	CONNECT INTO EXISTING DRAINAGE STRUCTURE	EACH	8		
2506.602	CASTING ASSEMBLY SPECIAL	EACH	26		
2506.602	ADJUST FRAME & RING CASTING EXCESS DEPTH	EACH	8		
2511.501	RANDOM RIPRAP CLASS II	CU YD	6		
2511.501	RANDOM RIPRAP CLASS IV	CU YD	32		
2511.515	GEOTEXTILE FILTER TYPE II	SQ YD	19		
2511.515	GEOTEXTILE FILTER TYPE IV	SQ YD	48		
2521.501	4" CONCRETE WALK	SQ FT	85,327		
2521.501	6" CONCRETE WALK	SQ FT	3,323		
2521.511	3" BITUMINOUS WALK	SQ FT	11,277		

2531.501	CONCRETE CURB & GUTTER DESIGN B424	LIN FT	11,617		
2531.501	CONCRETE CURB & GUTTER DESIGN B612	LIN FT	494		
2531.501	CONCRETE CURB & GUTTER DESIGN B618	LIN FT	17,368		
2531.501	CONCRETE CURB & GUTTER DESIGN B624	LIN FT	979		
2531.501	CONCRETE CURB & GUTTER DESIGN D424	LIN FT	6,756		
2531.502	CONCRETE CURB DESIGN B6	LIN FT	310		
2531.507	6" CONCRETE DRIVEWAY PAVEMENT	SQ YD	148		
2531.507	8" CONCRETE DRIVEWAY PAVEMENT	SQ YD	918		
2531.618	TRUNCATED DOMES	SQ FT	262		
2533.506	CONCRETE MEDIAN BARRIER & GLARE SCREEN DESIGN 8309 TYPE A	LIN FT	3,768		
2533.506	CONCRETE MEDIAN BARRIER & GLARE SCREEN DESIGN 8309 TYPE TRAN	LIN FT	72		
2533.507	PORTABLE PRECAST CONCRETE BARRIER DESIGN 8337	LIN FT	10,195		
2533.508	RELOCATE PORTABLE PRECAST CONC BARRIER DESIGN 8337	LIN FT	5,467		
2545.501	ELECTRIC LIGHT SYSTEM	LUMP SUM	1		
2545.501	ELECTRIC LIGHT SYSTEM "A"	LUMP SUM	1		
2550.511	CABINET FOUNDATION	EACH	1		
2550.512	HANDHOLE TYPE-PVC METAL COVER	EACH	1		
2550.514	FIBEROPTIC SPLICE VAULT	EACH	1		
2550.515	OUTDOOR FIBER SPLICE ENCLOSURE	EACH	1		
2550.516	BURIED CABLE SIGN	EACH	25		
2550.523	1.5" NON-METALLIC CONDUIT	LIN FT	8,700		
2550.523	2" NON-METALLIC CONDUIT	LIN FT	100		

2550.532	POWER CABLE 1 CONDUCTOR NO 6	LIN FT	150		
2550.532	POWER CABLE 3 CONDUCTOR NO 8	LIN FT	120		
2550.533	CAT 6 CABLE	LIN FT	120		
2550.571	INSTALL CABINET	EACH	2		
2550.601	TEMPORARY COMMUNICATION SYSTEM	LUMP SUM	1		
2550.601	FIBER OPTIC CABLE TESTING	LUMP SUM	1		
2550.602	FIBER OPTIC PIGTAIL TERMINATION	EACH	3		
2550.602	FIBER OPTIC CABLE SPLICING	EACH	2		
2550.602	INSTALL DMS POST MOUNTED	EACH	1		
2550.602	INSTALL FIBER OPTIC VAULT	EACH	1		
2550.603	ARMORED FIBER OPTIC PIGTAIL CABLE 6SM	LIN FT	2,000		
2550.603	ARMORED FIBER OPTIC PIGTAIL CABLE 12SM	LIN FT	800		
2550.603	REROUTE CABLE	LIN FT	200		
2550.603	FIBER OPTIC TRUNK CABLE 36SM	LIN FT	6,600		
2550.603	1.5" BORED CONDUIT	LIN FT	450		
2550.603	4" BORED CONDUIT	LIN FT	70		
2554.501	TRAFFIC BARRIER DESIGN SPECIAL	LIN FT	100		
2554.501	TRAFFIC BARRIER DESIGN BULLNOSE	LIN FT	94		
2554.501	TRAFFIC BARRIER DESIGN B8338	LIN FT	163		
2554.509	GUIDE POST TYPE B	EACH	10		
2554.511	INSTALL TRAFFIC BARRIER DESIGN B8338	LIN FT	225		
2554.521	ANCHORAGE ASSEMBLY-PLATE BEAM	EACH	5		

2554.523	END TREATMENT-TANGENT TERMINAL	EACH	4		
2554.523	END TREATMENT-FLARED TERMINAL	EACH	1		
2554.602	INSTALL ENERGY ABSORBING TERMINAL	EACH	1		
2554.603	INSTALL GUARDRAIL	LIN FT	962		
2554.615	IMPACT ATTENUATOR	ASSEMBLY	5		
2554.615	RELOCATE IMPACT ATTENUATOR	ASSEMBLY	10		
2557.501	WIRE FENCE DESIGN 32V-9322	LIN FT	753		
2557.501	WIRE FENCE DESIGN 60V-9322	LIN FT	1,510		
2557.522	METAL BRACE ASSEMBLY	EACH	7		
2557.527	ELECTRICAL GROUND	EACH	22		
2557.602	INSTALL VEHICULAR GATE	EACH	1		
2557.603	TEMPORARY GLARE SCREEN	LIN FT	1,342		
2557.603	INSTALL CHAIN LINK FENCE	LIN FT	75		
2557.603	ORNAMENTAL IRON FENCE	LIN FT	105		
2563.601	TRAFFIC CONTROL SUPERVISOR	LUMP SUM	1		
2563.601	TRAFFIC CONTROL	LUMP SUM	1		
2563.601	TEMPORARY PEDESTRIAN ACCESS CONTROL	LUMP SUM	1		
2563.602	RAISED PAVEMENT MARKER TEMPORARY	EACH	1,738		
2563.602	MEDIAN BARRIER DELINEATOR	EACH	514		
2563.613	PORTABLE CHANGEABLE MESSAGE SIGN	UNIT DAY	40		
2564.511	CONCRETE FOOTINGS (TYPE OH SPREAD)	CU YD	24		
2564.522	STRUCTURAL STEEL-POSTS FOR TYPE A SIGNS	POUND	812		

2564.522	STRUCTURAL STEEL-POSTS FOR OH SIGNS (DESIGN B)	POUND	7,802		
2564.522	STRUCTURAL STEEL-TRUSSES FOR OH SIGNS (DESIGN B)	POUND	7,565		
2564.522	STRUCTURAL STEEL-TRUSSES FOR OH SIGNS BRIDGE MOUNTED	POUND	1,360		
2564.522	STRUCTURAL STEEL-PANEL MOUNTING POSTS FOR OH SIGNS (DESIGN B)	POUND	628		
2564.531	SIGN PANELS TYPE C	SQ FT	735		
2564.531	SIGN PANELS TYPE D	SQ FT	313		
2564.531	SIGN PANELS TYPE OVERLAY	SQ FT	64		
2564.531	SIGN PANELS TYPE OH	SQ FT	581		
2564.537	INSTALL SIGN TYPE C	EACH	4		
2564.55	DELINEATOR TYPE X4-6	EACH	30		
2564.551	REFERENCE POST MARKER	EACH	2		
2564.552	HAZARD MARKER X4-2	EACH	18		
2565.511	TRAFFIC CONTROL SIGNAL SYSTEM A	SIG SYS	1		
2565.511	TRAFFIC CONTROL SIGNAL SYSTEM B	SIG SYS	1		
2565.511	TRAFFIC CONTROL SIGNAL SYSTEM C	SIG SYS	1		
2565.601	EMERGENCY VEHICLE PREEMPTION SYSTEM A	LUMP SUM	1		
2565.601	EMERGENCY VEHICLE PREEMPTION SYSTEM B	LUMP SUM	1		
2565.601	EMERGENCY VEHICLE PREEMPTION SYSTEM C	LUMP SUM	1		
2565.601	TRAFFIC CONTROL INTERCONNECTION	LUMP SUM	1		
2565.616	REVISE SIGNAL SYSTEM	SYSTEM	1		
2572.501	TEMPORARY FENCE	LIN FT	5,544		
2572.502	CLEAN ROOT CUTTING	LIN FT	743		

2573.502	SILT FENCE, TYPE HEAVY DUTY	LIN FT	500		
2573.53	STORM DRAIN INLET PROTECTION	EACH	261		
2573.54	FILTER LOG TYPE COMPOST LOG	LIN FT	4,491		
2573.55	EROSION CONTROL SUPERVISOR	LUMP SUM	1		
2575.501	SEEDING	ACRE	25		
2575.502	SEED MIXTURE 150	POUND	160		
2575.502	SEED MIXTURE 250	POUND	1,474		
2575.505	SODDING TYPE SALT RESISTANT	SQ YD	10,643		
2575.511	MULCH MATERIAL TYPE 3	TON	6		
2575.519	DISK ANCHORING	ACRE	3		
2575.523	EROSION CONTROL BLANKETS CATEGORY 3	SQ YD	43,991		
2575.523	EROSION CONTROL BLANKETS CATEGORY 4	SQ YD	3,778		
2575.532	FERTILIZER TYPE 1	POUND	800		
2575.532	FERTILIZER TYPE 3	POUND	8,070		
2575.56	HYDRAULIC SOIL STABILIZER TYPE 5	POUND	10,000		
2575.56	HYDRAULIC SOIL STABILIZER TYPE 8	POUND	36,613		
2580.601	INTERIM PAVEMENT MARKING	LUMP SUM	1		
2581.501	REMOVABLE PREFORMED PLASTIC MARKING	LIN FT	11,782		
2581.603	REMOVABLE PREFORMED PLASTIC MASK (BLACK)	LIN FT	1,090		
2582.501	PAVEMENT MESSAGE (LEFT ARROW) POLY PREFORM	EACH	2		
2582.501	PAVEMENT MESSAGE (LEFT ARROW) POLY PREFORM-GROUND IN	EACH	2		
2582.501	PAVEMENT MESSAGE (RIGHT ARROW) POLY PREFORM-GROUND IN	EACH	3		

2582.501	PAVEMENT MESSAGE (LEFT-THRU ARROW)POLY PREFORM-GROUND IN	EACH	2		
2582.501	PAVEMENT MESSAGE (LT ARROW) EPOXY	EACH	16		
2582.501	PAVEMENT MESSAGE (RT ARROW) EPOXY	EACH	12		
2582.501	PAVEMENT MESSAGE (RIGHT-THRU ARROW) EPOXY	EACH	1		
2582.502	4" SOLID LINE WHITE-PAINT	LIN FT	25,128		
2582.502	8" SOLID LINE WHITE-PAINT	LIN FT	553		
2582.502	4" BROKEN LINE WHITE-PAINT	LIN FT	730		
2582.502	4" SOLID LINE YELLOW-PAINT	LIN FT	8,437		
2582.502	4" BROKEN LINE YELLOW-PAINT	LIN FT	4,158		
2582.502	8" DOTTED LINE YELLOW-PAINT	LIN FT	153		
2582.502	4" DOUBLE SOLID LINE YELLOW-PAINT	LIN FT	17,877		
2582.502	4" SOLID LINE WHITE-POLY PREFORM (GROUND IN)	LIN FT	777		
2582.502	11" SOLID LINE WHITE-POLY PREFORM (GROUND IN)	LIN FT	2,628		
2582.502	24" SOLID LINE WHITE-POLY PREFORM (GROUND IN)	LIN FT	50		
2582.502	7" BROKEN LINE WHITE-POLY PREFORM (GROUND IN)	LIN FT	2,710		
2582.502	4" DOTTED LINE WHITE-POLY PREFORM (GROUND IN)	LIN FT	51		
2582.502	11" DOTTED LINE WHITE-POLY PREFORM (GROUND IN)	LIN FT	633		
2582.502	4" SOLID LINE WHITE-EPOXY	LIN FT	9,417		
2582.502	8" SOLID LINE WHITE-EPOXY	LIN FT	259		
2582.502	4" BROKEN LINE WHITE-EPOXY	LIN FT	880		
2582.502	4" DOTTED LINE WHITE-EPOXY	LIN FT	21		
2582.502	8" DOTTED LINE WHITE-EPOXY	LIN FT	120		

2582.502	4" SOLID LINE YELLOW-EPOXY	LIN FT	4,853		
2582.502	4" DOUBLE SOLID LINE YELLOW-EPOXY	LIN FT	6,237		
2582.502	4" SOLID LINE WHITE-EPOXY (GROUND IN)	LIN FT	17,078		
2582.502	8" SOLID LINE WHITE-EPOXY (GROUND IN)	LIN FT	79		
2582.502	4" SOLID LINE YELLOW-EPOXY (GROUND IN)	LIN FT	16,364		
2582.503	CROSSWALK MARKING-POLY PREFORM	SQ FT	54		
2582.503	CROSSWALK MARKING-EPOXY	SQ FT	1,980		

TOTAL ROAD AMOUNT: _____

GRAND TOTAL BID AMOUNT: _____

BIDDER NAME: _____

State Project No. **019-605-028, 179-020, 1901-148**

GRAND TOTAL $_____

PROPOSAL GUARANTY required by 1208 of the Specifications: "A (certified check) (bond), prepared as required by 1208 of the Specifications and payable to the **Dakota County** Treasurer, in an amount equal to at least 5% of the total amount of the bid is submitted herewith as a proposal guaranty.

DISADVANTAGED BUSINESS ENTERPRISE CERTIFICATION: Our firm will meet a minimum goal of ____% of this contract to Disadvantaged Business Enterprises. A bidder who fails to indicate a specific goal above must fulfill the total goals indicated in the proposal.

NON-COLLUSION AFFIDAVIT: A Non-Collusion Affidavit is found in this proposal which must be signed by each bidder.

RECEIPT OF ADDENDA as required by 1210 of the Specifications:

The undersigned hereby acknowledges receipt of and has considered:

Addendum No. ____ Dated _____ Addendum No. _____ Dated

Addendum No. ____ Dated _____ Addendum No. _____ Dated

Signed

EXECUTION OF PROPOSAL as required by 1206 of the Specifications:

This proposal dated the ____ day of _____, 20

Signed: _____, P.O. Address _____ as an individual.

Signed: _____, P.O. Address _____ as an individual.

doing business under the name and style of

Signed: _____, for _____ a partnership.

NAME BUSINESS ADDRESS

Signed: _____, for _____ a corporation,

incorporated under the laws of the State of Minnesota

Name of President _____ Business Address

Name of Vice-President _____ Business Address

Name of Secretary _____ Business Address

Name of Treasurer _____ Business Address

(NOTE: Signatures shall comply with 1206 of the Specifications.)

MINNESOTA DEPARTMENT OF TRANSPORTATION
COUNTY OF DAKOTA, CITY OF BURNSVILLE

CONSTRUCTION PLAN FOR GRADING, BITUMINOUS AND CONCRETE SURFACING, RETAINING WALLS, NOISE WALLS & ADA IMPROVEMENTS SIGNALS, TMS, SIGNING, LIGHTING, AND BRIDGE NO. 19036

LOCATED ON T.H. 13 FROM 1000' EAST OF WASHBURN AVE. TO THE T.H. 35W BRIDGE IN BURNSVILLE

LOCATED ON CSAH 5 FROM 950' SOUTH OF T.H 13 TO 1400' NORTH OF T.H. 13 IN BURNSVILLE

WARNING:
HIGH PRESSURE PIPELINE(S)
EXCAVATION AND/OR CONSTRUCTION PROHIBITED WITHOUT COMPLIANCE WITH GOPHER STATE ONE-CALL AND WITHOUT WRITTEN PERMISSION FROM
MAGELLAN PIPELINE COMPANY, L.P.

STATE PROJ. NO. 1901-148 (T.H. 13)

GROSS LENGTH	6864.00	FEET	1.300	MILES
BRIDGES-LENGTH	0.00	FEET	0.000	MILES
EXCEPTIONS-LENGTH	0.00	FEET	0.000	MILES
NET LENGTH	6864.00	FEET	1.300	MILES

REF. POINT 94+00.139 TO REF. POINT 96+00.081

NOTE: LENGTH AND DESCRIPTION OF PROJECT IS BASED ON THE T.H. 13 W.B. ALIGNMENT

STATE PROJ. NO. 019-605-028 (CSAH 5)
STATE PROJ. NO. 179-020-031 (CSAH 5)

GROSS LENGTH	2339.00	FEET	0.443	MILES
BRIDGES-LENGTH	165.67	FEET	0.031	MILES
EXCEPTIONS-LENGTH	0.00	FEET	0.000	MILES
NET LENGTH	2339.00	FEET	0.443	MILES

REF. POINT N/A TO REF. POINT N/A

NOTE: LENGTH AND DESCRIPTION OF PROJECT IS BASED ON THE T.H. 5 N.B. ALIGNMENT

AGREEMENT NO. 01483
DAKOTA COUNTY
S.P. 1901-148 (T.H. 13=117)
SP 019-605-028
METRO DISTRICT

(1) DESIGN EXCEPTION:
T.H. 13 E.B. STA. 688+80 TO 691+00 - NEED 14' FROM CENTERLINE OF INSIDE TRAVEL LANE TO SIGHT OBSTRUCTION (BR. PIER). ONLY 13' ACHIEVED.

BEGIN S.P. 1901-148 (T.H. 13)
T.H. 13 W.B. STA. 664+64.00

BEGIN CONSTRUCTION
T.H. 13 E.B. STA. 670+00.00

END S.P. 179-020-031
S.P. 019-605-028
CSAH5 NB STA. 126+39.00

END S.P. 1901-148 (T.H. 13)
T.H. 13 W.B. STA 733+28

INP. BR. NO. 9779

INP. BR. NO. 9780

TH13 E.B. STA. 733+27.00
END CONSTRUCTION

BEGIN S.P. 179-020-031
S.P. 019-605-028
CSAH5 NB STA. 103+00.00

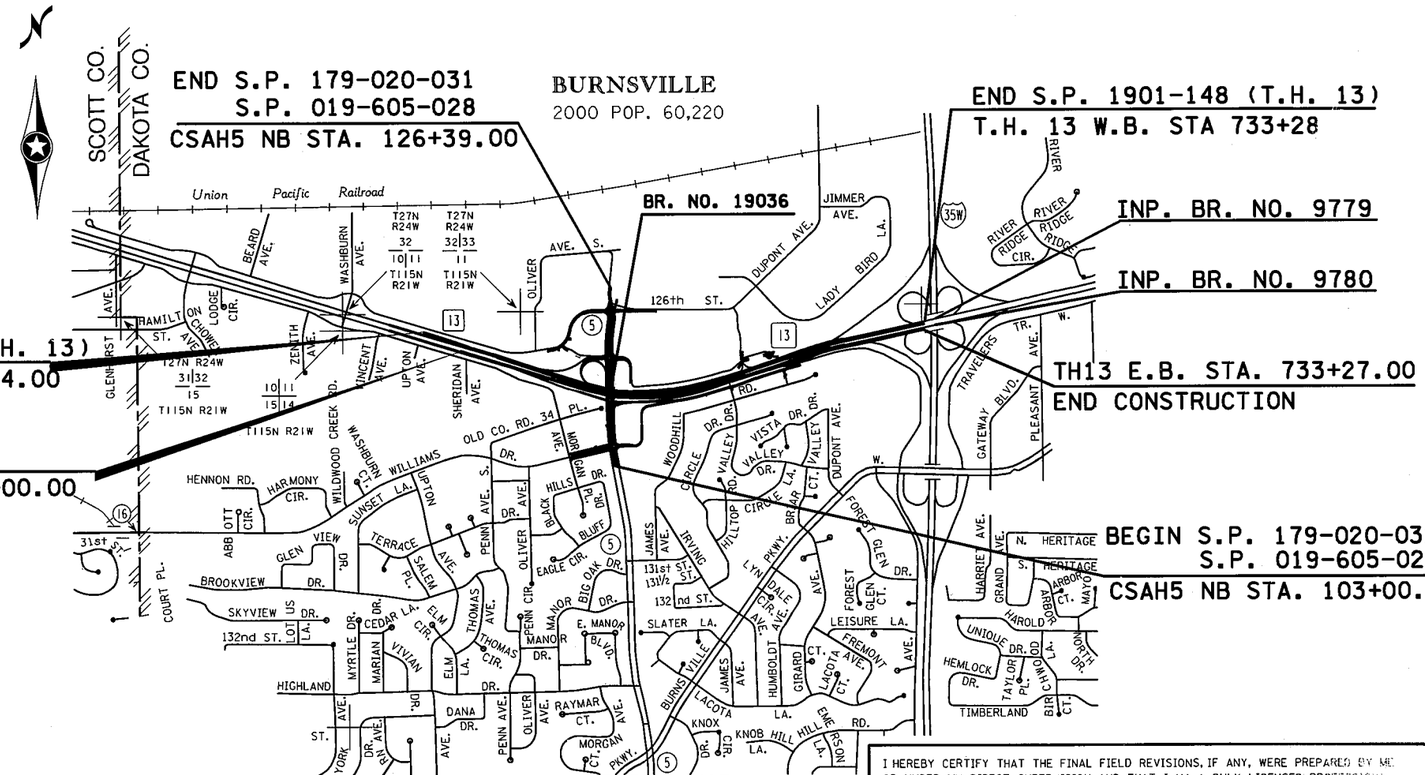

INDEX MAP

PROJECT LOCATION
COUNTY : DAKOTA
DISTRICT : METRO

DESIGN DESIGNATION FOR:	TH 13	C.S.A.H. 5	WILLIAMS DR. MSAS 117	MULTI USE TRAIL
R-VALUE	60	60	40	N/A
ADT (Current Year) 2012 =	62,000	22,800	20,600	N/A
ADT (Future Year) 2032 =	77,000	30,600	23,600	N/A
PAVEMENT DESIGN	10 TONS	10 TONS	10 TONS	N/A
FUNCTIONAL CLASSIFICATION	PRINCIPAL ARTERIAL	A-MINOR ARTERIAL	MINOR ARTERIAL	N/A
NO. OF TRAFFIC LANES	4	4	4	N/A
NO. OF PARKING LANES	0	0	0	N/A
ESALS (20) (FLEXIBLE)	21,313,000	2,622,000	2,176,000	N/A
ESALS (35) (RIGID)	60,607,000	N/A	N/A	N/A
DESIGN SPEED	60 MPH	40 MPH	30 MPH	20 MPH
BASED ON SIGHT DISTANCE	STOPPING (1)	STOPPING	STOPPING	N/A
HEIGHT OF EYE / HEIGHT OF OBJECT	3.5' / 2.0'	3.5' / 2.0'	3.5' / 2.0'	4.5' / 0.0'
DESIGN SPEED NOT ACHIEVED AT:	N/A	N/A	N/A	N/A

I HEREBY CERTIFY THAT THE FINAL FIELD REVISIONS, IF ANY, WERE PREPARED BY ME OR UNDER MY DIRECT SUPERVISION AND THAT I AM A DULY LICENSED PROFESSIONAL ENGINEER UNDER THE LAWS OF THE STATE OF MINNESOTA.

PRINT NAME: _____ LICENSE # _____

DATE: _____ SIGNATURE: _____

SCALES

PLAN	50'		
PROFILE	100' HORIZ.	10' VERT.	
INDEX MAP	1000'		
GENERAL LAYOUT	250'		

FOR PLANS AND UTILITIES SYMBOLS SEE TECHNICAL MANUAL

STATE PROJ. NO. 1901-148
CHARGE IDENTIFIER T91148

PLAN REVISIONS		
DATE	SHEET NO.	APPROVED BY

MINN. PROJ. NO. HPPH-STP09-STP 1912 (258)

GOVERNING SPECIFICATIONS
THE 2005 EDITION OF THE MINNESOTA DEPARTMENT OF TRANSPORTATION "STANDARD SPECIFICATIONS FOR CONSTRUCTION" SHALL GOVERN.

INDEX

SHEET NO.	DESCRIPTION
1	TITLE PAGE
2	GENERAL LAYOUT
3-12	ESTIMATED QUANTITIES
13-14	STANDARD PLATES, SOILS AND CONSTRUCTION NOTES
15-20	EARTHWORK TABULATIONS AND SUMMARY
21-46	TABULATIONS
47-60	INPLACE UTILITY TABULATIONS
61-68	INPLACE UTILITY PLANS
69-89	TYPICAL SECTIONS
90-103	MISCELLANEOUS DETAILS
104-132	STANDARD PLAN SHEETS
133-183	STAGING PLANS
184-189	BYPASS PLAN
190-201	ALIGNMENT PLAN & TABULATIONS
202-209	INPLACE TOPOGRAPHY & REMOVAL PLANS
210-217	CONSTRUCTION PLANS
218-228	CONSTRUCTION DETAILS
229-241	INTERSECTION DETAILS
242-252	PROFILES
253-257	CONCRETE PAVEMENT PLANS
260-265	CONCRETE PAVEMENT DETAILS
266-355	RETAINING WALL PLANS, PROFILES DETAILS, & TABULATIONS
356-367	NOISE WALL PLANS, PROFILES, DETAILS, & TABULATIONS
368-376	DRAINAGE INDEX, SUPERELEVATION & DRAINAGE PLANS SHEETS
377-412	DRAINAGE TABULATIONS AND PROFILES
413-427	DRAINAGE AND BOX CULVERT DETAILS
428-430	SWPPP NARRATIVE
431-442	TURF ESTABLISHMENT & EROSION CONTROL PLANS
U1-U28	BURNSVILLE WATERMAIN & SANITARY SEWER PLANS
TC1-TC84	TRAFFIC CONTROL PLANS
PM1-PM14	PAVEMENT MARKING PLANS
SL1-SL6	LIGHTING PLANS TH13
SLC1-SLC5	LIGHTING PLANS CSAH5
ST1-ST48	SIGNING PLANS
SZ1-SZ23	TRAFFIC MANAGEMENT SYSTEM PLANS
SS1-SS31	SIGNAL PLANS
XI-XI37	CROSS SECTIONS, MATCH LINE LAYOUT & INDEX

SHEETS 258 & 259 HAVE BEEN DELETED

THIS PLAN CONTAINS 816 SHEETS

I HEREBY CERTIFY THAT THIS PLAN WAS PREPARED BY ME OR UNDER MY DIRECT SUPERVISION AND THAT I AM A DULY LICENSED PROFESSIONAL ENGINEER UNDER THE LAWS OF THE STATE OF MINNESOTA.

PRINT NAME: BRAD SKOW LICENSE # 18250

DATE: 6/15/12 SIGNATURE: [signature]

DESIGN SQUAD H. SCHEFFERT, G. JOHNSON, C. TEACHWORTH, M. SCHILLHAMMER

RECOMMENDED FOR APPROVAL [signature] DISTRICT TRANSPORTATION ENGINEER 6/15 20 12

RECOMMENDED FOR APPROVAL [signature] DISTRICT MATERIALS ENGINEER 6/15 20 12

RECOMMENDED FOR APPROVAL [signature] DISTRICT WATER RESOURCES/HYDRAULICS ENGINEER 6/15 20 12

RECOMMENDED FOR APPROVAL [signature] DISTRICT TRAFFIC ENGINEER 6/18 20 12

RECOMMENDED FOR APPROVAL [signature] CITY OF BURNSVILLE 6/18 20 12

RECOMMENDED FOR APPROVAL [signature] DAKOTA COUNTY 8/13 20 12

RECOMMENDED FOR APPROVAL [signature] STATE PRE-LETTING ENGINEER THG

OFFICE OF LAND MANAGEMENT APPROVAL [signature] DIRECTOR, LAND MANAGEMENT 8/16 20 12

APPROVED 8/16 20 12 [signature] STATE DESIGN ENGINEER

[signature] 6/21 20 12
DISTRICT STATE AID ENGINEER: REVIEWED FOR COMPLIANCE WITH STATE AND FEDERAL AID RULES/POLICY

[signature] 6/21 20 12
STATE AID ENGINEER: APPROVAL FOR STATE AID AND FEDERAL AID FUNDING.

STATE PROJ. NO. 019-605-028 STATE PROJ. NO. 179-020-031
STATE PROJ. NO. 1901-148 (T.H. 13= 117)

PLOTTED/REVISED: 13-JUN-2012 13:26
DISTRICT #: METRO
IPLOT NAME: d1901148_1sh
PATH & FILENAME: Projects/DM_ROS/013/1901/148/Design/PlanSheets/title sheets/d1901148_1shdgn

PLOTTED/REVISED: 26-JUL-2012 08:04
DISTRICT #: METRO
IPLOT NAME: d190ll48_glo
PATH & FILENAME: Projects/DM_ROS/013/1901/148/Design/PlanSheets/title sheets/d190ll48_gladgn

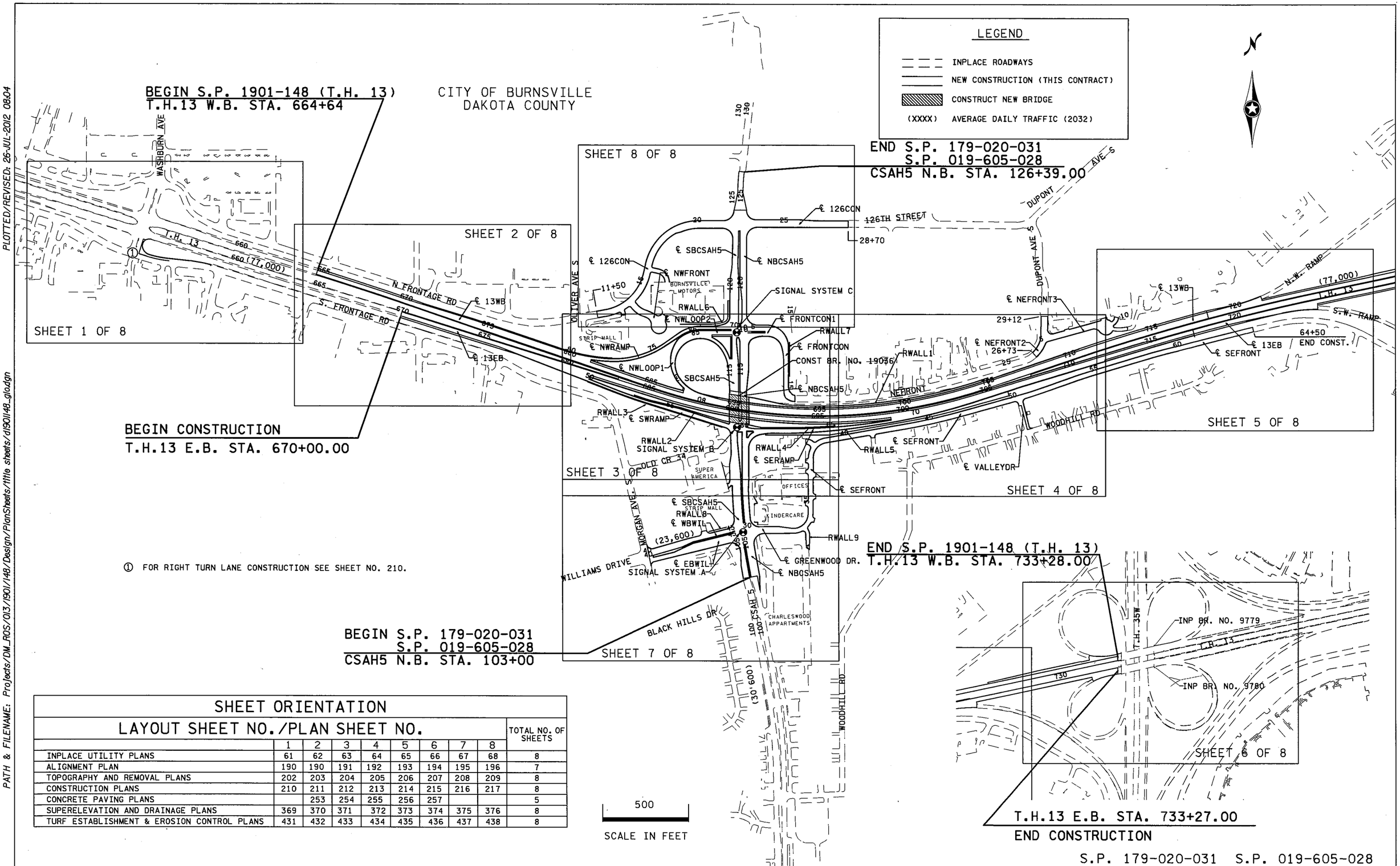

SHEET ORIENTATION									
LAYOUT SHEET NO./PLAN SHEET NO.									TOTAL NO. OF SHEETS
	1	2	3	4	5	6	7	8	
INPLACE UTILITY PLANS	61	62	63	64	65	66	67	68	8
ALIGNMENT PLAN	190	190	191	192	193	194	195	196	7
TOPOGRAPHY AND REMOVAL PLANS	202	203	204	205	206	207	208	209	8
CONSTRUCTION PLANS	210	211	212	213	214	215	216	217	8
CONCRETE PAVING PLANS		253	254	255	256	257			5
SUPERELEVATION AND DRAINAGE PLANS	369	370	371	372	373	374	375	376	8
TURF ESTABLISHMENT & EROSION CONTROL PLANS	431	432	433	434	435	436	437	438	8

GENERAL LAYOUT

DRAWN BY: GLJ | CHECKED BY: HS | CERTIFIED BY _____ LICENSED PROFESSIONAL ENGINEER | LIC. NO. 18520 DATE 7/26/12

STATE PROJ. NO. 1901-148 (T.H. 13) SHEET NO. 2 OF 442 SHEETS

STATEMENT OF ESTIMATED QUANTITIES

TAB.	SHEET NO. NO.	ITEM NO.	DESCRIPTION	UNITS	TOTALS	FEDERAL PARTICIPATING S.P. 1901-148 S.P. 019-605-028 S.P. 179-020-031 INTERCHANGE QUANTITIES	FEDERAL PARTICIPATING S.P. 1901-148 S.P. 019-605-028 S.P. 179-020-031 STORM SEWER INTERCHANGE QUANTITIES	FEDERAL PARTICIPATING S.P. 019-605-028 S.P. 179-020-031 QUANTITIES	FEDERAL NON-PARTICIPATING S.P. 1901-148 100% STATE QUANTITIES	FEDERAL NON-PARTICIPATING LOCAL 100% LOCAL QUANTITIES
SZ	SZ1	2011.601	GPS ASBUILT (1)	LUMP SUM	1	1				
		2011.601	VIBRATION MONITORING (2)	LUMP SUM	1	1				
		2021.501	MOBILIZATION	LUMP SUM	1	0.78	0.06	0.09	0.06	0.01
		2031.501	FIELD OFFICE TYPE D	EACH	1	0.78	0.06	0.09	0.06	0.01
		2041.610	TRAINEES	HOUR	1900	1900				
		2051.501	MAINT AND RESTORATION OF HAUL ROADS	LUMP SUM	1	1				
B	21	2101.501	CLEARING	ACRE	2	2				
B	21	2101.502	CLEARING	TREE	160	160				
B	21	2101.506	GRUBBING	ACRE	2	2				
B	21	2101.507	GRUBBING	TREE	160	160				
TC	TC2	2102.501	PAVEMENT MARKING REMOVAL-PERMANENT	SQ FT	582	246		336		
TC	TC2	2102.502	PAVEMENT MARKING REMOVAL-PERMANENT	LIN FT	6955	5736		273	946	
D	22	2103.501	BUILDING REMOVAL (3)	LUMP SUM	1	1				
D	22	2103.501	BUILDING REMOVAL A (3)	LUMP SUM	1	1				
D	22	2103.501	BUILDING REMOVAL B (3)	LUMP SUM	1	1				
D	22	2103.501	BUILDING REMOVAL C (3)	LUMP SUM	1	1				
D	22	2103.501	BUILDING REMOVAL D (3)	LUMP SUM	1	1				
D	22	2103.501	BUILDING REMOVAL E (3)	LUMP SUM	1	1				
D	22	2103.501	BUILDING REMOVAL F (3)	LUMP SUM	1	1				
U1	U2	2103.505	DISCONNECT SEWER SERVICE	EACH	7			7		
U1	U2	2103.507	DISCONNECT WATER SERVICE	EACH	7			7		
W	41-46	2104.501	REMOVE CONCRETE CULVERT	LIN FT	763	763				
W	41-46	2104.501	REMOVE METAL CULVERT	LIN FT	182	182				
U1	U2	2104.501	REMOVE WATER MAIN	LIN FT	3504			3504		
U1	U2	2104.501	REMOVE SEWER PIPE (SANITARY)	LIN FT	948			948		
W	41-46	2104.501	REMOVE PIPE SEWERS	LIN FT	5862	5852		10		
F,X	24,25,92	2104.501	REMOVE CURB AND GUTTER	LIN FT	29787	26822		2049	916	
X	92	2104.501	REMOVE CONCRETE CURB	LIN FT	350	350				
P	33	2104.501	REMOVE CHAIN LINK FENCE	LIN FT	1448	1448				
R	34	2104.501	REMOVE CABLE GUARDRAIL	LIN FT	350	350				
R	34	2104.501	REMOVE GUARD RAIL-PLATE BEAM	LIN FT	925	675			250	
		2104.503	REMOVE WOOD RETAINING WALL (4)	SQ FT	500	500				
F	24,25	2104.503	REMOVE CONCRETE SIDEWALK	SQ FT	7384	2519		4865		
F	24,25	2104.503	REMOVE CONCRETE NOSE	SQ FT	571				571	
F	24,25	2104.503	REMOVE CONCRETE MEDIAN	SQ FT	14128	13761			367	
F,X	24,25,92	2104.505	REMOVE CONCRETE DRIVEWAY PAVEMENT	SQ YD	1185	1139		46		
F	24,25	2104.505	REMOVE CONCRETE PAVEMENT	SQ YD	324	324				
E,X	23,92	2104.505	REMOVE BITUMINOUS PAVEMENT (5)	SQ YD	142856	120788		4262	17806	
W	41-46	2104.509	REMOVE CONCRETE APRON	EACH	11	11				
R	34	2104.509	REMOVE ANCHORAGE ASSEMBLY-CABLE	EACH	2	2				
R	34	2104.509	REMOVE ANCHORAGE ASSEMBLY-PLATE BEAM	EACH	3	3				
W	41-46	2104.509	REMOVE MANHOLE OR CATCH BASIN	EACH	91	82		4	5	
U1	U2	2104.509	REMOVE MANHOLE (7)	EACH	7			7		
W,U1,U2	46,U2	2104.509	REMOVE CASTING (6)	EACH	119	83		25	6	5

(1) PERTAINS TO ALL TRAFFIC MANAGEMENT SYSTEM QUANTITIES IN PLAN. SEE SPECIAL PROVISIONS.

(2) PROVIDED FOR MONITORING PUBLIC STORAGE, STATE FARM, ALL CARS AND CASSIDY INDUSTRIAL.

(3) SEE SPECIAL PROVISIONS.

(4) CONSISTS OF A SHORT WOOD WALL, RIGHT OF SWRAMP STA. 52+50 TO 55+00.

(5) QUANTITIES INCLUDE THE REMOVAL OF INPLACE 4" DEPTH SHOULDERS. SEE TABULATION ON SHEET NO. 23. FOR OTHER ROADWAY APPROXIMATE DEPTHS, SEE SHEET NO. 23.

(6) INCLUDES 26 SANITARY SEWER CASTINGS.

(7) SANITARY MANHOLE.

STATEMENT OF ESTIMATED QUANTITIES

TAB.	SHEET NO. NO.	ITEM NO.	DESCRIPTION	UNITS	TOTALS	FEDERAL PARTICIPATING S.P. 1901-148 S.P. 019-605-028 S.P. 179-020-031 INTERCHANGE QUANTITIES	FEDERAL PARTICIPATING S.P. 1901-148 S.P. 019-605-028 S.P. 179-020-031 STORM SEWER INTERCHANGE QUANTITIES	FEDERAL PARTICIPATING S.P. 019-605-028 S.P. 179-020-031 QUANTITIES	FEDERAL NON-PARTICIPATING S.P. 1901-148 100% STATE QUANTITIES	FEDERAL NON-PARTICIPATING LOCAL 100% LOCAL QUANTITIES
U1	U2	2104.509	REMOVE GATE VALVE TOP SECTION	EACH	9			9		
U1	U2	2104.509	REMOVE GATE VALVE & BOX	EACH	25			25		
SZ	SZ1	2104.509	REMOVE FOUNDATION	EACH	2	2				
ST	ST1	2104.509	REMOVE DELINEATOR	EACH	30	15			15	
ST	ST1	2104.509	REMOVE MARKER	EACH	3	1			2	
ST	ST1	2104.509	REMOVE SIGN TYPE A	EACH	1				1	
ST	ST1	2104.509	REMOVE SIGN TYPE C	EACH	103	94		7	2	
ST	ST1	2104.509	REMOVE SIGN TYPE D	EACH	10	8			2	
SZ	SZ1	2104.509	REMOVE SERVICE INSTALLATION	EACH	1	1				
SZ	SZ1	2104.509	REMOVE HANDHOLE	EACH	1	1				
R	34	2104.509	REMOVE ECCENTRIC LOADER BCT	EACH	2	1			1	
C,X	22,92	2104.513	SAWING BITUMINOUS PAVEMENT (FULL DEPTH)	LIN FT	11444	9372		263	1809	
X	92	2104.521	SALVAGE CHAIN LINK FENCE	LIN FT	75	75				
R	34	2104.521	SALVAGE GUARD RAIL (1)	LIN FT	962	962				
R	34	2104.521	SALVAGE GUARD RAIL-PLATE BEAM (2)	LIN FT	225	225				
U1	U2	2104.523	SALVAGE HYDRANT	EACH	16			16		
R	34	2104.523	SALVAGE ENERGY ABSORBING TERMINAL (3)	EACH	1	1				
X	92	2104.523	SALVAGE VEHICULAR GATE (4)	EACH	1	1				
SZ	SZ1	2104.523	SALVAGE FIBER OPTIC VAULT	EACH	1	1				
SZ	SZ1	2104.523	SALVAGE CABINET	EACH	1	1				
SZ	SZ1	2104.523	SALVAGE SERVICE CABINET	EACH	1	1				
SZ	SZ1	2104.523	SALVAGE DMS	EACH	1	1				
ST	ST1	2104.523	SALVAGE SIGN TYPE C	EACH	4	2		1	1	
SZ	SZ1	2104.601	REMOVE CABLES	LUMP SUM	1	1				
		2104.601	HAUL SALVAGED MATERIAL	LUMP SUM	1				1	
U1	U2	2104.603	ABANDON PIPE (5)	LIN FT	1870			1870		
X	92	2104.618	SALVAGE CONCRETE BLOCK RETAINING WALL (6)	SQ FT	725	725				
		2105.601	DEWATERING	LUMP SUM	1	1				
U1,U2	U2	2105.603	TRENCH MAINTENANCE	LIN FT	4588			3588		1000
A	20	2105.607	EXCAVATION SPECIAL (7)	CU YD	28958	28958				
A	20	2105.607	HAUL & DISPOSE OF CONTAMINATED MATERIAL (7)	CU YD	28958	28958				
V	38-40	2106.605	SUBSOILING	ACRE	24	21		1	2	
A,L	20,30	2106.607	EXCAVATION - COMMON (P)	CU YD	272491	264670		1644	6177	
A	20	2106.607	EXCAVATION - SUBGRADE	CU YD	147515	122607		2899	22009	
A	20	2106.607	EXCAVATION - MUCK (9)	CU YD	5813	5813				
A	20	2106.607	COMMON EMBANKMENT (CV)	CU YD	54994	53771		574	649	
A	20	2106.607	GRANULAR EMBANKMENT (CV)	CU YD	97619	81119		21	16479	
A	20	2106.607	SELECT GRANULAR EMBANKMENT (CV)	CU YD	66549	58060		2899	5590	
A,AA	20,348	2106.607	SELECT GRANULAR EMBANKMENT MODIFIED 10% (CV) (8) (P)	CU YD	27597	27547		50		
U	37	2112.501	SUBGRADE PREPARATION	ROAD STA	27	27				
U1,U2	U2	2123.601	EQUIPMENT RENTAL	LUMP SUM	1			0.85		0.15
		2130.501	WATER (10)	M GALLON	200	180		20		
		2131.502	CALCIUM CHLORIDE SOLUTION (10)	GALLON	2000	1800		200		
G,L,X	26,30,92	2211.503	AGGREGATE BASE (CV) CLASS 6 (P)	CU YD	19355	16254		968	2133	

(1) INCLUDES THE REMOVAL OF WOOD POSTS.

(2) TO BE RE-INSTALLED ON PROJECT.

(3) CONSISTS OF AN ET-2000.

(4) CONSISTS OF A 30 LIN. FT. ELECTRONIC GATE.

(5) 182 LIN. FT. WATERMAIN AND 45 LIN. FT.SANITARY SEWER PIPE. PIPES TO BE BLOWN FULL OF SAND. (INCIDENTAL).

(6) FOR LOCATION, SEE SHEET NO. 92.

(7) ALL MATERIAL REQUIRED TO BE HAULED OFF PROJECT, BUT NOT ALL REQUIRED TO GO TO A LANDFILL. SEE SPECIAL PROVISIONS.

(8) SHALL MEET THE REQUIREMENTS OF SPEC. 3149.2B2 MODIFIED SO THAT NO MORE THAN 10% IS PASSING THE NO. 200 SIEVE.

(9) FOR DETAILS, SEE SHEET NO. 88.

(10) PROVIDED FOR DUST CONTROL AS DIRECTED BY THE ENGINEER.

PLOTTED/REVISED: 26-JUL-2012 13:49
DISTRICT #: METRO
IPLOT NAME: d190l148_est2
FILENAME: Projects/DM_ROS/013/1901/148/Design/d190l148_est.dgn

STATEMENT OF ESTIMATED QUANTITIES

TAB.	SHEET NO. NO.	ITEM NO.	DESCRIPTION	UNITS	TOTALS	FEDERAL PARTICIPATING S.P. 1901-148 S.P. 019-605-028 S.P. 179-020-031 INTERCHANGE QUANTITIES	FEDERAL PARTICIPATING S.P. 1901-148 S.P. 019-605-028 S.P. 179-020-031 STORM SEWER INTERCHANGE QUANTITIES	FEDERAL PARTICIPATING S.P. 019-065-028 S.P. 179-020-031 QUANTITIES	FEDERAL NON-PARTICIPATING S.P. 1901-148 100% STATE QUANTITIES	FEDERAL NON-PARTICIPATING LOCAL 100% LOCAL QUANTITIES
H	26	2221.503	AGGREGATE SHOULDERING (CV) CLASS 2 (1) (P)	CU YD	825	479			346	
G	26	2221.503	AGGREGATE SHOULDERING (CV) CLASS 3 (P)	CU YD	3769	3757			12	
		2231.501	BITUMINOUS PATCHING MIXTURE (2)	TON	15	10		5		
K	29	2301.553	BRIDGE APPROACH PANELS (3)	SQ YD	747	747				
J	29	2301.602	1.25" DOWEL BAR (STAINLESS STEEL)	EACH	11271	4984			6287	
J	29	2301.602	1.5" DOWEL BAR (STAINLESS STEEL)	EACH	22573	22573				
J	29	2301.604	CONCRETE PAVEMENT 7.0"	SQ YD	9265	6920			2345	
J	29	2301.604	CONCRETE PAVEMENT 8.5"	SQ YD	7857	7857				
J	29	2301.604	CONCRETE PAVEMENT 11.0"	SQ YD	53606	42286			11320	
M	30	2301.608	SUPPLEMENTAL PAVEMENT REINFORCEMENT (EPOXY COATED)	POUND	34675	33527			1148	
I,X	27,28,92	2360.501	TYPE SP 12.5 WEARING COURSE MIXTURE (3,C)	TON	6290	6290				
I	27,28	2360.501	TYPE SP 12.5 WEARING COURSE MIXTURE (5,F)	TON	10820	9904		916		
I	27,28	2360.502	TYPE SP 12.5 NON WEARING COURSE MIXTURE (4,B)	TON	3854	3167		687		
Z	331	2401.513	TYPE P-1 (TL-2) RAILING CONCRETE (3Y46A) (4)	LIN FT	3991	3991				
P	33	2402.583	ORNAMENTAL METAL RAILING (14)	LIN FT	1376	1376				
		2402.585	PIPE RAILING (6)	LIN FT	10	10				
Z,AA	331,348	2411.501	STRUCTURAL CONCRETE (1A43) (P)	CU YD	2857	2834		23		
Z	331	2411.501	STRUCTURAL CONCRETE (3Y43) (P)	CU YD	4356	4356				
A,Y,AA	20,288,348	2411.511	STRUCTURE EXCAVATION CLASS U (P)	CU YD	73754	73545		209		
Z	331	2411.541	REINFORCEMENT BARS (P)	POUND	213716	213716				
Z	331	2411.541	REINFORCEMENT BARS (EPOXY COATED) (P)	POUND	570805	570805				
		2411.603	CONCRETE STEPS-DESIGN SPECIAL (15)	LIN FT	3	3				
X	92	2411.604	RECONSTRUCT RETAINING WALL (16)	SQ YD	80	80				
Y	288	2411.604	CONC RETAINING WALL (SPECIAL)	SQ YD	1433	1433				
AA	348	2411.618	MODULAR GRAVITY BLOCK RETAINING WALL	SQ FT	1584	1180		404		
Y,Z,AA	288,331,348	2411.618	ARCHITECTURAL SURFACE FINISH (SINGLE COLOR) (P)	SQ FT	95501	94676		825		
Y,Z	288,331	2411.618	ARCHITECTURAL CONCRETE TEXTURE (RANDOM BATTEN) (7) (P)	SQ FT	54579	54579				
DD	408-409	2412.511	8X6 PRECAST CONCRETE BOX CULVERT (8)	LIN FT	875			875		
DD	408-409	2412.512	8X6 PRECAST CONCRETE BOX CULVERT END SECTION (9)	EACH	1			1		
CC	363	2422.603	CONCRETE POSTS 12"X12" (10) (P)	LIN FT	1062	1062				
BB	358-360	2422.603	CONCRETE POSTS 12"X18" (P)	LIN FT	5142	5142				
BB,CC	358-360,363	2422.618	WOOD NOISE BARRIER (P)	SQ FT	34347	34347				
GG	419	2451.507	GRANULAR BEDDING (CV)	CU YD	82	52		30		
AA	348	2451.511	COARSE FILTER AGGREGATE (CV)	CU YD	89	68		21		
		2501.511	12" CP PIPE CULVERT (SMOOTH) (11)	LIN FT	200	200				
		2501.511	18" CP PIPE CULVERT (SMOOTH) (11)	LIN FT	200	200				
		2501.511	18" CS PIPE CULVERT (13)	LIN FT	4	4				
		2501.515	18" GS PIPE APRON (13)	EACH	1	1				
DD	408-409	2501.515	48" GS PIPE APRON	EACH	1			1		
DD	408-409	2501.515	12" RC PIPE APRON	EACH	2		2			
DD	408-409	2501.515	15" RC PIPE APRON	EACH	4		4			
DD	408-409	2501.515	18" RC PIPE APRON	EACH	1		1			
FF	412	2501.567	18" CS SAFETY APRON & GRATE DESIGN 3128	EACH	2		2			
Z	331	2502.501	4" PRECAST CONCRETE HEADWALL	EACH	6	6				
Q	33	2502.501	6" PRECAST CONCRETE HEADWALL	EACH	1	1				
Z	331	2502.521	4" TP PIPE DRAIN (12)	LIN FT	95	95				
Q	33	2502.521	6" TP PIPE DRAIN (12)	LIN FT	50	50				
Z	331	2502.541	4" PERF TP PIPE DRAIN (5)	LIN FT	4119	4119				
Q	33	2502.541	6" PERF PE PIPE DRAIN (5)	LIN FT	750	750				

(1) SEE NOTE NUMBER 15 ON SHEET NO. 14.

(2) SHALL MEET THE REQUIREMENTS OF TYPE 12.5 WEARING COURSE MIXTURE (SPWEB340C).

(3) FOR DETAILS, SEE SHEET NO. 261 TO 265.

(4) FOR DETAILS, SEE SHEET NO. 342.

(5) WRAPPED WITH GEOTEXTILE TYPE 1, SPEC. 3733. (INCIDENTAL)

(6) PROVIDED FOR STEPS AT VISTA VIEW APARTMENTS. FOR DETAILS, SEE SHEET NO. 94.

(7) FOR DETAILS, SEE SHEET NO. 344.

(8) FOR DETAILS, SEE SHEET NO. 423.

(9) FOR DETAILS, SEE SHEET NO. 424 TO 427.

(10) PROVIDED FOR NOISE WALL2 ON TOP OF RWALL5. FOR DETAILS, SEE SHEET NO. 364.

(11) PROVIDED FOR USE ON PROJECT FOR TEMPORARY DRAINAGE AT LOCATIONS DIRECTED BY THE ENGINEER.

(12) ALL TEE CONNECTIONS TO PERFORATED PIPE ARE CONSIDERED INCIDENTAL.

(13) FOR LOCATION, SEE SHEET NO. 369.

(14) FOR DETAILS, SEE SHEET NO. 97 AND 98.

(15) FOR DETAILS, SEE SHEET NO. 94. MEASUREMENT BASED ON STAIR TREAD WIDTH.

(16) CONSISTS OF RECONSTRUCTING A STONE WALL SALVAGED ON PROJECT. FOR LOCATION AND DETAILS, SEE SHEET NO. 92.

STATEMENT OF ESTIMATED QUANTITIES

TAB.	SHEET NO. NO.	ITEM NO.	DESCRIPTION	UNITS	TOTALS	FEDERAL PARTICIPATING S.P. 1901-148 S.P. 019-605-028 S.P. 179-020-031 INTERCHANGE QUANTITIES	FEDERAL PARTICIPATING S.P. 1901-148 S.P. 019-605-028 S.P. 179-020-031 STORM SEWER INTERCHANGE QUANTITIES	FEDERAL PARTICIPATING S.P. 019-605-028 S.P. 179-020-031 QUANTITIES	FEDERAL NON-PARTICIPATING S.P. 1901-148 100% STATE QUANTITIES	FEDERAL NON-PARTICIPATING LOCAL 100% LOCAL QUANTITIES
DD	408-409	2503.511	12" CP PIPE SEWER (SMOOTH)	LIN FT	30		30			
FF	412	2503.511	18" CP PIPE SEWER (SMOOTH)	LIN FT	168		168			
DD	408-409	2503.511	48" CP PIPE SEWER (SMOOTH)	LIN FT	110		110			
U1	U2	2503.511	6" PVC PIPE SEWER	LIN FT	50			50		
U1	U2	2503.511	8" PVC PIPE SEWER	LIN FT	406			406		
U1	U2	2503.511	8" DUCTILE IRON PIPE SEWER (2)	LIN FT	130			130		
U1	U2	2503.511	10" DUCTILE IRON PIPE SEWER (2)	LIN FT	20			20		
U1	U2	2503.511	12" DUCTILE IRON PIPE SEWER (2)	LIN FT	68			68		
U1	U2	2503.511	16" DUCTILE IRON PIPE SEWER (2)	LIN FT	831			831		
DD	408-409	2503.521	22" SPAN RC PIPE-ARCH SEWER CLASS IIA	LIN FT	300		300			
DD	408-409	2503.521	28" SPAN RC PIPE-ARCH SEWER CLASS IIA	LIN FT	598		598			
DD	408-409	2503.521	36" SPAN RC PIPE-ARCH SEWER CLASS IIA	LIN FT	59		59			
DD	408-409	2503.521	51" SPAN RC PIPE-ARCH SEWER CLASS IIA	LIN FT	108		108			
DD	408-409	2503.521	102" SPAN RC PIPE-ARCH SEWER CLASS IIA	LIN FT	215			215		
DD	408-409	2503.541	12" RC PIPE SEWER DESIGN 3006	LIN FT	790		488	302		
DD	408-409	2503.541	15" RC PIPE SEWER DESIGN 3006	LIN FT	12586		11189	287	1110	
DD	408-409	2503.541	15" RC PIPE SEWER DESIGN 3006 CLASS III	LIN FT	436		436			
DD	408-409	2503.541	15" RC PIPE SEWER DESIGN 3006 CLASS IV	LIN FT	71		71			
DD	408-409	2503.541	15" RC PIPE SEWER DESIGN 3006 CLASS V	LIN FT	47		47			
DD	408-409	2503.541	18" RC PIPE SEWER DESIGN 3006	LIN FT	1408		1267		141	
DD	408-409	2503.541	18" RC PIPE SEWER DESIGN 3006 CLASS III	LIN FT	110		110			
DD	408-409	2503.541	18" RC PIPE SEWER DESIGN 3006 CLASS V	LIN FT	91		91			
DD	408-409	2503.541	21" RC PIPE SEWER DESIGN 3006	LIN FT	517		517			
DD	408-409	2503.541	24" RC PIPE SEWER DESIGN 3006	LIN FT	2009		2009			
DD	408-409	2503.541	24" RC PIPE SEWER DESIGN 3006 CLASS III	LIN FT	114		114			
DD	408-409	2503.541	27" RC PIPE SEWER DESIGN 3006	LIN FT	188		188			
DD	408-409	2503.541	27" RC PIPE SEWER DESIGN 3006 CLASS III	LIN FT	52		52			
DD	408-409	2503.541	27" RC PIPE SEWER DESIGN 3006 CLASS V	LIN FT	115		115			
DD	408-409	2503.541	30" RC PIPE SEWER DESIGN 3006	LIN FT	321		321			
DD	408-409	2503.541	33" RC PIPE SEWER DESIGN 3006	LIN FT	247		247			
DD	408-409	2503.541	33" RC PIPE SEWER DESIGN 3006 CLASS III	LIN FT	219		219			
DD	408-409	2503.541	33" RC PIPE SEWER DESIGN 3006 CLASS V	LIN FT	646		646			
DD	408-409	2503.541	36" RC PIPE SEWER DESIGN 3006 CLASS III	LIN FT	559		559			
DD	408-409	2503.541	48" RC PIPE SEWER DESIGN 3006	LIN FT	28		28			
DD	408-409	2503.541	48" RC PIPE SEWER DESIGN 3006 CLASS III	LIN FT	85		85			
DD	408-409	2503.541	60" RC PIPE SEWER DESIGN 3006 CLASS II	LIN FT	8		8			
DD	408-409	2503.541	66" RC PIPE SEWER DESIGN 3006 CLASS II	LIN FT	4		4			
DD	408-409	2503.541	72" RC PIPE SEWER DESIGN 3006 CLASS II (1)	LIN FT	347			347		
DD	408-409	2503.541	72" RC PIPE SEWER DESIGN 3006 CLASS III	LIN FT	180			180		
DD	408-409	2503.541	72" RC PIPE SEWER DESIGN 3006 CLASS IV	LIN FT	655			655		
DD	408-409	2503.541	78" RC PIPE SEWER DESIGN 3006 CLASS IV	LIN FT	4		4			
U1	U2	2503.602	CONSTRUCT OUTSIDE DROP (3)	EACH	3			3		
U1	U2	2503.602	CONNECT TO EXISTING SANITARY SEWER	EACH	10			10		
U1	U2	2503.602	CONNECT TO EXISTING MANHOLES (3)	EACH	5			5		
DD	408-409	2503.602	CONNECT TO EXISTING STORM SEWER	EACH	2		2			
W,FF	41-46,412	2503.602	REPAIR SEWER PIPE	EACH	3		3			

(1) INCLUDES 2 VERTICAL AND 12 HORIZONTAL 7°30' LONG RADIUS BENDS.

(2) WITH POLYETHYLENE ENCASEMENT.

(3) SANITARY MANHOLE.

PLOTTED/REVISED: 14-JUN-2012 13:51

DISTRICT *: METRO
IPLOT NAME: d1901148_est4
FILENAME: Projects/DM_ROS/013/1901/148/Design/d1901148_est.dgn

S.P. 179-020-031 S.P. 019-605-028

ESTIMATED QUANTITIES

DRAWN BY: CT | CHECKED BY: HS | CERTIFIED BY _____ LICENSED PROFESSIONAL ENGINEER LIC. NO. 18520 DATE 6/18/12

STATE PROJ. NO. 1901-148 (T.H. 13) SHEET NO. 6 OF 442 SHEETS

STATEMENT OF ESTIMATED QUANTITIES

TAB.	SHEET NO. NO.	ITEM NO.	DESCRIPTION	UNITS	TOTALS	FEDERAL PARTICIPATING S.P. 1901-148 S.P. 019-605-028 S.P. 179-020-031 INTERCHANGE QUANTITIES	FEDERAL PARTICIPATING S.P. 1901-148 S.P. 019-605-028 S.P. 179-020-031 STORM SEWER INTERCHANGE QUANTITIES	FEDERAL PARTICIPATING S.P. 019-605-028 S.P. 179-020-031 QUANTITIES	FEDERAL NON-PARTICIPATING S.P. 1901-148 100% STATE QUANTITIES	FEDERAL NON-PARTICIPATING LOCAL 100% LOCAL QUANTITIES
U1	U2	2503.602	6" PIPE PLUG	EACH	3			3		
U1	U2	2503.602	8" PIPE PLUG	EACH	1			1		
U1	U2	2503.602	8"X6" PVC WYE	EACH	1			1		
U1,U2	U2	2503.602	CHIMNEY SEAL	EACH	2			1		1
U1,U2	U2	2503.602	CHIMNEY SEAL EXTENSION	EACH	2			1		1
U1,DD	U2,408-409	2503.602	CONSTRUCT BULKHEAD (1)	EACH	2			2		
U1	U2	2503.602	AIR RELIEF MANHOLE	EACH	1			1		
U1	U2	2503.603	27" STEEL CASING PIPE	LIN FT	80			80		
U1	U2	2503.603	27" STEEL CASING PIPE (JACKED)	LIN FT	124			124		
DD	408-409	2503.603	48" STEEL CASING PIPE	LIN FT	80		80			
U1	U2	2503.608	DUCTILE IRON FITTINGS	POUND	65			65		
U1	U2	2504.601	TEMPORARY WATER SERVICE (2)	LUMP SUM	1			1		
U2	U2	2504.601	PRESSURE REDUCING STATION (8" PRV)	LUMP SUM	1					1
U1	U2	2504.601	PRESSURE REDUCING STATION (16" PRV)	LUMP SUM	1			1		
U1	U2	2504.602	RECONNECT WATER SERVICE	EACH	2			2		
U1,U2	U2	2504.602	CONNECT TO EXISTING WATER MAIN	EACH	28			26		2
U1	U2	2504.602	ADJUST GATE VALVE	EACH	13			13		
U1	U2	2504.602	1.5" CORPORATION STOP	EACH	1			1		
U1	U2	2504.602	2" CORPORATION STOP	EACH	1			1		
U1,U2	U2	2504.602	6" GATE VALVE AND BOX	EACH	20			18		2
U1,U2	U2	2504.602	8" GATE VALVE AND BOX	EACH	8			3		5
U1	U2	2504.602	12" BUTTERFLY VALVE AND BOX	EACH	10			10		
U1	U2	2504.602	16" BUTTERFLY VALVE AND BOX	EACH	3			3		
U1,U2	U2	2504.602	HYDRANT	EACH	14			12		2
U1	U2	2504.602	ADJUST HYDRANT	EACH	1			1		
U1	U2	2504.602	VALVE OPERATOR EXTENSION	EACH	2			2		
U1	U2	2504.603	1.5" TYPE K COPPER PIPE	LIN FT	30			30		
U1	U2	2504.603	2" TYPE K COPPER PIPE	LIN FT	12			12		
U1,U2	U2	2504.603	6" WATERMAIN DUCTILE IRON CL 52 (3)	LIN FT	472			433		39
U1,U2	U2	2504.603	8" WATERMAIN DUCTILE IRON CL 52 (3)	LIN FT	2774			890		1884
U1	U2	2504.603	12" WATERMAIN DUCTILE IRON CL 52 (3)	LIN FT	2348			2348		
U1,U2	U2	2504.603	16" WATERMAIN DUCTILE IRON CL 52 (3)	LIN FT	2503			2497		6
U2	U2	2504.604	4" INSULATION	SQ YD	148					148
U1,U2	U2	2504.608	DUCTILE IRON FITTINGS	POUND	11396			11272		124
EE,FF	410-412	2506.501	CONSTRUCT DRAINAGE STRUCTURE DESIGN F	LIN FT	118		110	8		
EE	410-411	2506.501	CONSTRUCT DRAINAGE STRUCTURE DESIGN G	LIN FT	77		60		17	
EE,FF	410-412	2506.501	CONSTRUCT DRAINAGE STRUCTURE DESIGN H	LIN FT	131		118		13	
EE,FF	410-412	2506.501	CONSTRUCT DRAINAGE STRUCTURE DESIGN J	LIN FT	29		12	17		
EE	410-411	2506.501	CONSTRUCT DRAINAGE STRUCTURE DESIGN SD-48	LIN FT	286		271		15	
EE	410-411	2506.501	CONSTRUCT DRAINAGE STRUCTURE DESIGN SPECIAL (4)	LIN FT	165		134	31		
EE	410-411	2506.501	CONSTRUCT DRAINAGE STRUCTURE DESIGN SPECIAL 1 (4)	LIN FT	123		115	8		
U1	U2	2506.501	CONSTRUCT DRAINAGE STRUCTURE DESIGN SPECIAL 14 (5)	LIN FT	66			66		

(1) 1 PERMANENT 12" MASONRY BULKHEAD FOR AN 8" PVC AND 1 TEMPORARY 12" MASONRY BULKHEAD IN STRUCTURE NO. 5416 TO BULKHEAD THE 8' X 6' BOX CULVERT.

(2) INCLUDES TEMPORARY WATER PLUMBING AND FIRE SUPPRESSION MANAGEMENT.

(3) WITH POLYETHYLENE ENCASEMENT.

(4) FOR DETAILS, SEE SHEET NO. 420.

(5) SANITARY MANHOLES.

STATEMENT OF ESTIMATED QUANTITIES

TAB.	SHEET NO. NO.	ITEM NO.	DESCRIPTION	UNITS	TOTALS	FEDERAL PARTICIPATING S.P. 1901-148 S.P. 019-605-028 S.P. 179-020-031 INTERCHANGE QUANTITIES	FEDERAL PARTICIPATING S.P. 1901-148 S.P. 019-605-028 S.P. 179-020-031 STORM SEWER INTERCHANGE QUANTITIES	FEDERAL PARTICIPATING S.P. 019-605-028 S.P. 179-020-031 QUANTITIES	FEDERAL NON-PARTICIPATING S.P. 1901-148 100% STATE QUANTITIES	FEDERAL NON-PARTICIPATING LOCAL 100% LOCAL QUANTITIES
EE	410-411	2506.501	CONSTRUCT DRAINAGE STRUCTURE DESIGN 48-4020	LIN FT	165		160		5	
EE	410-411	2506.501	CONSTRUCT DRAINAGE STRUCTURE DESIGN 54-4020	LIN FT	141		141			
EE	410-411	2506.501	CONSTRUCT DRAINAGE STRUCTURE DESIGN 60-4020	LIN FT	62		62			
EE	410-411	2506.501	CONSTRUCT DRAINAGE STRUCTURE DESIGN 66-4020	LIN FT	85		76	9		
EE	410-411	2506.501	CONSTRUCT DRAINAGE STRUCTURE DESIGN 72-4020	LIN FT	36		36			
EE	410-411	2506.501	CONSTRUCT DRAINAGE STRUCTURE DESIGN 78-4020	LIN FT	16		16			
EE	410-411	2506.501	CONSTRUCT DRAINAGE STRUCTURE DESIGN 84-4020	LIN FT	48		48			
EE	410-411	2506.501	CONSTRUCT DRAINAGE STRUCTURE DESIGN 90-4020	LIN FT	20		20			
EE	410-411	2506.501	CONSTRUCT DRAINAGE STRUCTURE DESIGN 96-4020	LIN FT	9		9			
EE	410-411	2506.501	CONSTRUCT DRAINAGE STRUCTURE DESIGN 102-4020	LIN FT	24		7	17		
EE	410-411	2506.501	CONSTRUCT DRAINAGE STRUCTURE DESIGN 108-4020	LIN FT	5		5			
EE	410-411	2506.501	CONSTRUCT DRAINAGE STRUCTURE DESIGN 120-4020	LIN FT	44		21	23		
EE	410-411	2506.502	CONSTRUCT DRAINAGE STRUCTURE DESIGN SPECIAL 2 (5)	EACH	1			1		
EE	410-411	2506.502	CONSTRUCT DRAINAGE STRUCTURE DESIGN SPECIAL 3 (5)	EACH	1			1		
EE	410-411	2506.502	CONSTRUCT DRAINAGE STRUCTURE DESIGN SPECIAL 4 (5)	EACH	1			1		
EE	410-411	2506.502	CONSTRUCT DRAINAGE STRUCTURE DESIGN SPECIAL 5 (4)	EACH	1			1		
EE	410-411	2506.502	CONSTRUCT DRAINAGE STRUCTURE DESIGN SPECIAL 6 (6)	EACH	1			1		
EE	410-411	2506.502	CONSTRUCT DRAINAGE STRUCTURE DESIGN SPECIAL 7 (7)	EACH	1			1		
EE	410-411	2506.502	CONSTRUCT DRAINAGE STRUCTURE DESIGN SPECIAL 8 (4)	EACH	1			1		
EE	410-411	2506.502	CONSTRUCT DRAINAGE STRUCTURE DESIGN SPECIAL 9 (8)	EACH	1			1		
		2506.502	CONSTRUCT DRAINAGE STRUCTURE DESIGN SPECIAL 10 (5)	EACH	1			1		
EE	410-411	2506.502	CONSTRUCT DRAINAGE STRUCTURE DESIGN SPECIAL 11 (3)	EACH	1			1		
EE	410-411	2506.502	CONSTRUCT DRAINAGE STRUCTURE DESIGN SPECIAL 12 (4)	EACH	1			1		
U1	U2	2506.502	CONSTRUCT DRAINAGE STRUCTURE DESIGN SPECIAL 13 (1)	EACH	8			8		
U1	U2	2506.503	RECONSTRUCT DRAINAGE STRUCTURE (1)	LIN FT	87			60		27
EE	410-411	2506.516	CASTING ASSEMBLY (9)	EACH	294		263	16	15	
U1,W	U2,41-46	2506.522	ADJUST FRAME & RING CASTING (2)	EACH	10	8		2		
U1,U2	U2	2506.602	CASTING ASSEMBLY SPECIAL (1)	EACH	26			21		5
U1,U2	U2	2506.602	ADJUST FRAME & RING CASTING EXCESS DEPTH (1)	EACH	8			7		1
DD,FF	408-409,412	2506.602	CONNECT INTO EXISTING DRAINAGE STRUCTURE	EACH	8		6		2	
DD	408-409	2511.501	RANDOM RIPRAP CLASS II	CU YD	6		6			
DD	408-409	2511.501	RANDOM RIPRAP CLASS IV	CU YD	32			32		
DD	408-409	2511.515	GEOTEXTILE FILTER TYPE II	SQ YD	19		19			
DD	408-409	2511.515	GEOTEXTILE FILTER TYPE IV	SQ YD	48			48		
N	31,32	2521.501	4" CONCRETE WALK	SQ FT	85327	74676		10651		
L,N	30-32	2521.501	6" CONCRETE WALK	SQ FT	3323	1818		1278	227	
N	31,32	2521.511	3" BITUMINOUS WALK	SQ FT	11277	1297		9980		
N	31,32	2531.501	CONCRETE CURB & GUTTER DESIGN B424	LIN FT	11617	11617				
N	31,32	2531.501	CONCRETE CURB & GUTTER DESIGN B612	LIN FT	494	334		160		
N,X	31,32,92	2531.501	CONCRETE CURB & GUTTER DESIGN B618	LIN FT	17368	15441		1927		
N	31,32	2531.501	CONCRETE CURB & GUTTER DESIGN B624	LIN FT	979	979				
N	31,32	2531.501	CONCRETE CURB & GUTTER DESIGN D424	LIN FT	6756	5964			792	
X	92	2531.502	CONCRETE CURB DESIGN B6	LIN FT	310	310				

(1) SANITARY MANHOLES.
(2) INCLUDES 2 SANITARY SEWER MANHOLES.
(3) FOR DETAILS, SEE SHEET NO. 414.
(4) FOR DETAILS, SEE SHEET NO. 418.
(5) FOR DETAILS, SEE SHEET NO. 417.
(6) FOR DETAILS, SEE SHEET NO. 415.
(7) FOR DETAILS, SEE SHEET NO. 416.
(8) FOR DETAILS, SEE SHEET NO. 413.
(9) FOR SUMMARY, SEE SHEET NO. 411.

STATEMENT OF ESTIMATED QUANTITIES

TAB.	SHEET NO. NO.	ITEM NO.	DESCRIPTION	UNITS	TOTALS	FEDERAL PARTICIPATING S.P. 1901-148 S.P. 019-605-028 S.P. 179-020-031 INTERCHANGE QUANTITIES	FEDERAL PARTICIPATING S.P. 1901-148 S.P. 019-605-028 S.P. 179-020-031 STORM SEWER INTERCHANGE QUANTITIES	FEDERAL PARTICIPATING S.P. 019-605-028 S.P. 179-020-031 QUANTITIES	FEDERAL NON-PARTICIPATING S.P. 1901-148 100% STATE QUANTITIES	FEDERAL NON-PARTICIPATING LOCAL 100% LOCAL QUANTITIES
N,X	31,32,92	2531.507	6" CONCRETE DRIVEWAY PAVEMENT	SQ YD	148	148				
N	31,32	2531.507	8" CONCRETE DRIVEWAY PAVEMENT	SQ YD	918	827		91		
L	30	2531.618	TRUNCATED DOMES (1)	SQ FT	262	118		144		
O	33	2533.506	CONC MED BAR & GL SCR DES 8309 TYPE A	LIN FT	3768	3768				
O	33	2533.506	CONC MED BAR & GL SCR DES 8309 TYPE TRAN	LIN FT	72	72				
TC	TC2	2533.507	PORTABLE PRECAST CONCRETE BARRIER DESIGN 8337	LIN FT	10195	7715			2480	
TC	TC2	2533.508	RELOCATE PORTABLE PRECAST CONC BARRIER DESIGN 8337	LIN FT	5467	5467				
SL	SL1	2545.501	ELECTRIC LIGHT SYSTEM (8)	LUMP SUM	1	0.83			0.17	
SLC1	SLC1	2545.501	ELECTRIC LIGHT SYSTEM "A" (9)	LUMP SUM	1	1				
SZ	SZ1	2550.511	CABINET FOUNDATION	EACH	1	1				
SZ	SZ1	2550.512	HANDHOLE TYPE-PVC METAL COVER	EACH	1	1				
SZ	SZ1	2550.514	FIBEROPTIC SPLICE VAULT	EACH	1	1				
SZ	SZ1	2550.515	OUTDOOR FIBER SPLICE ENCLOSURE	EACH	1	1				
SZ	SZ1	2550.516	BURIED CABLE SIGN	EACH	25	25				
SZ	SZ1	2550.523	1.5" NON-METALLIC CONDUIT	LIN FT	8700	8700				
SZ	SZ1	2550.523	2" NON-METALLIC CONDUIT	LIN FT	100	100				
SZ	SZ1	2550.532	POWER CABLE 1 CONDUCTOR NO 6	LIN FT	150	150				
SZ	SZ1	2550.532	POWER CABLE 3 CONDUCTOR NO 8	LIN FT	120	120				
SZ	SZ1	2550.533	CAT 6 CABLE	LIN FT	120	120				
SZ	SZ1	2550.571	INSTALL CABINET	EACH	2	2				
SZ	SZ1	2550.601	TEMPORARY COMMUNICATION SYSTEM	LUMP SUM	1	1				
SZ	SZ1	2550.601	FIBER OPTIC CABLE TESTING	LUMP SUM	1	1				
SZ	SZ1	2550.602	FIBER OPTIC PIGTAIL TERMINATION	EACH	3	3				
SZ	SZ1	2550.602	FIBER OPTIC CABLE SPLICING	EACH	2	2				
SZ	SZ1	2550.602	INSTALL DMS POST MOUNTED	EACH	1	1				
SZ	SZ1	2550.602	INSTALL FIBER OPTIC VAULT	EACH	1	1				
SZ	SZ1	2550.603	ARMORED FIBER OPTIC PIGTAIL CABLE 6SM	LIN FT	2000	2000				
SZ	SZ1	2550.603	ARMORED FIBER OPTIC PIGTAIL CABLE 12SM	LIN FT	800	800				
SZ	SZ1	2550.603	REROUTE CABLE	LIN FT	200	200				
SZ	SZ1	2550.603	FIBER OPTIC TRUNK CABLE 36SM	LIN FT	6600	6600				
SZ	SZ1	2550.603	1.5" BORED CONDUIT	LIN FT	450	450				
SZ	SZ1	2550.603	4" BORED CONDUIT	LIN FT	70	70				
R	34	2554.501	TRAFFIC BARRIER DESIGN SPECIAL (2)	LIN FT	100	50			50	
R	34	2554.501	TRAFFIC BARRIER DESIGN BULLNOSE	LIN FT	94				94	
R	34	2554.501	TRAFFIC BARRIER DESIGN B8338	LIN FT	163	38			125	
DD,FF	408-409,412	2554.509	GUIDE POST TYPE B	EACH	10		9	1		
R	34	2554.511	INSTALL TRAFFIC BARRIER DESIGN B8338	LIN FT	225	225				
R	34	2554.521	ANCHORAGE ASSEMBLY-PLATE BEAM	EACH	5	4			1	
R	34	2554.523	END TREATMENT-TANGENT TERMINAL (3)	EACH	4	3			1	
R	34	2554.523	END TREATMENT-FLARED TERMINAL (4)	EACH	1	1				
R	34	2554.602	INSTALL ENERGY ABSORBING TERMINAL (5)	EACH	1	1				
R	34	2554.603	INSTALL GUARDRAIL (6)	LIN FT	962	962				
TC	TC2	2554.615	IMPACT ATTENUATOR (7)	ASSEMBLY	5	5				
TC	TC2	2554.615	RELOCATE IMPACT ATTENUATOR (7)	ASSEMBLY	10	10				

(1) FOR TYPE OF DOMES REQUIRED, SEE TABULATION L ON SHEET NO. 30.

(2) FOR DETAILS, SEE SHEET NO. 126 AND 131.

(3) FOR DETAILS, SEE SHEET NO. 100 AND 101.

(4) FOR DETAILS, SEE SHEET NO. 102 AND 103.

(5) ET-2000.

(6) INCLUDES THE FURNISH AND INSTALL OF STEEL POSTS.

(7) 55 MPH TEMPORARY ATTENUATORS.

(8) PROVIDED FOR T.H. 13.

(9) PROVIDED FOR CSAH 5.

STATEMENT OF ESTIMATED QUANTITIES

TAB.	SHEET NO.	ITEM NO.	DESCRIPTION	UNITS	TOTALS	FEDERAL PARTICIPATING: S.P. 1901-148 S.P. 019-605-028 S.P. 179-020-031 INTERCHANGE QUANTITIES	FEDERAL PARTICIPATING: S.P. 1901-148 S.P. 019-605-028 S.P. 179-020-031 STORM SEWER INTERCHANGE QUANTITIES	FEDERAL PARTICIPATING: S.P. 019-605-028 S.P. 179-020-031 QUANTITIES	FEDERAL NON-PARTICIPATING: S.P. 1901-148 100% STATE QUANTITIES	FEDERAL NON-PARTICIPATING: LOCAL 100% LOCAL QUANTITIES
P	33	2557.501	WIRE FENCE DESIGN 32V-9322	LIN FT	753	753				
P	33	2557.501	WIRE FENCE DESIGN 60V-9322	LIN FT	1510	1510				
P	33	2557.522	METAL BRACE ASSEMBLY	EACH	7	7				
P	33	2557.527	ELECTRICAL GROUND	EACH	22	22				
X	92	2557.602	INSTALL VEHICULAR GATE (1)	EACH	1	1				
TC	TC2	2557.603	TEMPORARY GLARE SCREEN	LIN FT	1342	1342				
X	92	2557.603	INSTALL CHAIN LINK FENCE	LIN FT	75	75				
P	33	2557.603	ORNAMENTAL IRON FENCE (2)	LIN FT	105			105		
		2563.601	TRAFFIC CONTROL SUPERVISOR	LUMP SUM	1	0.78	0.06	0.09	0.06	0.01
		2563.601	TRAFFIC CONTROL	LUMP SUM	1	0.78	0.06	0.09	0.06	0.01
		2563.601	TEMPORARY PEDESTRIAN ACCESS CONTROL	LUMP SUM	1	1				
TC	TC2	2563.602	RAISED PAVEMENT MARKER TEMPORARY (9)	EACH	1738	1406			332	
TC	TC2	2563.602	MEDIAN BARRIER DELINEATOR (8)	EACH	514	514				
TC	TC2	2563.613	PORTABLE CHANGEABLE MESSAGE SIGN	UNIT DAY	40	40				
ST	ST1	2564.511	CONCRETE FOOTINGS (TYPE OH SPREAD)	CU YD	24	12			12	
SZ	SZ1	2564.522	STRUCTURAL STEEL-POSTS FOR TYPE A SIGNS	POUND	812	812				
ST	ST1	2564.522	STRUCTURAL STEEL-POSTS FOR OH SIGNS (DESIGN B)	POUND	7802	3566			4236	
ST	ST1	2564.522	STRUCTURAL STEEL-TRUSSES FOR OH SIGNS (DESIGN B)	POUND	7565	3752			3813	
ST	ST1	2564.522	STRUCTURAL STEEL-TRUSSES FOR OH SIGNS BRIDGE MOUNTED	POUND	1360	1360				
ST	ST1	2564.522	STRUCTURAL STEEL-PANEL MOUNTING POSTS FOR OH SIGNS (DESIGN B)	POUND	628	246			382	
ST	ST1	2564.531	SIGN PANELS TYPE C	SQ FT	735	643		60	32	
ST	ST1	2564.531	SIGN PANELS TYPE D	SQ FT	313	253			60	
ST	ST1	2564.531	SIGN PANELS TYPE OVERLAY	SQ FT	64	52			12	
ST	ST1	2564.531	SIGN PANELS TYPE OH	SQ FT	581	376			205	
ST	ST1	2564.537	INSTALL SIGN TYPE C	EACH	4	2		1	1	
ST	ST1	2564.550	DELINEATOR TYPE X4-6	EACH	30	15			15	
ST	ST1	2564.551	REFERENCE POST MARKER	EACH	2	2				
ST	ST1	2564.552	HAZARD MARKER X4-2	EACH	18	14		2	2	
SS	SS1	2565.511	TRAFFIC CONTROL SIGNAL SYSTEM A (3)	SIG SYS	1	1				
SS	SS1	2565.511	TRAFFIC CONTROL SIGNAL SYSTEM B (3)	SIG SYS	1	1				
SS	SS1	2565.511	TRAFFIC CONTROL SIGNAL SYSTEM C (3)	SIG SYS	1	1				
SS	SS1	2565.601	EMERGENCY VEHICLE PREEMPTION SYSTEM A (3)	LUMP SUM	1	1				
SS	SS1	2565.601	EMERGENCY VEHICLE PREEMPTION SYSTEM B (3)	LUMP SUM	1	1				
SS	SS1	2565.601	EMERGENCY VEHICLE PREEMPTION SYSTEM C (3)	LUMP SUM	1	1				
SS	SS1	2565.601	TRAFFIC CONTROL INTERCONNECTION (3)	LUMP SUM	1	1				
SS	SS1	2565.616	REVISE SIGNAL SYSTEM (3)	SYSTEM	1			1		
P	33	2572.501	TEMPORARY FENCE (4)	LIN FT	5544	4873		671		
B	21	2572.502	CLEAN ROOT CUTTING (5)	LIN FT	743	665		78		
T	37	2573.502	SILT FENCE, TYPE HEAVY DUTY	LIN FT	500	500				
S	35,36	2573.530	STORM DRAIN INLET PROTECTION (6)	EACH	261	233		14	14	
T	37	2573.540	FILTER LOG TYPE COMPOST LOG (7)	LIN FT	4491	4451			40	
		2573.550	EROSION CONTROL SUPERVISOR	LUMP SUM	1	0.8		0.1	0.1	

(1) ELECTRONIC GATE SALVAGED ON PROJECT.

(2) FOR DETAILS, SEE SHEET NO. 97.

(3) SEE TABULATION SS ON SHEET NO. SS1 FOR SIGNAL PARTICIPATION BREAKDOWN.

(4) FLUORESCENT ORANGE.

(5) FOR DETAILS, SEE SHEET NO. 99.

(6) FOR OPTIONS, SEE SHEET NO. 118.

(7) FOR STAKING DETAILS, SEE SHEET NO. 117.

(8) 133 ONE WAY WHITE
273 TWO WAY YELLOW

(9) 555 ONE WAY WHITE
410 ONE WAY YELLOW

STATEMENT OF ESTIMATED QUANTITIES

TAB.	SHEET NO.	ITEM NO.	DESCRIPTION	UNITS	TOTALS	FEDERAL PARTICIPATING: S.P. 1901-148 S.P. 019-605-028 S.P. 179-020-031 INTERCHANGE QUANTITIES	FEDERAL PARTICIPATING: S.P. 1901-148 S.P. 019-605-028 S.P. 179-020-031 STORM SEWER INTERCHANGE QUANTITIES	FEDERAL PARTICIPATING: S.P. 019-605-028 S.P. 179-020-031 QUANTITIES	FEDERAL NON-PARTICIPATING: S.P. 1901-148 100% STATE QUANTITIES	FEDERAL NON-PARTICIPATING: LOCAL 100% LOCAL QUANTITIES
T,V	37-40	2575.501	SEEDING	ACRE	25	23			2	
T	37	2575.502	SEED MIXTURE 150 (1)	POUND	160	160				
V	38-40	2575.502	SEED MIXTURE 250	POUND	1474	1333			141	
V	38-40	2575.505	SODDING TYPE SALT RESISTANT	SQ YD	10643	9400		1243		
V	38-40	2575.511	MULCH MATERIAL TYPE 3	TON	6	6				
V	38-40	2575.519	DISK ANCHORING	ACRE	3	3				
T,V	37-40	2575.523	EROSION CONTROL BLANKETS CATEGORY 3 (2)(5)	SQ YD	43991	42009			1982	
T	37	2575.523	EROSION CONTROL BLANKETS CATEGORY 4 (5)	SQ YD	3778	3778				
T	37	2575.532	FERTILIZER TYPE 1 (3)	POUND	800	800				
V	38-40	2575.532	FERTILIZER TYPE 3 (4)	POUND	8070	7279		90	701	
T	37	2575.560	HYDRAULIC SOIL STABILIZER TYPE 5	POUND	10000	8000			2000	
V	38-40	2575.560	HYDRAULIC SOIL STABILIZER TYPE 8	POUND	36613	31044			5569	
TC	TC2	2580.601	INTERIM PAVEMENT MARKING	LUMP SUM	1			1		
TC	TC2	2581.501	REMOVABLE PREFORMED PLASTIC MARKING	LIN FT	11782	11782				
TC	TC2	2581.603	REMOVABLE PREFORMED PLASTIC MASK (BLACK)	LIN FT	1090	820			270	
PM	PM1	2582.501	PAVEMENT MESSAGE (LEFT ARROW) POLY PREFORM	EACH	2	2				
PM	PM1	2582.501	PAVEMENT MESSAGE (LEFT ARROW) POLY PREFORM-GROUND IN	EACH	2	2				
PM	PM1	2582.501	PAVEMENT MESSAGE (RIGHT ARROW) POLY PREFORM-GROUND IN	EACH	3	3				
PM	PM1	2582.501	PAVEMENT MESSAGE (LEFT-THRU ARROW)POLY PREFORM-GROUND IN	EACH	2	2				
PM	PM1	2582.501	PAVEMENT MESSAGE (LT ARROW) EPOXY	EACH	16	11		5		
PM	PM1	2582.501	PAVEMENT MESSAGE (RT ARROW) EPOXY	EACH	12	10		2		
PM	PM1	2582.501	PAVEMENT MESSAGE (RIGHT-THRU ARROW) EPOXY	EACH	1	1				
TC	TC2	2582.502	4" SOLID LINE WHITE-PAINT	LIN FT	25128	21080		152	3896	
TC	TC2	2582.502	8" SOLID LINE WHITE-PAINT	LIN FT	553	553				
TC	TC2	2582.502	4" BROKEN LINE WHITE-PAINT	LIN FT	730	730				
TC	TC2	2582.502	4" SOLID LINE YELLOW-PAINT	LIN FT	8437	8437				
TC	TC2	2582.502	4" BROKEN LINE YELLOW-PAINT	LIN FT	4158	1680			2478	
TC	TC2	2582.502	8" DOTTED LINE YELLOW-PAINT	LIN FT	153	153				
TC	TC2	2582.502	4" DOUBLE SOLID LINE YELLOW-PAINT	LIN FT	17877	13471		1372	3034	
PM	PM1	2582.502	4" SOLID LINE WHITE-POLY PREFORM (GROUND IN)	LIN FT	777	777				
PM	PM1	2582.502	11" SOLID LINE WHITE-POLY PREFORM (GROUND IN)	LIN FT	2628	1832			796	
PM	PM1	2582.502	24" SOLID LINE WHITE-POLY PREFORM (GROUND IN)	LIN FT	50	50				
PM	PM1	2582.502	7" BROKEN LINE WHITE-POLY PREFORM (GROUND IN)	LIN FT	2710	2090			620	
PM	PM1	2582.502	4" DOTTED LINE WHITE-POLY PREFORM (GROUND IN)	LIN FT	51	51				
PM	PM1	2582.502	11" DOTTED LINE WHITE-POLY PREFORM (GROUND IN)	LIN FT	633	597			36	
PM	PM1	2582.502	4" SOLID LINE WHITE-EPOXY	LIN FT	9417	7402		2015		
PM	PM1	2582.502	8" SOLID LINE WHITE-EPOXY	LIN FT	259	259				
PM	PM1	2582.502	4" BROKEN LINE WHITE-EPOXY	LIN FT	880	710		170		
PM	PM1	2582.502	4" DOTTED LINE WHITE-EPOXY	LIN FT	21	18		3		
PM	PM1	2582.502	8" DOTTED LINE WHITE-EPOXY	LIN FT	120	120				
PM	PM1	2582.502	4" SOLID LINE YELLOW-EPOXY	LIN FT	4853	3876		977		
PM	PM1	2582.502	4" DOUBLE SOLID LINE YELLOW-EPOXY	LIN FT	6237	6237				
PM	PM1	2582.502	4" SOLID LINE WHITE-EPOXY (GROUND IN)	LIN FT	17078	14002			3076	
PM	PM1	2582.502	8" SOLID LINE WHITE-EPOXY (GROUND IN)	LIN FT	79	79				
PM	PM1	2582.502	4" SOLID LINE YELLOW-EPOXY (GROUND IN)	LIN FT	16364	13282			3082	
PM	PM1	2582.503	CROSSWALK MARKING-POLY PREFORM	SQ FT	54	54				
PM	PM1	2582.503	CROSSWALK MARKING-EPOXY	SQ FT	1980	1476		504		

(1) HYDRO BROADCAST AT RATE OF 40 LBS/ACRE.

(2) INCLUDES 8322 SQ. YD. OF WOOD FIBER ONLY FOR TEMPORARY EROSION CONTROL AS SHOWN IN TABULATION T ON SHEET NO. 37.

(3) ANALYSIS 10-20-20.

(4) ANALYSIS 22-5-10.

(5) FOR STAPLING PATTERN, SEE SHEET NO. 442.

NOTE: FOR TURF ESTABLISHMENT APPLICATION RATES, SEE TURF ESTABLISHMENT TABULATION ON SHEET NO. 37 TO 40.

S.E.Q. TABULATION INDEX

SHEET NO.	TAB	TABULATION
20	A	EARTHWORK SUMMARY
21	B	CLEARING AND GRUBBING
22	C	SAWCUTS
22	D	BUILDING REMOVAL
23	E	BITUMINOUS PAVEMENT REMOVALS
24,25	F	MISCELLANEOUS CONCRETE REMOVALS
26	G	AGGREGATE BASE
26	H	AGGREGATE SHOULDERING
27,28	I	BITUMINOUS
29	J	CONCRETE PAVEMENT, DOWEL BARS
29	K	BRIDGE APPROACH PANELS
30	L	PEDESTRIAN RAMPS
30	M	SUPPLEMENTAL PAVEMENT REINFORCEMET
31,32	N	CURB & GUTTER & WALK
33	O	CONCRETE MEDIAN BARRIER & GLARE SCREEN
33	P	FENCING
33	Q	SUBSURFACE DRAINAGE
34	R	TRAFFIC BARRIER
35,36	S	STORM DRAIN INLET PROTECTION
37	T	TEMPORARY EROSION CONTROL
37	U	SUBGRADE PREPARATION
38-40	V	TURF ESTABLISHMENT
41-46	W	MISCELLANEOUS DRAINAGE ITEMS
92	X	MISCELLANEOUS DRIVEWAY ITEMS
288	Y	RWALL 3 QUANTITIES
331	Z	SUMMARY OF RETAINING WALL QUANTITIES
348	AA	MODULAR GRAVITY BLOCK WALLS
358-360	BB	NOISE WALL NO. 1
363	CC	NOISE WALL NO. 2
408-409	DD	STORM SEWER SUMMARY
410-411	EE	DRAINAGE STRUCTURE SUMMARY
412	FF	TEMPORARY DRAINAGE
419	GG	GRANULAR BEDDING
U2	U1	BURNSVILLE WATERMAIN AND SANITARY SEWER - FEDERAL PARTICIPATING
U2	U2	BURNSVILLE WATERMAIN AND SANITARY SEWER - 100% LOCAL QUANTITIES
TC2	TC	TRAFFIC CONTROL
PM1	PM	PAVEMENT MARKING
SL1	SL	LIGHTING - T.H. 13
SLC1	SL	LIGHTING - CSAH 5
ST1	ST	SIGNING
SZ1	SZ	TRAFFIC MANAGEMENT SYSTEM
SS1	SS	SIGNALS

PLOTTED/REVISED: 06-AUG-2012 07:20

DISTRICT #: METRO
IPLOT NAME: d1901148_tseqIndex
FILENAME: Projects/DM_ROS/013/1901/148/Design/PlanSheets/Tabulations/d1901148_tb.dgn

THE FOLLOWING STANDARD PLATES, APPROVED BY THE FEDERAL HIGHWAY ADMINSTRATION, SHALL APPLY ON THIS PROJECT

STANDARD PLATES

PLATE NO.	DESCRIPTION
1070M	SUPPLEMENTAL PAVEMENT REINFORCEMENT
1103K	TYPICAL DOWEL BAR ASSEMBLY (2 SHEETS)
1150R	CONCRETE HEADER JOINTS (2 SHEETS)
3000L	REINFORCED CONCRETE PIPE (5 SHEETS)
3002B	REINFORCED CONCRETE INCREASER PIPE
3006G	GASKET JOINT FOR R.C. PIPE (2 SHEETS)
3007D	SHEAR REINFORCEMENT FOR PRECAST DRAINAGE STRUCTURES
3014J	REINFORCED CONCRETE PIPE ARCH (2 SHEETS)
3040F	CORRUGATED METAL PIPE CULVERT (STANDARD 2-2/3" x 1/2" CORRUGATION)
3100G	CONCRETE APRON FOR REINFORCED CONCRETE PIPE
3110G	CONCRETE APRON FOR REINFORCED CONCRETE PIPE-ARCH
3128H	METAL APRON & GRATE (2 SHEETS)
3131C	PRECAST CONCRETE HEADWALL FOR SUBSURFACE DRAINS
3133C	RIPRAP AT RCP OUTLETS
3134C	RIPRAP AT CMP OUTLETS
3145F	CONCRETE PIPE TIES
3221C	CORRUGATED STEEL PIPE COUPLING BAND (3 SHEETS)
4005L	MANHOLE OR CATCH BASIN TYPE A & B CONE SECTIONS PRECAST-DESIGN F
4006L	MANHOLE OR CATCH BASIN PRECAST-DESIGNS G & H
4008E	CATCH BASIN (SECTIONAL CONCRETE PIPE)-DESIGN I
4010H	CONCRETE SHORT CONE & ADJUSTING RING (SECTIONAL CONCRETE)
4011E	PRECAST CONCRETE BASE
4020J	MANHOLE OR CATCH BASIN FOR USE WITH OR WITHOUT TRAFFIC LOADS (2 SHEETS)
① 4024A	48" DIA. PRECAST SHALLOW DEPTH CATCH BASIN-DESIGN SD
4026A	CONCRETE ENCASED CONCRETE ADJUSTING RINGS
4101D	RING CASTING FOR MANHOLE OR CATCH BASIN
4108F	ADJUSTING RINGS FOR CATCH BASINS & MANHOLES
4110F	COVER CASTING FOR MANHOLE (FOR USE IN ALL TRAFFIC AREAS)-CASTING NO. 715 & 716
4132F	CATCH BASIN FRAME CASTING (FOR SQUARE GRATE)-CASTING NO. 805
4140D	SPECIAL GRATE CASTINGS FOR CATCH BASIN (CONVEX & CONCAVE)-CASTING NO. 720 & 721
4143E	STOOL GRATE & CONCRETE FRAME (MEDIAN DRAINS)-CASTING NO. 731
4154B	CATCH BASIN GRATE CASTING-CASTING 816
4180J	MANHOLE OR CATCH BASIN STEP
7020K	CONCRETE CURB (DESIGN B, V, S, DR & BR) (2 SHEETS)
7035N	CONCRETE WALK & CURB RETURNS AS ENTRANCES
7038A	DETECTABLE WARNING SURFACE TRUNCATED DOMES
7100H	CONCRETE CURB & GUTTER (DESIGN B & V)
7102J	CONCRETE CURB & GUTTER (DESIGN BR, D, S, B4, B5, & D3) (2 SHEETS)
7107I	ENTRANCE NOSE (URBAN DESIGN)
7108G	EXIT NOSE (URBAN DESIGN)
7111J	INSTALLATION OF CATCH BASIN CASTINGS (CONCRETE CURB & GUTTER)
7113A	CONCRETE APPROACH NOSE DETAIL
8000I	STANDARD BARRICADES
8106B	EQUIPMENT PAD B (CAST-IN-PLACE OR PRECAST)
8127C	LIGHT FOUNDATION-DESIGN E (40' POLE OR LESS) (2 SHEETS)
8150C	INSTALLATION OF CULVERT MARKERS
8309A	REINFORCED CONCRETE MEDIAN BARRIER TYPE F & GLARE SCREEN (3 SHEETS)
8318C	GUARDRAIL ANCHORAGE PLATE FOR BRIDGES AND BCT'S
8326D	FLEXIBLE PLASTIC GLARE SCREEN
8337C	TEMPORARY PORTABLE PRECAST CONCRETE BARRIER (TYPE F)(3 SHEETS)
8338D	W-BEAM GUARDRAIL & END ANCHORAGES (STEEL POSTS)(4 SHEETS)
8400E	PIPE RAILING
9102D	TURF ESTABLISHMENT AREA (AT PIPE CULVERT ENDS)

① INCLUDES A 58" DIAMETER, 4020 COVER.

NOTE: FOR ADDITIONAL STANDARD PLATES, SEE SHEET NO. SS1.

S.P. 179-020-031 S.P. 019-605-028

STANDARD PLATES

DRAWN BY: GJ | CHECKED BY: HS | CERTIFIED BY _____ LICENSED PROFESSIONAL ENGINEER LIC. NO. 18520 DATE 7/26/12

STATE PROJ. NO. 1901-148 (T.H. 13) SHEET NO. 13 OF 442 SHEETS

PLOTTED/REVISED: 26-JUL-2012 13:02
DISTRICT #: METRO
IPLOT NAME: d1901148_sn
PATH & FILENAME: Projects/DM_ROS/013/1901/148/Design/d1901148_sn.dgn

SOILS AND CONSTRUCTION NOTES

1. TOP OF GRADING SUBGRADE AND GRADING GRADE, IS DEFINED AS THE BOTTOM OF THE AGGREGATE BASE.

2. GRANULAR MATERIAL SHALL MEET REQUIREMENTS OF SPEC. 3149.

3. SELECT GRANULAR MATERIAL SHALL MEET REQUIREMENTS OF SPEC. 3149.

4. FINE FILTER AGGREGATE SHALL MEET THE REQUIREMENTS OF SPEC. 3149.

5. STRIP ALL INPLACE TOPSOIL AND SLOPE DRESSING IN AREAS TO BE DISTURBED BY CONSTRUCTION AND REUSE AS SLOPE DRESSING.

6. ALL DISTURBED ROADWAY MATERIALS SUCH AS CONCRETE, BITUMINOUS, AND AGGREGATES MAY BE UTILIZED ACCORDING TO MN/DOT SPECIFICATIONS. MATERIALS NOT UTILIZED ON THIS PROJECT WILL BECOME THE PROPERTY OF THE CONTRACTOR AND DISPOSED OF OFF THE RIGHT OF WAY IN ACCORDANCE WITH MN/DOT SPECIFICATION 2104 AND AS AGREED UPON BY THE ENGINEER.

7. AS A PRECAUTIONARY MEASURE FROM A SOILS STANDPOINT, TRAFFIC LANES TO BE USED DURING CONSTRUCTION MUST BE DELINEATED TO KEEP VEHICLES A SAFE DISTANCE AWAY FROM THE ADJACENT EXCAVATION. THE DELINEATION SHOULD COINCIDE WITH POINTS ESTABLISHED BY PROJECTING A 1V:2H OR GREATER (FLATTER) SLOPE BETWEEN THE EDGE OF THE TRAFFIC SURFACE AND THE BOTTOM OF THE EXCAVATION.

8. IN ANY CASE WHERE GRANULAR EMBANKMENTS OR BACKFILL JOIN PLASTIC SOIL EMBANKMENTS OR BACKFILL, PROVIDE A 1(V):20(H) TRANSITION TAPER BETWEEN THE CHANGE IN MATERIAL TO PREVENT AN ABRUPT SOILS DIFFERENTIAL. THE 1(V):20(H) TAPER SHALL BE CONSTRUCTED SO THAT THE GRANULAR BACKFILL MATERIAL OVERLAYS THE ADJACENT PLASTIC SOIL BACKFILL.

9. WHERE SUBCUTS RUN INTO DRIVEWAYS OR LOCAL ROADS, CUT VERTICALLY TO THE BOTTOM OF THE INPLACE SURFACING OR TO THE BOTTOM OF THE NEW SURFACING DESIGN, WHICHEVER IS DEEPER, THEN AT A SP 1901-148 TH 13 1(V):4(H) TAPER TO THE BOTTOM OF THE RECOMMENDED SUBGRADE EXCAVATION.

10. UNLESS STATED ELSEWHERE, PROVIDE FOR 1(V):20(H) TAPERS WHEN CHANGING SUBCUT DEPTHS.

11. THE BOTTOM OF ALL SUBCUTS SHALL BE SHAPED AND COMPACTED BY THE "QUALITY COMPACTION METHOD."

12. TEST ROLLING SHALL BE REQUIRED.

13. OBTAIN COMPACTION ON THE AGGREGATE BASE AND AGGREGATE SHOULDERING PORTIONS OF PERMANENT CONSTRUCTION IN ACCORDANCE WITH THE "MODIFIED PENETRATION INDEX METHOD" IN AREAS WHERE THE THICKNESS IS 4" OR MORE. THE TEST SHALL BE PERFORMED IN ACCORDANCE WITH SPEC. 2211.3C3. THIS WOULD INCLUDE ANY AREAS WHERE CRUSHED CONCRETE OR SALVAGED ASPHALT MAY BE USED FOR AGGREGATE BASE OR SHOULDERING. IN AREAS WHERE THE THICKNESS IS LESS THAN 4" OBTAIN THE COMPACTION BY THE "QUALITY COMPACTION METHOD" REQUIREMENTS.

14. OBTAIN COMPACTION ON THE GRADING AND AGGREGATE BASE PORTIONS OF TEMPORARY CONSTRUCTION IN ACCORDANCE WITH THE "QUALITY COMPACTION METHOD" REQUIREMENTS.

15. THE CONTRACTOR MAY SUBSTITUTE, AT NO COST TO MN/DOT, THE AGGREGATE SHOULDERING CLASS 2 WITH AGGREGATE SHOULDERING CLASS 1 MOD. THE AGGREGATE SHOULDERING CLASS 1 MOD. SHALL BE MODIFIED TO CONTAIN 40%-60% (BY WEIGHT) SALVAGED BITUMINOUS OR CONCRETE AGGREGATE. THE CRUSHED CONCRETE AND/OR BITUMINOUS SHALL BE BLENDED INTO A HOMOGENEOUS COMPOSITE MIXTURE. THE GRADATION OF THE COMPOSITE MIXTURE SHALL MEET THE GRADATION REQUIREMENTS OF CLASS 1 OR CLASS 2 AGGREGATE, MN/DOT SPEC. 3138.

16. THE CONTRACTOR IS HEREBY REMINDED OF HIS RESPONSIBILITY UNDER STATE LAW TO CONTACT ALL UTILITIES THAT MAY HAVE FACILITIES IN THE AREA. CONTACT MUST BE MADE THROUGH GOPHER STATE ONE-CALL.

17. THE BITUMINOUS MIXTURES SHALL MEET THE MOST CURRENT SPEC. 2360 REQUIREMENTS.

18. CONTRACTOR SHALL PROVIDE TACK COAT BETWEEN ALL BITUMINOUS LAYERS AND PRIOR TO PLACING ANY BITUMINOUS MIXTURES ON EXISTING PAVEMENT IN ACCORDANCE WITH SPECIFICATION 2357, WHICH SHALL BE INCIDENTAL.

19. FOR THE TH 13 SHADOW TREATMENT SECTION AT THE CSAH 5 BRIDGE, PLACE 6 INCH SUBSURFACE DRAINS IN ACCORDANCE WITH STANDARD PLANS 5-297.430 AND 5-297.433 WITH SUBSURFACE DRAIN, SUBCUT DRAIN TYPE. OUTLET DRAINS TO DRAINAGE STRUCTURES OR SIDE SLOPES.

20. ANY EMBANKMENT CONSTRUCTION BELOW THE SUBGRADE CORRECTION MAY BE CONSTRUCTED USING SUITABLE GRADING MATERIAL FROM ADJACENT CUTS OR FROM BORROW.

21. PROVIDE A FULL DEPTH SAWCUT WHERE PLACING NEW PAVEMENT NEXT TO INPLACE PAVEMENT TO ENSURE A UNIFORM JOINT. PROVIDE AN ITEM BITUMINOUS AND/OR CONCRETE SAW CUTTING.

22. CONTAMINATED SOIL WILL BE ENCOUNTERED ON THIS PROJECT. SPECIAL PROVISIONS FROM MN/DOT'S ENVIRONMENTAL SERVICE OFFICE HAVE BEEN PROVIDED CONCERNING THE HANDLING OF THIS CONTAMINATED SOIL.

23. PIPE SEWERS CONNECTING MANHOLES AND CATCH BASINS SHALL BE IN ACCORDANCE WITH SPEC. 2503. BEDDING AND BACKFILL SHALL CONSIST OF UNIFORM SUITABLE GRADING MATERIAL MATCHING ADJACENT SOILS UNLESS OTHERWISE DIRECTED BY THE ENGINEER.

24. THE ENGINEER SHALL SEE THAT THE TERMINI OF ALL PORTABLE CONCRETE MEDIAN BARRIER LOCATIONS FOR ONCOMING TRAFFIC ARE EITHER SET BACK AT LEAST 30 FEET FROM THE EDGE OF TRAVELED LANE OR WHATEVER DISTANCE AS DEEMED APPROPRIATE FOR THE SITUATION OR PROTECTED BY AN ATTENUATOR DEVICE.

25. IT SHALL BE THE ENGINEER'S RESPONSIBILITY TO SEE THAT THE TEMPORARY EROSION ITEMS ARE USED THROUGHOUT THE PROJECT, WHENEVER PRACTICAL, EVEN THOUGH SPECIFIC LOCATIONS FOR THEIR USE MAY NOT BE DESIGNATED DUE TO CONSTRUCTION STAGING.

26. PROVIDE FOR 6" MINIMUM TOPSOIL ON ALL TURFED AREAS. (EXCAVATION - COMMON)

27. ALL SEED BED PREPARATION SHALL BE AS PER SPEC. 2575 AND THE FOLLOWING: WHEN PROJECT FERTILIZER HAS BEEN APPLIED, ALL AREAS SHALL BE IMMEDIATELY BLANKETED TO PREVENT ANY RUNOFF OF THE FERTILIZER FROM THE PROJECT.

28. NO EXTRA PAYMENT WILL BE MADE FOR TEMPORARY STOCKPILING OF EXCAVATION, EMBANKMENT AND/OR BORROW MATERIAL.

29. ANY DEBRIS WHICH MAY BE ENCOUNTERED DURING GRADING, SHALL BE DISPOSED OF BY THE CONTRACTOR AT HIS EXPENSE, OFF THE PROJECT RIGHT OF WAY IN A SUITABLE DISPOSAL AREA AS APPROVED BY THE ENGINEER.

30. UNLESS OTHERWISE RECOMMENDED, PROVIDE FOR SUBCUTS AND BACKFILL ACCORDINGLY THROUGHOUT THE ENTIRE PROJECT AS DETAILED ON SHEET NO. 87.

31. EXTREME CARE SHALL BE TAKEN SO THAT ALL EXISTING TREES LOCATED OUTSIDE THE CONSTRUCTION AREAS ARE NOT REMOVED OR DAMAGED, OTHER THAN BUCKTHORN OR ASH TREES.

32. IF STEPS ARE REQUIRED FOR ANY DRAINAGE STRUCTURE, THEY ARE CONSIDERED INCIDENTAL.

33. THE TYING OF ALL DRAINAGE PIPE JOINTS IDENTIFIED ON THE DRAINAGE TABULATIONS AND PROFILES ARE CONSIDERED INCIDENTAL.

EARTHWORK QUANTITIES

STATION TO STATION	EXCAVATION			EMBANKMENT					TOTAL EXCAVATION	TOTAL EMBANKMENT
	COMMON	SUBGRADE	STRUCTURE CLASS U	COMMON (CV)	GRANULAR (CV)	SELECT (CV)	SELECT GRANULAR MOD 10%(CV)	TOPSOIL		
	CU YD	CU YD	CU YD	CU YD	CU YD	CU YD	CU YD	CU YD	CU YD	CU YD
INTERCHANGE QUANTITY										
EB13										
664+64.00 TO 665+00.00	47	229		19	170	59		26	276	274
665+00.00 TO 665+50.00	65	318		26	236	82		36	383	380
665+50.00 TO 666+00.00	68	318		37	236	82		43	386	398
666+00.00 TO 666+50.00	78	318		30	236	82		45	396	393
666+50.00 TO 667+00.00	95	318		23	236	82		46	413	387
667+00.00 TO 667+50.00	113	318		21	236	82		46	431	385
667+50.00 TO 668+00.00	130	318		24	236	82		47	448	389
668+00.00 TO 668+50.00	145	318		22	236	82		47	463	387
668+50.00 TO 669+00.00	163	317		21	236	82		47	480	386
669+00.00 TO 669+50.00	189	316		24	236	82		48	505	390
669+50.00 TO 670+00.00	276	475		49	354	124		72	751	599
670+00.00 TO 670+50.00	348	632		78	472	165		95	980	810
670+50.00 TO 671+00.00	355	629		83	470	164		95	984	812
671+00.00 TO 671+50.00	383	632		61	473	165		95	1015	794
671+50.00 TO 672+00.00	396	642		42	482	168		94	1038	786
672+00.00 TO 672+50.00	389	653		43	491	171		92	1042	797
672+50.00 TO 673+00.00	394	665		60	500	174		89	1059	823
673+00.00 TO 673+50.00	397	667		95	509	177		87	1064	868
673+50.00 TO 674+00.00	394	670		90	519	180		84	1064	873
674+00.00 TO 674+50.00	394	677		79	525	182		82	1071	868
674+50.00 TO 675+00.00	399	689		66	549	189		82	1088	886
675+00.00 TO 675+50.00	402	694		44	569	195		79	1096	887
675+50.00 TO 676+00.00	409	690		40	569	195		75	1099	879
676+00.00 TO 676+50.00	424	694		25	569	194		77	1118	865
676+50.00 TO 677+00.00	428	690		13	568	194		70	1118	845
677+00.00 TO 677+50.00	454	689		73	574	196		72	1143	915
677+50.00 TO 678+00.00	526	708		143	590	202		86	1234	1021
678+00.00 TO 678+50.00	610	743		153	607	208		86	1353	1054
678+50.00 TO 679+00.00	726	778		97	625	214		83	1504	1019
679+00.00 TO 679+50.00	952	812		19	642	220		79	1764	960
679+50.00 TO 680+00.00	1217	836		2	644	221		86	2053	953
680+00.00 TO 680+50.00	1641	875		2	657	227		100	2516	986
680+50.00 TO 681+00.00	1871	946		27	704	242		90	2817	1063
681+00.00 TO 681+50.00	1996	1027		62	763	262	2	70	3023	1159
681+50.00 TO 682+00.00	1984	959		44	705	246	8	60	2943	1063
682+00.00 TO 682+50.00	1999	845		17	614	217	14	58	2844	920
682+50.00 TO 683+00.00	2471	845		15	612	215	18	68	3316	928
683+00.00 TO 683+50.00	3077	869		89	632	220	17	81	3946	1039
683+50.00 TO 684+00.00	3608	899		126	650	224	25	95	4507	1120
684+00.00 TO 684+50.00	3751	879	271	126	652	217	68	112	4901	1175
684+50.00 TO 685+00.00	3853	841	604	170	652	209	120	126	5298	1277
685+00.00 TO 685+50.00	4197	831	703	176	644	206	161	132	5731	1319
685+50.00 TO 686+00.00	4468	839	772	181	650	207	211	133	6079	1382
686+00.00 TO 686+50.00	4144	856	860	190	667	211	270	117	5860	1455
686+50.00 TO 687+00.00	3387	854	961	186	685	214	313	92	5202	1490
687+00.00 TO 687+50.00	4793	918	1066	160	738	231	383	120	6777	1632
687+50.00 TO 688+00.00	7184	958	1221	186	757	237	481	173	9363	1834
688+00.00 TO 688+50.00	8044	902	1313	233	447	509	533	193	10259	1915
688+50.00 TO 689+00.00	7576	878	1379	246	161	789	568	185	9833	1949
689+00.00 TO 689+50.00	6023	872	1398	268	160	788	594	150	8293	1960
689+50.00 TO 690+00.00	5571	1054	672	195	80	772	297	64	7297	1408
690+00.00 TO 690+50.00	5989	1244		115		755			7233	870
690+50.00 TO 691+00.00	6122	1160		114		755			7282	869
691+00.00 TO 691+50.00	5861	1068	1456	322	185	797	511	75	8385	1890
691+50.00 TO 692+00.00	5449	994	2933	461	310	820	1044	142	9376	2777
692+00.00 TO 692+50.00	5156	912	3095	414	260	798	1075	131	9163	2678
692+50.00 TO 693+00.00	4692	903	3355	437	556	515	1104	121	8950	2733
693+00.00 TO 693+50.00	4405	908	3475	432	847	237	1098	109	8788	2723
693+50.00 TO 694+00.00	4309	914	3543	416	853	239	1076	96	8766	2680
694+00.00 TO 694+50.00	4245	917	3592	393	853	239	1049	86	8754	2620
694+50.00 TO 695+00.00	4263	954	3666	396	892	239	1052	89	8883	2668
695+00.00 TO 695+50.00	4322	981	3646	390	916	239	1004	85	8949	2634
695+50.00 TO 696+00.00	4603	979	3037	350	886	242	917	64	8619	2459
696+00.00 TO 696+50.00	4702	985	2477	323	866	243	890	52	8164	2374
696+50.00 TO 697+00.00	4301	979	2344	315	857	241	845	46	7624	2304
697+00.00 TO 697+50.00	3945	983	2236	277	860	240	802	40	7164	2219

EARTHWORK QUANTITIES

STATION TO STATION	EXCAVATION			EMBANKMENT					TOTAL EXCAVATION	TOTAL EMBANKMENT
	COMMON	SUBGRADE	STRUCTURE CLASS U	COMMON (CV)	GRANULAR (CV)	SELECT (CV)	SELECT GRANULAR MOD 10%(CV)	TOPSOIL		
	CU YD	CU YD	CU YD	CU YD	CU YD	CU YD	CU YD	CU YD	CU YD	CU YD
697+50.00 TO 698+00.00	3671	974	2147	241	853	237	765	35	6792	2131
698+00.00 TO 698+50.00	3389	951	2006	273	835	229	711	32	6346	2080
698+50.00 TO 699+00.00	3136	935	1865	306	823	223	657	32	5936	2041
699+00.00 TO 699+50.00	2906	922	1751	267	808	224	619	31	5579	1949
699+50.00 TO 700+00.00	2714	911	1641	227	795	223	583	30	5266	1858
700+00.00 TO 700+50.00	2553	903	1501	216	783	219	533	29	4957	1780
700+50.00 TO 701+00.00	2374	894	1391	212	773	216	500	29	4659	1730
701+00.00 TO 701+50.00	2180	883	1338	219	763	213	486	28	4401	1709
701+50.00 TO 702+00.00	2008	873	1249	218	753	210	455	28	4130	1664
702+00.00 TO 702+50.00	1845	863	1123	208	743	208	411	29	3831	1599
702+50.00 TO 703+00.00	1694	854	1039	201	735	205	385	29	3587	1555
703+00.00 TO 703+50.00	1699	847	1004	225	729	203	362	29	3550	1548
703+50.00 TO 704+00.00	1705	840	971	253	723	201	339	30	3516	1546
704+00.00 TO 704+50.00	1467	834	836	215	715	199	292	32	3137	1453
704+50.00 TO 705+00.00	1258	833	669	174	709	198	227	36	2760	1344
705+00.00 TO 705+50.00	1212	837	462	132	695	199	156	35	2511	1217
705+50.00 TO 706+00.00	1123	845	211	95	681	199	70	46	2179	1091
706+00.00 TO 706+50.00	1010	863	67	68	678	200	18	58	1940	1022
706+50.00 TO 707+00.00	969	869		23	668	201		56	1838	948
707+00.00 TO 707+50.00	927	864		20	662	202		55	1791	939
707+50.00 TO 708+00.00	848	839		24	642	198		58	1687	922
708+00.00 TO 708+50.00	808	844		23	649	200		64	1652	936
708+50.00 TO 709+00.00	757	875		30	684	208		68	1632	990
709+00.00 TO 709+50.00	640	872		59	693	209		68	1512	1029
709+50.00 TO 710+00.00	577	880		80	702	212		68	1457	1062
710+00.00 TO 710+50.00	558	886		75	707	217		67	1444	1066
710+50.00 TO 711+00.00	512	886		79	710	218		66	1398	1073
711+00.00 TO 711+50.00	452	895		79	720	219		66	1347	1084
711+50.00 TO 712+00.00	396	902		75	731	220		65	1298	1091
712+00.00 TO 712+50.00	351	903		66	737	220		63	1254	1086
712+50.00 TO 713+00.00	305	904		56	742	220		63	1209	1081
713+00.00 TO 713+50.00	272	903		53	733	218		63	1175	1067
713+50.00 TO 714+00.00	344	911		35	721	214		60	1255	1030
714+00.00 TO 714+50.00	416	924		30	720	214		59	1340	1023
714+50.00 TO 715+00.00	397	878		44	681	206		62	1275	993
715+00.00 TO 715+50.00	351	830		47	640	195		65	1181	947
715+50.00 TO 716+00.00	307	831		43	638	194		68	1138	943
716+00.00 TO 716+50.00	240	801		53	610	195		58	1041	916
716+50.00 TO 717+00.00	202	766		82	581	196		53	968	912
717+00.00 TO 717+50.00	220	739		100	560	191		60	959	911
INTERCHANGE QUANT TOTALS	214161	85145	71346	14382	62891	26110	24119	7519	370652	135021

DISTRICT #: METRO
IPLOT NAME: d1901148_tbew
FILENAME: Projects/DM_ROS/013/1901/148/Design/d1901148_tbew.dgn
PLOTTED/REVISED: 14-JUN-2012 09:19

DRAWN BY: GJ | CHECKED BY: HS | CERTIFIED BY _____ LICENSED PROFESSIONAL ENGINEER | LIC. NO. 18520 DATE 6/18/12

S.P. 179-020-031 S.P. 019-605-028

13EB
1 OF 5

EARTHWORK TABULATIONS

STATE PROJ. NO. 1901-148 (T.H. 13) SHEET NO. 15 OF 442 SHEETS

PLOTTED/REVISED: 14-JUN-2012 09:19

DISTRICT #: METRO
IPLOT NAME: d1901148_tbew1
FILENAME: Projects/DM_ROS/013/1901/148/Design/d1901148_tbew.dgn

EARTHWORK QUANTITIES

STATION TO STATION	EXCAVATION			EMBANKMENT					TOTAL EXCAVATION	TOTAL EMBANKMENT
	COMMON	SUBGRADE	STRUCTURE CLASS U	COMMON (CV)	GRANULAR (CV)	SELECT (CV)	SELECT GRANULAR MOD 10%(CV)	TOPSOIL		
	CU YD	CU YD	CU YD	CU YD	CU YD	CU YD	CU YD	CU YD	CU YD	CU YD
100% STATE QUANTITY										
EB13										
717+50.00 TO 718+00.00	238	718		96	539	187		61	956	883
718+00.00 TO 718+50.00	244	728		70	545	186		51	972	852
718+50.00 TO 719+00.00	240	737		49	552	185		42	977	828
719+00.00 TO 719+50.00	224	739		49	554	185		42	963	830
719+50.00 TO 720+00.00	214	742		49	557	185		44	956	835
720+00.00 TO 720+50.00	221	749		51	562	186		45	970	844
720+50.00 TO 721+00.00	206	764		37	576	190		45	970	848
721+00.00 TO 721+50.00	188	800		24	605	198		45	988	872
721+50.00 TO 722+00.00	170	768		22	583	189		44	938	838
722+00.00 TO 722+50.00	137	716		20	545	174		43	853	782
722+50.00 TO 723+00.00	113	726		22	554	178		42	839	796
723+00.00 TO 723+50.00	111	739		21	568	182		44	850	815
723+50.00 TO 724+00.00	114	767		21	591	188		44	881	844
724+00.00 TO 724+50.00	180	709		11	537	178		45	889	771
724+50.00 TO 725+00.00	246	651			483	168		46	897	697
725+00.00 TO 725+50.00	232	548			405	143		41	780	589
725+50.00 TO 726+00.00	219	579		4	429	150		41	798	624
726+00.00 TO 726+50.00	201	614		19	455	159		42	815	675
726+50.00 TO 727+00.00	194	622		23	461	161		41	816	686
727+00.00 TO 727+50.00	197	629		13	466	163		41	826	683
727+50.00 TO 728+00.00	199	637		11	472	165		40	836	688
728+00.00 TO 728+50.00	200	644		6	478	167		40	844	691
728+50.00 TO 729+00.00	202	650		1	482	168		41	852	692
729+00.00 TO 729+50.00	196	652		4	483	168		41	848	696
729+50.00 TO 730+00.00	182	640		9	475	166		39	822	689
730+00.00 TO 730+50.00	175	629		9	467	163		39	804	678
730+50.00 TO 731+00.00	181	641		4	475	166		39	822	684
731+00.00 TO 731+50.00	201	644		1	478	167		47	845	693
731+50.00 TO 732+00.00	206	791		1	588	203		51	997	843
732+00.00 TO 732+50.00	198	867		1	645	222		45	1065	913
732+50.00 TO 733+00.00	226	759		1	564	195		46	985	806
733+00.00 TO 733+27.00	122	410		1	305	105		25	532	435
100% STATE QUANT TOTALS	6177	22009		649	16479	5590		1382	28186	24100
INTERCHANGE QUANT TOTALS	214161	85145	71346	14382	62891	26110	24119	7519	370652	135021
TOTALS	220338	107154	71346	15031	79369	31700	24119	8901	398838	159120

EARTHWORK QUANTITIES

STATION TO STATION	EXCAVATION			EMBANKMENT					TOTAL EXCAVATION	TOTAL EMBANKMENT
	COMMON	SUBGRADE	STRUCTURE CLASS U	COMMON (CV)	GRANULAR (CV)	SELECT (CV)	SELECT GRANULAR MOD 10%(CV)	TOPSOIL		
	CU YD	CU YD	CU YD	CU YD	CU YD	CU YD	CU YD	CU YD	CU YD	CU YD
INTERCHANGE QUANTITY										
CSAH5CONN										
001+50.00 TO 002+00.00	174	153		151		258		34	327	443
002+00.00 TO 002+50.00	169	169		91		190		35	338	316
002+50.00 TO 003+00.00	134	159		60		159		39	293	258
003+00.00 TO 003+50.00	111	158		64		159		40	269	263
TOTALS	588	639		366		766		148	1227	1280

EARTHWORK QUANTITIES

STATION TO STATION	EXCAVATION			EMBANKMENT					TOTAL EXCAVATION	TOTAL EMBANKMENT
	COMMON	SUBGRADE	STRUCTURE CLASS U	COMMON (CV)	GRANULAR (CV)	SELECT (CV)	SELECT GRANULAR MOD 10%(CV)	TOPSOIL		
	CU YD	CU YD	CU YD	CU YD	CU YD	CU YD	CU YD	CU YD	CU YD	CU YD
INTERCHANGE QUANTITY										
CSAH5										
103+00.00 TO 103+50.00	198	374		29		375		13	572	417
103+50.00 TO 104+00.00	174	366		35		367		12	540	414
104+00.00 TO 104+50.00	179	346		32		347		12	525	391
104+50.00 TO 105+00.00	194	375		80		376		15	569	471
105+00.00 TO 105+50.00	186	486		64		486		9	672	559
105+50.00 TO 106+00.00	208	526		15		526		3	734	544
106+00.00 TO 106+50.00	199	430		23		430		11	629	464
106+50.00 TO 107+00.00	150	363		21		364		17	513	402
107+00.00 TO 107+50.00	157	363		25		365		18	520	408
107+50.00 TO 108+00.00	163	362		26		365		18	525	409
108+00.00 TO 108+50.00	204	398		28		400		18	602	446
108+50.00 TO 109+00.00	197	418		53		432		18	615	503
109+00.00 TO 109+50.00	127	377		124		431		20	504	575
109+50.00 TO 110+00.00	114	297		185		417		25	411	627
110+00.00 TO 110+50.00	103	217		214		402		27	320	643
110+50.00 TO 111+00.00	89	209		229		449		24	298	702
111+00.00 TO 111+50.00	117	368		158		640		18	485	816
111+50.00 TO 111+82.64	809	1780		251		2323		53	2589	2627
SUB-TOTALS	3568	8055		1592		9495		331	11623	11418
113+62.87 TO 114+00.00	755	387		26		387		76	1142	489
114+00.00 TO 114+50.00	1580	429		73		429		145	2009	647
114+50.00 TO 115+00.00	1816	465		451		477		160	2281	1088
115+00.00 TO 115+50.00	1151	522		830	82	465		184	1673	1561
115+50.00 TO 116+00.00	390	444		738	82	416		151	834	1387
116+00.00 TO 116+50.00	138	236		369		398		58	374	825
116+50.00 TO 117+00.00	45	161		78		494		6	206	578
117+00.00 TO 117+50.00	31	119		8		585			150	593
117+50.00 TO 118+00.00	73	52	72	164	16	512		23	197	715
118+00.00 TO 118+50.00	90	21	144	373	31	433		45	255	882
118+50.00 TO 119+00.00	89	13	71	485	16	404		49	173	954
119+00.00 TO 119+50.00	94	8		567		377		52	102	996
119+50.00 TO 120+00.00	91	5		612		371		50	96	1033
120+00.00 TO 120+50.00	84	4		648		362		49	88	1059
120+50.00 TO 121+00.00	82	2		633		344		49	84	1026
121+00.00 TO 121+50.00	77	3		482		327		46	80	855
121+50.00 TO 122+00.00	69	39		309		320		39	108	668
122+00.00 TO 122+50.00	77	132		158		316		33	209	507
122+50.00 TO 123+00.00	248	279		45		380		35	527	460
123+00.00 TO 123+50.00	547	487		19		594		21	1034	634
123+50.00 TO 124+00.00	431	375		98		530		19	806	647
SUB-TOTALS	7958	4183	287	7166	227	8921		1290	12428	17604
TOTALS	11526	12238	287	8758	227	18416		1621	24051	29022

13EB
NBCSAH5
CSAH5CONN
2 OF 5

S.P. 179-020-031 S.P. 019-605-028

EARTHWORK TABULATIONS

DRAWN BY: GJ | CHECKED BY: HS | CERTIFIED BY _____ LICENSED PROFESSIONAL ENGINEER LIC. NO. 18520 DATE 6/18/12

STATE PROJ. NO. 1901-148 (T.H. 13) SHEET NO. 16 OF 442 SHEETS

EARTHWORK QUANTITIES

STATION TO STATION	EXCAVATION COMMON	EXCAVATION SUBGRADE	EXCAVATION STRUCTURE CLASS U	EXCAVATION SPECIAL	EMBANKMENT COMMON (CV)	EMBANKMENT GRANULAR (CV)	EMBANKMENT SELECT (CV)	EMBANKMENT SELECT GRANULAR MOD 10%(CV)	EMBANKMENT TOPSOIL	TOTAL EXCAVATION	TOTAL EMBANKMENT
	CU YD	CU YD	CU YD	CU YD	CU YD	CU YD	CU YD	CU YD	CU YD	CU YD	CU YD
INTERCHANGE QUANTITY											
126TH ST											
011+50.00 TO 012+00.00	74	122			5		122		17	196	144
012+00.00 TO 012+50.00	91	122			7		122		16	213	145
012+50.00 TO 013+00.00	100	117			18		118		15	217	151
013+00.00 TO 013+50.00	88	84			42		113		17	172	172
013+50.00 TO 014+00.00	71	42			98		118		26	113	242
014+00.00 TO 014+50.00	71	15			163		123		33	86	319
014+50.00 TO 015+00.00	94	9			234		123		41	103	398
015+00.00 TO 015+50.00	110	9		846	1121		123		52	965	1296
015+50.00 TO 016+00.00	118			1371	1890		122		63	1489	2075
016+00.00 TO 016+50.00	119			776	1866		122		69	895	2057
016+50.00 TO 017+00.00	113			577	1830		122		69	690	2021
017+00.00 TO 017+50.00	115			803	1651		122		72	918	1845
017+50.00 TO 018+00.00	106			1088	1570		122		68	1194	1760
018+00.00 TO 018+50.00	105			1334	1547		122		67	1439	1736
018+50.00 TO 019+00.00	114			1533	1413		131		73	1647	1617
019+00.00 TO 019+50.00	110			1715	1203		139		66	1825	1408
019+50.00 TO 020+00.00	100			2101	1193		139		56	2201	1388
020+00.00 TO 020+50.00	105			2545	1322		139		61	2650	1522
020+50.00 TO 021+00.00	109			2807	1366		139		65	2916	1570
021+00.00 TO 021+50.00	114			3001	1573		140		70	3115	1783
023+00.00 TO 023+50.00	774	278		6174	3513		558		233	7226	4304
023+50.00 TO 024+00.00	181	112		201	149		139		40	494	328
024+00.00 TO 024+50.00	82	81		402	309		139		40	565	488
024+50.00 TO 025+00.00	68	79		414	308		139		41	561	488
025+00.00 TO 025+50.00	67	81		452	305		139		42	600	486
025+50.00 TO 026+00.00	62	83		314	194		137		27	459	358
026+00.00 TO 026+50.00	54	80		145	70		131		13	279	214
026+50.00 TO 027+00.00	55	74		145	67		124		12	274	203
027+00.00 TO 027+50.00	56	73		144	62		122		12	273	196
027+50.00 TO 028+00.00	70	98		70	27		122		12	238	161
028+00.00 TO 028+50.00	85	122					122		12	207	134
TOTALS	3581	1681		28958	25116		4393		1500	34220	31009

EARTHWORK QUANTITIES

STATION TO STATION	EXCAVATION COMMON	EXCAVATION SUBGRADE	EXCAVATION STRUCTURE CLASS U	EMBANKMENT COMMON (CV)	EMBANKMENT GRANULAR (CV)	EMBANKMENT SELECT (CV)	EMBANKMENT SELECT GRANULAR MOD 10%(CV)	EMBANKMENT TOPSOIL	TOTAL EXCAVATION	TOTAL EMBANKMENT
	CU YD	CU YD	CU YD	CU YD	CU YD	CU YD	CU YD	CU YD	CU YD	CU YD
INTERCHANGE QUANTITY										
FRONTCON1										
10+50.00 TO 11+00.00	156	67		269		147		62	223	478
11+00.00 TO 11+50.00	210	101		299		129		72	311	500
11+50.00 TO 12+00.00	433	115		175		121		67	548	363
12+00.00 TO 12+50.00	652	105		58		105		67	757	230
12+50.00 TO 13+00.00	658	85	64	116	7	85		75	807	283
13+00.00 TO 13+50.00	423	69	104	239	13	69		79	596	400
13+50.00 TO 14+00.00	408	62	75	173	12	62		81	545	328
14+00.00 TO 14+50.00	511	62	67	44	12	62		81	640	199
14+50.00 TO 15+00.00	412	62	32	23	6	62		82	506	173
TOTALS	3863	728	342	1396	50	842		666	4933	2954

EARTHWORK QUANTITIES

STATION TO STATION	EXCAVATION COMMON	EXCAVATION SUBGRADE	EXCAVATION STRUCTURE CLASS U	EMBANKMENT COMMON (CV)	EMBANKMENT GRANULAR (CV)	EMBANKMENT SELECT (CV)	EMBANKMENT SELECT GRANULAR MOD 10%(CV)	EMBANKMENT TOPSOIL	TOTAL EXCAVATION	TOTAL EMBANKMENT
	CU YD	CU YD	CU YD	CU YD	CU YD	CU YD	CU YD	CU YD	CU YD	CU YD
INTERCHANGE QUANTITY										
NWFRONT										
5+50.00 TO 6+00.00	341	81		4		81		20	422	105
6+00.00 TO 6+50.00	244	83		4		83		19	327	106
6+50.00 TO 7+00.00	297	150		5		150		16	447	171
7+00.00 TO 7+50.00	365	174		5		174		14	539	193
TOTALS	1247	488		18		488		69	1735	575

EARTHWORK QUANTITIES

STATION TO STATION	EXCAVATION COMMON	EXCAVATION SUBGRADE	EXCAVATION STRUCTURE CLASS U	EMBANKMENT COMMON (CV)	EMBANKMENT GRANULAR (CV)	EMBANKMENT SELECT (CV)	EMBANKMENT SELECT GRANULAR MOD 10%(CV)	EMBANKMENT TOPSOIL	TOTAL EXCAVATION	TOTAL EMBANKMENT
	CU YD	CU YD	CU YD	CU YD	CU YD	CU YD	CU YD	CU YD	CU YD	CU YD
INTERCHANGE QUANTITY										
NEFRONT2										
027+00.00 TO 027+50.00	46			43				25	46	68
027+50.00 TO 028+00.00	67			58				33	67	91
028+00.00 TO 028+50.00	35			23				21	35	44
028+50.00 TO 029+00.00	20			2				11	20	13
TOTALS	168			126				90	168	216

EARTHWORK QUANTITIES

STATION TO STATION	EXCAVATION COMMON	EXCAVATION SUBGRADE	EXCAVATION STRUCTURE CLASS U	EMBANKMENT COMMON (CV)	EMBANKMENT GRANULAR (CV)	EMBANKMENT SELECT (CV)	EMBANKMENT SELECT GRANULAR MOD 10%(CV)	EMBANKMENT TOPSOIL	TOTAL EXCAVATION	TOTAL EMBANKMENT
	CU YD	CU YD	CU YD	CU YD	CU YD	CU YD	CU YD	CU YD	CU YD	CU YD
INTERCHANGE QUANTITY										
NEFRONT3										
5+59.60 TO 6+09.60	45	73		31		77		19	118	127
6+09.60 TO 6+59.60	18	61		23		77		16	79	116
6+59.60 TO 7+09.60	16	48		20		77		15	64	112
7+09.60 TO 7+59.60	33	59		9		74		16	92	99
7+59.60 TO 8+09.60	57	75		4		75		17	132	96
8+09.60 TO 8+59.60	192	119		4		121		20	311	145
8+59.60 TO 9+09.60	229	145		6		148		21	374	175
TOTALS	590	580		97		649		124	1170	870

126TH
FRONTCON1
NWFRONT
NEFRONT2
NEFRONT3

S.P. 179-020-031 S.P. 019-605-028

EARTHWORK TABULATIONS

DRAWN BY: GJ | CHECKED BY: HS | CERTIFIED BY _____ LICENSED PROFESSIONAL ENGINEER | LIC. NO. 18520 DATE 7/26/12

STATE PROJ. NO. 1901-148 (T.H. 13) SHEET NO. 17 OF 442 SHEETS

PLOTTED/REVISED: 26-JUL-2012 13:24
DISTRICT #: METRO
IPLOT NAME: d1901148_tbew2
FILENAME: Projects/DM_ROS/013/1901/148/Design/d1901148_tbew.dgn

EARTHWORK QUANTITIES

STATION TO STATION	EXCAVATION			EMBANKMENT					TOTAL EXCAVATION	TOTAL EMBANKMENT
	COMMON	SUBGRADE	STRUCTURE CLASS U	COMMON (CV)	GRANULAR (CV)	SELECT (CV)	SELECT GRANULAR MOD 10%(CV)	TOPSOIL		
	CU YD	CU YD	CU YD	CU YD	CU YD	CU YD	CU YD	CU YD	CU YD	CU YD
INTERCHANGE QUANTITY										
SEFRONT										
030+50.00 TO 031+00.00	169	104		6		104		13	273	123
031+00.00 TO 031+50.00	131	84		5		84		15	215	104
031+50.00 TO 032+00.00	124	81		5		81		16	205	102
032+00.00 TO 032+50.00	95	72		6		72		15	167	93
032+50.00 TO 033+00.00	61	32		4		32		15	93	51
033+00.00 TO 033+50.00	43							15	43	15
033+50.00 TO 034+00.00	35							10	35	10
034+00.00 TO 034+50.00	22			5				10	22	15
034+50.00 TO 035+00.00	17			26				15	17	41
035+00.00 TO 035+50.00	15			42				15	15	57
035+50.00 TO 036+00.00	14			33				14	14	47
036+00.00 TO 036+50.00	7			21				6	7	27
036+50.00 TO 037+00.00	12			13				9	12	22
037+00.00 TO 037+50.00	26			5				17	26	22
037+50.00 TO 038+00.00	52	28		10		28		12	80	50
TOTALS	823	401		181		401		197	1224	779

EARTHWORK QUANTITIES

STATION TO STATION	EXCAVATION			EMBANKMENT					TOTAL EXCAVATION	TOTAL EMBANKMENT
	COMMON	SUBGRADE	STRUCTURE CLASS U	COMMON (CV)	GRANULAR (CV)	SELECT (CV)	SELECT GRANULAR MOD 10%(CV)	TOPSOIL		
	CU YD	CU YD	CU YD	CU YD	CU YD	CU YD	CU YD	CU YD	CU YD	CU YD
INTERCHANGE QUANTITY										
NWRAMP										
70+50.00 TO 71+00.00	51	343	196	113	540	136		9	590	798
71+00.00 TO 71+50.00	40	246	186	82	472	77		9	472	640
71+50.00 TO 72+00.00	31	168	183	82	436	24		9	382	551
72+00.00 TO 72+50.00	30	107	172	106	380	49	44	17	309	596
72+50.00 TO 73+00.00	14	53	76	157	271	79	44	27	143	578
73+00.00 TO 73+50.00	29	81		191	239	82		32	110	544
73+50.00 TO 74+00.00	64	106		181	190	66		42	170	479
74+00.00 TO 74+50.00	63	87		128	132	48		44	150	352
74+50.00 TO 75+00.00	64	45		229	129	47		46	109	451
75+00.00 TO 75+50.00	529			419	130	47		82	529	678
75+50.00 TO 76+00.00	746	76		311	130	47		89	822	577
76+00.00 TO 76+50.00	427	164		79	130	47		46	591	302
76+50.00 TO 77+00.00	353	177			130	47		24	530	201
77+00.00 TO 77+50.00	386	176			130	46		18	562	194
77+50.00 TO 78+00.00	447	184			136	48		15	631	199
TOTAL	3274	2013	813	2078	3575	890	88	509	6100	7140

EARTHWORK QUANTITIES

STATION TO STATION	EXCAVATION			EMBANKMENT					TOTAL EXCAVATION	TOTAL EMBANKMENT
	COMMON	SUBGRADE	STRUCTURE CLASS U	COMMON (CV)	GRANULAR (CV)	SELECT (CV)	SELECT GRANULAR MOD 10%(CV)	TOPSOIL		
	CU YD	CU YD	CU YD	CU YD	CU YD	CU YD	CU YD	CU YD	CU YD	CU YD
INTERCHANGE QUANTITY										
NWLOOP1										
81+00.00 TO 81+50.00	4462	227			168	59		127	4689	354
81+50.00 TO 82+00.00	3924	203			149	53		139	4127	341
82+00.00 TO 82+50.00	3959	216			160	57		180	4175	397
82+50.00 TO 83+00.00	3089	249			184	65		179	3338	428
83+00.00 TO 83+50.00	1717	294		4	220	77		140	2011	441
83+50.00 TO 84+00.00	1411	283		4	220	76		137	1694	437
84+00.00 TO 84+50.00	1441	252			201	69		134	1693	404
84+50.00 TO 85+00.00	974	245		12	202	69		134	1219	417
85+00.00 TO 85+50.00	641	251		12	208	71		134	892	425
85+50.00 TO 86+00.00	1006	261		2	202	68		134	1267	406
86+00.00 TO 86+50.00	928	183		72	169	58		134	1111	433
86+50.00 TO 87+00.00	653	90		211	148	53		136	743	548
TOTAL	24205	2754		317	2231	775		1708	26959	5031

EARTHWORK QUANTITIES

STATION TO STATION	EXCAVATION			EMBANKMENT					TOTAL EXCAVATION	TOTAL EMBANKMENT
	COMMON	SUBGRADE	STRUCTURE CLASS U	COMMON (CV)	GRANULAR (CV)	SELECT (CV)	SELECT GRANULAR MOD 10%(CV)	TOPSOIL		
	CU YD	CU YD	CU YD	CU YD	CU YD	CU YD	CU YD	CU YD	CU YD	CU YD
S.P. 179-020-030 QUANTITY										
WILLIAMS										
40+50.00 TO 41+00.00	167	302		75		302		10	469	387
41+00.00 TO 41+50.00	182	310		126		310		10	492	446
41+50.00 TO 42+00.00	190	317		127		317		10	507	454
42+00.00 TO 42+50.00	192	324		72		324		9	516	405
42+50.00 TO 43+00.00	206	327		19		327		12	533	358
43+00.00 TO 43+50.00	184	328		20		328		12	512	360
43+50.00 TO 44+00.00	157	328	37	40	5	328	7	13	522	393
44+00.00 TO 44+50.00	166	328	71	59	11	328	12	15	565	425
44+50.00 TO 45+00.00	161	335	34	36	5	335	6	12	530	394
TOTALS	1605	2899	142	574	21	2899	25	103	4646	3622

EARTHWORK QUANTITIES

STATION TO STATION	EXCAVATION			EMBANKMENT					TOTAL EXCAVATION	TOTAL EMBANKMENT
	COMMON	SUBGRADE	STRUCTURE CLASS U	COMMON (CV)	GRANULAR (CV)	SELECT (CV)	SELECT GRANULAR MOD 10%(CV)	TOPSOIL		
	CU YD	CU YD	CU YD	CU YD	CU YD	CU YD	CU YD	CU YD	CU YD	CU YD
INTERCHANGE QUANTITY										
VALLEYDR										
5+00.00 TO 5+50.00	16							6	16	6
5+50.00 TO 6+00.00	17							7	17	7
6+00.00 TO 6+50.00	36							10	36	10
TOTAL	69							23	69	23

SEFRONT
NWLOOP1
NWRAMP
WILLIAMS
VALLEYDR

S.P. 179-020-031 S.P. 019-605-028

4 OF 5

EARTHWORK TABULATIONS

DRAWN BY: GJ | CHECKED BY: HS | CERTIFIED BY: LICENSED PROFESSIONAL ENGINEER | LIC. NO. 18520 DATE 6/18/12

STATE PROJ. NO. 1901-148 (T.H. 13) SHEET NO. 18 OF 442 SHEETS

PLOTTED/REVISED: 14-JUN-2012 09:19
DISTRICT #: METRO
IPLOT NAME: d190l148_tbew3
FILENAME: Projects/DM_ROS/013/1901/148/Design/d190l148_tbew.dgn

EARTHWORK QUANTITIES

STATION TO STATION	EXCAVATION				EMBANKMENT					TOTAL EXCAVATION	TOTAL EMBANKMENT
	COMMON	SUBGRADE	STRUCTURE CLASS U	CONTAM-INATED MATERIAL	COMMON (CV)	GRANULAR (CV)	SELECT (CV)	SELECT GRANULAR MOD 10%(CV)	TOPSOIL		
	CU YD	CU YD	CU YD	CU YD	CU YD	CU YD	CU YD	CU YD	CU YD	CU YD	CU YD
INTERCHANGE QUANTITY											
DRIVE1											
10+10.00 TO 10+20.00	17	6	29		25	3	6		3	52	37
10+20.00 TO 10+30.00	25	8	26		21	3	8		3	59	35
10+30.00 TO 10+40.00	33	9	27		22	3	9		4	69	38
10+40.00 TO 10+50.00	36	9	28		24	3	9		4	73	40
10+50.00 TO 10+60.00	49	10	14		13	1	10		5	73	29
10+60.00 TO 10+70.00	55	10			1		10		5	65	16
10+70.00 TO 10+80.00	43	11			1		11		4	54	16
10+80.00 TO 10+90.00	36	12			1		12		4	48	17
TOTAL	294	75	124		108	13	75		32	493	228

EARTHWORK QUANTITIES

STATION TO STATION	EXCAVATION				EMBANKMENT					TOTAL EXCAVATION	TOTAL EMBANKMENT
	COMMON	SUBGRADE	STRUCTURE CLASS U	CONTAM-INATED MATERIAL	COMMON (CV)	GRANULAR (CV)	SELECT (CV)	SELECT GRANULAR MOD 10%(CV)	TOPSOIL		
	CU YD	CU YD	CU YD	CU YD	CU YD	CU YD	CU YD	CU YD	CU YD	CU YD	CU YD
INTERCHANGE QUANTITY											
DRIVE2											
10+30.00 TO 10+40.00	62	11			9		11		8	73	28
10+40.00 TO 10+50.00	45	11			2		11		5	56	18
10+50.00 TO 10+60.00	24	8			5		11		3	32	19
10+60.00 TO 10+70.00	15	2			17		11		4	17	32
10+70.00 TO 10+80.00	10	1			33		11		4	11	48
10+80.00 TO 10+90.00	10				51		11		5	10	67
10+90.00 TO 11+00.00	11				64		11		6	11	81
11+00.00 TO 11+10.00	12				69		11		7	12	87
11+10.00 TO 11+20.00	12	1			61		11		7	13	79
11+20.00 TO 11+30.00	14	5			36		11		7	19	54
11+30.00 TO 11+40.00	18	10			9		11		4	28	24
11+40.00 TO 11+50.00	19	11					11		3	30	14
TOTAL	252	60			356		132		63	312	551

DRIVE1
DRIVE2

S.P. 179-020-031 S.P. 019-605-028

5 OF 5

EARTHWORK TABULATIONS

DRAWN BY: GJ | CHECKED BY: HS | CERTIFIED BY LICENSED PROFESSIONAL ENGINEER LIC. NO. 18520 DATE 7/26/12

STATE PROJ. NO. 1901-148 (T.H. 13) SHEET NO. 19 OF 442 SHEETS

PLOTTED/REVISED: 26-JUL-2012 13:33
DISTRICT #: METRO
IPLOT NAME: d1901148_tbew4
FILENAME: Projects/DM_ROS/013/1901/148/Design/d1901148_tbew.dgn

EARTHWORK SUMMARY

A

ALIGNMENT	EXCAVATION					EMBANKMENT					TOTAL EXCAVATION	TOTAL EMBANKMENT
	COMMON ①	SUBGRADE	STRUCTURE CL U	MUCK ③	SPECIAL ②	COMMON (CV)	GRANULAR (CV)	SELECT GRANULAR (CV)	SELECT GRANULAR MOD 10% (CV)	TOPSOIL ④		
	CU YD	CU YD	CU YD	CU YD	CU YD	CU YD	CU YD	CU YD	CU YD	CU YD	CU YD	CU YD
INTERCHANGE QUANTITY												
13EB STA 664+64 TO 717+50	214161	85145	71346	241		14382	62891	26110	24119	7519	370893	135021
13EB STA 686+00 TO 690+00				2490							2490	
13EB STA 690+92 TO 695+00				1496							1496	
NBCSAH5 STA 103+00 TO 111+82.64	3568	8055				1592		9495		331	11623	11418
NBCSAH5 STA 113+62.87 TO 124+20	7958	4183	287			7166	227	8921		1290	12428	17604
CSAH5CONN STA 1+41.48 TO STA 3+62.82	588	639				366		766		148	1227	1280
NWLOOP1 STA. 81+00 TO 87+00	24205	2754				317	2231	775		1708	26959	5031
NWRAMP STA 70+50 TO 78+00	3274	2013	813			2078	3575	890	88	509	6100	7140
126TH STA 11+50 TO 28+50	3581	1681		1028	28958	25116		4393		1500	35248	31009
FRONTCON1 STA 10+50 TO 15+00	3863	728	342			1396	50	842		666	4933	2954
NWFRONT STA 5+50 TO 7+50	1247	488				18		488		69	1735	575
NEFRONT2 STA 27+00 TO 29+00	168					126				90	168	216
NEFRONT3 STA 5+59.60 TO 9+09.60	590	580				97		649		124	1170	870
SEFRONT STA 30+50 TO 38+00	823	401		61		181		401		197	1285	779
S. FRONTAGE RD AT WASHBURN AVE.				497							497	
DRIVE1 STA 10+10 TO 10+90	294	75	124			108	13	75		32	493	228
DRIVE2 STA 10+30 TO 11+50	252	60				356		132		63	312	551
VALLEYDR STA 5+00 TO 6+50	69									23	69	23
BYPASS 1		825					1390	492			825	1882
BYPASS 2		738					1463	518			738	1981
BYPASS 3		253					354	125			253	479
BYPASS 4		724					696	246			724	942
BYPASS 5 & 6		2736					2566	855			2736	3421
BYPASS 7		1242					932	310			1242	1242
BYPASS 8		1121					841	280			1121	1121
BYPASS 9		4532					3890	1297			4532	5187
BRIDGE APROACH TREATMENT		3634				472			3162		3634	3634
INTERCHANGE QUANTITY TOTALS	264641	122607	72912	5813	28958	53771	81119	58060	27369	14269	494931	234588
100% STATE QUANTITY												
EB13 STA 717+50 TO 733+27	6177	22009				649	16479	5590		1382	28186	24100
100% STATE QUANTITY TOTALS	6177	22009				649	16479	5590		1382	28186	24100
S.P. 179-020-031 QUANTITY												
WILLIAMS STA 40+50 TO 45+00	1605	2899	142			574	21	2899	25	103	4646	3622
S.P. 179-020-031 QUANTITY TOTALS	1605	2899	142			574	21	2899	25	103	4646	3622
INTERCHANGE QUANTITY TOTALS	264641	122607	72912	5813	28958	53771	81119	58060	27369	14269	494931	234588
100% STATE QUANTITY TOTALS	6177	22009				649	16479	5590		1382	28186	24100
S.P. 179-020-031 QUANTITY TOTALS	1605	2899	142			574	21	2899	25	103	4646	3622
PROJECT TOTALS	272423	147515	73054	5813	28958	54994	97619	66549	27394	15754	527763	262310

① INCLUDES 22929 CU YD TOPSOIL WHICH IS TO REMAIN ON PROJECT. ALL EXCESS TOPSOIL TO REMAIN ON PROJECT, PLACED ON SLOPES OUTSIDE P.I.

② INCLUDES BUT NOT LIMITED TO:
STEEL BEAMS, CONCRETE BLOCKS AND MISCELLANEOUS DEBRIS.
FOR LOCATIONS AND DETAILS SEE SHEET NO. 90.

③ FOR ADDITIONAL INFORMATION, SEE SHEET NO. 85, 88 AND PROFILE SHEET NO'S. 242, 247 AND 250.

④ PAID FOR AS COMMON EMBANKMENT.

S.P. 179-020-031 S.P. 019-605-028

EARTHWORK SUMMARY

DRAWN BY: GJ | CHECKED BY: HS | CERTIFIED BY [signature] LICENSED PROFESSIONAL ENGINEER LIC. NO. 18520 DATE 8/06/12

STATE PROJ. NO. 1901-148 (T.H. 13) SHEET NO. 20 OF 442 SHEETS

PLOTTED/REVISED: 06-AUG-2012 07:47
DISTRICT #: METRO
IPLOT NAME: d1901148_tbew5
FILENAME: Projects/DM_ROS/013/1901/148/Design/d1901148_tbew.dgn

PLOTTED/REVISED: 12-JUN-2012 13:28
DISTRICT: METRO
IPLOT NAME: d1901148_tb2
FILENAME: Projects/DM_ROS/013/1901/148/Design/PlanSheets/Tabulations/d1901148_tbdgn

CLEARING AND GRUBBING

B

STATION	LOC.	CLEAR TREE	GRUB TREE	CLEAR ACRE	GRUB ACRE	CLEAN ROOT② CUTTING LIN FT	TRANSPLANT TREE ① LIN FT	NOTES
INTERCHANGE QUANTITIES								
13EB								
679+21	60' RT	1	1					
680+63	70' RT	1	1					
707+14 TO 712+96	VAR RT.			0.63	0.63			
13WB								
699+88 TO 700+60	264' LT TO 383' LT	5	5					
715+00 TO 717+50	45' LT TO 48' LT					250		
715+00 TO 116+16	VAR LT			0.02	0.02			
716+24 TO 717+57	VAR LT			0.03	0.03			
715+99 TO 716+06	VAR LT	3	3					
NBCSAH5								
106+41	38' RT	1	1					
106+86	38' RT	1	1					
108+15	33' RT	1	1					
108+45	33' RT	1	1					
109+73 TO 110+93	32' RT	7	7					
114+59	33' RT	1	1					
115+10	48' RT	1	1					
115+82	35' RT	1	1					
116+19	36' RT	1	1					
116+76	45' RT	1	1					
119+36	27' RT	1	1					
119+69	29' RT	1	1					
SBCSAH5								
108+08 TO 108+69	38' LT TO 43' LT	5	5					
111+09 TO 111+58	35' LT TO 87' LT					72		
114+91 TO 116+88	38' LT TO 43' LT	5	5					
118+08 TO 119+53	VAR LT	7	7					
SEFRONT								
36+67 TO 36+97	VAR RT					54		
38+70	26' LT	1	1					
39+42	20' LT	1	1					
40+15	2' LT	1	1					
40+57	4' RT	1	1					
41+38	58' RT	1	1					
42+05 TO 42+98	VAR RT	3	3					
47+62 TO 48+37	28' RT TO 28' RT					75		
49+24 TO 49+80	27' RT TO 27' RT					56		
37+40 TO 37+48	194' LT TO 197' LT	2	2					
50+53 TO 50+57	VAR RT	2	2					
FRONTCON								
10+36 TO 12+30	VAR LT			0.21	0.21			
10+70	40' RT	1	1					
11+25 TO 11+54	VAR RT	3	3					
12+36	32' RT	1	1					
13+25 TO 13+87	VAR RT	7	7					
14+52 TO 14+59	VAR RT	2	2					
14+67 TO 15+10	25' LT TO 19' LT					44		
126CON								
14+07 TO 15+71	VAR RT	4	4					
17+86 TO 22+89	VAR LT TO VAR RT			1.19	1.19			
25+36 TO 27+50	30' LT TO 27' LT					114		
NWFRONT								
5+72	20' LT	1	1					
6+70	25' LT TO 41' LT	2	2					
7+53	43' LT						1	
7+21 TO 7+34	VAR RT	3	3					
INTERCHANGE QUANTITY SUB-TOTALS		81	81	2.08	2.08	665	1	

CLEARING AND GRUBBING

B

STATION	LOC.	CLEAR TREE	GRUB TREE	CLEAR ACRE	GRUB ACRE	CLEAN ROOT② CUTTING LIN FT	TRANSPLANT TREE ① LIN FT	NOTES
NEFRONT3								
6+08	40' LT	1	1					
7+87 TO 8+40	VAR LT	4	4					
SWRAMP								
50+80	CL	1	1					
50+95	30' RT	1	1					
51+98 TO 54+31	VAR LT	8	8					
52+89	23' RT	1	1					
54+02	21' RT	1	1					
55+39 TO 55+89	VAR RT	5	5					
56+62 TO 57+13	VAR RT TO VAR LT	6	6					
57+58 TO 57+82	VAR RT	2	2					
58+32	38' RT	1	1					
SERAMP								
60+79	62' RT	1	1					
61+16	51' RT	1	1					
61+58 TO 62+16	VAR RT	6	6					
63+41	40' RT	1	1					
NWRAMP								
71+03 TO 72+80	VAR. RT						6	
73+44 TO 73+50	VAR LT	2	2					
73+66 TO 73+89	VAR RT	3	3					
76+03 TO 76+59	VAR RT	8	8					
75+36 TO 76+15	VAR LT	5	5					
NWLOOP1								
80+85 TO 83+10	VAR RT	8	8					
83+22 TO 83+44	VAR RT	2	2					
83+66	5' LT	1	1					
84+34 TO 84+57	VAR LT	5	5					
84+68	1' RT	1	1					
85+04	23' RT	1	1					
85+50	102' RT	1	1					
85+38	43' RT	1	1					
85+50	10' RT	1	1					
85+91 TO 86+09	3' LT TO 13' LT							
SP 179-020-031 QUANTITIES								
EBWIL								
40+55 TO 40+91	46' RT TO 46' RT					37		
44+67 TO 45+03	VAR. RT					41		
WBWIL								
43+94 TO 45+16	VAR. LT						6	
INTERCHANGE QUANTITY TOTALS		160	160	2.08	2.08	665	7	
SP 179-020-031 QUANTITY TOTALS						78	6	
PROJECT TOTALS		160	160	2.08	2.08	743	13	

NOTES:

① TO BE TRANSPLANTED BY CITY OF BURNSVILLE PRIOR TO START OF PROJECT.

② FOR DETAILS, SEE SHEET NO. 99.

CLEARING & GRUBBING
SHEET 1 OF 20

S.P. 179-020-031 S.P. 019-605-028

TABULATIONS

DRAWN BY: MRS | CHECKED BY: HS | CERTIFIED BY _____ LICENSED PROFESSIONAL ENGINEER | LIC. NO. 18520 DATE 6/18/12 | STATE PROJ. NO. 1901-148 (T.H. 13) | SHEET NO. 21 OF 442 SHEETS

SAWCUTS [C]

STATION TO STATION	LOCATION	SAWING BIT PAVEMENT (FULL DEPTH) LIN FT	NOTES
INTERCHANGE QUANTITIES			
13EB			
654+47 TO 657+47	33' RT TO 84' RT	405	
657+00 TO 658+59	13' LT TO 13' LT	152	
666+69 TO 668+70	13' LT TO 13' LT	201	
670+00	16' LT to 22' RT	38	
682+86	22' LT TO 22' RT	44	②
683+80	22' LT TO 22' RT	44	②
695+00 TO 705+00	2'LT TO 2'LT	1000	
699+05	5' LT TO 34' RT	40	②
700+36	6' LT TO 34' RT	40	②
13WB			
664+64	12' LT TO 12' RT	24	
664+64 TO 689+20	12' LT TO 71' LT	2451	③
661+74 TO 663+32	11' RT TO 11' RT	158	
683+20	24' LT TO 67' LT	42	②
684+23	31' LT TO 70' LT	39	②
690+87 TO 699+38	61' LT TO 56' LT	839	
694+90 TO 704+78	5' RT TO 2' LT	989	
699+00	48' LT TO 12' RT	60	②
699+50	67' LT TO 108' LT	41	
700+10	53' LT TO 9' RT	62	②
700+12	67' LT TO 103' LT	36	
709+34 TO 718+48	12' LT TO 24' LT	877	
NBCSAH5			
103+00	12' RT TO 71' RT	83	
105+97 TO 106+12	42' RT TO 59' RT	31	
107+13 TO 107+62	49' RT TO 51' RT	69	
108+24 TO 108+48	48' LT TO 53' LT	25	
SBCSAH5			
108+24 TO 108+48	48' LT TO 53' LT	24	
126CON			
11+50	20' LT TO 20' LT	40	
12+80 TO 12+97	39' RT TO 49' RT	23	
28+70	20' LT TO 20' LT	40	
NWFRONT			
6+97 TO 7+33	45' LT TO 45' LT	36	
NEFRONT2			
26+73	18' LT TO 18' RT	36	
29+12	22' LT TO 18' RT	40	
NE FRONT3			
8+64 TO 8+96	43' LT TO 43' RT	33	
9+43 TO 9+63	31' LT TO 22' LT	23	
9+97 TO 9+96	42' RT TO 62' RT	20	
SEFRONT			
32+98 TO 33+02	67' RT TO 137' RT	95	
33+79 TO 33+98	29' RT TO 27' RT	24	
33+64 TO 33+89	30' LT TO 30' LT	24	
35+06 TO 35+30	30' RT TO 30' RT	24	
36+31 TO 36+50	30' RT TO 30' RT	24	
INTERCHANGE QUANTITY SUBTOTALS		8296	

SAWCUTS [C]

STATION TO STATION	LOCATION	SAWING BIT PAVEMENT (FULL DEPTH) LIN FT	NOTES
SEFRONT			
36+51 TO 36+71	30' LT TO 30' LT	20	
37+12 TO 37+36	31' LT TO 30' LT	24	
37+97 TO 38+13	50' LT TO 69' LT	32	
41+48 TO 41+72	31' RT TO 33' RT	24	
43+86 TO 44+03	21' RT TO 21' RT	17	
44+62 TO 44+80	21' RT TO 21' RT	18	
45+36 TO 45+52	21' TO 21' RT	17	
45+95 TO 46+21	21' RT TO 21' RT	26	
46+72 TO 46+95	21' RT TO 21' RT	23	
47+51 TO 47+67	21' RT TO 21' RT	16	
48+93 TO 49+26	21' RT TO 21' RT	33	
64+50	13' LT TO 13' RT	26	
NWRAMP			
70+83 TO 72+49	37' RT TO 41' RT	176	
FRONTCON			
16+07	18' RT TO 18' LT	36	
VALLEYDR			
5+00 TO 6+41	30' RT TO 15' RT	188	
100% STATE QUANTITIES			
13EB			
716+70 TO 718+31	12' LT TO 12' LT	161	
720+86 TO 722+20	13' LT TO 13' LT	134	
731+25 TO 731+79	24' RT TO 39' RT	14	
738+20 TO 744+21	12' LT TO 12' LT	601	
13WB			
718+26 TO 720+92	12' RT TO 12' RT	266	
721+55 TO 721+59	21' LT TO 39' LT	18	
731+65 TO 731+71	39' LT TO 52' LT	15	
738+04 TO 744+04	12' RT TO 12' RT	600	
SP 179-020-031 QUANTITIES			
WBWIL			
40+12	57' LT TO 69' RT	126	
43+40 TO 43+72	46' LT TO 45' LT	32	
43+83 TO 44+88	37' LT TO 37' LT	105	
INTERCHANGE QUANTITY TOTALS		8972	
100% STATE QUANTITY TOTALS		1809	
SP 179-020-131 QUANTITY TOTALS		263	
PROJECT TOTALS		11044	

NOTES:

① SEE SPECIAL PROVISIONS. ALL INTERCHANGE QUANTITIES.
② PROVIDED FOR THE STAGED PIPE CONSTRUCTION FOR DETAILS, SEE SHEET NO. 95 AND 96.
③ PROVIDED FOR THE TH13WB SHOULDER RECONSTRUCTION.

BUILDING REMOVAL ① [D]

ROADWAY ALIGNMENT	STATION	LOC.	BUILDING NAME	BUILDING REMOVAL LUMP SUM	DESCRIPTION
INTERCHANGE QUANTITIES					
CSAH5NB	110+00	RT	FAMOUS DAVE'S	1	
CSAH5NB	114+00	RT	BROOKS AUTOMOTIVE	1	A
CSAH5NB	116+00	RT	ADVANTAGE AUTO GLASS	1	B
NWLOOP1	83+30	LT	VALVOLINE AUTO OIL CHANGE	1	C
NWLOOP1	84+00	RT	LITTLE SAIGON RESTERAUNT	1	D
NWLOOP1	86+50	RT	TACO BELL	1	E
SEFRONT	38+00	RT	FLOORING EXPO	1	F

SAWCUTS
BUILDING REMOVALS
SHEET 2 OF 20

S.P. 179-020-031 S.P. 019-605-028

TABULATIONS

STATE PROJ. NO. 1901-148 (T.H. 13) SHEET NO. 22 OF 442 SHEETS

DRAWN BY: MRS | CHECKED BY: HS | CERTIFIED BY _____ LICENSED PROFESSIONAL ENGINEER LIC. NO. 18520 DATE 6/18/12

PLOTTED/REVISED: 12-JUN-2012 13:28
DISTRICT #: METRO
IPLOT NAME: d1901148_tb7
FILENAME: Projects/DM_ROS/013/1901/148/Design/PlanSheets/Tabulations/d1901148_tbdgn

BITUMINOUS PAVEMENT REMOVALS (E)

STATION TO STATION	LOCATION	REMOVE BITUMINOUS PAVEMENT ① SQ YD	REMOVE BITUMINOUS SHOULDER 4" DEPTH SQ YD	REMOVE BITUMINOUS BYPASS 6" DEPTH SQ YD	NOTES
INTERCHANGE QUANTITIES					
13EB					
654+47 TO 656+33	VAR RT	182			
657+00 TO 668+70	VAR LT			2183	BYPASS 1 OF 2
670+00 TO 689+81	12' RT TO 33' RT		2016		
670+00 TO 690+00	VAR LT		911		
670+00 TO 717+44	VAR RT TO VAR LT	16126			
682+86 TO 683+00	VAR RT TO VAR LT	260			PIPE CONST.
690+96 TO 747+44	16' LT TO 11' LT		1116		
691+51 TO 706+27	30' RT TO 42' RT		1373		
695+00 TO 705+00	VAR LT		3040		BYPASS 9
699+05 TO 700+36	VAR RT TO VAR LT	350			PIPE CONST.
707+01 TO 714+43	VAR RT		505		
714+30 TO 717+44	12' RT TO VAR RT		367		
13WB					
664+64 TO 718+50	VAR RT TO VAR LT	22381			
664+64 TO 689+96	12' RT TO VAR LT		1240		
664+64 TO 689+20	12' LT TO VAR LT		3256	3500	SHLD RECONST.
683+20 TO 684+23	VAR RT TO VAR LT	284			PIPE CONST.
690+86 TO 699+39	VAR LT			841	BYPASS 8
690+90 TO 718+50	10' RT TO VAR RT		1359		
698+96 TO 700+36	VAR RT TO VAR LT	663			PIPE CONST.
709+74 TO 718+48	12'LT TO VAR LT			3447	BYPASS 7
715+10 TO 718+50	14' LT TO 28' LT		261		
NBCSAH5					
103+00 TO 112+12	VAR RT TO VAR LT	4275			
105+96 TO 106+12	42' RT TO 60' RT		19		INPLACE PARKING LOT
107+17 TO 107+62	VAR RT		100		INPLACE PARKING LOT
113+88 TO 123+25	VAR RT TO VAR LT	3234			
123+25 TO 124+79	VAR RT	972			
123+91 TO 126+44	VAR RT TO VAR LT	942			
108+86 TO 110+76	VAR RT		2079		INPLACE PARKING LOT
113+88 TO 114+84	VAR RT		604		INPLACE PARKING LOT
SBCSAH5					
103+00 TO 112+19	VAR RT TO VAR LT	4018			
108+81 TO 109+66	VAR LT		212		INPLACE PARKING LOT
114+01 TO 123+43	VAR RT TO VAR LT	4007			
119+59 TO 119+94	10' LT TO 42' LT		94		INPLACE PARKING LOT
SEFRONT					
30+36 TO 50+53	VAR RT TO VAR LT	7345			
34+64 TO 34+89	VAR LT	68			
36+93 TO 41+35	VAR RT		2774		INPLACE PARKING LOT
57+01 TO 64+50	VAR RT TO VAR LT	2426			
NWRAMP					
70+35 TO 73+10	VAR RT TO VAR LT	1423			
70+55 TO 73+18	VAR LT		4591		INPLACE PARKING LOT
74+00 TO 73+89	VAR LT TO VAR RT	1067			
NWFRONT					
5+44 TO 8+00	VAR RT TO VAR LT	1136			
INTERCHANGE QUANTITY SUB-TOTALS		71159	25917	9971	

BITUMINOUS PAVEMENT REMOVALS (E)

STATION TO STATION	LOCATION	REMOVE BITUMINOUS PAVEMENT ① SQ YD	REMOVE BITUMINOUS SHOULDER 4" DEPTH SQ YD	REMOVE BITUMINOUS BYPASS 6" DEPTH SQ YD	NOTES
INTERCHANGE QUANTITIES					
126CON					
11+50 TO 13+61	VAR RT TO VAR LT	994			
13+34 TO 14+63	VAR RT TO VAR LT	262			
23+58 TO 28+70	VAR RT TO VAR LT	2365			
FRONTCON					
10+14 TO 16+05	VAR RT TO VAR LT	2167			
10+45 TO 11+20	VAR RT		730		INPLACE PARKING LOT
14+35 TO 15+32	VAR RT		736		INPLACE PARKING LOT
SWRAMP					
57+43 TO 58+02	VAR RT	75			
SERAMP					
60+44 TO 63+58	VAR RT TO VAR LT	1266			
NEFRONT2					
26+73 TO 29+12	VAR RT TO VAR LT	1987			
NEFRONT3					
5+88 TO 9+80	VAR RT TO VAR LT	1998			INCL. ENT. EXT.
8+64 TO 8+98	VAR LT	32			
9+40 TO 9+63	VAR LT	17			
9+79 TO 9+96	VAR RT	29			
VALLEY DR					
5+00 TO 6+43	CL TO VAR RT	253			
100% STATE QUANTITY					
13EB					
716+00 TO 718+50	VAR LT			1066	BYPASS 3 & 4
717+44 TO 733+31	VAR RT TO VAR LT	5326			
717+44 TO 722+76	12' RT TO 28' RT		460		
717+44 TO 733+20	12' LT TO VAR LT		760		
725+04 TO 731+20	12' RT TO VAR RT		611		
738+20 TO 714+21	12' LT TO 50' LT			2568	BYPASS 5 & 6
13WB					
718+50 TO 733+27	VAR RT TO VAR LT	5696			
718+50 TO 733+16	12' RT TO 15' RT		780		
718+50 TO 720+06	24' LT TO 29' LT		62		
722+69 TO 731+08	24' LT TO VAR LT		477		
S.P. 179-020-031 QUANTITIES					
EBWIL					
40+11 TO 45+30	VAR RT TO VAR LT	2102			
WBWIL					
40+12 TO 45+32	VAR RT TO VAR LT	2052			
43+76 TO 45+29	VAR LT		108		INPLACE PARKING LOT
INTERCHANGE QUANTITY TOTALS		82604	27383	9971	
100% STATE QUANTITY TOTALS		11022	3150	3634	
SP 179-020-031 QUANTITY TOTALS		4154	108		
PROJECT TOTALS		97780	30641	13605	

NOTES:

① APPROXIMATE DEPTH:
T.H. 13 - 9"
CSAH 5 - 6"
FRONTAGE RDS - 4"-5"
CITY STREETS - 4"

BITUMINOUS PAVEMENT REMOVALS

SHEET 3 OF 20

S.P. 179-020-031 S.P. 019-605-028

TABULATIONS

DRAWN BY: MRS | CHECKED BY: HS | CERTIFIED BY _____ LICENSED PROFESSIONAL ENGINEER LIC. NO. 18520 DATE 6/18/12

STATE PROJ. NO. 1901-148 (T.H. 13) SHEET NO. 23 OF 442 SHEETS

DISTRICT #: METRO
IPLOT NAME: d190148_tb3
FILENAME: Projects/DM_ROS/013/1901/148/Design/PlanSheets/Tabulations/d190148_tb.dgn
PLOTTED/REVISED: 12-JUN-2012 13:28

MISCELLANEOUS CONCRETE REMOVALS

F

STATION TO STATION	LOCATION	REMOVALS						NOTES
		CURB AND GUTTER	CONCRETE SIDEWALK	CONCRETE MEDIAN	CONCRETE NOSE	CONCRETE DRIVEWAY PAVEMENT	CONCRETE PAVEMENT	
		LIN FT	SQ FT	SQ FT	SQ FT	SQ YD	SQ YD	
INTERCHANGE QUANTITIES								
TH13EB								
654+60 TO 656+32	38' RT TO 102' RT	248						
692+00 TO 706+43	86' RT TO 42' RT	1496						
TH13WB								
691+16 TO 708+91	89' LT TO 104' LT	1754						
702+02 TO 709+38	VAR LT	190						
708+80 TO 709+17	16' LT TO 90' LT			1037				
709+47 TO 715+31	157' LT TO 87' LT	646						
NBCSAH5								
102+15 TO 105+30	18' RT TO VAR RT		1196					
103+00 TO 105+19	26' LT TO 32' LT			1244				
103+00 TO 105+36	VAR LT TO VAR RT	411						
103+26 TO 103+64	17' RT TO 27' RT					34		
105+77 TO 112+07	VAR LT TO VAR RT	1357						
106+06 TO 112+02	VAR LT			3411				
107+11 TO 107+52	22' RT TO 32' RT					36		
109+03 TO 109+52	17' RT TO 27' RT					33		
109+14 TO 111+59	VAR RT	1179						
111+80 TO 112+06	12' RT TO 12' RT			373				
113+21 TO 116+91	12' RT TO 53' RT	719						
113+37 TO 116+70	VAR LT			2330				
113+71 TO 114+84	VAR RT	451						
113+83 TO 114+48	85' RT TO 115' RT						46	
113+87 TO 114+33	12' RT TO 22' RT					34		
117+48 TO 123+91	17' LT TO VAR RT	1535						
117+67 TO 120+45	VAR LT			1815				
121+36 TO 123+25	VAR LT			1796				
124+13 TO 124+80	142' RT TO 72' RT	159						
SBCSAH5								
103+00 TO 104+52	13' LT TO 25' LT						158	
103+00 TO 104+95	VAR LT		977					
103+00 TO 105+21	VAR LT TO VAR RT	424						
106+09 TO 112+29	VAR LT TO VAR RT	1450						
109+11 TO 109+64	14' LT TO 28' LT					66		
113+46 TO 114+07	VAR LT			1755				
113+46 TO 117+00	VAR LT TO VAR RT	828						
115+76 TO 116+02	92' RT TO 144' RT						120	
117+49 TO 122+75	VAR LT TO VAR RT	980						
119+42 TO 120+07	VAR LT					51		
SEFRONT								
24+53 TO 35+01	14' LT TO 24' LT					38		
30+36 TO 38+20	VAR LT	833						
30+39 TO 30+59	42' LT TO 27' LT	32						
30+67 TO 41+70	VAR RT	1134						
36+18 TO 36+70	15'RT TO 25' RT					41		
INTERCHANGE QUANTITY SUB-TOTALS		15826	2173	13761		333	324	

MISCELLANEOUS CONCRETE REMOVALS

F

STATION TO STATION	LOCATION	REMOVALS						NOTES
		CURB AND GUTTER	CONCRETE SIDEWALK	CONCRETE MEDIAN	CONCRETE NOSE	CONCRETE DRIVEWAY PAVEMENT	CONCRETE PAVEMENT	
		LIN FT	SQ FT	SQ FT	SQ FT	SQ YD	SQ YD	
INTERCHANGE QUANTITIES								
SEFRONT								
36+43 TO 36+18	16' LT TO 17' LT					30		
36+86 TO 37+23	14' RT TO 24' RT					29		
36+93 TO 41+35	VAR RT	745						
37+23 TO 37+35	16' LT TO 26' LT					22		
37+26 TO 38+18	VAR LT	395						
40+19 TO 40+65	VAR LT					35		
41+45 TO 41+85	VAR RT					31		
41+72 TO 42+34	VAR RT		346					①
41+77 TO 50+73	CL TO VAR RT	702						
45+35 TO 45+55	13' RT TO 19' RT					10		
45+90 TO 46+23	14' RT TO 19' RT					16		
48+93 TO 49+27	14' RT TO 19' RT					18		
58+10 TO 60+00	14' RT TO 15' RT	190						
58+15 TO 60+00	17' LT TO 15' LT	187						
NEFRONT2								
26+73 TO 29+12	18' RT TO VAR RT	191						
26+73 TO 29+19	19' LT TO 22' LT	223						
NEFRONT3								
5+58 TO 9+74	2' RT TO VAR RT	469						
5+58 TO 9+74	2' RT TO VAR RT	469						
5+68 TO 9+42	VAR LT	371						
6+37 TO 6+71	33' LT TO 43' LT					27		
8+63 TO 9+00	VAR LT					37		
9+36 TO 9+60	VAR LT					25		
9+64 TO 9+83	21' LT TO 37' RT	66						
9+68 TO 9+80	31' RT TO 61' RT					28		
NWFRONT								
5+15 TO 5+40	VAR RT					32		
5+42 TO 7+98	VAR RT TO VAR LT	359						
5+45 TO 8+00	CL TO VAR LT	267						
6+74 TO 7+52	22' LT TO 32' LT					56		
7+35 TO 7+73	VAR RT					33		
NWRAMP								
70+65 TO 71+06	39' LT TO 49' LT					34		
71+28 TO 71+74	40' LT TO 50' LT					34		
72+15 TO 72+63	VAR LT					31		
73+16 TO 72+88	VAR RT TO VAR LT					31		
73+27 TO 73+54	20' RT TO 54' RT					32		
SERAMP								
60+43 TO 60+73	VAR RT					28		
61+14 TO 61+53	VAR RT					29		
62+18 TO 62+59	VAR RT					32		
63+03 TO 63+38	26' RT TO 36' RT					29		
INTERCHANGE QUANTITY SUB-TOTALS		20460	2519	13761		1042	324	

NOTES:

① REMOVE 4 STEPS. FOR DETAILS, SEE SHEET NO. 94.

MISCELLANEOUS CONCRETE REMOVALS

S.P. 179-020-031 S.P. 019-605-028

TABULATIONS

DRAWN BY: MRS | CHECKED BY: HS | CERTIFIED BY [signature] LICENSED PROFESSIONAL ENGINEER LIC. NO. 18520 DATE 6/18/12

DISTRICT #: METRO
IPLOT NAME: d1901148_tb
FILENAME: Projects/DM_ROS/013/1901/148/Design/PlanSheets/Tabulations/d1901148_tbdgn
PLOTTED/REVISED: 14-JUN-2012 09:20

MISCELLANEOUS CONCRETE REMOVALS

F

STATION TO STATION	LOCATION	REMOVALS						NOTES
		CURB AND GUTTER	CONCRETE SIDEWALK	CONCRETE MEDIAN	CONCRETE NOSE	CONCRETE DRIVEWAY PAVEMENT	CONCRETE PAVEMENT	
		LIN FT	SQ FT	SQ FT	SQ FT	SQ YD	SQ YD	
INTERCHANGE QUANTITIES								
126CON								
11+50 TO 12+77	20' RT TO 38' RT	139						
11+50 TO 13+61	20' RT TO 45' RT	228						
14+68 TO 15+01	62' RT TO 56' RT	52						
24+08 TO 28+70	26' LT TO 7' RT	467						
24+12 TO 28+70	73' LT TO 34'LT	465						
FRONTCON								
10+30 TO 16+07	VAR RT	370						
10+30 TO 16+05	30' LT TO 18' LT	570						
10+45 TO 11+20	VAR RT	324						
14+70 TO 15+14	16' RT TO 26' RT					34		
NWRAMP								
70+35 TO 73+10	5' RT TO 62' RT	304						
70+60 TO 72+67	VAR RT	271						
70+29 TO 74+80	VAR LT TO VAR RT	2767						
VALLEYDR								
5+00 TO 6+87	VAR RT	180						
6+41 TO 6+69	15' LT TO 26' LT	31						
FRONTCON1								
10+76 TO 11+23	5' RT TO 15' RT					35		
DRIVE2								
11+39	13' RT TO 14' RT	27						
SWRAMP								
15+47 TO 15+51	VAR RT	87						
100% STATE QUANTITIES								
13EB								
724+89 TO 725+02	20' RT TO VAR RT			76				
722+75 TO 724+81	23' RT TO 45' RT	210						
724+88 TO 725+02	20' RT TO 28' RT				76			
731+19 TO 733+26	VAR RT	217						
731+29 TO 731+65	22' RT TO VAR RT			210				
731+29 TO 731+65	22' RT TO 34' RT				210			
TH13WB								
720+24 TO 722+85	VAR LT	261						
721+59 TO 721+87	22' LT TO 26' LT				81			
721+59 TO 721+87	22' RT TO VAR RT			81				
731+33 TO 733+33	VAR LT	228						
731+40 TO 731+53	27' LT TO 48' LT				204			
100% STATE QUANTITY TOTALS		916		367	571			
INTERCHANGE QUANTITY SUB-TOTALS		26742	2519	13761		1111	324	

MISCELLANEOUS CONCRETE REMOVALS

F

STATION TO STATION	LOCATION	REMOVALS						NOTES
		CURB AND GUTTER	CONCRETE SIDEWALK	CONCRETE MEDIAN	CONCRETE NOSE	CONCRETE DRIVEWAY PAVEMENT	CONCRETE PAVEMENT	
		LIN FT	SQ FT	SQ FT	SQ FT	SQ YD	SQ YD	
SP 179-020-031 QUANTITIES								
WBWIL								
40+18 TO 45+39	VAR LT TO VAR RT	1017						
40+31 TO 43+37	VAR LT		1562					
43+77 TO 45+37	VAR LT		793					
53+27 TO 43+85	19' LT TO 29' LT					46		
EBWIL								
40+11 TO 45+30	VAR LT TO VAR RT	1032						
40+18 TO 45+22	VAR RT		2510					
INTERCHANGE QUANTITY TOTALS		26742	2519	13761		1111	324	
100% STATE QUANTITY TOTALS		916		367	571			
SP 179-020-031 QUANTITY TOTALS		2049	4865			46		
PROJECT TOTALS		29707	7384	14128	571	1157	324	

MISCELLANEOUS CONCRETE REMOVALS

SHEET 5 OF 20

S.P. 179-020-031 S.P. 019-605-028

TABULATIONS

DRAWN BY: MRS | CHECKED BY: HS | CERTIFIED BY _____ LICENSED PROFESSIONAL ENGINEER LIC. NO. 18520 DATE 6/18/12

STATE PROJ. NO. 1901-148 (T.H. 13) SHEET NO. 25 OF 442 SHEETS

PLOTTED/REVISED: 12-JUN-2012 13:28
DISTRICT #: METRO
IPLOT NAME: d190148_tb5
FILENAME: Projects/DM_ROS/013/1901/148/Design/PlanSheets/Tabulations/d190148_tb.dgn

AGGREGATE G

STATION TO STATION	LOCATION	AGGREGATE BASE (CV) CLASS 6	AGGREGATE SHOULDERING (CV) CLASS 3	REMARKS
		CU YD	CU YD	
INTERCHANGE QUANTITY				
13EB				
664+64 TO 690+00	LT/RT	2445		
691+00 TO 714+50	LT/RT	4145		
677+15 TO 717+44	LT/RT		2296	
BYPASS 1 & 2	LT		121	
BYPASS 3 & 4	LT		59	
BYPASS 5 & 6	LT		143	
BYPASS 7	RT		52	
BYPASS 8	RT		47	
BYPASS 9	LT		216	
SHOULDER	RT		238	
NBCSAH5				
105+50 TO 111+88	LT/RT	2227		
113+50 TO 124+20	LT/RT	2367		
117+60 TO 118+97	LT		39	
CSAH5CONN				
1+50 TO 3+00	LT/RT	242		
126TH				
11+50 TO 28+00	LT/RT	1839		
NWLOOP1				
81+00 TO 87+00	LT/RT	428	263	
NWRAMP				
70+50 TO 78+00	LT/RT	339	283	
FRONTCON1				
10+50 TO 15+00	LT/RT	314		
NWFRONT				
5+50 TO 7+50	LT/RT	521		
NEFRONT3				
5+59 TO 9+10	LT/RT	397		
SEFRONT				
31+00 TO 33+00	LT/RT	203		
37+50 TO 38+00	LT/RT	15		
DRIVE1				
10+10 TO 10+90	LT/RT	47		
DRIVE2				
10+30 TO 11+50	LT/RT	84		
SUB-TOTALS		15613	3757	
100% STATE QUANTITY				
13EB				
717+50 TO 724+00	LT/RT	924		
720+22 TO 721+73	LT		12	
724+00 TO 733+00	LT/RT	1209		
SUB-TOTALS		2133	12	
179-020-031 QUANTITY				
WILLIAMS				
40+50 TO 45+00	LT/RT	751		
CSAH5 TRAIL		194		①
SUB-TOTALS		945		
INTERCHANGE QUANTITY TOTALS		15613	3757	
100% STATE QUANTITY TOTALS		2133	12	
179-020-031 QUANTITY TOTALS		945		
TOTALS		18691	3769	

AGGREGATE SHOULDERING H

STATION TO STATION	LOCATION	AGGREGATE SHOULDERING CLASS 2
		CU YD
INTECHANGE QUANTITY		
13EB		
670+00 TO 683+14	LT	87
670+00 TO 677+15	RT	35
706+01 TO 714+44	LT	47
13WB		
644+64 TO 681+29	LT	107
664+64 TO 674+23	RT	61
707+47 TO 718+50	LT	71
707+47 TO 718+50	RT	71
100% STATE QUANTITY		
13EB		
714+44 TO 733+27	LT	105
719+50 TO 733+27	RT	77
13WB		
718+50 TO 733+28	LT	82
718+50 TO 733+28	RT	82
INTECHANGE QUANTITY TOTAL		479
100% STATE QUANTITY TOTAL		346
TOTAL		825

NOTES:

① CSAH5 STATIONS; 105+96 TO 110+99 AND 117+65 TO 123+11. UNDER THE PROPOSED TRAIL.

AGGREGATE
AGGREGATE SHOULDERING

SHEET 6 OF 20

S.P. 179-020-031 S.P. 019-605-028

TABULATIONS

DRAWN BY: MRS CHECKED BY: HS CERTIFIED BY LICENSED PROFESSIONAL ENGINEER LIC. NO. 18520 DATE 6/18/12

STATE PROJ. NO. 1901-148 (T.H. 13) SHEET NO. 26 OF 442 SHEETS

DISTRICT #: METRO
IPLOT NAME: d1901148_tb15
FILENAME: Projects/DM_ROS/013/1901/148/Design/PlanSheets/Tabulations/d1901148_tb.dgn
PLOTTED/REVISED: 12-JUN-2012 13:30

BITUMINOUS ①

I

STATION TO STATION	LOCATION	2360 TYPE SP 12.5 WEARING COURSE MIXTURE (SPWEB540F)			2360 TYPE SP 12.5 WEARING COURSE MIXTURE (SPWEB340C)			2360 TYPE SP 12.5 NON WEARING COURSE MIXTURE (SPNWB430B)			NOTES
		TOTAL AREA SQ YD	MIX TON	DEPTH INCH	TOTAL AREA SQ YD	MIX TON	DEPTH INCH	TOTAL AREA SQ YD	MIX TON	DEPTH INCH	
INTERCHANGE QUANTITY											
NBCSAH5											
102+16 TO 103+00	12'RT TO VAR RT	56	13	4.00				56	9	3.00	
103+00 TO 104+47	69'LT TO 46'LT	329	79	4.00				329	56	3.00	
103+00 TO 104+82	12'RT TO 24'RT	243	55	4.00				243	41	3.00	
103+00 TO 111+39	0' TO 12'RT	1119	253	4.00				1119	190	3.00	
103+00 TO 111+39	0' TO 12'LT	1119	253	4.00				1119	190	3.00	
103+00 TO 104+93	12'LT TO 24'LT	257	58	4.00				257	44	3.00	
103+00 TO 111+39	34'LT TO 55'LT	1119	253	4.00				1119	190	3.00	
104+47 TO 111+39	46'LT TO 67'LT	923	209	4.00				923	156	3.00	
104+82 TO 106+35	12'RT TO VAR RT	506	114	4.00				506	86	3.00	
104+62 TO 107+43	58'LT TO VAR LT	262	59	4.00				262	44	3.00	
104+93 TO 106+14	12'LT TO 34'LT	296	67	4.00				296	50	3.00	
106+43 TO 111+24	58'LT TO 78'LT	641	145	4.00				641	109	3.00	
111+24 TO 111+39	66'LT TO 81'LT	21	5	4.00				21	4	3.00	
106+14 TO 108+99	23'LT TO 35'LT	380	86	4.00				380	64	3.00	
108+99 TO 110+78	35'LT TO VAR LT	120	27	4.00				120	20	3.00	
106+35 TO 106+84	12'RT TO 20'RT	44	10	4.00				44	7	3.00	
106+84 TO 111+05	12'RT TO VAR RT	529	120	4.00				529	90	3.00	
108+31 TO 110+08	70'LT TO VAR LT	240	54	4.00				240	41	3.00	
113+61 TO 122+60	12'RT TO 0'	1199	271	4.00				1199	203	3.00	
113+63 TO 124+20	0' TO 12'LT	1409	319	4.00				1409	239	3.00	
113+65 TO 113+75	12'LT TO 24'LT	12	3	4.00				12	2	3.00	
113+75 TO 116+48	12'LT TO 24'LT	364	82	4.00				364	62	3.00	
113+68 TO 116+48	34'LT TO VAR LT	292	66	4.00				292	50	3.00	
113+70 TO 124+20	46'LT TO 58'LT	1400	316	4.00				1400	237	3.00	
113+72 TO 120+35	58'LT TO 70'LT	884	200	4.00				884	150	3.00	
113+74 TO 115+60	70'LT TO VAR LT	390	88	4.00				390	66	3.00	
115+60 TO 116+98	70'LT TO 76'LT	92	21	4.00				92	16	3.00	
116+96 TO 118+05	70'LT TO 76'LT	73	16	4.00				73	12	3.00	
113+76 TO 114+96	12'RT TO VAR RT	80	18	4.00				80	14	3.00	
114+96 TO 116+36	22'RT TO 12'RT	156	35	4.00				156	26	3.00	
116+36 TO 118+16	12'RT TO VAR RT	432	98	4.00				432	73	3.00	
116+48 TO 117+78	12'LT TO 46'LT	387	88	4.00				387	66	3.00	
117+78 TO 121+07	46'LT TO VAR LT	360	81	4.00				360	61	3.00	
118+05 TO 120+35	70'LT TO VAR LT	307	69	4.00				307	52	3.00	
118+91 TO 120+11	12'LT TO VAR LT	80	18	4.00				80	14	3.00	
120+11 TO 124+20	12'LT TO 24'LT	545	123	4.00				545	92	3.00	
120+34 TO 122+53	54'LT TO VAR LT	457	103	4.00				457	77	3.00	
122+53 TO 124+20	46'LT TO VAR LT	769	174	4.00				769	130	3.00	
122+60 TO 124+20	0' TO VAR LT	659	149	4.00				659	112	3.00	
123+00 TO 124+20	24'LT TO 34'LT	133	30	4.00				133	23	3.00	
CSAH5CONN											
1+42 TO 3+63	VAR	960	217	4.00						3.00	
126CON											
11+50 TO 18+62	19'LT to 18'RT				2927	827	5.00				
18+62 TO 18+92	19'LT TO VAR LT				134	38	5.00				
18+92 TO 21+44	25'RT TO 19'LT				1204	340	5.00				
12+73 TO 13+14	19'RT TO VAR RT				70	20	5.00				
13+33 TO 13+88	19'RT TO VAR RT				48	13	5.00				
23+44 TO 28+70	18'RT TO 19'LT				2162	611	5.00				
23+44 TO 25+82	19'LT TO 25'LT				159	45	5.00				
25+82 TO 26+72	19'LT TO VAR LT				30	8	5.00				
NWFRONT											
005+28 TO 007+50	18'RT TO VAR LT				1380	312	4.00				
DRIVE2											
10+39 TO 11+50	12'RT TO 12'LT				296	67	4.00				

BITUMINOUS ①

I

STATION TO STATION	LOCATION	2360 TYPE SP 12.5 WEARING COURSE MIXTURE (SPWEB540F)			2360 TYPE SP 12.5 WEARING COURSE MIXTURE (SPWEB340C)			2360 TYPE SP 12.5 NON WEARING COURSE MIXTURE (SPNWB430B)			NOTES
		TOTAL AREA SQ YD	MIX TON	DEPTH INCH	TOTAL AREA SQ YD	MIX TON	DEPTH INCH	TOTAL AREA SQ YD	MIX TON	DEPTH INCH	
DRIVE1											
10+00 TO 10+75	11'LT TO VAR RT				177	40	4.00				
FRONTCON											
10+43 TO 10+74	24'LT TO VAR LT				51	11	4.00				
10+43 TO 11+74	12'LT TO 24'LT				175	39	4.00				
10+43 TO 11+74	0' TO 12'LT				175	39	4.00				
10+43 TO 11+08	8'RT TO VAR RT				173	39	4.00				
10+74 TO 15+20	24'LT TO 13'LT				661	149	4.00				
11+08 TO 13+64	8'RT TO VAR RT				494	112	4.00				
11+20 TO 13+06	8'RT TO VAR RT				66	15	4.00				
11+27 TO 13+06	12'LT TO VAR LT				152	34	4.00				
11+27 TO 13+06	24'LT TO VAR LT				152	34	4.00				
13+64 TO 15+20	13'LT TO 0'				231	52	4.00				
15+20 TO 16+07	VAR				333	75	4.00				
NEFRONT2											
26+73 TO 29+12	0' TO 16'RT				438	99	4.00				
26+73 TO 29+12	0' TO VAR LT				478	108	4.00				
NEFRONT3											
5+12 TO 9+24	VAR				1887	426	4.00				
9+16 TO 9+98	VAR RT				174	39	4.00				
9+33 TO 9+63	VAR LT				85	19	4.00				
SEFRONT											
30+66 TO 30+91	12'RT TO VAR RT				40	9	4.00				
30+66 TO 31+71	0' TO 12'RT				140	32	4.00				
30+66 TO 64+50	13'LT TO 0'				4888	1105	4.00				
30+91 TO 64+50	25'RT TO 6'RT				5121	1157	4.00				
31+71 TO 32+65	12'RT TO VAR RT				62	14	4.00				
VALLEYDR											
5+00 TO 6+54	VAR				256	58	4.00				

NOTES:

① 1/4" ADDED TO THE FIRST LIFT PLACED FOR COMPUTATIONAL PURPOSES.

BITUMINOUS PAVEMENT

S.P. 179-020-031 S.P. 019-605-028

SHEET 7 OF 20

TABULATIONS

DRAWN BY: GLJ | CHECKED BY: HS | CERTIFIED BY _____ LICENSED PROFESSIONAL ENGINEER LIC. NO. 18520 DATE 6/18/12

STATE PROJ. NO. 1901-148 (T.H. 13) SHEET NO. 27 OF 442 SHEETS

DISTRICT #: METRO
IPLOT NAME: d1901148_tb
FILENAME: Projects/DM_ROS/013/1901/148/Design/PlanSheets/Tabulations/d1901148_tb.dgn
PLOTTED/REVISED: 13-JUN-2012 08:12

BITUMINOUS ①

STATION TO STATION	LOCATION	2360 TYPE SP 12.5 WEARING COURSE MIXTURE (SPWEB540F)			2360 TYPE SP 12.5 WEARING COURSE MIXTURE (SPWEB340C)			2360 TYPE SP 12.5 NON WEARING COURSE MIXTURE (SPNWB430B)			NOTES
		TOTAL AREA SQ YD	MIX TON	DEPTH INCH	TOTAL AREA SQ YD	MIX TON	DEPTH INCH	TOTAL AREA SQ YD	MIX TON	DEPTH INCH	
13EB											
657+00 TO 658+70	12' LT TO VAR LT	2183	771	6.00							BYPASS 1 & 2
716+70 TO 722+20	12' LT TO VAR LT	1066	376	6.00							BYPASS 3 & 4
738+20 TO 744+21	12' LT TO VAR LT	2568	871	6.00							BYPASS 5 & 6
13WB											
656+78 TO 689+29	24' LT TO 77' LT	4291	1455	6.00							SHOULDER
690+87 TO 699+38	12' LT TO VAR LT	841	297	6.00							BYPASS 8
695+00 TO 705+00	VAR LT TO VAR RT	3890	1374	6.00							BYPASS 9
709+41 TO 718+61	12' LT TO VAR LT	932	316	6.00							BYPASS 7
S.P.179-020-031 QUANTITY											
EBWIL											
40+11 TO 40+31	12'RT TO VAR RT	37	8	4.00				37	6	3.00	
40+11 TO 45+30	0' TO 12'RT	692	156	4.00				692	117	3.00	
40+12 TO 40+33	0' TO 11'LT	29	7	4.00				29	5	3.00	
40+12 TO 42+12	12'LT TO VAR LT	265	60	4.00				265	45	3.00	
40+13 TO 45+30	36'LT TO 33'LT	689	156	4.00				689	117	3.00	
40+14 TO 40+48	36'LT TO VAR LT	74	17	4.00				74	13	3.00	
40+31 TO 44+83	24'RT TO 12'RT	603	136	4.00				603	102	3.00	
40+48 TO 44+88	37'LT TO 57'LT	587	133	4.00				587	99	3.00	
41+60 TO 42+20	0' TO VAR LT	40	9	4.00				40	7	3.00	
42+11 TO 42+79	19'LT TO VAR LT	48	11	4.00				48	8	3.00	
42+20 TO 42+80	12'LT TO VAR LT	40	9	4.00				40	7	3.00	
42+20 TO 45+30	12'LT TO 0'	413	93	4.00				413	70	3.00	
42+80 TO 45+30	12'L TO 24'LT	333	75	4.00				333	57	3.00	
44+83 TO 45+30	12'RT TO VAR RT	104	24	4.00				104	18	3.00	
44+88 TO 45+30	45'LT TO VAR LT	79	18	4.00				79	13	3.00	
45+13 TO 45+30	24'LT TO VAR LT	17	4	4.00				17	3	3.00	
INTERCHANGE QUANTITY TOTALS		35415	9904		24486	5986		18684	3167		
S.P.179-020-031 QUANTITY TOTALS		4050	916					4050	687		
PROJECT TOTALS		39465	10820		24486	5986		22734	3854		

NOTES:

① 1/4" ADDED TO THE FIRST LIFT PLACED FOR COMPUTATIONAL PURPOSES.

BITUMINOUS PAVEMENT

SHEET 8 OF 20

S.P. 179-020-031 S.P. 019-605-028

TABULATIONS

DRAWN BY: MRS CHECKED BY: HS CERTIFIED BY LICENSED PROFESSIONAL ENGINEER LIC. NO. 18520 DATE 6/18/12

STATE PROJ. NO. 1901-148 (T.H. 13) SHEET NO. 28 OF 442 SHEETS

DISTRICT #: METRO
IPLOT NAME: d1901148_tb
FILENAME: Projects/DM_ROS/013/1901/148/Design/PlanSheets/Tabulations/d1901148_tb.dgn
PLOTTED/REVISED: 13-JUN-2012 08:13

CONCRETE PAVEMENT, DOWEL BARS — J

STATION TO STATION	LOCATION	CONCRETE PAVEMENT 11.0"	CONCRETE PAVEMENT 8.5"	CONCRETE PAVEMENT 7.0"	DOWEL BAR STAINLESS STEEL 1.5"	DOWEL BAR STAINLESS STEEL 1.25"	NOTES
		SQ. YD.	SQ. YD.	SQ. YD.	EACH	EACH	
INTERCHANGE QUANTITIES							
13EB							
670+00 TO 717+44	0' TO 12'RT	6325			3479		
670+00 TO 717+44	0' TO 12'LT	6325			3479		
670+00 TO 683+14	12'LT TO 16'LT	584			283		
670+00 TO 675+95	12'RT TO 22RT			661			
675+95 TO 681+50	12'RT TO VAR RT	1222			703		
681+50 TO 699+25	12'RT TO 22'RT			1972			
683+14 TO 685+92	12'LT TO VAR LT	328			180		
685+92 TO 714+83	12'LT TO 20'LT	2570			1349		
699+25 TO 707+08	12'RT TO VAR RT	1463			992		
707+08 TO 712+08	12'RT TO 20'RT	444			300		
712+08 TO 717+44	12'RT TO 20'RT			476			
714+83 TO 717+44	12'LT TO 16'LT	116			52		
13WB							
664+64 TO 718+50	0' TO 12'RT	7181			3950		
664+64 TO 718+50	0' TO 12'LT	7181			3950		
664+64 TO 703+86	12'RT TO 16'RT	1743					
670+03 TO 674+23	12'LT TO VAR LT	327			168		
674+23 TO 679+50	12'LT TO 26'LT	820			457		
679+50 TO 681+29	12'LT TO VAR LT	383			215		
686+98 TO 689+28	12'LT TO VAR LT	553			460		
689+28 TO 718+50	12'LT TO 24'LT	3896			2143		
664+64 TO 670+03	12'LT TO 22'LT			599			
670+03 TO 671+08	12'LT TO VAR 'LT			93			
671+08 TO 679+50	12'LT TO 32'LT			93			
688+04 TO 689+28	32'LT TO VAR LT			54			
689+28 TO 710+63	24'LT TO 32'LT			1898			
703+86 TO 707+47	12'RT TO VAR RT	335			192		
707+47 TO 718+50	12'RT TO 16'RT	490			221		
710+63 TO 718+50	24'LT TO 34'LT			874			
SWRAMP							
50+00 TO 58+43	6'LT TO 6'RT		1124			618	
53+73 TO 55+53	6'LT TO VAR LT		120			72	
55+53 TO 58+43	6'LT TO 18'LT		387			213	
58+43 TO 58+57	6'LT TO VAR LT		28			3	
58+43 TO 58+71	6'RT TO VAR RT		39			3	
NWRAMP							
70+18 TO 78+75	0' TO 6'LT		571			286	
70+18 TO 71+30	0' TO VAR RT		301			30	
71+30 TO 74+24	0' TO VAR RT		346			176	
74+24 TO 78+75	0' TO 8'RT		401			210	
77+53 TO 80+53	8'RT TO 14'RT			200		100	
NWLOOP1							
81+13 TO 87+51	6'LT TO 12'RT		1276			723	
82+04 TO 84+10	6'LT TO VAR LT		269			165	
84+10 TO 85+24	6'LT TO 32'LT		304			175	
85+24 TO 85+78	6'LT TO VAR LT		229			20	
NWLOOP2							
86+07 TO 87+17	12'LT TO 12'RT		293			169	
86+07 TO 87+17	12'RT TO 20'RT		98			51	

CONCRETE PAVEMENT, DOWEL BARS — J

STATION TO STATION	LOCATION	CONCRETE PAVEMENT 11.0"	CONCRETE PAVEMENT 8.5"	CONCRETE PAVEMENT 7.0"	DOWEL BAR STAINLESS STEEL 1.5"	DOWEL BAR STAINLESS STEEL 1.25"	NOTES
		SQ. YD.	SQ. YD.	SQ. YD.	EACH	EACH	
SERAMP							
60+12 TO 61+65	VAR LT TO VAR RT		547			316	
61+65 TO 62+59	6'LT TO 18'RT		251			144	
62+59 TO 67+39	6'LT TO VAR LT		1117			640	
67+39 TO 68+56	6'RT TO 6'LT		156			86	
100% STATE QUANTITIES							
13EB							
717+44 TO 733+27	0' TO 12'LT	2111				1161	
717+44 TO 733+27	0' TO 12'RT	2111				1161	
717+44 TO 733+27	12'L TO 16'LT	704				317	
719+58 TO 724+81	12'RT TO VAR RT	684				523	
731+75 TO 733+26	12'RT TO VAR RT	247				160	
717+44 TO 720+86	VAR RT TO 22'RT			351			
724+87 TO 731+75	12'RT TO 20'RT			764			
13WB							
718+50 TO 733+28	0' TO 12'LT	1971				1084	
718+50 TO 733+28	0' TO 12'RT	1971				1084	
718+50 TO 733+28	12'RT TO 16'RT	657				296	
718+50 TO 720+03	12'LT TO 24'LT	204				112	
720+03 TO 721+59	12'LT TO VAR LT	293				177	
731+65 TO 733+33	12'LT TO VAR LT	367				212	
718+50 TO 720+03	24'LT TO VAR LT			112			
721+59 TO 731+65	12'LT TO 22'LT			1118			
INTERCHANGE QUANTITY TOTALS		42286	7857	6920	22573	4984	
100% STATE QUANTITY TOTALS		11320		2345	0	6287	
PROJECT TOTALS		53606	7857	9265	22573	11271	

BRIDGE APPROACH PANELS — K

BRIDGE NO.	DIRECTIONAL END	BRIDGE APPROACH PANELS	NOTES
		SQ. YD.	
19036	SOUTH	521	
19036	NORTH	226	
INTERCHANGE QUANTITY TOTALS		747	

CONCRETE PAVEMENT
BRIDGE APPROACH PANEL

S.P. 179-020-031 S.P. 019-605-028

SHEET 9 OF 20

TABULATIONS

DRAWN BY: GLJ | CHECKED BY: HS | CERTIFIED BY _____ LICENSED PROFESSIONAL ENGINEER LIC. NO. 18520 DATE 6/18/12

STATE PROJ. NO. 1901-148 (T.H. 13) SHEET NO. 29 OF 442 SHEETS

DISTRICT #: METRO
IPLOT NAME: d190148_tb
FILENAME: Projects/DM_ROS/013/1901/148/Design/PlanSheets/Tabulations/d190148_tbdgn
PLOTTED/REVISED: 12-JUN-2012 13:41

PEDESTRIAN RAMPS ①

L

LOCATION	EXCAVATION COMMON	AGGREGATE BASE CLASS 6	6" CONCRETE WALK	TRUNCATED DOMES RECTANGULAR 2' WIDTH	TRUNCATED DOMES 20' RADIUS	TRUNCATED DOMES 30' RADIUS	TRUNCATED DOMES 45' RADIUS	TRUNCATED DOMES 50' RADIUS	TRUNCATED DOMES 60' RADIUS	NOTES
	CU YD	CU YD	SQ FT	SQ FT	SQ FT	SQ FT	SQ FT	SQ FT	SQ FT	
INTERCHANGE QUANTITIES										
SEFRONT										
SOUTH	7	4	219					24		
WILLIAMS DR.										
SOUTH	5	3	154					24		
NORTH	5	2	124					24		
SERAMP										
ISLAND	5	3	163	20						
NORTH	3	2	110	10						
FRONTCON										
SOUTH	4	2	134				16			
S.P. 179-020-031 QUANTITIES										
SEFRONT										
NORTH		4	207					24		
SERAMP										
SOUTH		2	128	10						
FRONTCON										
NORTH		2	94						12	
126CON										
SE QUAD.	3	2	90						14	
NE QUAD.	5	3	147					20		
NW QUAD.	4	2	123						12	
WILLIAMS DR. ENT.										
EAST	3	2	91		12					
WEST	2	1	70		14					
MORGAN AVE										
SOUTH	3	2	110	6	6					
NORTH	5	3	167			14				
INTERCHANGE QUANTITY TOTALS	29	16	904	30			16	72		
S.P. 179-020-031 QUANTITY TOTALS	39	23	1227	16	32	14		44	38	
PROJECT TOTALS	68	39	2131	46	32	14	16	116	38	

NOTES:

① FOR DETAILS, SEE SHEET NO. 218 TO 228.

② PROPOSED CITY WATERMAIN.

③ ENTIRE RAMP FROM STA 52+00 TO 58+50 WILL REQUIRE SUPPLEMENTAL PAVEMENT REINFORCEMENT DUE TO THE 72" RCP IN THE CENTER OF THE RAMP.

SUPPLEMENTAL PAVEMENT REINFORCEMENT

M

LOCATION	STRUCTURE TO STRUCTURE	NO. OF PANELS	REINFORCEMENT BARS NO. 13	REINFORCEMENT BARS NO. 16	NOTES
		EACH	POUND	POUND	
INTERCHANGE QUANTITIES					
13EB					
681+50	5074	1	81	440	
683+50	5406 TO 5408	3	243	1683	
683+80	5069 TO 5049	1	81	561	
686+90	5067 TO 5048	1	81	455	
689+00	5065 TO 5047	1	81	455	
691+00	5060 TO 5046	1	81	440	
699+60	5119 TO 5120	3		2325	
701+20	5055 TO 5041	1		723	
702+75	5052 TO 5040	1		642	
706+65		2	132	980	②
709+30	5106 TO 5019	1		536	
13WB					
665+05	5085 TO 5086	1	81	440	
681+50	5076 TO 5077	1	81	440	
683+50	5406 TO 5408	3	243	1320	
691+10	5029 TO 5030	2	162	1254	
699+50	5119 TO 5120	3	243	1881	
706+40		2	132	1496	②
709+10	5016 TO 6007	1	81	627	
NWRAMP					
71+75	5226 TO 5227	1	268		
76+45	5095 TO 5408	2	300		
78+50	5077 TO 6008	1	262		
NWLOOP1					
81+95	5093 TO 5094	2	460		
84+90	5228 TO 5229	1	636		
86+00	5233 TO 5234	2	460		
SWRAMP					
	5154 TO 5406		12640		③
100% STATE QUANTITIES					
13WB					
720+00	5010 TO 6005	1		627	
726+00	5005	1	81	440	
INTERCHANGE QUANTITY TOTALS			16829	16698	
100% STATE QUANTITY TOTALS			81	1067	
PROJECT TOTALS			16910	17765	

PEDESTRIAN RAMPS
SUPPLEMENTAL PAVEMENT REINFORCEMENT

S.P. 179-020-031 S.P. 019-605-028

SHEET 10 OF 20

TABULATIONS

DRAWN BY: GLJ CHECKED BY: HS CERTIFIED BY LICENSED PROFESSIONAL ENGINEER LIC. NO. 18520 DATE 7/26/12

STATE PROJ. NO. 1901-148 (T.H. 13) SHEET NO. 30 OF 442 SHEETS

DISTRICT #: METRO
IPLOT NAME: d190148_tbped
FILENAME: Projects/DM_ROS/013/1901/148/Design/PlanSheets/Tabulations/d190148_tbdgn
PLOTTED/REVISED: 26-JUL-2012 13:56

CURB & GUTTER AND WALK

N

STATION TO STATION	LOCATION	CURB & GUTTER DESIGN B424	D424	B612	B618	B624	4" CONCRETE WALK	6" CONCRETE WALK	3" BIT. WALK ①	6" CONCRETE DRIVEWAY PAVEMENT	8" CONCRETE DRIVEWAY PAVEMENT	NOTES
		LIN FT	LIN FT	LIN FT	LIN FT	LIN FT	SQ FT	SQ FT	SQ FT	SQ YD	SQ YD	
INTERCHANGE QUANTITIES												
13EB												
654+62 TO 658+65	34'RT TO 57'RT				469							
677+15 TO 681+49	22'RT TO 52'RT		436									
681+29 TO 681+69	73'LT TO 82'LT							92				
681+29 TO 686+99	73'LT TO 64'LT	568										
681+50 TO 681+57	24'RT TO 35'RT							80				
681+50 TO 699+25	24'RT	1775										
686+92 TO 686+99	69'LT TO 75'LT							89				
688+15 TO 710+84	72'LT TO 92'LT	2269										
690+88 TO 705+26	102'LT TO 74'LT						17702					
698+25 TO 699+25	38'RT TO 24'RT							398				
699+26 TO 706+14	52'RT TO 24'RT						10200					
705+08 TO 706+14	26'RT TO 22'RT		106									
706+14 TO 717+44	24'RT TO 22'RT	1130										
SWRAMP												
50+00 TO 58+43	8'RT		843									
50+00 TO 58+51	6'LT TO 20'LT		851									
50+01 TO 58+23	9'RT TO 12'RT						2466					
52+81 TO 58+21	8'LT TO 29'LT						2700					
58+21 TO 58+54	20'LT TO 31'LT						305					
SERAMP												
60+14 TO 60+19	31'LT TO 15'LT						38					
60+16 TO 60+22	44'RT TO 41'RT							16				
60+16 TO 60+51	41'RT TO 12'RT						436					
60+18 TO 60+20	10'RT TO 44'RT	83										
60+22 TO 68+56	14'LT TO 8'LT		833									
60+29 TO 65+25	12'LT TO 15'LT						3346					
60+88 TO 74+43	29'RT TO 8'RT		1355									
61+22 TO 68+56	30'RT TO 8'RT						9048					
NWLOOP1												
80+00 TO 88+10	14'RT	749										
81+13 TO 83+99	8'LT TO 32'LT		312									
85+90 TO 87+51	8'LT	167										
NWLOOP2												
84+00 TO 87+17	12'LT TO 14'LT					317	850					
86+07 TO 87+13	22'RT	106										
NWRAMP												
70+18 TO 73+54	8'LT					331						
70+55 TO 77+53	27'RT TO 10'RT		701									
70+83 TO 72+67	38'RT TO 52'RT			205								②
73+54 TO 78+75	8'LT		527									
DRIVE1												
10+02 TO 10+07	24'RT TO 14'RT					331	127					
DRIVE2												
10+28 TO 11+50	14'RT TO 13'RT				103							
10+28 TO 11+50	13'LT				139							
INTERCHANGE QUANTITY SUBTOTALS		6847	5964	205	711	979	47218	675				

CURB & GUTTER AND WALK

N

STATION TO STATION	LOCATION	CURB & GUTTER DESIGN B424	D424	B612	B618	B624	4" CONCRETE WALK	6" CONCRETE WALK	3" BIT. WALK ①	6" CONCRETE DRIVEWAY PAVEMENT	8" CONCRETE DRIVEWAY PAVEMENT	NOTES
		LIN FT	LIN FT	LIN FT	LIN FT	LIN FT	SQ FT	SQ FT	SQ FT	SQ YD	SQ YD	
INTERCHANGE QUANTITIES												
NBCSAH5												
102+15 TO 105+23	20'RT TO 43'RT						1797					
102+16 TO 105+39	14'RT TO 88'RT	360										
103+00 TO 104+90	32'LT TO 26'LT						887					
103+00 TO 104+93	32'LT	193										
103+00 TO 104+93	26'LT	193										
103+00 TO 105+03	76'LT TO 84'LT						1158					
103+00 TO 105+10	71'LT TO 115'LT	247										
104+90 TO 104+93	32'LT TO 26'LT							20				
105+84 TO 111+21	68'RT TO 88'RT	737										
105+90 TO 108+31	119'LT TO 72'LT	271										
105+97 TO 106+14	40'RT TO 60'RT				33							②
106+14 TO 106+17	20'LT TO 14'LT							20				
106+14 TO 111+39	20'LT TO 41'LT	527										
106+14 TO 111+39	14'LT	525										
106+17 TO 111+35	14'LT TO 40'LT						5258					
107+13 TO 107+62	52'RT TO 69'RT				69							②
108+13 TO 108+31	92'LT TO 76'LT	25										
108+18 TO 108+67	94'LT TO 82'LT										51	
108+27 TO 108+31	79'LT TO 72'LT							20				
108+45 TO 111+61	101'LT TO 108'LT	345										
108+68 TO 109+57	107'LT TO 130'LT			94								
111+05 TO 111+37	16'RT	32										
111+35 TO 111+39	40'LT TO 14'LT							88				
111+54 TO 111+51	153'LT TO 171'LT			18								
111+51 TO 111+68	171'LT TO 175'LT			17								
111+61 TO 111+80	29'RT TO 16'RT						176					
111+63 TO 111+81	22'RT TO 14'RT	21										
113+40 TO 115+36	16'RT TO 42'RT						1972					
113+56 TO 113+76	86'LT	20										
113+61 TO 116+90	14'RT TO 108'RT	385										
113+67 TO 116+84	25'LT TO 34'LT	319										
113+68 TO 116+80	25'LT TO 42'LT						2434					
113+68 TO 116+84	32'LT TO 41'LT	317										
113+76 TO 114+98	86'LT TO 93'LT	123										
115+36 TO 116+71	32'RT TO 42'RT								1297			
115+60 TO 115+63	82'LT TO 78'LT							15				
115+60 TO 116+88	78'LT TO 80'LT	130										
115+63 TO 116+88	78'LT TO 183'LT						5457					
116+80 TO 116+84	42'LT TO 34'LT							30				
116+83 TO 116+88	183'LT TO 186'LT							16				
117+49 TO 118+96	253'LT TO 84'LT						2803					
117+56 TO 123+20	14'RT TO 74'RT				632							
117+60 TO 117+64	30'LT TO 22'LT							30				
117+60 TO 123+00	30'LT TO 32'LT				540							
117+60 TO 123+00	14'LT TO 26'LT				542							
117+63 TO 123+14	113'LT TO 126'LT				620							
117+64 TO 122+97	14'LT TO 32'LT						4860					
123+00	26' LT TO 32' LT				6							
123+60 TO 124+20	120'LT TO 60'LT				94							
123+66 TO 124+20	64'RT TO 14'RT				82							
INTERCHANGE QUANTITY SUBTOTALS		11617	5964	334	3329	979	74020	914	1297		51	

NOTES:

① TYPE S.P. 12.5 WEARING COURSE MIXTURE (SPWEB340C).

② PARKING LOT.

CURB & GUTTER AND WALK

S.P. 179-020-031 S.P. 019-605-028

SHEET 11 OF 20

TABULATIONS

STATE PROJ. NO. 1901-148 (T.H. 13) SHEET NO. 31 OF 442 SHEETS

DRAWN BY: MRS CHECKED BY: HS CERTIFIED BY LICENSED PROFESSIONAL ENGINEER LIC. NO. 18520 DATE 6/18/12

PLOTTED/REVISED: 12-JUN-2012 13:42

DISTRICT #: METRO
IPLOT NAME: d1901148_tb
FILENAME: Projects/DM_ROS/013/1901/148/Design/PlanSheets/Tabulations/d1901148_tbdgn

CURB & GUTTER AND WALK

N

STATION TO STATION	LOCATION	CURB & GUTTER DESIGN B424	D424	B612	B618	B624	4" CONCRETE WALK	6" CONCRETE WALK	3" BIT. WALK ①	6" CONCRETE DRIVEWAY PAVEMENT	8" CONCRETE DRIVEWAY PAVEMENT	NOTES
		LIN FT	LIN FT	LIN FT	LIN FT	LIN FT	SQ FT	SQ FT	SQ FT	SQ YD	SQ YD	
INTERCHANGE QUANTITIES												
NWFRONT												
5+28 TO 6+81	18'RT TO 46'RT				167							
5+29 TO 6+97	20'LT TO 45'LT				157							
6+81 TO 7+45	46'RT TO 13'LT				165							
6+91 TO 7+31	26'LT TO 45'LT										86	
7+33 TO 7+45	45'LT TO 13'LT				36							
SEFRONT												
30+66 TO 34+65	15'LT TO 30'LT				384							
30+91 TO 33+19	27'RT TO 32'RT				247							
33+11 TO 33+36	14'RT TO 34'RT										56	
33+30 TO 36+31	15' RT TO 30' RT				118							
33+39 TO 33+79	26'RT TO 29'RT				61							
33+70 TO 33+97	14'RT TO 28'RT										39	
33+98 TO 35+06	28'RT TO 30'RT				127							
34+50 TO 34+87	13'LT TO 30'LT										51	
34+89 TO 36+52	30'LT TO 15'LT				180							
34+91 TO 35+29	13'RT TO 30'RT										51	
36+16 TO 36+31	13'RT TO 30'RT										51	
35+30 TO 36+31	15'RT TO 30'RT				118							
36+37 TO 36+52	13'LT TO 30'LT										44	
36+55 TO 41+48	30'RT TO 31'RT				490							
36+72 TO 37+13	15' LT TO 30'LT				60							
37+02 TO 37+36	13'LT TO 30'LT										46	
37+36 TO 37+97	30'LT TO 50'LT				114							
37+92 TO 38+23	14'LT TO 34'LT										71	
38+13 TO 60+00	69'LT TO 15'LT				2235							
41+33 TO 41+70	13'RT TO 33'RT										57	
41+72 TO 50+20	33'RT TO 45'RT				884							
41+72 TO 42+34	VAR RT						346					③
43+86 TO 44+03	15'RT TO 21'RT									11		
44+62 TO 44+80	15'RT TO 21'RT									12		
45+36 TO 45+52	15'RT TO 21'RT									11		
45+95 TO 46+21	15'RT TO 21'RT									17		
46+72 TO 46+95	15'RT TO 21'RT									16		
47+51 TO 47+67	15'RT TO 21'RT									11		
48+93 TO 49+26	15'RT TO 21'RT									22		
50+00 TO 50+48	13'RT TO 34'RT										81	
50+49 TO 60+00	34'RT TO 15'RT				851							
126CON												
11+50 TO 12+76	20'RT TO 45'RT				160							
11+50 TO 21+50	20'LT				1004							
12+97 TO 13+42	50'RT TO 29'RT				82							
13+79 TO 15+65	29'RT TO 28'RT				205							
15+57 TO 15+91	18'RT TO 39'RT										58	
15+92 TO 21+44	29'RT TO 26'RT				524							
23+34 TO 28+70	26'LT TO 20'LT				536							
23+44 TO 28+70	20'RT				526							
FRONTCON												
10+43	1' RT TO 6' RT						20					
10+43 TO 11+20	1'RT				77							
10+43 TO 11+20	6'RT				77							
10+43 TO 11+20	1'RT TO 5'RT						270					
10+74 TO 15+20	30'LT TO 15'LT				492							
11+08 TO 15+20	28'RT TO 15'RT				374							
11+20	1' RT TO 6' RT						20					
15+20 TO 16+05	15'LT TO 18'LT				58							
15+20 TO 16+07	15'RT TO 18'RT				118							
INTERCHANGE FUNDS SUBTOTALS		11617	5964	334	13956	979	74676	914	1297	100	742	

NOTES:

① TYPE S.P. 12.5 WEARING COURSE MIXTURE (SPWEB340C).

② PARKING LOT.

③ FOR STEP DETAILS SEE SHEET NO. 94.

CURB & GUTTER AND WALK

N

STATION TO STATION	LOCATION	CURB & GUTTER DESIGN B424	D424	B612	B618	B624	4" CONCRETE WALK	6" CONCRETE WALK	3" BIT. WALK ①	6" CONCRETE DRIVEWAY PAVEMENT	8" CONCRETE DRIVEWAY PAVEMENT	NOTES
		LIN FT	LIN FT	LIN FT	LIN FT	LIN FT	SQ FT	SQ FT	SQ FT	SQ YD	SQ YD	
INTERCHANGE QUANTITIES												
NEFRONT2												
26+73 TO 27+74	18'RT TO 29'RT				115							
26+73 TO 29+12	18'LT TO 22'LT				224							
28+14 TO 29+12	50'RT TO 18'RT				76							
NEFRONT3												
5+34 TO 9+16	2'RT TO 43'RT				409							
5+72 TO 6+43	34'LT TO 38'LT				73							
6+38 TO 6+66	33'LT TO 38'LT										15	
6+67 TO 8+62	38'LT TO 42'LT				203							
8+58 TO 8+97	32'LT TO 43'LT										45	
8+98 TO 9+42	43'LT TO 34'LT				74							
9+16 TO 9+33	13'LT TO 8'RT										25	
9+13 TO 9+25	41'RT TO 26'RT									8		
9+26 TO 9+64	25'RT TO 21'RT				67							
VALLEYDR												
5+00 TO 6+54	30'RT TO 15'RT				164							
5+98 TO 5+80	15'RT TO 21'RT									12		
INTERCHANGE QUANTITIES SUB-TOTALS		11617	5964	334	15361	979	74676	914	1297	120	827	
100% STATE QUANTITIES												
13EB												
720+22 TO 721+73	90'LT TO 104'LT		153									
731+26 TO 731+75	21'RT		49									
731+32 TO 731+81	90'LT TO 89'LT		49									
731+44 TO 731+75	32'RT TO 23'RT		32									
731+49 TO 731+75	31'RT TO 21'RT							152				
731+66 TO 731+88	101'LT TO 99'LT		16									
731+74 TO 731+81	90'LT TO 99'LT							75				
731+79 TO 733+25	39'RT TO 27'RT		147									
731+88 TO 733+50	116'LT TO 89'LT		136									
722+75 TO 724+81	23' RT TO 45' RT		210									
S.P. 179-020-031 QUANTITIES												
EBWIL												
40+14 TO 45+03	31' RT TO 36'RT						2441					
40+33 TO 40+37	2'LT TO 11'LT							31				
40+37 TO 45+09	21'LT TO 32'LT						3070					
45+09 TO 45+13	26'LT TO 32'LT							20				
40+25 TO 43+34	59'LT TO 64'LT								3012			
43+75 TO 45+35	59'LT TO 84'LT								1590			
43+20 TO 43+71	57'LT TO 78'LT										91	
40+11 TO 44+83	45'RT TO 25'RT				483							
40+33 TO 45+13	2'LT TO 26'LT				482							
40+33 TO 45+13	11'LT TO 32'LT				481							
40+16 TO 43+40	81'LT TO 79'LT				354							
43+72 TO 44+88	78'LT TO 59'LT				127							
43+80 TO 45+23	77'LT TO 103'LT			160								②
NBCSAH5												
105+96 TO 110+99	39'RT TO 50'RT						5140					
117+65 TO 123+11	42'RT TO 32'RT								5378			
INTERCHANGE QUANTITY TOTALS		11617	5964	334	15361	979	74676	914	1297	120	827	
100% STATE QUANTITY TOTALS			792					227				
S.P. 179-20-031 TOTALS				160	1927		10651	51	9980		91	
PROJECT TOTALS		11617	6756	494	17288	979	85327	1192	11277	120	918	

S.P. 179-020-031 S.P. 019-605-028

CURB & GUTTER AND WALK
SHEET 12 OF 20

TABULATIONS

DRAWN BY: MRS CHECKED BY: HS CERTIFIED BY LICENSED PROFESSIONAL ENGINEER LIC. NO. 18520 DATE 7/26/12

STATE PROJ. NO. 1901-148 (T.H. 13) SHEET NO. 32 OF 442 SHEETS

PLOTTED/REVISED: 26-JUL-2012 14:00
DISTRICT #: METRO
IPLOT NAME: d1901148_tbcurb2
FILENAME: Projects/DM_ROS/013/1901/148/Design/PlanSheets/Tabulations/d1901148_tbdgn

CONCRETE MEDIAN BARRIER & GLARE SCREEN O

STATION TO STATION	LOCATION	DESIGN 8309 TYPE A	DESIGN TYPE 8309 TRANSITION	NOTES
		LIN FT	LIN FT	
INTERCHANGE QUANTITIES				
13WB				
674+74 TO 689+40	18' RT TO 16' RT	1466		
689+40 TO 689+76	16' RT TO 18' RT		36	
690+94 TO 691+30	16' RT TO 16' RT		36	
691+30 TO 714+32	16' RT TO 42' RT	2302		
INTERCHANGE QUANTITY TOTALS		3768	72	
PROJECT TOTALS		3768	72	

SUBSURFACE DRAINAGE 4 Q

ROADWAY	STATION TO STATION	LOCATION	6" PERF. PE PIPE DRAIN	6" TP PIPE DRAIN 3	6" PRECAST CONCRETE HEADWALL	NOTES
			LIN FT	LIN FT	EACH	
INTERCHANGE QUANTITIES						
13EB	689+00 TO 692+50	RT	350			5
13WB	688+50 TO 692+50	LT	400	50	1	
INTERCHANGE QUANTITY SUBTOTALS			750	50	1	
PROJECT TOTALS			750	50	1	

NOTES:

1. FLUORESCENT ORANGE
2. 50 LIN FT OF 60V-9322 PROVIDED TO CONNECT INPLACE CHAINLINK FENCE TO NOISEWALL 1.
3. OUTLET PIPE. TEE SECTIONS TO PERFORATED PIPES ARE CONSIDERED INCIDENTAL.
4. FOR DETAILS, SEE SHEET NO. 121 AND 122. USE SUBSURFACE DRAINS SUBCUT DRAIN TYPE.
5. DRAIN TO STRUCTURE NO. 5047.
6. PLACE RIGHT ADJACENT TO RWALL8. FOR DETAILS SEE SHEET NO. 97.
7. PLACE RIGHT ADJACENT TO RWALL3, SEE SHEET NO. 79.
8. FOR DETAILS, SEE SHEET 97 AND 98.
9. ONE GROUND, EVERY 91.5' BETWEEN THE CORK AND DOWEL JOINTS.
10. PLACE OVER BOX CULVERT TO PROTECT BOX CULVERT BARREL.

FENCING P

STATION	LOC.	REMOVE CHAINLINK FENCE	FURNISH AND INSTALL: WIRE FENCE DESIGN 32V-9322	ORNAMENTAL METAL RAILING 8	WIRE FENCE DESIGN 60V-9322	METAL BRACE ASSEMBLY	ELECTRICAL GROUND	ORNAMENTAL IRON FENCE	TEMPORARY FENCE 1	NOTES
		LIN FT	LIN FT	LIN FT	LIN FT	EACH	EACH	LIN FT	LIN FT	
INTERCHANGE QUANTITIES										
NBCSAH5										
102+56 TO 104+93	VAR RT								243	
105+87 TO 108+82	VAR RT								378	
118+13 TO 120+71	59' RT TO 59' RT								257	
SBCSAH5										
102+82 TO 104+84	VAR LT								204	
106+51 TO 109+18	VAR LT								282	
109+98 TO 111+10	VAR LT								146	
SEFRONT										
33+07 TO 36+30	VAR RT								440	
36+50 TO 50+04	VAR RT								1364	
50+64 TO 57+74	VAR RT	710			710	2	1			
58+30 TO 63+50	VAR LT	520			50	1	1			2
126CON										
13+93 TO 15+90	46' RT TO 50' LT	218								
23+25	160' LT				50	2	1			10
NWRAMP										
74+57 TO 79+61	VAR RT								1064	
FRONTCON										
10+59 TO 12+37	VAR LT								240	
SWRAMP										
50+00 TO 57+00	14' RT				700	2	2			7
56+55 TO 58+81	VAR RT								255	
RWALL1										
10+00 TO 23+76	CL			1376			15			9
RWALL5										
10+00 TO 13+66	CL		366				1			
RWALL6										
10+00 TO 13+87	CL		387				1			
SP-179-202-031 FUNDS										
EBWIL										
40+18 TO 45+03	VAR RT								498	
WBWIL										
43+76 TO 45+27	VAR LT								173	
43+83 TO 44+88								105		6
INTERCHANGE QUANTITY TOTALS		1448	753	1376	1510	7	22		4873	
SP-179-202-031 FUNDS TOTALS								105	671	
PROJECT-TOTALS		1448	753	1376	1510	7	22	105	5544	

CONCRETE MEDIAN BARRIER & GLARE SCREEN
SUBSURFACE DRAINAGE
FENCING

S.P. 179-020-031 S.P. 019-605-028 **SHEET 13 OF 20**

TABULATIONS

DRAWN BY: MRS | CHECKED BY: HS | CERTIFIED BY _____ LICENSED PROFESSIONAL ENGINEER LIC. NO. 18520 DATE 7/26/12 | STATE PROJ. NO. 1901-148 (T.H. 13) SHEET NO. 33 OF 442 SHEETS

PLOTTED/REVISED: 26-JUL-2012 14:09
DISTRICT: METRO
IPLOT NAME: d190l148_tbfno
FILENAME: Projects/DM_ROS/013/190l/148/Design/PlanSheets/Tabulations/d190l148_tbdgn

TRAFFIC BARRIER

R

SITE NO.	ROADWAY	STATION TO STATION	LOC.	ITEM INPLACE	SEE PLAN SHEET NO.	REMOVE				SALVAGE			INSTALL			FURNISH AND INSTALL						NOTES
						GUARDRAIL PLATE BEAM	ANCHORAGE ASSEMBLY PLATE BEAM	ECCENTRIC LOADER BCT	CABLE GUARDRAIL	GUARDRAIL ①	GUARDRAIL PLATE BEAM	ENERGY ABSORBING TERMINAL	GUARDRAIL ②	TRAFFIC BARRIER DESIGN B8338	ENERGY ABSORBING TERMINAL	DESIGN SPECIAL	TRAFFIC BARRIER DESIGN B8338	TRAFFIC BARRIER DESIGN BULLNOSE	ANCHORAGE ASSEMBLY PLATE BEAM	END TREATMENT TANGENT TERMINAL	END TREATMENT FLARED TERMINAL	
						LIN FT	EACH	EACH	LIN FT	LIN FT	LIN FT	EACH	LIN FT	LIN FT	EACH	ASSEMBLY	LIN FT	LIN FT	EACH	EACH	EACH	
INTERCHANGE QUANTITIES																						
1	13EB	682+30 TO 685+05	RT	B8338, ET 2000	204		1				225	1										
2	13WB	693+00 TO 703+00	LT	B8307, BCT	205		1	1		962												
3	13EB	694+90 TO 698+00	RT	3 CABLE	205				350													⑦
4	13WB	714+70 TO 721+45	LT	B8307, BCT	206	675	1															
100% STATE QUANTITIES																						
5	13EB	720+60 TO 722+60	RT	B8338, ET 2000	206																	③
6	13EB	732+60 TO 733+48	RT	B8397, BCT	207	50		1														
7	13EB	732+75 TO 733+50	LT	1 BEAM BULL NOSE	207	200																
INTERCHANGE QUANTITIES																						
10	13EB	669+95 TO 672+70	RT		211									225	1				1			④
11	SWRAMP	51+30 TO 52+80	LT		212								100						1	1		
12	CSAH5SB	113+88 TO 114+88	LT		212								25			25				1		⑤
13	CSAH5SB	119+05 TO 120+05	LT		217								25			25				1		⑤
14	13WB	705+05 TO 707+30	LT		213								175						1		1	
15	13WB	714+70 TO 721+45	LT		214								637				38		1			
100% STATE QUANTITIES																						
16	13EB	732+45 TO 733+45	RT		215											25	25			1		⑥
17	13EB	732+78 TO 733+50	LT		215											25	25	94				⑥
18	13WB	732+75 TO 733+50	LT		215												75		1			⑥
INTERCHANGE QUANTITY TOTALS						675	3	1	350	962	225	1	962	225	1	50	38		4	3	1	
100% STATE QUANTITY TOTALS						250		1								50	125	94	1	1		
PROJECT TOTALS						925	3	2	350	962	225	1	962	225	1	100	163	94	5	4	1	

NOTES:

① INCLUDES THE REMOVAL OF WOOD POSTS.

② INCLUDES THE FURNISH AND INSTALL OF STEEL POSTS.

③ LEAVE AS IS.

④ ET-2000 FROM SITE 1.

⑤ SEE STANDARD PLAN SHEET NO. 131 DOES NOT REQUIRE END POST.

⑥ F-BARRIER CONNECTION, SEE SHEET NO. 126.

⑦ REMOVE 2 ANCHORAGE ASSEMBLIES.

STORM DRAIN INLET PROTECTION S

STRUCTURE NO.	ALIGNMENT	STATION	OFFSET	STORM DRAIN INLET PROTECTION ① EACH	NOTES
INTERCHANGE QUANTITIES					
5013	13EB	717+00	31' LT	1	
5014	13EB	714+00	32' LT	1	
5015	13EB	711+00	30' LT	1	
5016	13EB	709+31	30' LT	1	
5017	13EB	708+00	26' LT	1	
5018	13EB	709+31	18' LT	1	
5019	13EB	709+31	18' LT	1	
5020	13WB	708+08	33' LT	1	
5021	13WB	705+97	33' LT	1	
5022	13WB	703+67	33' LT	1	
5023	13WB	701+37	33' LT	1	
5024	13WB	699+34	33' LT	1	
5025	13WB	697+18	33' LT	1	
5026	13WB	695+16	33' LT	1	
5027	13WB	693+38	33' LT	1	
5028	13WB	691+73	33' LT	1	
5029	13WB	691+04	33' LT	1	
5030	13WB	691+10	14' RT	1	
5031	13EB	715+60	40' RT	1	
5032	13EB	715+60	21' RT	1	
5033	13EB	712+79	21' RT	1	
5034	13EB	710+38	21' RT	1	
5035	13EB	708+74	21' RT	1	
5036	13EB	706+35	23' RT	1	
5037	13EB	706+51	32' RT	1	
5038	13EB	705+89	23' RT	1	
5039	13EB	705+65	24' RT	1	
5040	13EB	702+75	30' RT	1	
5041	13EB	701+22	34' RT	1	
5042	SERAMP	68+48	7' LT	1	
5043	13EB	696+08	23' RT	1	
5044	13EB	693+78	23' RT	1	
5045	13EB	692+49	23' RT	1	
5046	13EB	691+20	23' RT	1	
5047	13EB	689+03	23' RT	1	
5048	13EB	686+93	23' RT	1	
5049	13EB	683+80	23' RT	1	
5051	13EB	704+83	18' LT	1	
5052	13EB	702+73	18' LT	1	
5053	13WB	704+60	15' RT	1	
5054	13WB	701+02	14' RT	1	
5055	13EB	701+21	18' LT	1	
5056	13EB	599+53	18' LT	1	
5057	13EB	698+00	18' LT	1	
5058	13EB	695+11	18' LT	1	
5059	13EB	692+66	18' LT	1	
5060	13EB	691+18	18' LT	1	
5061	13WB	697+85	14' RT	1	
5062	13WB	695+00	14' RT	1	
5063	13WB	692+58	14' RT	1	
INTERCHANGE QUANTITY SUB-TOTALS				50	

STORM DRAIN INLET PROTECTION S

STRUCTURE NO.	ALIGNMENT	STATION	OFFSET	STORM DRAIN INLET PROTECTION ① EACH	NOTES
INTERCHANGE QUANTITIES					
5064	13WB	689+00	14' RT	1	
5064	13EB	689+03	18' LT	1	
5066	13WB	686+92	14' RT	1	
5067	13EB	686+92	18' LT	1	
5068	13WB	683+82	14' RT	1	
5069	13EB	683+81	22' LT	1	
5071	13EB	681+35	49' RT	1	
5072	SWRAMP	50+00	7' RT	1	
5073	SWRAMP	50+03	7' LT	1	
5074	13EB	681+53	23' RT	1	
5075	13WB	681+54	27' RT	1	
5076	13WB	681+54	14' RT	1	
5077	13WB	681+53	23' LT	1	
5078	13WB	678+49	14' RT	1	
5079	13EB	678+47	32' LT	1	
5080	13EB	674+75	39' LT	1	
5081	13EB	673+00	39' LT	1	
5082	13EB	671+50	41' LT	1	
5083	13EB	668+50	42' LT	1	
5084	13EB	665+04	46' LT	1	
5087	13WB	675+26	15' RT	1	
5088	13WB	674+76	14' RT	1	
5089	13WB	689+52	33' LT	1	
5090	13WB	688+99	33' LT	1	
5091	13WB	678+99	33' LT	1	
5092	NWLOOP1	80+72	13' RT	1	
5093	NWLOOP1	81+89	12' RT	1	
5094	13WB	685+50	50' LT	1	
5095	13WB	683+73	65' LT	1	
5097	13WB	683+75	23' LT	1	
5098	NWRAMP	77+57	22' LT	1	
5099	NWRAMP	77+51	9' RT	1	
5100	NWRAMP	77+52	26' RT	1	
5101	SEFRONT	58+23	14' LT	1	
5102	SEFRONT	58+23	14' RT	1	
5104	SEFRONT	54+90	14' LT	1	
5105	SEFRONT	50+91	25' RT	1	
5106	SEFRONT	52+92	14' RT	1	
5107	SEFRONT	52+98	14' LT	1	
5109	SEFRONT	50+49	28' RT	1	
5110	SEFRONT	50+70	14' RT	1	
5111	SEFRONT	51+35	14' RT	1	
5112	SEFRONT	51+63	14' RT	1	
5113	SEFRONT	50+20	27' RT	1	
5115	SEFRONT	51+35	14' LT	1	
5116	SEFRONT	51+63	14' LT	1	
5117	SEFRONT	43+50	14' RT	1	
5119	SEFRONT	43+10	14' LT	1	
5123	SEFRONT	37+86	14' LT	1	
5124	SEFRONT	37+86	14' RT	1	
INTERCHANGE QUANTITY SUB-TOTALS				100	

STORM DRAIN INLET PROTECTION S

STRUCTURE NO.	ALIGNMENT	STATION	OFFSET	STORM DRAIN INLET PROTECTION ① EACH	NOTES
INTERCHANGE QUANTITIES					
5125	SEFRONT	38+51	14' RT	1	
5126	SEFRONT	39+21	14' RT	1	
5127	SEFRONT	39+38	14' RT	1	
5128	SEFRONT	40+59	14' RT	1	
5129	SEFRONT	41+91	14' RT	1	
5131	SEFRONT	41+92	CL	1	
5132	SEFRONT	39+21	14' LT	1	
5133	SEFRONT	39+37	14' LT	1	
5134	SEFRONT	33+43	17' RT	1	
5135	SEFRONT	33+15	17' RT	1	
5137	SEFRONT	30+87	26' RT	1	
5139	SEFRONT	33+14	14' LT	1	
5140	SEFRONT	30+87	14' LT	1	
5141	NBCSAH5	103+52	25' RT	1	
5142	NBCSAH5	104+16	25' RT	1	
5143	NBCSAH5	104+77	25' RT	1	
5144	SEFRONT	30+40	59' RT	1	
5145	NBCSAH5	104+76	34' RT	1	
5146	NBCSAH5	106+78	21' RT	1	
5147	NBCSAH5	107+83	21' RT	1	
5148	NBCSAH5	108+63	25' RT	1	
5149	NBCSAH5	109+33	25' RT	1	
5150	NBCSAH5	110+37	25' RT	1	
5151	NBCSAH5	110+93	43' RT	1	
5152	SERAMP	60+46	9' LT	1	
5153	NBCSAH5	111+73	13' RT	1	
5154	SBCSAH5	111+93	37' LT	1	
5156	NBCSAH5	111+37	15' RT	1	
5158	SBCSAH5	104+01	20' LT	1	
5159	SBCSAH5	104+70	14' LT	1	
5160	SBCSAH5	104+86	19' LT	1	
5168	SBCSAH5	107+38	25' LT	1	
5172	SBCSAH5	107+93	25' LT	1	
5173	SBCSAH5	109+47	46' LT	1	
5174	SBCSAH5	109+45	37' LT	1	
5177	SBCSAH5	111+00	25' LT	1	
5179	SBCSAH5	112+02	29' LT	1	
5181	SBCSAH5	108+30	39' LT	1	
5182	SBCSAH5	108+59	40' LT	1	
5183	13WB	693+02	70' LT	1	
5185	FRONTCON1	12+94	21' RT	1	
5187	FRONTCON	13+01	15' LT	1	
5190	FRONTCON	11+65	36' LT	1	
5192	FRONTCON	11+00	38' LT	1	
5193	FRONTCON	10+83	38' LT	1	
5194	FRONTCON	10+49	43' LT	1	
5195	NBCSAH5	118+15	14' RT	1	
5196	NBCSAH5	118+48	14' RT	1	
5197	NBCSAH5	120+37	14' RT	1	
5198	NBCSAH5	122+04	14' RT	1	
INTERCHANGE QUANTITY SUB-TOTALS				150	

① FOR OPTIONS, SEE SHEET NO. 118.

STORM DRAIN INLET PROTECTION

S.P. 179-020-031 S.P. 019-605-028 **SHEET 15 OF 20**

TABULATIONS

DRAWN BY: MRS CHECKED BY: HS CERTIFIED BY LICENSED PROFESSIONAL ENGINEER LIC. NO. 18520 DATE 6/18/12

STATE PROJ. NO. 1901-148 (T.H. 13) SHEET NO. 35 OF 442 SHEETS

PLOTTED/REVISED: 12-JUN-2012 13:31
DISTRICT #: METRO
IPLOT NAME: d1901148_tb20
FILENAME: Projects/DM_ROS/013/1901/148/Design/PlanSheets/Tabulations/d1901148_tb.dgn

STORM DRAIN INLET PROTECTION (S)

STRUCTURE NO.	ALIGNMENT	STATION	OFFSET	STORM DRAIN INLET PROTECTION (1) EACH	NOTES
INTERCHANGE QUANTITIES					
5199	NBCSAH5	122+83	18' RT	1	
5201	126CON	23+36	20' RT	1	
5202	126CON	23+37	25' LT	1	
5206	SBCSAH5	113+83	25' RT	1	
5207	SBCSAH5	115+35	25' RT	1	
5208	SBCSAH5	116+41	15' RT	1	
5209	SBCSAH5	116+41	19' LT	1	
5210	SBCSAH5	116+94	19' LT	1	
5211	SBCSAH5	117+31	22' LT	1	
5213	SBCSAH5	118+35	26' LT	1	
5214	SBCSAH5	115+35	37' LT	1	
5215	SBCSAH5	120+50	24' LT	1	
5216	NBCSAH5	113+72	13' RT	1	
5217	NBCSAH5	115+26	25' RT	1	
5218	NBCSAH5	116+50	27' RT	1	
5219	NBCSAH5	116+58	31' RT	1	
5220	FRONTCON1	10+62	28' RT	1	
5221	FRONTCON1	10+82	22' RT	1	
5223	FRONTCON1	10+97	20' RT	1	
5225	NWRAMP	70+86	17' RT	1	
5226	NWRAMP	71+73	12' RT	1	
5228	NWRAMP	72+41	7' LT	1	
5229	NWLOOP1	84+93	13' RT	1	
5230	NWLOOP1	83+80	13' RT	1	
5231	NWLOOP1	82+74	13' RT	1	
5233	NWLOOP2	86+14	21' RT	1	
5234	NWLOOP1	86+09	12' RT	1	
5236	126CON	21+02	26' RT	1	
5237	126CON	21+71	32' RT	1	
5238	SBCSAH5	122+91	27' RT	1	
5239	126CON	20+85	26' RT	1	
5250	126CON	27+65	19' RT	1	
5251	126CON	27+65	12' LT	1	
5254	126CON	25+36	20' RT	1	
5255	126CON	25+36	26' LT	1	
5257	126CON	13+96	20' RT	1	
5258	NWFRONT	5+25	20' LT	1	
5259	NWFRONT	5+24	20' RT	1	
5260	126CON	13+33	20' RT	1	
5261	126CON	12+62	20' LT	1	
5262	126CON	11+83	20' LT	1	
5263	126CON	11+77	20' LT	1	
5265	126CON	11+86	20' RT	1	
5266	126CON	11+80	20' RT	1	
5267	DROVE2	10+31	13' RT	1	
5268	DRIVE2	10+31	13' LT	1	
5269	126CON	20+85	20' LT	1	
5270	126CON	20+91	20' LT	1	
5272	SBCSAH5	124+17	14' LT	1	
5273	NBCSAH5	124+19	14' RT	1	
INTERCHANGE QUANTITY SUB-TOTALS				200	

STORM DRAIN INLET PROTECTION (S)

STRUCTURE NO.	ALIGNMENT	STATION	OFFSET	STORM DRAIN INLET PROTECTION (1) EACH	NOTES
INTERCHANGE QUANTITIES					
5274	NEFRONT3	8+22	34' LT	1	
5275	NEFRONT3	8+22	9' RT	1	
5276	NEFRONT3	8+22	17' RT	1	
5277	NEFRONT3	5+8	1' RT	1	
5278	NEFRONT3	5+32	6' RT	1	
5279	NEFRONT3	5+78	34' LT	1	
5280	NEFRONT3	28+69	18' RT	1	
5292	SERAMP	62+45	7' LT	1	
5293	SERAMP	63+70	7' LT	1	
5294	SERAMP	64+74	7' LT	1	
5295	SERAMP	65+17	7' LT	1	
5296	SERAMP	65+34	7' LT	1	
5297	SWRAMP	57+13	19' LT	1	
5298	SWRAMP	55+55	19' LT	1	
5299	SWRAMP	53+77	7' LT	1	
5300	SWRAMP	52+30	7' LT	1	
5301	SWRAMP	51+05	7' LT	1	
5302	13EB	679+97	40' RT	1	
5303	13EB	678+32	29' RT	1	
5304	13EB	677+38	22' RT	1	
5305	13EB	677+17	21' RT	1	
5307	SEFRONT	44+87	14' LT	1	
5308	SEFRONT	44+87	14' RT	1	
5309	13WB	666+50	45' LT	1	
5310	13EB	660+00	106' RT	1	
5313	DRIVE2	10+31	CL	1	
5315	NBCSAH5	108+01	122' RT	1	
6010	SEFRONT	58+16	37' RT	1	
6013	SEFRONT	30+63	31' LT	1	
6015	NBCSAH5	108+00	122' RT	1	
6018	126CON	11+00	CL	1	
6020	NEFRONT2	28+69	21' LT	1	
6023	SBCSAH5	120+62	190' LT	1	
INTERCHANGE QUANTITY SUB-TOTALS				233	

STORM DRAIN INLET PROTECTION (S)

STRUCTURE NO.	ALIGNMENT	STATION	OFFSET	STORM DRAIN INLET PROTECTION (1) EACH	NOTES
100% STATE QUANTITIES					
5001	13EB	733+00	41' LT	1	
5002	13EB	731+00	42' LT	1	
5003	13EB	729+00	42' LT	1	
5004	13EB	727+50	42' LT	1	
5005	13EB	726+00	41' LT	1	
5006	13EB	724+50	39' LT	1	
5007	13EB	722+77	23' RT	1	
5008	13EB	722+76	36' LT	1	
5009	13EB	721+50	34' LT	1	
5010	13EB	720+18	34' LT	1	
5011	13WB	720+16	25' LT	1	
5012	13WB	720+08	25' LT	1	
6001	13EB	725+99	34' RT	1	
6005	13WB	719+97	25' LT	1	
S.P 179-020-031 QUANTITIES					
5165	EBWIL	44+62	25' RT	1	
5166	WBWIL	44+64	25' LT	1	
5167	EBWIL	44+63	25' RT	1	
5281	EBWIL	41+90	25' RT	1	
5282	EBWIL	40+91	25' RT	1	
5283	EBWIL	40+78	25' RT	1	
5284	EBWIL	40+37	25' RT	1	
5285	EBWIL	42+03	10' LT	1	
5288	WBWIL	40+83	25' LT	1	
5289	WBWIL	40+43	26' LT	1	
5290	WBWIL	40+82	13' RT	1	
5291	EBWIL	40+82	1' LT	1	
5401	SBCSAH5	111+48	44' LT	1	
5408	NWRAMP	76+42	9' RT	1	
INTERCHANGE QUANTITY TOTALS				233	
100% STATE QUANTITY TOTALS				14	
S.P. 179-020-031 QUANTITY TOTALS				14	
PROJECT TOTALS				261	

(1) FOR OPTIONS, SEE SHEET NO. 118.

STORM DRAIN INLET PROTECTION

S.P. 179-020-031 S.P. 019-605-028

SHEET 16 OF 20

TABULATIONS

DRAWN BY: MRS CHECKED BY: HS CERTIFIED BY Bernard J. Stout LICENSED PROFESSIONAL ENGINEER LIC. NO. 18520 DATE 6/18/12

STATE PROJ. NO. 1901-148 (T.H. 13) SHEET NO. 36 OF 442 SHEETS

DISTRICT #: METRO
IPLOT NAME: d1901148_tb21
FILENAME: Projects/DM_ROS/013/1901/148/Design/PlanSheets/Tabulations/d1901148_tb.dgn
PLOTTED/REVISED: 12-JUN-2012 13:31

TEMPORARY EROSION CONTROL TABULATION (T)

STATION	LOCATION	SEEDING	SEED MIXTURE 150 ③	FERTILIZER TYPE 1 ②	EROSION CONTROL BLANKET CAT. 3 ①	EROSION CONTROL BLANKET CAT. 4 ⑤	SILT FENCE TYPE HEAVY DUTY	FILTER LOG TYPE COMPOST LOG	HYDRAULIC SOIL STABILIZER TYPE 5 ④	NOTES
		ACRE	POUND	POUND	SQ YD	SQ YD	LIN FT	LIN FT	POUND	
INTERCHANGE QUANTITIES										
13EB										
696+00 TO 706+00	VAR RT	1.0	40	200	3729	1111				⑥
683+00 TO 707+00	VAR LT	1.5	60	300	4593	2667				⑦
		1.5	60	300			500		3150	⑧
654+92 TO 655+06	32' RT TO 46' RT							68		
672+00	34' RT TO 46' RT							12		
674+02	34' RT TO 42' RT							8		
676+00	34' RT TO 51' RT							17		
678+00	40' RT TO 60' RT							20		
709+00	22' LT TO 36' LT							14		
710+15	22' LT TO 40' LT							18		
13WB										
665+00	34' LT TO 53' LT							19		
667+00	34' LT TO 51' LT							17		
669+00	34' LT TO 54' LT							20		
671+00	34' LT TO 57' LT							24		
673+00	40' LT TO 65' LT							25		
675+00	44' LT TO 68' LT							24		
677+00	44' LT TO 66' LT							22		
679+00	44' LT TO 68' LT							24		
685+00	24' LT TO 151' LT							127		
705+00 TO 708+79	35' LT TO 38' LT							379		
718+50 TO 721+55	51' LT TO 43' LT							762		
126CON										
12+00 TO 19+44	57' LT TO VAR LT							752		
NWFRONT										
5+44 TO 7+21								223		
NEFRONT2										
27+15 TO 29+21	30' LT TO 34' LT							179		
SEFRONT										
50+78 TO 60+29	22' RT TO 34' RT							949		
NWRAMP										
74+55 TO 77+43	VAR RT							285		
NWLOOP1										
80+00 TO 84+70	VAR RT							300		
81+37 TO 82+78	VAR RT							163		
⑩									4850	
100% STATE QUANTITIES										
TH13EB										
721+00	VAR LT							10		
724+00	VAR LT							10		
727+00	VAR LT							10		
730+00	VAR LT							10		
⑩									2000	
INTERCHANGE QUANTITY TOTALS		4	160	800	8322	3778	500	4451	8000	
100% STATE QUANTITY TOTALS								40	2000	
PROJECT TOTALS		4	160	800	8322	3778	500	4491	10000	

SUBGRADE PREPARATION (U)

ROADWAY	STATION TO STATION	SUBGRADE PREPARATION ROAD STATION	NOTES
INTERCHANGE QUANTITIES			
NEFRONT2	26+73 TO 29+12	2.4	
NEFRONT3	5+00 TO 7+80	2.8	
SEFRONT	32+70 TO 37+80	5.1	
SEFRONT	42+00 TO 50+00	8.0	
VALLEYDR	5+0 TO 6+75	1.7	
NBCSAH5	115+36 TO 116+71	1.4	⑨
NBCSAH5	117+65 TO 123+11	5.5	⑨
INTERCHANGE QUANTITY TOTALS		26.9	
PROJECT TOTALS		26.9	

NOTES:

① WOOD FIBER ONLY.
② 200 LBS/ACRE: 10-10-20
③ HYDRO BROADCAST APPLIED AT THE RATE OF 40LBS/ACRE
④ APPLIED AT THE RATE OF 2100 LBS/ACRE.
⑤ PLACE AT BOTTOM 10' OF SLOPE TO STABLIZE SLOPE TOE.
⑥ PROVIDED FOR TEMPORARY EROSION CONTROL NO. 1 ON SHEET NO. 439.
⑦ PROVIDED FOR TEMPORARY EROSION CONTROL NO. 2 ON SHEETS NO. 440 AND 441.
⑧ PROVIDED FOR ALL POTENTIAL PROJECT TOPSOIL STOCKPILE LOCATIONS.
⑨ PROVIDED FOR THE BITUMINOUS TRAIL.
⑩ ADDITION QUANTITIES FOR USE THROUGHOUT THE PROJECT AT LOCATIONS DIRECTED BY THE ENGINEER.

TEMPORARY EROSION CONTROL
SUBGRADE PREPARATION

S.P. 179-020-031 S.P. 019-605-028

SHEET 17 OF 20

TABULATIONS

DRAWN BY: MRS | CHECKED BY: HS | CERTIFIED BY _____ LICENSED PROFESSIONAL ENGINEER LIC. NO. 18520 DATE 6/18/12

STATE PROJ. NO. 1901-148 (T.H. 13) SHEET NO. 37 OF 442 SHEETS

DISTRICT #: METRO
IPLOT NAME: d1901148_tberos
FILENAME: Projects/DM_ROS/013/1901/148/Design/PlanSheets/Tabulations/d1901148_tb.dgn
PLOTTED/REVISED: 14-JUN-2012 13:06

TURF ESTABLISHMENT

V

STATION	LOCATION	SEEDING	SALT RESISTANT SOD	SUBSOIL	SEED MIXTURE TYPE 250 ①	EROSION CONTROL BLANKET CATEGORY 3	HYDRAULIC SOIL STABILIZER TYPE 8 ②	MULCH MATERIAL TYPE 3 ③	DISK ANCHOR	FERTILIZER TYPE 3 ④	NOTES
		ACRE	SQ YDS	ACRE	POUND	SQ YD	POUND	TONS	ACRE	POUND	
INTERCHANGE QUANTITIES											
13EB											
654+53 TO 658+64	RT	0.13		0.13	9		459			46	
654+89 TO 677+54	LT	0.85		0.85	60	4130				299	
654+96 TO 683+13	LT	0.85		0.85	59		2964			296	
669+87 TO 681+50	RT	0.32		0.32	22		1119			112	
669+93 TO 681+49	RT	0.39		0.39	27	1889				137	
681+57 TO 689+95	RT	0.35		0.35	25		1712			124	
691+09 TO 698+25	RT	0.30		0.30	21		1056			106	
706+13 TO 717+44	RT	0.31		0.31	22		1092			109	
717+44 TO 719+46	RT	0.30		0.30	21	1461				106	
707+69 TO 717+44	LT	0.33		0.33	23		1144			114	
712+38 TO 718+69	LT	0.08		0.08	6	390				28	
13WB											
654+66 TO 677+54	RT	0.63		0.63	44		2198			220	
657+00 TO 679+50	LT	0.59		0.59	41		2075			207	
664+64 TO 679+50	LT	0.74		0.74	52	3580				259	
681+68 TO 686+91	LT	0.14		0.14	10		498			50	
682+25 TO 686+71	LT	0.79		0.79	55	3808				275	
688+14 TO 689+43	LT	0.03		0.03	2		117			12	
692+99 TO 705+06	LT	0.45		0.45	32	2200				159	
699+50 TO 699+87	LT		125	0.03						9	
705+26 TO 718+50	LT	0.43		0.43	30		1518			152	
707+88 TO 712+50	LT	0.54		0.54	38	2596				188	
712+38 TO 718+69	RT	0.17		0.17	12		610			61	
NBCSAH5											
102+16 TO 105+37	RT		501	0.10						36	
106+00 TO 111+27	RT		980	0.20						71	
108+87 TO 111+14	RT	0.52		0.52	36		1823			182	
111+78 TO 112+09	RT		61	0.01						4	
113+38 TO 116+90	RT	1.57		1.57	110			3	1.6	550	
114+96 TO 116+59	RT		95	0.02						7	
117+73 TO 123+16	RT	0.39		0.39	27		1354			135	
123+73 TO 126+35	RT	0.24		0.24	17			0.5	0.2	85	
123+79 TO 126+39	RT	0.09		0.09	6		313			31	
SBCSAH5											
103+00 TO 104+98	RT		135	0.03						10	
106+03 TO 111+77	LT		1215	0.25						88	
112+05 TO 112+36	LT		61	0.01						4	
113+33 TO 113+84	LT		99	0.02						7	
113+70 TO 114+92	LT	0.03		0.03	2		111			11	
117+77 TO 119+04	LT		265	0.05						19	
119+04 TO 123+04	LT	0.13		0.13	9		459			46	
123+75 TO 126+54	RT TO LT	0.15		0.15	11		532			53	
126CON											
11+50 TO 21+70	LT	0.33		0.33	23		1147			115	
11+50 TO 12+80	RT		147	0.03						11	
11+50 TO 19+44	LT	0.48		0.48	34			1	0.5	169	
13+90 TO 15+65	RT	0.14		0.14	10		476			48	
15+92 TO 21+86	RT	0.15		0.15	11		536			54	
16+05 TO 21+92	RT	0.58		0.58	41			1	0.6	205	
23+12 TO 28+70	LT	0.11		0.11	7		371			37	
23+24 TO 28+70	RT	0.12		0.12	8		421			42	
23+24 TO 25+93	RT	0.13		0.13	9	651				47	
INTERCHANGE QUANTITY SUB-TOTALS		13.98	3684	14.63	972	20705	24105	5.5	2.9	5136	

NOTES:

① APPLIED AT A RATE OF 70 LBS/ACRE.

② APPLIED AT A RATE OF 3500 LBS/ACRE.

③ APPLIED AT A RATE OF 2 TONS/ACRE.

④ APPLIED AT A RATE OF 350 LBS/ACRE.

TURF ESTABLISHMENT

SHEET 18 OF 20

S.P. 179-020-031 S.P. 019-605-028

TABULATIONS

STATE PROJ. NO. 1901-148 (T.H. 13) SHEET NO. 38 OF 442 SHEETS

DRAWN BY: MRS CHECKED BY: HS CERTIFIED BY LICENSED PROFESSIONAL ENGINEER LIC. NO. 18520 DATE 6/18/12

PLOTTED/REVISED: 12-JUN-2012 13:29

DISTRICT #: METRO
IPLOT NAME: d1901148_tbl
FILENAME: Projects/DM_ROS/013/1901/148/Design/PlanSheets/Tabulations/d1901148_tb.dgn

TURF ESTABLISHMENT

V

STATION	LOCATION	SEEDING	SALT RESISTANT SOD	SUBSOIL	SEED MIXTURE TYPE 250 ①	EROSION CONTROL BLANKET CATEGORY 3	HYDRAULIC SOIL STABILIZER TYPE 8 ②	MULCH MATERIAL TYPE 3 ③	DISK ANCHOR	FERTILIZER TYPE 3 ④	NOTES
		ACRE	SQ YDS	ACRE	POUND	SQ YD	POUND	TONS	ACRE	POUND	
INTERCHANGE QUANTITIES											
FRONTCON											
10+42 TO 16+05	LT	0.10		0.10	7		345			34	
10+55 TO 12+05	LT	0.53		0.53	37	2586				187	
12+51 TO 15+12	LT	0.05		0.05	3	226				16	
NEFRONT											
5+18 TO 7+19	RT		705	0.15						51	
5+17 TO 6+93	LT		319	0.07						23	
7+33 TO 8+00	LT		114	0.02						8	
NERONT2											
26+40 TO 27+71	RT	0.04		0.04	3		136			14	
26+73 TO 29+12	LT		292	0.06						21	
28+18 TO 29+12	RT		127	0.03						9	
NEFRONT3											
5+28 TO 8+82	RT	0.10		0.10	7		364			36	
5+50 TO 8+61	LT		288	0.06						21	
8+98 TO 9+97	RT TO LT		341	0.07						25	
NWFRONT											
7+20 TO 7+70	RT TO LT	0.03		0.03	2		110			11	
SEFRONT											
30+37 TO 37+97	LT		844	0.17						61	
31+00 TO 33+18	RT		256	0.05						19	
33+39 TO 33+79	RT		53	0.01						4	
33+98 TO 41+45	RT		924	0.19						67	
39+01 TO 63+02	LT	0.61		0.61	43		2131			213	
41+71 TO 50+18	RT	0.14		0.14	10		488			49	
50+63 TO 60+00	RT	0.29		0.29	20		1024			102	
NWRAMP											
70+69 TO 73+04	RT		280	0.06							
71+95 TO 80+83	RT	0.20		0.20	14		714			71	
72+44 TO 76+46	RT	0.36		0.36	25	1758				127	
73+53 TO 78+34	RT	0.13		0.13	9		442			44	
77+64 TO 80+53	RT	0.11		0.11	8	523				38	
NWLOOP											
80+00 TO 88+25	RT	1.61		1.61	113	7789				563	
81+21 TO 83+99	LT	0.08		0.08	6		280			28	
80+00 TO 88+26	RT	0.20		0.20	14		710			71	
SWRAMP											
50+00 TO 58+22	RT	0.34		0.34	24					119	
SERAMP											
61+13 TO 64+86	RT		776	0.16	11					56	
DRIVE2											
10+32 TO 11+39	LT	0.04		0.04	3		141			14	
10+54 TO 11+39	RT	0.02		0.02	1		54			5	
10+81 TO 11+27	LT	0.02		0.02	1	101				7	
VALLEYDR											
5+00 TO 6+73	RT		277	0.06						20	
DRIVE1											
10+00 TO 10+83	RT		91	0.02						7	
10+24 TO 10+64	LT		29	0.01						2	
INTERCHANGE QUANTITY SUB-TOTALS		18.98	9400	20.82	1333	33687	31044	5.5	2.9	7279	

NOTES:

① APPLIED AT A RATE OF 70 LBS/ACRE.

② APPLIED AT A RATE OF 3500 LBS/ACRE.

③ APPLIED AT A RATE OF 2 TONS/ACRE.

④ APPLIED AT A RATE OF 350 LBS/ACRE.

TURF ESTABLISHMENT

SHEET 19 OF 20

S.P. 179-020-031 S.P. 019-605-028

TABULATIONS

STATE PROJ. NO. 1901-148 (T.H. 13) SHEET NO. 39 OF 442 SHEETS

DRAWN BY: MRS CHECKED BY: HS CERTIFIED BY LICENSED PROFESSIONAL ENGINEER LIC. NO. 18520 DATE 6/18/12

PLOTTED/REVISED: 12-JUN-2012 13:29

DISTRICT #: METRO
IPLOT NAME: d190ll48_tbl2
FILENAME: Projects/DM_ROS/013/1901/148/Design/PlanSheets/Tabulations/d190ll48_tb.dgn

TURF ESTABLISHMENT

V

STATION	LOCATION	SEEDING	SALT RESISTANT SOD	SUBSOIL	SEED MIXTURE TYPE 250 ①	EROSION CONTROL BLANKET CATEGORY 3	HYDRAULIC SOIL STABILIZER TYPE 8 ②	MULCH MATERIAL TYPE 3 ③	DISK ANCHOR	FERTILIZER TYPE 3 ④	NOTES
		ACRE	SQ YDS	ACRE	POUND	SQ YD	POUND	TONS	ACRE	POUND	
100% STATE QUANTITIES											
13EB											
717+44 TO 724+81	RT	0.08		0.08	6		291			29	
717+44 TO 733+34	LT	0.44		0.44	31		1536			154	
718+69 TO 733+38	LT	0.27		0.27	19	1307				95	
724+87 TO 731+49	RT	0.05		0.05	4		178			18	
731+70 TO 733+25	RT	0.02		0.02	2		75			8	
736+06 TO 744+07	LT	0.22		0.22	15		771			77	
736+07 TO 744+10	LT	0.14		0.14	10	675				49	
13WB											
718+50 TO 733+24	RT	0.41		0.41	28		1419			142	
718+50 TO 721+55	LT	0.03		0.03	2		98			10	
721+86 TO 731+58	LT	0.10		0.10	7		334			33	
731+61 TO 738+33	LT	0.03		0.03	2		93			9	
735+92 TO 743+96	RT	0.22		0.22	15		774			77	
S.P. 179-020-031 QUANTITIES											
EBWIL											
40+10 TO 45+13	RT		862	0.18						62	
WBWIL											
40+16 TO 43+40	LT		381	0.08						28	
INTERCHANGE QUANTITY TOTALS		18.98	9400	20.82	1333	33687	31044	5.5	2.9	7279	
100% STATE QUANTITY TOTALS		2.01		2.01	141	1982	5569			701	
SP 178-020-131 QUANTITY TOTALS			1243	0.26						90	
PROJECT TOTALS		20.99	10643	23.09	1474	35669	36613	5.5	2.9	8070	

NOTES:

① APPLIED AT A RATE OF 70 LBS/ACRE.

② APPLIED AT A RATE OF 3500 LBS/ACRE.

③ APPLIED AT A RATE OF 2 TONS/ACRE.

④ APPLIED AT A RATE OF 350 LBS/ACRE.

DISTRICT #: METRO
IPLOT NAME: d1901148_tb13
FILENAME: Projects/DM_ROS/013/1901/148/Design/PlanSheets/Tabulations/d1901148_tb.dgn
PLOTTED/REVISED: 12-JUN-2012 13:30

S.P. 179-020-031 S.P. 019-605-028

TABULATIONS

DRAWN BY: MRS CHECKED BY: HS CERTIFIED BY LICENSED PROFESSIONAL ENGINEER LIC. NO. 18520 DATE 6/18/12

STATE PROJ. NO. 1901-148 (T.H. 13) SHEET NO. 40 OF 442 SHEETS

MISCELLANEOUS DRAINAGE ITEMS

W

STATION TO STATION	OFFSET	ITEM IN PLACE	LEAVE AS IS	REMOVALS: CONC. CULVERT (LIN FT)	REMOVALS: METAL CULVERT (LIN FT)	REMOVALS: PIPE SEWER (LIN FT)	REMOVALS: CONC. APRON (EACH)	REMOVALS: MANHOLE OR CATCH BASIN (EACH)	REMOVALS: CSTG. ASSY. (EACH)	FLOWLINE ELEVATION	TOP OF CASTING (LIN FT)	ADJUST FRAME & RING CASTING (EACH)	REPAIR STORM SEWER (EACH)	NOTES
INTERCHANGE QUANTITY														
13EB														
664+00	169' LT	CATCH BASIN	X								728.42			
664+00	141' LT	CATCH BASIN	X								728.5			
664+02	100' RT	MANHOLE	X								733			
664+07	85' RT	CATCH BASIN	X								732.1			
664+87	45' LT	RCP APRON					1			730.17				
664+87 TO 665+22	45' LT	18" RCP		35										
665+02	94' RT	MANHOLE	X							723.76	735.46			
665+02	93' RT TO 45'LT	24" RCP	X											
665+02 TO 665+04	46' LT TO 129'LT	24" RCP				83								
665+04	129' LT	MANHOLE							1	725.08	730.86			
665+04 TO 668+00	129' LT TO 141' LT	21" RCP	X											
665+11	37' RT	APRON	X							730.61				
665+13	86' RT	CATCH BASIN	X							729.29	732.83			
665+22	46'LT	RCP APRON					1			730.09				
668+00	169' LT	CATCH BASIN	X								731.59			
668+00	141' LT	CATCH BASIN	X								731.69			
668+59	93' RT	MANHOLE	X								736.03			
670+07	93' RT	MANHOLE	X								736.98			
671+35	134' RT	CATCH BASIN	X								756.71			
671+35 TO 671+63	134' RT TO 132' RT	12" RCP	X											
671+55	93' RT	MANHOLE	X							729.73	737.38			
671+55 TO 672+18	94' RT TO 319' RT	12" RCP	X											
671+63	132' RT	CATCH BASIN	X								736.84			
671+85	169' LT	CATCH BASIN	X								735.27			
671+86	141' LT	CATCH BASIN	X								735.32			
671+92	85' RT	CATCH BASIN	X								737.27			
671+95	142' LT	CATCH BASIN	X								735.37			
672+18	319' RT	CATCH BASIN	X											
672+56	137' RT	CATCH BASIN	X								734.37			
674+08	94' RT	MANHOLE	X								739.31			
675+18	137' RT	MANHOLE	X								737.61			
675+35	93' RT	MANHOLE	X								740.1			
675+38	125' RT	MANHOLE	X								739.04			
675+38	58' RT	CATCH BASIN	X								739.01			
675+47	86' RT	CATCH BASIN	X								739.37			
675+72	138' RT	CATCH BASIN	X								736.87			
676+37	94' RT	MANHOLE	X								740.36			
676+81	108' RT	CATCH BASIN	X								740.32			
676+85	141' RT	CATCH BASIN	X								739.22			
677+83 TO 679+55	783' LT TO 269' LT	24" RCP	X											
678+55 TO 679+55	289' LT TO 269' LT	21" RCP	X											
679+55 TO 679+94	269' LT TO 163' LT	18" RCP	X											
679+55 TO 681+08	269' LT TO 348' LT	21" RCP	X											
679+56	269' LT	MANHOLE	X								741.6			
679+58	285' LT	MANHOLE	X											
679+59	269' LT	MANHOLE	X							734.14	741.94			
679+94 TO 681+54	159' LT TO 163' LT	18" RCP	X											
680+38	202' LT	CATCH BASIN	X								742.3			
681+01	364' LT	CATCH BASIN						1	1	736.21	742.41			
681+05	364' LT	CATCH BASIN						1	1	736.49	742.49			
681+08	348' LT	MANHOLE								735.3	742.86	1		
681+20	335' LT	CATCH BASIN						1	1	736.23	742.63			
681+27	335' LT	CATCH BASIN						1	1	736.33	742.63			
681+53	159' LT	MANHOLE	X							740.42	750.72			
INTERCHANGE QUANTITY SUB-TOTAL				35		83	2	4	5			1		

MISCELLANEOUS DRAINAGE ITEMS

SHEET 1 OF 6

S.P. 179-020-031 S.P. 019-605-028

TABULATIONS

DRAWN BY: GLJ | CHECKED BY: HS | CERTIFIED BY _____ LICENSED PROFESSIONAL ENGINEER LIC. NO. 18520 DATE 6/18/12

STATE PROJ. NO. 1901-148 (T.H. 13) SHEET NO. 41 OF 442 SHEETS

DISTRICT #: METRO
IPLOT NAME: d1901148_Inpdrnl
FILENAME: Projects/DM_ROS/013/1901/148/Design/PlanSheets/Tabulations/d1901148_Util_tb.dgn
PLOTTED/REVISED: 13-JUN-2012 14:57

MISCELLANEOUS DRAINAGE ITEMS

W

STATION TO STATION	OFFSET	ITEM IN PLACE	LEAVE AS IS	REMOVALS: CONC. CULVERT	REMOVALS: METAL CULVERT	REMOVALS: PIPE SEWER	REMOVALS: CONC. APRON	REMOVALS: MANHOLE OR CATCH BASIN	REMOVALS: CSTG. ASSY.	FLOWLINE ELEVATION	TOP OF CASTING	ADJUST FRAME & RING CASTING	REPAIR STORM SEWER	NOTES
				LIN FT	LIN FT	LIN FT	EACH	EACH	EACH		LIN FT	EACH	EACH	
681+55 TO 681+56	46' RT TO 45' LT	15" RCP		91										
681+53	36' RT	CATCH BASIN						1	1	752.41	756.51			
681+53	160' LT	MANHOLE	X							740.42	750.72			
681+54 TO 681+66	159' LT TO 45' LT	48" RCP				116								
681+55 TO 681+57	45' RT TO 45' LT	15" RCP				73								
681+55 TO 681+57	117' RT TO 45' RT	12" RCP				71								
681+66	45' LT	CATCH BASIN						1	1		751.8			
681+66	46'LT	APRON					1			752.43				
681+56	45' RT	CATCH BASIN						1	1	753.35	757.65			
681+57	117' RT	MANHOLE						1	1	760.22	766.22			
681+57 TO 681+76	117' RT TO 141' RT	12" RCP				34								
681+76	141' RT	CATCH BASIN	X							763.49	766.88			
681+77	108' RT	CATCH BASIN	X							763.53	766.73			
681+82	108' RT	CATCH BASIN	X							763.65	767.05			
681+82	141' RT	CATCH BASIN	X							763.8	767.2			
684+96	484' LT	CATCH BASIN	X							747.21	751.34			
685+05	464' LT	CATCH BASIN	X							747.87	750.87			
687+13 TO 689+27	133' LT TO 127' LT	60" RCPA				204								
687+78	100' RT	CATCH BASIN	X											
688+90 TO 689+30	96' RT TO 95' RT	18" RCP	X											
689+27	127' LT	MANHOLE						1	1	765.04	777.42			
689+27 TO 689+50	127' LT TO 97' RT	90" RCP				225								
689+27 TO 689+67	127' LT TO 177' LT	84" RCP				63								
689+27 TO 691+07	127' LT TO 101' LT	18" RCP				176								
689+31	97' RT	CATCH BASIN						1	1	778.33	786.88			
689+50 TO 690+32	97' RT TO 155' RT	84" RCP				103								
689+50 TO 690+54	97' RT TO 79' RT	18" RCP				4								
689+67 TO 689+99	177' LT TO 282' LT	84" RCP				109								
689+76	93' RT	MANHOLE						1	1	773.69	782.19			
690+29	82' RT	CATCH BASIN						1	1		783.2			
690+32	155' RT	MANHOLE						1	1	768.64	784.34			
690+41	52' RT	CATCH BASIN						1	1	780.05	783.95			
690+46	52' RT	CATCH BASIN						1	1		783.8			
690+49 TO 690+53	52' RT TO 79' RT	12" RCP				24								
690+50	80' RT	CATCH BASIN						1	1		783.7			
690+54 TO 691+30	79' RT TO 75' RT	18" RCP				78								
690+55 TO 690+57	51' RT TO 78' RT	12" RCP				24								
690+57	77' RT	MANHOLE						1	1		784.3			
690+63	77' RT	CATCH BASIN						1	1		783.8			
691+07	101' LT	MANHOLE						1	1	775.6	782.07			
691+07	18' LT TO 38'LT	18" RCP				20								
691+07 TO 691+15	100' LT TO 38' LT	18" RCP				64								
691+07 TO 693+11	101' LT TO 104' LT	21" RCP				204								
693+11 TO 694+70	101' LT TO 104' LT	21" RCP				159								
691+10	18' LT	CATCH BASIN						1	1	777.34	781.84			
691+13	72' RT	CATCH BASIN						1	1		783.3			
691+30 TO 691+86	75' RT TO 61' RT	18" CMP			58									
691+36 TO 691+30	143' RT TO 75' RT	18" RCP		68										
691+38	133' RT	CATCH BASIN						1	1		783.8			
691+39	142' RT	CATCH BASIN						1	1		783.7			
691+41	147' RT	CATCH BASIN						1	1		783.7			
691+79	62' RT	APRON					1			782.12				
694+71	103' LT	CATCH BASIN	X							778.4	783.95			
694+71	86' LT	CATCH BASIN						1	1	780.59	784.34			
694+71 TO 694+71	86' LT TO 103' LT	12" RCP				15								
694+71 TO 694+86	103' LT TO 136' LT	18" RCP	X											
694+85	140' LT	CATCH BASIN	X							778.56	783.86			
INTERCHANGE QUANTITY SUB-TOTAL				159	58	1766	2	21	21					

MISCELLANEOUS DRAINAGE ITEMS

SHEET 2 OF 6

S.P. 179-020-031 S.P. 019-605-028

TABULATIONS

DRAWN BY: GLJ | CHECKED BY: HS | CERTIFIED BY LICENSED PROFESSIONAL ENGINEER LIC. NO. 18520 DATE 6/18/12

STATE PROJ. NO. 1901-148 (T.H. 13) SHEET NO. 42 OF 442 SHEETS

DISTRICT #: METRO
IPLOT NAME: d1901148_hpdrn2
FILENAME: Projects/DM_ROS/013/1901/148/Design/PlanSheets/Tabulations/d1901148_UHI_tb.dgn
PLOTTED/REVISED: 13-JUN-2012 14:56

MISCELLANEOUS DRAINAGE ITEMS

W

STATION TO STATION	OFFSET	ITEM IN PLACE	LEAVE AS IS	REMOVALS						FLOWLINE ELEVATION	TOP OF CASTING	ADJUST FRAME & RING CASTING	REPAIR STORM SEWER	NOTES
				CONC. CULVERT	METAL CULVERT	PIPE SEWER	CONC. APRON	MANHOLE OR CATCH BASIN	CSTG. ASSY.					
				LIN FT	LIN FT	LIN FT	EACH	EACH	EACH		LIN FT	EACH	EACH	
694+97	140' LT	CATCH BASIN	X							780.53	784.03			
695+72	59' RT	CATCH BASIN						1	1		785.6			
695+72 TO 695+73	82' RT TO 49' RT	6" RCP				33								
695+73	82' RT	CATCH BASIN						1	1		785.8			
695+73 TO 698+34	48' RT TO 47' RT	36" RCP				265								
695+81	82' RT	CATCH BASIN						1	1		785.8			
695+79	49' RT	MANHOLE						1	1					
695+81 TO 695+83	82' RT TO 48' RT	6" RCP				33								
695+82	82' RT	CATCH BASIN						1	1		785.8			
695+83	48' RT	MANHOLE						1	1		785.4			
695+92	83' RT	CATCH BASIN						1	1		785.8			
695+93	60' RT	CATCH BASIN						1	1		785.7			
695+93 TO 698+33	56' RT TO 95' RT	15" RCP				240								
698+33 TO 699+84	96' RT TO 99' RT	27" RCP		155										
698+34 TO 698+36	97' RT TO 148' LT	24" RCP		245										
698+37	148' LT	CATCH BASIN	X								785.6			
698+38	45'RT	CATCH BASIN						1	1	783.1	789.08			
698+39	148' LT	CATCH BASIN	X								785.82			
698+39 TO 698+98	149' LT TO 371' LT	30" RCP	X											
698+41	128' LT	MANHOLE	X							780.95	786.15			
698+41	149' LT	CATCH BASIN	X								785.6			
698+41	128' LT TO 149' LT	24" RCP	X											
698+41 TO 698+43	148' LT TO 96' RT	24" RCP				245								
698+41 TO 699+16	128' LT TO 104' LT	18" RCP	X											
698+42	60' RT	CATCH BASIN						1	1	783.6	788.95			
698+48	27' LT	APRON					1			784.38				
698+54	47' RT	APRON					1			786.96				
698+64	264' LT	CATCH BASIN	X											
698+98 TO 699+84	371' LT TO 553' LT	30" RCP	X											
699+16	141' LT	CATCH BASIN	X								786.27			
699+16	104' LT	CATCH BASIN	X					1	1		786.22			
699+16	90' LT	CATCH BASIN	X					1	1		786.4			
699+16 TO 699+16	137' LT TO 90' LT	12" RCP	X											
699+16 TO 703+21	104' LT TO 105' LT	15" RCP	X											
699+72 TO 699+84	257' RT TO 99' RT	24" RCP	X											
699+84	98' RT	MANHOLE	X							784.74	791.24			
699+93	87' RT	CATCH BASIN						1	1	790.28	791.78			
699+94	90' RT	CATCH BASIN	X							786.59	791.19			
703+21	143' LT	CATCH BASIN	X								789.9			
703+21	106' LT	CATCH BASIN	X								789.99			
703+21 TO 703+22	106' LT TO 81' LT	12" RCP				25								
703+21 TO 703+22	106' LT TO 143' LT	12" RCP	X											
703+22	81' LT	CATCH BASIN						1	1		790.7			
706+49	292' RT	MANHOLE	X							793.25	799.2			
706+52	107' RT	CATCH BASIN						1	1	793.2	796.3			
706+54 TO 706+97	106' RT TO 79' RT	12" RCP				50								
706+57	121' RT	MANHOLE						1	1	792.25	796.54			
706+57 TO 706+97	122' RT TO 97' RT	12" RCP				60								
706+80	107'RT	CATCH BASIN						1	1	793.31	796.21			
706+82 TO 706+97	106' RT TO 97' RT	12" RCP				31								
706+97 TO 709+25	97' RT TO 96' RT	24" RCP				217								
706+98	78' RT	CATCH BASIN						1	1	792.23	795.65			
708+52	135' LT	CATCH BASIN	X							792.22	796.07			
708+54 TO 709+22	131' LT TO 181' LT	12" RCP	X											
708+74 TO 709+10	236' LT TO 241' LT	12" RCP	X											
708+79	257' LT	CATCH BASIN	X							785.13	789.38			
708+99	296' LT	MANHOLE	X								789.3			
INTERCHANGE QUANTITY SUB-TOTAL				400		1199	2	18	18					

MISCELLANEOUS DRAINAGE ITEMS

SHEET 3 OF 6

S.P. 179-020-031 S.P. 019-605-028

TABULATIONS

STATE PROJ. NO. 1901-148 (T.H. 13) SHEET NO. 43 OF 442 SHEETS

DRAWN BY: GLJ | CHECKED BY: HS | CERTIFIED BY _____ LICENSED PROFESSIONAL ENGINEER LIC. NO. 18520 DATE 6/18/12

PLOTTED/REVISED: 13-JUN-2012 14:58
DISTRICT #: METRO
IPLOT NAME: d190148_Inpdrn3
FILENAME: Projects/DM_ROS/013/1901/148/Design/PlanSheets/Tabulations/d190148_Util_tb.dgn

MISCELLANEOUS DRAINAGE ITEMS

W

STATION TO STATION	OFFSET	ITEM IN PLACE	LEAVE AS IS	REMOVALS: CONC. CULVERT	REMOVALS: METAL CULVERT	REMOVALS: PIPE SEWER	REMOVALS: CONC. APRON	REMOVALS: MANHOLE OR CATCH BASIN	REMOVALS: CSTG. ASSY.	FLOWLINE ELEVATION	TOP OF CASTING	ADJUST FRAME & RING CASTING	REPAIR STORM SEWER	NOTES
				LIN FT	LIN FT	LIN FT	EACH	EACH	EACH		LIN FT	EACH	EACH	
707+97 TO 709+30	8' LT TO 12' LT	12" CMP				133								
708+99 TO 709+12	296' LT TO 295' LT	15" RCP	X											
708+99 TO 709+22	296' LT TO 181' LT	66" RCP	X											
708+99 TO 709+68	296' LT TO 526' LT	33" RCP	X											
709+12	296' LT	CATCH BASIN	X								789.29	1		
709+12 TO 709+53	295' LT TO 283' LT	12" RCP	X											
709+22	181' LT	MANHOLE						1	1	782.3	796.63			
709+22	83' RT	APRON					1			791.35				
709+22 TO 709+31	181' LT TO 136' LT	48"TO 66"RCP	X											
709+22 TO 712+54	181' LT TO 170' LT	15" RCP				332								
709+25 TO 709+31	96' RT TO 136' LT	48" RCP				225								
709+29	74' RT	APRON					1			790.75				
709+30	12' LT	CATCH BASIN						1	1					
709+31	136' LT	MANHOLE	X							783.77	797.97			
709+39 TO 720+05	96' RT TO 101' RT	27" RCP	X											
709+41	84' RT	APRON					1			791.89				
709+68 TO 709+80	216' LT TO 183' LT	12" RCP		39										
709+69	220'LT	CATCH BASIN						1	1	789.86	794.21			
709+80	184' LT	CATCH BASIN						1	1	789.14	794.79			
709+80 TO 710+00	187' LT TO 68' LT	12" RCP				112								
710+00	68' LT	CATCH BASIN						1	1		801.8			
712+55	174' LT	CATCH BASIN						1	1		803.1			
712+55 TO 712+94	174' LT TO 84' LT	12" RCP		95										
712+94	80' LT	CATCH BASIN						1	1		808.51			
714+48	102' RT	CATCH BASIN									808.96	1		
100% STATE QUANTITY														
720+05	100' RT	CATCH BASIN	X											
720+15	91' LT	CATCH BASIN										1		
720+17	34' LT	CATCH BASIN						1	1		819.1			
720+17 TO 720+15	34' LT TO 91' LT	18" RCP	X											
721+19	86' RT	CATCH BASIN	X								823.4			
721+19	65' RT	CATCH BASIN	X					1	1		823.4			
722+77	19' RT	CATCH BASIN						1	1		826.62			
722+77 TO 723+27	19' RT TO 21' RT	15" RCP				50								
722+77	27' LT	CATCH BASIN						1	1					
723+27	21' RT	CATCH BASIN						1	1		827.06			
725+99	34' RT	CATCH BASIN										1		
726+16	34' RT	CATCH BASIN							1					
731+28	39' RT	CATCH BASIN	X											
INTERCHANGE QUANTITY														
NBCSAH5														
101+98	59' LT	CATCH BASIN	X							791.08	794.58			
101+98	12' LT	CATCH BASIN	X							791.57	794.57			
101+99	11' RT	CATCH BASIN	X							789.23	794.13			
102+01	24' LT	MANHOLE	X							788.86	798.71			
102+01	70' LT	MANHOLE	X							783.2	795.2			
104+00 TO 105+22	70' LT TO 66' LT	24" RCP				122								
104+42	283' RT	CATCH BASIN	X							788.12	793.22			
104+42 TO 104+76	283' RT TO 34' RT	18" RCP	X											
104+57 TO 105+22	58' LT TO 66' LT	12" RCP				66								
104+58	56' LT	CATCH BASIN						1	1	786.07	789.97			
104+76	34' RT	MANHOLE						1	1	785.75	790.6			
104+76 TO 105+44	34' RT TO 33' RT	18" RCP				68								
104+82 TO 105+44	10' RT TO 33' RT	12" RCP				63								
104+83	14' RT	CATCH BASIN						1	1	786.52	790			
105+12	30' LT	CATCH BASIN						1	1	786.43	790.24			
105+12	24' LT	CATCH BASIN						1	1	787.2	790.35			
105+12	24' LT TO 30' LT	12" RCP				6								
INTERCHANGE QUANTITY SUB-TOTAL				134		1177	3	12	12			2		
100% STATE QUANTITY SUB-TOTAL								5	6			2		

MISCELLANEOUS DRAINAGE ITEMS

SHEET 4 OF 6

S.P. 179-020-031 S.P. 019-605-028

TABULATIONS

STATE PROJ. NO. 1901-148 (T.H. 13) SHEET NO. 44 OF 442 SHEETS

DRAWN BY: GLJ | CHECKED BY: HS | CERTIFIED BY LICENSED PROFESSIONAL ENGINEER LIC. NO. 18520 DATE 6/18/12

DISTRICT #: METRO
IPLOT NAME: d1901148_Inpdrn4
FILENAME: Projects/DM_ROS/013/1901/148/Design/PlanSheets/Tabulations/d1901148_Util_tb.dgn
PLOTTED/REVISED: 13-JUN-2012 14:58

MISCELLANEOUS DRAINAGE ITEMS

W

STATION TO STATION	OFFSET	ITEM IN PLACE	LEAVE AS IS	REMOVALS: CONC. CULVERT (LIN FT)	REMOVALS: METAL CULVERT (LIN FT)	REMOVALS: PIPE SEWER (LIN FT)	REMOVALS: CONC. APRON (EACH)	REMOVALS: MANHOLE OR CATCH BASIN (EACH)	REMOVALS: CSTG. ASSY. (EACH)	FLOWLINE ELEVATION	TOP OF CASTING (LIN FT)	ADJUST FRAME & RING CASTING (EACH)	REPAIR STORM SEWER (EACH)	NOTES
105+12 TO 105+22	33' LT TO 66' LT	12" RCP				38								
105+22	66' LT	MANHOLE						1	1	784.2	789.75	1		
105+22 TO 105+65	67' LT TO 65' LT	24" RCP				45								
105+44 TO 105+52	33' RT TO 37' LT	54" RCP	X											
105+39 TO 105+44	33' RT TO 37' RT	12" RCP		6										
105+44	35' RT	MANHOLE						1	1	777.86	789.51			
105+44 TO 105+76	33' RT TO 40' RT	12" RCP				40								
105+47	37' RT	CATCH BASIN						1	1					
105+52 TO 105+65	37' LT TO 65' LT	54" RCP	X											
105+65	65' LT	MANHOLE								772.82	789.28	1		
105+65 TO 109+15	65' LT TO 62' LT	84' RCP	X										1	①
105+74	39' RT	CB						1	1	785.41	789.01			
105+76 TO 106+00	40' RT TO 65' RT	10" PVC				35								
106+00	65' RT	CATCH BASIN	X							786.43	789.58			
106+26	106' LT	CATCH BASIN	X											
106+26 TO 107+56	106' LT TO 101' LT	12" CPP	X											
107+56	101' LT	CATCH BASIN	X							786.61	789.51			
108+01	122' RT	CATCH BASIN	X											
108+01 TO 108+68	122' RT TO 16' RT	12" RCP	X											
108+68	12' RT	CATCH BASIN						1	1					
108+68 TO 109+11	12' RT TO 62' LT	36" RCP				84								
108+93	21' LT	CATCH BASIN						1	1					
108+96	34' LT	CATCH BASIN						1	1					
109+07 TO 109+37	88' LT TO 85' LT	12" RCP				30								
109+06	88' LT	CATCH BASIN										1		
109+11	58' LT	CATCH BASIN						1	1					
109+11 TO 109+15	58' LT TO 62' LT	24" RCP				4								
109+15	62' LT	MANHOLE								769.94	787.29	1		
109+15 TO 109+34	62' LT TO 84' LT	15" RCP	X											
109+15 TO 110+91	66' LT TO 62' LT	84" RCP	X											
109+33	84' LT	CATCH BASIN						1	1					
110+42	94' LT	CATCH BASIN	X							781.02	784.42			
110+42 TO 110+41	94' LT TO 65' LT	12" RCP	X											
110+91	66' LT	CATCH BASIN						1	1	768.64	784.34			
115+27 TO 118+57	27' LT TO 24' LT	84" RCP				330								
116+08 TO 116+51	13' RT TO 27' LT	12" RCP		29										
116+46	61' LT	CATCH BASIN						1	1		765.5			
116+46	33' LT	CATCH BASIN						1	1	712.17	766.4			
116+46 TO 116+47	27' LT TO 57' LT	12" RCP				28								
116+50	13' RT	CATCH BASIN						1	1	762.89	766.29			
116+50 TO 116+51	13' RT TO 26' LT	12" RCP				40								
116+51	27' LT	CATCH BASIN						1	1	754.54	766.43			
117+05	66' RT	CATCH BASIN						1	1	760.84	784.34			
117+05 TO 117+35	66' RT TO 66' RT	12" RCP				30								
117+35	66' RT	CATCH BASIN						1	1	760.04	764.15			
117+35 TO 117+41	66' RT TO 23' LT	15" RCP				90								
117+42	24' LT	MANHOLE						1	1	751.47	763.76			
118+57 TO 120+31	24' LT TO 4' LT	84" RCP				175								
120+23	23' RT	CATCH BASIN						1	1	746.55	749.63			
120+23 TO 120+31	22' RT TO 4' LT	12" RCP				28								
120+31	45' LT	CATCH BASIN						1	1	745.92	749.62			
120+31 TO 120+32	4' LT TO 45' LT	12" RCP				45								
120+31 TO 122+17	4' LT TO 22' RT	78" RCP				187								
120+32	5' LT	CATCH BASIN						1	1	734.61	749.65			
120+34	49' LT	CATCH BASIN						1	1					
120+39 TO 120+62	244' LT TO 78' LT		X											
120+39	79' LT TO 4' LT		X											
122+17 TO 125+07	22' RT TO 106' RT	78" RCP				302								
INTERCHANGE QUANTITY SUB-TOTAL				35		1531		21	21			4	1	

① CONSISTS OF REMOVING A SECTION OF INPLACE WATERMAIN THAT RUNS THROUGH THE 84" RCP AND MORTARING THE TWO SIDES OF THE 84" RCP.

MISCELLANEOUS DRAINAGE ITEMS

SHEET 5 OF 6

S.P. 179-020-031 S.P. 019-605-028

TABULATIONS

DRAWN BY: GLJ | CHECKED BY: HS | CERTIFIED BY _____ LICENSED PROFESSIONAL ENGINEER LIC. NO. 18520 DATE 6/18/12

STATE PROJ. NO. 1901-148 (T.H. 13) SHEET NO. 45 OF 442 SHEETS

DISTRICT #: METRO
IPLOT NAME: d1901148_Inpdrn5
FILENAME: Projects/DM_ROS/013/1901/148/Design/PlanSheets/Tabulations/d1901148_Uti1_tb.dgn
PLOTTED/REVISED: 13-JUN-2012 14:59

MISCELLANEOUS DRAINAGE ITEMS

W

STATION TO STATION	OFFSET	ITEM IN PLACE	LEAVE AS IS	REMOVALS: CONC. CULVERT (LIN FT)	REMOVALS: METAL CULVERT (LIN FT)	REMOVALS: PIPE SEWER (LIN FT)	REMOVALS: CONC. APRON (EACH)	REMOVALS: MANHOLE OR CATCH BASIN (EACH)	REMOVALS: CSTG. ASSY. (EACH)	FLOWLINE ELEVATION	TOP OF CASTING (LIN FT)	ADJUST FRAME & RING CASTING (EACH)	REPAIR STORM SEWER (EACH)	NOTES
123+14 TO 123+15	649' RT TO 525' RT	8" PVC	X											
123+15 TO 124+52	525' RT TO 495' RT	8" PVC	X											
123+25	82' RT	CATCH BASIN						1	1	737.49	741.24			
123+39	208' RT	MANHOLE						1	1	735.04	739.62			
123+49 TO 123+51	324' RT TO 749' RT	48" RCP	X											
123+52	495' RT	MANHOLE						1	1	734.52	741.87			
123+52 TO 123+76	212' RT TO 228' RT	24" RCP				32								
123+53	213' RT	CATCH BASIN						1	1	734.98	739.1			
123+76	228' RT	MANHOLE								732.99	739.71	1		
123+76 TO 123+83	228' RT TO 220' RT	24" RCP	X											
123+83	220' RT	CATCH BASIN	X							735.28	739.09			
124+11 TO 123+49	94' RT TO 324' RT	48"/42" RCP	X											
124+11 TO 124+24	94' RT TO 83' RT	48" RCP	X											
124+33	86' RT	MANHOLE	X							731.08	740.9			
124+33 TO 124+40	86' RT TO 63' RT	12" RCP				29								
124+41	59' RT	CATCH BASIN						1	1	736.33	740.21			
124+52	495' RT	MANHOLE	X											
WASHBURN (13EB_MS)														
653+39 TO 654+52	156' RT	66" RCP	X											
653+62	85'RT	APRON					1							
653+62 TO 654+70	85' RT TO 89' RT	18" CMP			108									
654+52	156' RT	MANHOLE	X											
654+52 TO 655+60	156' RT TO 152' RT	66" RCP	X											
654+70	89' RT	APRON	X											
654+84	156' RT	CATCH BASIN	X											
654+84 TO 654+87	151' RT TO 116' RT	12" RCP				35								
654+87	116' RT	MANHOLE						1	1					
654+87 TO 654+88	116' RT TO 100' RT	12" CMP			16									
654+88	100' RT	APRON					1							
655+60 TO 656+33	152' RT TO 137' RT	66" RCP	X											
S.P. 179-020-031 QUANTITY														
EBWIL														
40+06 TO 40+18	34' LT TO 10' LT	12" RCP	X											
40+17	71' LT	CATCH BASIN	X							783.12	785.52			
40+17 TO 40+06	71' LT TO 34' LT	12" RCP	X											
40+17 TO 42+32	71' LT TO 75' LT	12" RCP	X											
40+18	10' LT	MANHOLE	X							771.18	787.63			
40+18 TO 45+39	10' LT TO 26' LT	66" RCP	X											
40+76	48' LT	CATCH BASIN						1	1	783.47	786.57			
40+76 TO 40+82	48' LT	12" RCP				4								
40+78	26' RT	CATCH BASIN						1	1	783.24	786.34			
40+78	26' RT TO 11' LT	12" RCP	X											
40+78 TO 40+84	26' RT TO 25' RT	12" RCP				6								
40+82	48' LT	CATCH BASIN						1	1	783.19	786.59			
40+82	48' LT TO 11' LT	12" RCP	X											
40+84	25' RT	CATCH BASIN						1	1	783.4	786.4			
42+32	75' LT	MANHOLE	X							784.52	786.52			
43+23	90' LT	APRON	X								784.64			
43+23 TO 43+41	90' LT TO 83' LT	18" RCP	X											
43+41	83' LT	CATCH BASIN	X							785.12	788.57			
43+41 TO 43+83	83' LT TO 87' LT	15" RCP	X											
43+83	87' LT	CATCH BASIN	X							785.41	789.96			
43+83 TO 45+11	87' LT TO 93' LT	15" CPP	X											
INTERCHANGE QUANTITY TOTAL				763	182	5852	11	82	83			8	1	
100% STATE QUANTITY TOTAL								5	6			2		
S.P. 179-020-031 TOTAL						10		4	4					
PROJECT TOTALS				763	182	5862	11	91	93			10	1	

MISCELLANEOUS DRAINAGE ITEMS

SHEET 6 OF 6

S.P. 179-020-031 S.P. 019-605-028

TABULATIONS

DRAWN BY: GLJ | CHECKED BY: HS | CERTIFIED BY LICENSED PROFESSIONAL ENGINEER LIC. NO. 18520 DATE 6/18/12

STATE PROJ. NO. 1901-148 (T.H. 13) SHEET NO. 46 OF 442 SHEETS

DISTRICT #: METRO
IPLOT NAME: d190148_hpdrn6
FILENAME: Projects/DM_ROS/013/1901/148/Design/PlanSheets/Tabulations/d190148_Util_tb.dgn
PLOTTED/REVISED: 13-JUN-2012 14:59

UTILITY OWNERSHIP

XCEL	=	XCEL ENERGY
SPRINT	=	SPRINT COMMUNICATIONS
ATT	=	AT & T CORPORATION
CENTURY LINK	=	CENTURY LINK
MNDOT	=	MINNESOTA DEPARTMENT OF TRANSPORTATION
COMCAST	=	COMCAST CABLE COMMUNICATIONS, INCORPORATED
EVENTIS	=	EVENTIS TELECOM
INTEGRA	=	INTEGRA TELECOM OF MINNESOTA, INCORPORATED
TELECOM	=	TELECOM TRANSPORT MANAGEMENT, INC
PAETEC	=	PAETEC BUSINESS SERVICES
CHARTER COMMUNICATIONS	=	CHARTER COMMUNICATIONS
BURNSVILLE	=	CITY OF BURNSVILLE
DAKOTA CO.	=	DAKOTA COUNTY
MAGELLAN	=	MAGELLAN PIPELINE COMPANY, LP
CENTERPOINT	=	CENTERPOINT ENERGY MINNESOTA GAS
MCES	=	METROPOLITAN COUNCIL, ENVIRONMENTAL SERVICES

DAKOTA ELECTRIC ASSOCIATION

MINNESOTA VALLEY COOPERATIVE POWER AND LIGHT

GREAT RIVER ENERGY

UTILITY ABBREVIATIONS

FO BUR	FIBER OPTIC BURIED	T-BUR	BURIED TELEPHONE
GAS	GAS LINE	TEL HH	TELEPHONE HANDHOLE
FIRE HYD	FIRE HYDRANT	TV CABLE	BURIED TELEVISION CABLE
L POLE	LIGHT POLE	TV TOWER	TELEVISION TOWER
OHP	OVER HEAD POWER LINE	T-BUR	BURIED TELEPHONE
P-BUR	BURIED POWER	TEL HH	TELEPHONE HANDHOLE
PHH	POWER HANDHOLE	TEL PED	TELEPHONE PEDESTAL
P METER	POWER METER	U ST LIGHT	TRAFFIC SIGNAL LIGHT
P-PED	POWER PEDESTAL	VAULT	VAULT
P POLE	POWER POLE	WATER	WATER LINE
SAN	SANITARY SEWER	WATER VLV	WATER VALVE
SGL	SIGNAL	WMH	WATER MANHOLE
SIG-INT	UNDERGROUND SIGNAL INTERCONNECT	EMH	ELECTRICAL MANHOLE
SIG WIRE	SIGNAL WIRE	EHH	ELECTRICAL HANDHOLE
LOOP	LOOP	EPED	ELECTRICAL PEDESTAL
POWER	POWER LINE	EMTR	ELECTRICAL METER
THH FIBER	THH FIBER	SMH	SANITARY MANHOLE

GENERAL NOTES:

ALL RELOCATES AND ADJUSTMENTS SUBJECT TO MN/DOT AND DAKOTA COUNTY RIGHT OF WAY.

IT SHALL BE THE CONTRACTOR'S RESPONSIBILITY TO USE THE GOPHER STATE ONE-CALL EXCAVATION NOTICE SYSTEM AS REQUIRED BY MINNESOTA STATUTE, CHAPTER 216D FOR ALL UNDERGROUND UTILITY LOCATIONS.

THE SUBSURFACE UTILITY INFORMATION IN THIS PLAN IS UTILITY QUALITY LEVEL D. THIS UTILITY QUALITY LEVEL WAS DETERMINED ACCORDING TO THE GUIDELINES OF CI/ASCE 38-02, ENTITLED "STANDARD GUIDELINES FOR THE COLLECTION AND DEPICTION OF EXISTING SUBSURFACE UTILITY DATA".

UTILITIES TO BE RELOCATED BY OTHERS UNLESS NOTED.

THE REMARKS COLUMN IS BASED UPON THE BEST INFORMATION AVAILABLE AND MAY NOT REFLECT THE ACTUAL AFFECTS ON THE UTILITIES BY CONSTRUCTION. ACTUAL DETERMINATIONS WILL BE MADE IN THE FIELD DURING CONSTRUCTION.

DISTRICT #: METRO
IPLOT NAME: d1901148_UHI_tb17
FILENAME: Projects/DM_ROS/013/1901/148/Design/PlanSheets/Tabulations/d1901148_UHI_tb.dgn
PLOTTED/REVISED: 31-JUL-2012 07:23

GAS

STATION TO STATION	OFFSET (FT)	DESCRIPTION	OWNER	REMARKS			NOTES
				ADJUST	RELOCATE	LEAVE AS IS	
EB13							
662+55 - 676+32	190L - 175L	GAS - 4" STEEL PIPE	CENTERPOINT			X	
670+64 - 675+85	100R	GAS - 3" PLASTIC PIPE	CENTERPOINT			X	
671+64 - 672+29	100R - 303R	GAS - 3" PLASTIC PIPE	CENTERPOINT			X	
675+85 - 678+64	100R - 152R	GAS - 3" PLASTIC PIPE	CENTERPOINT			X	
676+28 - 676+32	190L - 127L	GAS - 4" STEEL PIPE	CENTERPOINT			X	
676+28 - 686+46	134L - 120L	GAS - 4" STEEL PIPE	CENTERPOINT		X		
678+64 - 679+83	150R - 152R	GAS - 3" STEEL PIPE	CENTERPOINT			X	
678+90 - 679+49	446L - 266L	GAS - 3" PLASTIC PIPE	CENTERPOINT			X	
679+40 - 679+49	266L - 131L	GAS - 3" PLASTIC PIPE	CENTERPOINT			X	
679+83 - 682+12	146R - 150R	GAS - 1.25" PLASTIC PIPE	CENTERPOINT			X	
679+83 - 679+86	131L - 150R	GAS - 3" STEEL PIPE	CENTERPOINT		X		
686+46 - 690+50	120L - 101L	GAS - 4" STEEL PIPE	CENTERPOINT		X		
686+64 - 688+75	278R - 411R	GAS - 6" STEEL PIPE	CENTERPOINT			X	
688+12 - 688+44	288L - 117L	GAS	CENTERPOINT		X		
688+47 - 688+75	221R - 278R	GAS - 6" STEEL PIPE	CENTERPOINT		X		
688+47 - 690+78	102R - 221R	GAS - 6" STEEL PIPE	CENTERPOINT		X		
690+44 - 690+50	142L - 101L	GAS - 4" STEEL PIPE	CENTERPOINT		X		
690+44 - 695+54	142L - 132L	GAS - 4" STEEL PIPE	CENTERPOINT		X		
690+50 - 690+78	101L - 102R	GAS - 6" STEEL PIPE	CENTERPOINT		X		
690+78 - 691+18	90R - 102R	GAS - 6" STEEL PIPE	CENTERPOINT		X		
691+18 - 691+33	90R - 118R	GAS - 6" STEEL PIPE	CENTERPOINT		X		
691+19 - 691+33	118R - 129R	GAS - 6" STEEL PIPE	CENTERPOINT		X		
691+19 - 691+48	129R - 390R	GAS - 6" STEEL PIPE	CENTERPOINT		X		
691+33 - 692+45	118R - 74R	GAS - 2" STEEL PIPE	CENTERPOINT		X		
692+45 - 696+78	74R - 61R	GAS - 6" STEEL PIPE	CENTERPOINT		X		
692+65 - 692+82	343L - 141L	GAS - 2" PLASTIC PIPE	CENTERPOINT		X		
694+81 - 694+87	264R - 389R	GAS - 2" PLASTIC PIPE	CENTERPOINT		X		
695+54 - 699+91	135L - 132L	GAS - 6" STEEL PIPE	CENTERPOINT			X	
699+91 - 704+80	135L - 129L	GAS - 6" STEEL PIPE	CENTERPOINT			X	
704+80 - 708+04	131L - 129L	GAS - 6" STEEL PIPE	CENTERPOINT			X	
708+04 - 713+06	77L - 68L	GAS - 8" STEEL PIPE	CENTERPOINT		X		
708+04 - 708+04	131L - 68L	GAS - 6" STEEL PIPE	CENTERPOINT		X		
709+39 - 709+72	173L - 368L	GAS - 8" STEEL PIPE	CENTERPOINT			X	
709+39 - 710+29	173L - 170L	GAS - 8" STEEL PIPE	CENTERPOINT			X	
710+29 - 710+35	170L - 72L	GAS - 8" STEEL PIPE	CENTERPOINT			X	
NBCSAH5							
102+85 - 108+21	22R - 25R	GAS - 6" STEEL PIPE	CENTERPOINT		X		
104+31 - 105+07	288L - 296L	GAS - 1.25" PLASTIC PIPE	CENTERPOINT		X		
104+42 - 105+17	198L - 206L	GAS - 1.25" PLASTIC PIPE	CENTERPOINT		X		
104+49 - 105+21	967L - 169L	GAS - 2" PLASTIC PIPE	CENTERPOINT		X		
105+11 - 105+47	25R - 280R	GAS - 6" STEEL PIPE	CENTERPOINT		X		
105+11 - 105+21	280R - 333R	GAS - 2" PLASTIC PIPE	CENTERPOINT		X		
105+21 - 105+86	333R - 398R	GAS - 2" PLASTIC PIPE	CENTERPOINT		X		
105+31 - 105+47	360R - 504R	GAS - 1.25" PLASTIC PIPE	CENTERPOINT		X		
105+86 - 108+04	398R - 406R	GAS - 2" PLASTIC PIPE	CENTERPOINT		X		
106+11 - 106+24	749L - 633L	GAS - 2" PLASTIC PIPE	CENTERPOINT			X	
106+24 - 108+83	633L - 691L	GAS - 2" PLASTIC PIPE	CENTERPOINT			X	
108+25 - 109+28	977L - 514L	GAS - 6" STEEL PIPE	CENTERPOINT			X	
115+58 - 115+91	217R - 217R	GAS - 2" PLASTIC PIPE	CENTERPOINT		X		
115+91 - 116+41	205R - 217R	GAS - 2" PLASTIC PIPE	CENTERPOINT		X		
116+41 - 116+74	176R - 205R	GAS - 2" PLASTIC PIPE	CENTERPOINT		X		
116+74 - 117+16	176R - 190R	GAS - 2" PLASTIC PIPE	CENTERPOINT		X		
117+16 - 117+29	190R - 164R	GAS - 2" PLASTIC PIPE	CENTERPOINT		X		
117+29 - 117+38	164R - 36R	GAS - 2" PLASTIC PIPE	CENTERPOINT		X		
117+34 - 117+52	385L - 250L	GAS - 2" PLASTIC PIPE	CENTERPOINT		X		

GAS

STATION TO STATION	OFFSET (FT)	DESCRIPTION	OWNER	REMARKS			NOTES
				ADJUST	RELOCATE	LEAVE AS IS	
117+34 - 117+36	250L - 73L	GAS - 2" PLASTIC PIPE	CENTERPOINT		X		
117+36 - 117+49	73L - 62L	GAS - 2" PLASTIC PIPE	CENTERPOINT		X		
117+37 - 117+50	36R - 21R	GAS - 2" PLASTIC PIPE	CENTERPOINT		X		
117+49 - 117+50	62L - 21R	GAS - 2" PLASTIC PIPE	CENTERPOINT		X		
117+52 - 118+10	385L - 508L	GAS - 2" PLASTIC PIPE	CENTERPOINT			X	
117+72 - 119+13	427L - 425L	GAS - 2" PLASTIC PIPE	CENTERPOINT			X	
119+79 - 123+31	1008L - 1012L	GAS - 3" PLASTIC PIPE	CENTERPOINT			X	

PETRO

STATION TO STATION	OFFSET (FT)	DESCRIPTION	OWNER	REMARKS			NOTES
				ADJUST	RELOCATE	LEAVE AS IS	
NBCSAH5							
102+91 - 103+26	161L - 106R	PETRO	MAGELLAN			X	

TMS/SIGNALS

STATION TO STATION	OFFSET (FT)	DESCRIPTION	OWNER	REMARKS ①			NOTES
				ADJUST	RELOCATE	LEAVE AS IS	
13EB							
660+00 TO 688+38	120' LT TO 112' LT	F/O BURIED	MNDOT		X		
688+38 TO 688+49	112' LT TO 105' LT	F/O BURIED	MNDOT		X		
668+49 TO 688+75	112' LT TO 67' LT	F/O BURIED	MNDOT		X		
679+93 TO 680+61	70' RT TO 60' RT	F/O BURIED	MNDOT		X		
680+61 TO 681+26	60' RT TO 60' RT	F/O BURIED	MNDOT		X		
681+38	58' RT	PEDESTAL	MNDOT		X		
681+50 TO 681+75	56' RT TO 50' RT	F/O BURIED	MNDOT		X		
681+61	54' RT	HANDHOLE	MNDOT		X		
681+75 TO 681+85	49' RT TO 37' RT	F/O BURIED	MNDOT		X		
681+82	31' RT	SIGN	MNDOT		X		
681+50 TO 688+68	59' RT TO 68' RT	F/O BURIED	MNDOT		X		
688+75	67' RT	PEDESTAL	MNDOT		X		
689+43	142' LT	SIGNAL	MNDOT		X		
688+74 TO 688+56	61' RT TO 113' LT	F/O BURIED	MNDOT		X		
688+56 TO 688+79	113' LT TO 138' LT	F/O BURIED	MNDOT		X		
688+79 TO 689+37	138' LT TO 144' LT	F/O BURIED	MNDOT		X		
688+83 TO 690+07	68' RT TO 71' RT	F/O BURIED	MNDOT		X		
690+07 TO 697+05	71' RT TO 47' RT	F/O BURIED	MNDOT		X		
697+05 TO 702+26	47' RT TO 51' RT	F/O BURIED	MNDOT		X		
702+26 TO 706+19	51' RT TO 55' RT	F/O BURIED	MNDOT		X		
706+19 TO 707+13	55' RT TO 70' RT	F/O BURIED	MNDOT		X		
707+13 TO 713+63	70' RT TO 79' RT	F/O BURIED	MNDOT		X		
713+63 TO 713+60	99' RT TO 60' RT	F/O BURIED	MNDOT		X		
713+60 TO 714+61	60' RT TO 39' RT	F/O BURIED	MNDOT		X		
714+61 TO 723+48	39' RT TO 39' RT	F/O BURIED	MNDOT		X		
723+48 TO 724+30	39' RT TO 56' RT	F/O BURIED	MNDOT		X		

① FOR PLANS, DETAILS AND QUANTITIES, SEE SHEET NO. SZ1 TO SZ23 AND SS1 TO SS31.
ALL WORK TO BE DONE BY PROJECT CONTRACTOR.

GAS - CENTERPOINT
PETRO - MAGELLAN
TMS - MNDOT

S.P. 179-020-031 S.P. 019-605-028

INPLACE UTILITY TABULATIONS

DRAWN BY: GLJ | CHECKED BY: HS | CERTIFIED BY _____ LICENSED PROFESSIONAL ENGINEER | LIC. NO. 18520 DATE 7/26/12

STATE PROJ. NO. 1901-148 (T.H. 13) SHEET NO. 48 OF 442 SHEETS

PLOTTED/REVISED: 26-JUL-2012 14:52
DISTRICT #: METRO
IPLOT NAME: d1901148_UtIl_tb16
FILENAME: Projects/DM_ROS/013/1901/148/Design/PlanSheets/Tabulations/d1901148_UtIl_tb.dgn

COMMUNICATION (CENTURY LINK)

STATION TO STATION	OFFSET (FT)	DESCRIPTION	OWNER	REMARKS			NOTES
				ADJUST	RELOCATE	LEAVE AS IS	
NBCSAH5							
101+75 - 108+48	74L - 66L	T-BUR	CENTURY LINK			X	
104+23	619L	COM PED	CENTURY LINK			X	
104+26	576L	COM PED	CENTURY LINK			X	
104+51	629L	TEL PED	CENTURY LINK			X	
104+51	628L	COM PED	CENTURY LINK			X	
104+51 - 108+71	863L - 74L	T-BUR	CENTURY LINK		X		
104+62	462L	COM PED	CENTURY LINK			X	
104+92 - 105+42	386R - 36R	T-BUR	CENTURY LINK		X		
104+92 - 108+03	386R - 413R	T-BUR	CENTURY LINK			X	
105+42 - 107+94	36R - 42R	T-BUR	CENTURY LINK		X		
105+61	585L	COM PED	CENTURY LINK			X	
106+12	652L	COM PED	CENTURY LINK			X	
106+63	349R	TEL PED	CENTURY LINK			X	
107+02	407R	TEL PED	CENTURY LINK			X	
107+02	406R	COM PED	CENTURY LINK			X	
107+17	673L	COM PED	CENTURY LINK			X	
107+73	676L	COM PED	CENTURY LINK			X	
107+85	624L	COM PED	CENTURY LINK			X	
107+94	42R	TEL PED	CENTURY LINK		X		
107+94 - 108+01	130L - 42R	T-BUR	CENTURY LINK		X		
107+97	43L	TEL MH	CENTURY LINK		X		
108+40 - 109+04	887L - 505L	T-BUR	CENTURY LINK			X	
109+27 - 109+90	765L - 535L	T-BUR	CENTURY LINK			X	
109+38 - 111+11	758L - 726L	T-BUR	CENTURY LINK			X	
116+45 - 117+76	87L - 78L	T-BUR	CENTURY LINK		X		
117+61	281L	TEL PED	CENTURY LINK		X		
117+61 - 118+18	281L - 279L	T-BUR	CENTURY LINK			X	
117+61 - 118+74	869L - 281L	T-BUR	CENTURY LINK			X	
117+74	77L	COM PED	CENTURY LINK		X		
117+76	78L	TEL PED	CENTURY LINK		X		
119+32 - 123+67	965L - 958L	T-BUR	CENTURY LINK			X	
119+83 - 123+36	1018L - 1012L	T-BUR	CENTURY LINK			X	
123+05	605R	TEL PED	CENTURY LINK			X	
123+67 - 125+94	960L - 874L	T-BUR	CENTURY LINK			X	
123+89	942L	COM PED	CENTURY LINK			X	
125+94 - 126+45	876L - 539L	T-BUR	CENTURY LINK			X	
EB13							
660+00 - 676+06	102R - 117R	T-BUR	CENTURY LINK			X	
660+00 - 676+68	223L - 198L	T-BUR	CENTURY LINK			X	
660+00 - 679+91	260L - 130L	FIBER OPTIC IN COND	CENTURY LINK			X	
662+30	204L	COM PED	CENTURY LINK			X	
662+50	113R	COM PED	CENTURY LINK			X	
665+08	125R	COM PED	CENTURY LINK			X	
671+08	102R	COM PED	CENTURY LINK			X	
671+75 - 672+46	104R - 324R	T-BUR	CENTURY LINK			X	
672+93	463R	COM PED	CENTURY LINK			X	
673+16 - 673+84	110R - 216R	T-BUR	CENTURY LINK			X	
673+84 - 674+34	110R - 263R	T-BUR	CENTURY LINK			X	
675+10	195L	COM PED	CENTURY LINK			X	
676+06 - 678+33	117R - 178R	T-BUR	CENTURY LINK			X	
676+52	124L	TEL PED	CENTURY LINK			X	
676+68 - 679+83	319L - 223L	T-BUR	CENTURY LINK			X	
678+33 - 680+11	178R	T-BUR	CENTURY LINK			X	
678+85 - 679+32	449L - 304L	T-BUR	CENTURY LINK			X	
679+51 - 679+83	415L - 319L	T-BUR	CENTURY LINK			X	
679+83	319L	TEL PED	CENTURY LINK			X	

COMMUNICATION (CENTURY LINK)

STATION TO STATION	OFFSET (FT)	DESCRIPTION	OWNER	REMARKS			NOTES
				ADJUST	RELOCATE	LEAVE AS IS	
679+83 - 679+93	319L - 257L	T-BUR	CENTURY LINK			X	
679+83 - 680+62	361L - 319L	T-BUR	CENTURY LINK			X	
679+93	257L	TEL MH	CENTURY LINK			X	
679+93 - 680+30	257L - 151L	T-BUR	CENTURY LINK			X	
680+11 - 682+68	162R - 178R	T-BUR	CENTURY LINK			X	
680+28 - 680+30	151L - 177R	T-BUR	CENTURY LINK			X	
680+30 - 687+89	154L - 151L	T-BUR	CENTURY LINK		X		
682+68 - 683+29	162R - 198R	T-BUR	CENTURY LINK			X	
683+29 - 683+87	198R - 308R	T-BUR	CENTURY LINK			X	
684+97	154L	TEL PED	CENTURY LINK		X		
686+31 - 690+78	104R - 357R	T-BUR	CENTURY LINK		X		
686+78 - 689+66	255R - 434R	T-BUR	CENTURY LINK			X	
687+89	154L	TEL PED	CENTURY LINK		X		
687+99	270R	TEL MH	CENTURY LINK			X	
688+95	124L	TEL PED	CENTURY LINK		X		
689+09 - 689+56	387L - 163R	T-BUR	CENTURY LINK		X		
689+35	191R	TEL MH	CENTURY LINK			X	
689+40 - 690+88	183R - 394R	FIBER OPTIC IN COND	CENTURY LINK		X		
689+41	154L	TEL PED	CENTURY LINK		X		
689+44 - 706+80	78R - 187R	FIBER OPTIC IN COND	CENTURY LINK		X		
689+44 - 721+73	76R - 184R	FIBER OPTIC IN COND	CENTURY LINK		X		
689+66 - 689+96	253R - 255R	T-BUR	CENTURY LINK			X	
689+77 - 692+79	708R - 99R	FIBER OPTIC IN COND	CENTURY LINK		X		
689+96 - 691+52	253R - 134R	T-BUR	CENTURY LINK		X		
690+03 - 690+33	139R - 169R	T-BUR	CENTURY LINK		X		
690+33 - 690+67	169R - 396R	T-BUR	CENTURY LINK		X		
690+78 - 694+76	104R - 88R	T-BUR	CENTURY LINK		X		
691+52 - 692+76	100R - 134R	T-BUR	CENTURY LINK		X		
692+60	303L	TEL PED	CENTURY LINK			X	
692+60 - 695+59	306L - 144L	T-BUR	CENTURY LINK			X	
692+76 - 700+72	100R - 82R	T-BUR	CENTURY LINK		X		
692+79	99R	COM VAULT	CENTURY LINK			X	
692+89 - 694+94	271R - 286R	T-BUR	CENTURY LINK			X	
694+38	276R	TEL PED	CENTURY LINK			X	
694+38 - 694+81	237R - 276R	T-BUR	CENTURY LINK			X	
694+75	78R	TEL MH	CENTURY LINK			X	
694+76 - 694+81	88R - 237R	T-BUR	CENTURY LINK		X		
694+93	297R	TEL PED	CENTURY LINK			X	
694+93 - 694+94	271R - 389R	T-BUR	CENTURY LINK			X	
694+94	271R	TEL PED	CENTURY LINK			X	
695+59 - 707+70	147L - 143L	T-BUR	CENTURY LINK			X	
696+09	78R	TEL MH	CENTURY LINK		X		
696+14	81R	TEL MH	CENTURY LINK		X		
699+37 - 699+45	83R - 88R	COM VAULT	CENTURY LINK		X		1
699+40	87R	TEL MH	CENTURY LINK		X		
700+72	100R	TEL PED	CENTURY LINK			X	
700+72 - 706+25	86R - 100R	T-BUR	CENTURY LINK			X	
702+11	92R	TEL PED	CENTURY LINK			X	
703+38	90R	TEL PED	CENTURY LINK			X	
704+89	94R	TEL PED	CENTURY LINK			X	
705+42 - 705+58	81R - 87R	COM VAULT	CENTURY LINK		X		2
705+48	86R	TEL MH	CENTURY LINK		X		
705+58	86R	TEL MH	CENTURY LINK		X		
705+58 - 705-78	81R - 87R	COM VAULT	CENTURY LINK		X		3
705+66	86R	TEL MH	CENTURY LINK		X		
705+80	86R	TEL MH	CENTURY LINK		X		
706+21 - 706+29	78R	COM VAULT	CENTURY LINK		X		4
706+25	94R	TEL MH	CENTURY LINK		X		

1 VAULT SIZE - 7'6" X 5'6" X 5'6"
2 VAULT SIZE - 16' X 6' X 9'5"
3 VAULT SIZE - 20' X 6' X 11'6"
4 VAULT SIZE - 7'6" X 5'6" X 5'6"

SHEET 3 OF 14

S.P. 179-020-031 S.P. 019-605-028

COMM - CENTURY LINK

INPLACE UTILITY TABULATIONS

DRAWN BY: GLJ | CHECKED BY: HS | CERTIFIED BY _____ LICENSED PROFESSIONAL ENGINEER LIC. NO. 18520 DATE 6/18/12

STATE PROJ. NO. 1901-148 (T.H. 13) SHEET NO. 49 OF 442 SHEETS

PLOTTED/REVISED: 12-JUN-2012 13:33
DISTRICT #: METRO
IPLOT NAME: d1901148_UH1_tb15
FILENAME: Projects/DM_ROS/013/1901/148/Design/PlanSheets/Tabulations/d1901148_UH1_tb.dgn

COMMUNICATION (CENTURY LINK)

STATION TO STATION	OFFSET (FT)	DESCRIPTION	OWNER	REMARKS			NOTES
				ADJUST	RELOCATE	LEAVE AS IS	
706+25 - 706+33	94R - 309R	T-BUR	CENTURY LINK		X		
706+25 - 719+51	94R - 110R	T-BUR	CENTURY LINK		X		
706+41	143L	COM PED	CENTURY LINK			X	
706+92	145L	TEL PED	CENTURY LINK			X	
706+92 - 706+95	238L - 145L	T-BUR	CENTURY LINK			X	
707+70 - 708+12	155L - 145L	T-BUR	CENTURY LINK			X	
708+12 - 708+77	207L - 155L	T-BUR	CENTURY LINK			X	
708+77 - 709+02	276L - 207L	T-BUR	CENTURY LINK			X	
708+91	278L	TEL PED	CENTURY LINK			X	
708+91 - 709+59	278L - 265L	T-BUR	CENTURY LINK			X	
709+01	275L	COM PED	CENTURY LINK			X	
709+21	851L	COM PED	CENTURY LINK			X	
709+53 - 709+56	229L - 99R	T-BUR	CENTURY LINK		X		
709+53 - 709+59	265L - 229L	T-BUR	CENTURY LINK			X	
709+53 - 713+08	229L - 220L	T-BUR	CENTURY LINK		X		
709+58	236L	COM VAULT	CENTURY LINK			X	
709+59 - 709+76	350L - 265L	T-BUR	CENTURY LINK			X	
709+75	324L	TEL PED	CENTURY LINK			X	
713+66 - 713+69	105R - 277R	T-BUR	CENTURY LINK			X	
713+89	96R	TEL PED	CENTURY LINK		X		
714+72	82R	TEL MH	CENTURY LINK		X		
719+80	80R	TEL MH	CENTURY LINK			X	
719+81	83R	TEL MH	CENTURY LINK			X	
719+86	107R	TEL MH	CENTURY LINK			X	

COMMUNICATION (PAETEC)

STATION TO STATION	OFFSET (FT)	DESCRIPTION	OWNER	REMARKS			NOTES
				ADJUST	RELOCATE	LEAVE AS IS	
NBCSAH5							
108+40 - 109+17	870L - 510L	FIBER OPTIC BURIED	PAETEC/SPRINT			X	
108+86 - 111+06	693L - 639L	FIBER OPTIC BURIED	PAETEC/SPRINT			X	
EB13							
660+00 - 692+98	127L - 99L	FIBER OPTIC IN COND	PAETEC/SPRINT		X		
661+21	127L	COM VAULT	PAETEC/SPRINT			X	
676+47	127L	COM VAULT	PAETEC/SPRINT			X	
676+53	122L	COM VAULT	PAETEC/SPRINT			X	
676+53 - 676+70	122L - 68R	FIBER OPTIC BURIED	PAETEC/SPRINT		X		
676+70	68R	COM VAULT	PAETEC			X	
676+70 - 678+38	68R - 104R	FIBER OPTIC BURIED	PAETEC/SPRINT			X	
678+38 - 682+23	98R - 104R	FIBER OPTIC BURIED	PAETEC/SPRINT			X	
682+23 - 682+96	98R - 112R	FIBER OPTIC BURIED	PAETEC			X	
682+96 - 683+77	112R - 171R	FIBER OPTIC BURIED	PAETEC			X	
683+77 - 684+51	171R - 294R	FIBER OPTIC BURIED	PAETEC			X	
686+70 - 690+18	123L - 421R	FIBER OPTIC BURIED	PAETEC		X		
688+90	126L	COM VAULT	PAETEC		X		
688+94	129L	COM VAULT	PAETEC		X		
688+98	127L	COM VAULT	PAETEC		X		
689+30	259R	COM VAULT	PAETEC			X	
689+34	126L	COM VAULT	PAETEC		X		
689+92	126L	COM VAULT	PAETEC			X	
690+18	220R	COM VAULT	PAETEC			X	
712+83	91L	COM VAULT	PAETEC/SPRINT			X	
713+87	96R	COM VAULT	PAETEC		X		
713+87	96R	COM HH	PAETEC		X		

COMMUNICATION (ATT)

STATION TO STATION	OFFSET (FT)	DESCRIPTION	OWNER	REMARKS			NOTES
				ADJUST	RELOCATE	LEAVE AS IS	
NBCSAH5							
100+57 - 104+85	83L - 65L	FIBER OPTIC BURIED	ATT			X	
104+57 - 104+98	570L - 113L	FIBER OPTIC BURIED	ATT			X	
104+77	79L	COM VAULT	ATT		X		
104+85 - 104+98	79L - 113L	FIBER OPTIC BURIED	ATT		X		
109+29 - 109+64	663L - 526L	FIBER OPTIC BURIED	ATT			X	
109+29 - 110+77	698L - 663L	FIBER OPTIC BURIED	ATT			X	
110+66 - 110+77	748L - 698L	FIBER OPTIC BURIED	ATT			X	
115+58 - 116+53	261R - 256R	FIBER OPTIC BURIED	ATT		X		
116+53 - 117+48	256R - 35R	FIBER OPTIC BURIED	ATT		X		
117+48 - 123+36	35R - 88R	FIBER OPTIC BURIED	ATT		X		
123+09 - 123+39	473R - 115R	FIBER OPTIC BURIED	ATT		X		
123+36	88R	COM VAULT	ATT		X		
123+36 - 123+39	88R - 115R	FIBER OPTIC BURIED	ATT		X		
123+67	449R	COM VAULT	ATT			X	
EB13							
686+45 - 689+23	216R - 380R	FIBER OPTIC BURIED	ATT			X	
689+23 - 691+06	165R - 216R	FIBER OPTIC BURIED	ATT		X		
691+06 - 691+77	129R - 165R	FIBER OPTIC BURIED	ATT		X		
691+77 - 692+82	103R - 129R	FIBER OPTIC BURIED	ATT			X	
692+82	103R	COM VAULT	ATT			X	
692+82 - 696+68	95R - 103R	FIBER OPTIC BURIED	ATT		X		
693+14 - 693+27	346L - 177L	FIBER OPTIC BURIED	ATT		X		
693+18	315L	COM VAULT	ATT		X		
693+27 - 693+50	177L - 155L	FIBER OPTIC BURIED	ATT			X	
693+50 - 696+74	155L - 148L	FIBER OPTIC BURIED	ATT			X	
696+68	95R	COM VAULT	ATT		X		
696+68	152L	COM VAULT	ATT			X	
696+68 - 696+74	148L - 95R	FIBER OPTIC BURIED	ATT		X		

COMMUNICATION (EVENTIS)

STATION TO STATION	OFFSET (FT)	DESCRIPTION	OWNER	REMARKS			NOTES
				ADJUST	RELOCATE	LEAVE AS IS	
NBCSAH5							
108+34 - 109+16	878L - 510L	FIBER OPTIC BURIED	EVENTIS			X	
110+69 - 110+73	746L - 744L	FIBER OPTIC BURIED	EVENTIS			X	
110+73 - 110+82	746L - 697L	FIBER OPTIC BURIED	EVENTIS			X	
110+82 - 111+06	702L - 697L	FIBER OPTIC BURIED	EVENTIS			X	
EB13							
676+53 - 676+70	122L - 68R	FIBER OPTIC BURIED	EVENTIS		X		
676+70 - 678+38	68R - 96R	FIBER OPTIC BURIED	EVENTIS			X	
676+79	62R	COM VAULT	EVENTIS			X	
678+38 - 682+24	90R - 96R	FIBER OPTIC BURIED	EVENTIS			X	
682+24 - 682+99	90R - 105R	FIBER OPTIC BURIED	EVENTIS			X	
682+99 - 683+83	105R - 166R	FIBER OPTIC BURIED	EVENTIS			X	
683+83 - 683+91	166R - 210R	FIBER OPTIC BURIED	EVENTIS			X	
683+91 - 684+41	210R - 296R	FIBER OPTIC BURIED	EVENTIS			X	
686+71 - 689+20	271R - 422R	FIBER OPTIC BURIED	EVENTIS			X	
689+01 - 689+03	122L - 77R	FIBER OPTIC BURIED	EVENTIS		X		
689+03 - 689+20	77R - 271R	FIBER OPTIC BURIED	EVENTIS		X		

COMM - ATT
COMM - EVENTIS
COMM - PAETEC
COMM - CENTURY LINK

S.P. 179-020-031 S.P. 019-605-028

SHEET 4 OF 14

INPLACE UTILITY TABULATIONS

DRAWN BY: GLJ | CHECKED BY: HS | CERTIFIED BY LICENSED PROFESSIONAL ENGINEER LIC. NO. 18520 DATE 7/30/12

STATE PROJ. NO. 1901-148 (T.H. 13) SHEET NO. 50 OF 442 SHEETS

DISTRICT #: METRO
IPLOT NAME: d1901148_UHI_tb14
FILENAME: Projects/DM_ROS/013/1901/148/Design/PlanSheets/Tabulations/d1901148_UHI_tbdgn
PLOTTED/REVISED: 30-JUL-2012 09:52

COMMUNICATION (COMCAST)

STATION TO STATION	OFFSET (FT)	DESCRIPTION	OWNER	REMARKS			NOTES
				ADJUST	RELOCATE	LEAVE AS IS	
NBCSAH5							
103+86 - 106+79	344R - 350R	OVERHEAD TELEVISION CABLE	COMCAST			X	
106+12 - 106+27	762L - 644L	TV CABLE	COMCAST			X	
106+27 - 109+42	730L - 644L	TV CABLE	COMCAST			X	
106+43	288L	COM PED	COMCAST			X	
106+69 - 106+86	292L - 219L	TV CABLE	COMCAST			X	
106+69 - 107+73	318L - 292L	TV CABLE	COMCAST			X	
106+79 - 108+09	350R - 355R	OVERHEAD TELEVISION CABLE	COMCAST			X	
107+30 - 107+54	597L - 593L	TV CABLE	COMCAST			X	
107+30 - 107+73	593L - 318L	TV CABLE	COMCAST			X	
107+42 - 107+54	666L - 597L	TV CABLE	COMCAST			X	
109+12 - 109+42	832L - 730L	TV CABLE	COMCAST			X	
109+42 - 111+11	762L - 730L	TV CABLE	COMCAST			X	
EB13							
660+00 - 676+06	105R - 119R	TV CABLE	COMCAST			X	
671+10 - 671+11	105R - 129R	TV CABLE	COMCAST			X	
671+10 - 676+06	129R - 132R	TV CABLE	COMCAST			X	
676+06 - 676+74	132R - 204R	TV CABLE	COMCAST			X	
676+06 - 678+31	119R - 181R	TV CABLE	COMCAST			X	
678+31 - 680+32	181R	TV CABLE	COMCAST			X	
680+32 - 682+67	165R - 181R	TV CABLE	COMCAST			X	
682+67 - 683+25	165R - 200R	TV CABLE	COMCAST			X	
683+25 - 683+82	200R - 309R	TV CABLE	COMCAST			X	
693+88 - 694+70	228R - 290R	TV CABLE	COMCAST		X		
694+29 - 694+34	144L - 97R	TV CABLE	COMCAST		X		
694+29 - 695+37	144L - 141L	TV CABLE	COMCAST			X	
694+34 - 694+95	95R - 386R	OVERHEAD TELEVISION CABLE	COMCAST			X	
694+70 - 696+64	288R - 294R	TV CABLE	COMCAST			X	
694+95 - 700+74	88R - 101R	TV CABLE	COMCAST		X		
695+37 - 696+81	143L - 141L	TV CABLE	COMCAST			X	
696+81 - 696+89	288L - 143L	TV CABLE	COMCAST			X	
696+89 - 697+44	288L - 285L	TV CABLE	COMCAST			X	
699+64 - 699+87	96R - 248R	TV CABLE	COMCAST			X	
700+74 - 720+03	101R - 120R	OVERHEAD TELEVISION CABLE	COMCAST			X	
706+28 - 706+44	99R - 301R	OVERHEAD TELEVISION CABLE	COMCAST			X	

COMMUNICATION (TELECOM)

STATION TO STATION	OFFSET (FT)	DESCRIPTION	OWNER	REMARKS			NOTES
				ADJUST	RELOCATE	LEAVE AS IS	
EB13							
709+58 - 709+70	230L - 223L	FIBER OPTIC BURIED	TELECOM			X	
709+58 - 709+80	347L - 230L	FIBER OPTIC BURIED	TELECOM			X	
709+70 - 709+92	223L - 222L	FIBER OPTIC BURIED	TELECOM			X	
709+92	222L - 181L	FIBER OPTIC BURIED	TELECOM			X	
709+92 - 712+14	181L - 176L	FIBER OPTIC BURIED	TELECOM			X	
712+14 - 712+83	176L - 123L	FIBER OPTIC BURIED	TELECOM			X	
712+83 - 713+20	123L - 99L	FIBER OPTIC BURIED	TELECOM			X	
713+20 - 713+66	115L - 99L	FIBER OPTIC BURIED	TELECOM			X	
713+65 - 713+66	115L - 82R	FIBER OPTIC BURIED	TELECOM		X		
713+65 - 713+88	82R - 91R	FIBER OPTIC BURIED	TELECOM		X		
713+68 - 713+73	115R - 265R	FIBER OPTIC OVERHEAD	TELECOM			X	
713+73 - 713+82	62R - 115R	FIBER OPTIC OVERHEAD	TELECOM		X		
713+82 - 714+92	151L - 62R	FIBER OPTIC OVERHEAD	TELECOM			X	
713+88	91R	COM VAULT	TELECOM		X		
713+88	91R	COM HH	TELECOM		X		

COMMUNICATION (INTEGRA)

STATION TO STATION	OFFSET (FT)	DESCRIPTION	OWNER	REMARKS			NOTES
				ADJUST	RELOCATE	LEAVE AS IS	
NBCSAH5							
108+39 - 108+94	881L - 618L	FIBER OPTIC BURIED	INTEGRA			X	
108+91 - 108+94	618L - 605L	FIBER OPTIC BURIED	INTEGRA			X	
108+91 - 109+12	605L - 508L	FIBER OPTIC BURIED	INTEGRA			X	
110+68 - 111+11	754L - 747L	FIBER OPTIC BURIED	INTEGRA			X	
EB13							
676+59	122L	COM VAULT	INTEGRA			X	
676+59 - 676+78	122L - 121L	FIBER OPTIC BURIED	INTEGRA			X	
676+78 - 676+83	121L - 113L	FIBER OPTIC BURIED	INTEGRA			X	
676+83 - 676+95	59R - 113L	FIBER OPTIC BURIED	INTEGRA		X		
676+95 - 678+42	59R - 91R	FIBER OPTIC BURIED	INTEGRA			X	
678+42 - 682+29	85R - 91R	FIBER OPTIC BURIED	INTEGRA			X	
682+29 - 683+09	85R - 103R	FIBER OPTIC BURIED	INTEGRA			X	
682+85 - 683+09	103R - 162R	FIBER OPTIC BURIED	INTEGRA			X	
682+85 - 683+44	162R - 212R	FIBER OPTIC BURIED	INTEGRA			X	
683+09	103R	COM VAULT	INTEGRA			X	
683+44 - 683+91	212R - 307R	FIBER OPTIC BURIED	INTEGRA			X	
686+73 - 689+27	269R - 426R	FIBER OPTIC BURIED	INTEGRA			X	
688+97	124L	COM VAULT	INTEGRA		X		
689+01 - 689+17	122L - 204R	FIBER OPTIC BURIED	INTEGRA		X		
689+17 - 689+27	204R - 269R	FIBER OPTIC BURIED	INTEGRA		X		
689+30	259R	COM VAULT	INTEGRA			X	

COMMUNICATION (MNDOT/TMS)

STATION TO STATION	OFFSET (FT)	DESCRIPTION	OWNER	REMARKS ①			NOTES
				ADJUST	RELOCATE	LEAVE AS IS	
EB13							
660+00 - 688+38	124L - 113L	FIBER OPTIC IN COND	MNDOT		X		
679+93 - 680+61	60R - 70R	FIBER OPTIC IN COND	MNDOT		X		
680+61 - 688+70	60R - 69R	FIBER OPTIC IN COND	MNDOT		X		
681+07	55R	COM PED	MNDOT		X		
688+38 - 688+49	113L - 105L	FIBER OPTIC IN COND	MNDOT		X		
688+49 - 688+70	105L - 69R	FIBER OPTIC IN COND	MNDOT		X		
688+56 - 689+47	145L - 68R	FIBER OPTIC IN COND	MNDOT		X		
688+70	69R	COM VAULT	MNDOT		X		
688+75 - 690+07	68R - 71R	FIBER OPTIC IN COND	MNDOT		X		
688+88	148L	COM VAULT	MNDOT		X		
689+44	143L	COM VAULT	MNDOT		X		
689+47	145L	COM VAULT	MNDOT		X		
690+07 - 697+05	47R - 71R	FIBER OPTIC IN COND	MNDOT		X		
697+05 - 702+26	47R - 51R	FIBER OPTIC IN COND	MNDOT		X		
702+26 - 706+19	51R - 55R	FIBER OPTIC IN COND	MNDOT		X		
706+19 - 707+13	55R - 70R	FIBER OPTIC IN COND	MNDOT		X		
707+13 - 713+63	70R - 99R	FIBER OPTIC IN COND	MNDOT		X		
713+60 - 713+63	60R - 99R	FIBER OPTIC IN COND	MNDOT		X		
713+60 - 714+61	39R - 60R	FIBER OPTIC IN COND	MNDOT		X		
714+61 - 719+95	39R	FIBER OPTIC IN COND	MNDOT			X	

① FOR PLANS, DETAILS AND QUANTITIES, SEE SHEET NO. SZ1 TO SZ23.
ALL WORK TO BE DONE BY PROJECT CONTRACTOR.

COMM - COMCAST
COMM - INTEGRA
COMM - MNDOT
COMM - TELECOM

SHEET 5 OF 14

S.P. 179-020-031 S.P. 019-605-028

INPLACE UTILITY TABULATIONS

DRAWN BY: GLJ | CHECKED BY: HS | CERTIFIED BY _____ LICENSED PROFESSIONAL ENGINEER | LIC. NO. 18520 DATE 6/18/12

STATE PROJ. NO. 1901-148 (T.H. 13) SHEET NO. 51 OF 442 SHEETS

PLOTTED/REVISED: 12-JUN-2012 13:33
DISTRICT #: METRO
IPLOT NAME: d1901148_UHI_tbl3
FILENAME: Projects/DM_ROS/013/1901/148/Design/PlanSheets/Tabulations/d1901148_UHI_tb.dgn

COMMUNICATION (CHARTER COMMUNICATIONS)

STATION TO STATION	OFFSET (FT)	DESCRIPTION	OWNER	REMARKS			NOTES
				ADJUST	RELOCATE	LEAVE AS IS	
NBCSAH5							
101+90 - 108+51	99L - 75L	TV CABLE	CHARTER COMMUNICATIONS			X	
104+71	75L	COM VAULT	CHARTER COMMUNICATIONS		X		
EB13							
660+00 - 688+64	133L - 122L	TV CABLE	CHARTER COMMUNICATIONS		X		
676+64	122L	COM VAULT	CHARTER COMMUNICATIONS			X	
688+64	129L	COM VAULT	CHARTER COMMUNICATIONS		X		
688+64 - 690+38	129L - 399R	TV CABLE	CHARTER COMMUNICATIONS		X		

COMMUNICATION (SPRINT)

STATION TO STATION	OFFSET (FT)	DESCRIPTION	OWNER	REMARKS			NOTES
				ADJUST	RELOCATE	LEAVE AS IS	
EB13							
688+87	130L	COM VAULT	SPRINT		X		
692+98 - 708+15	101L - 80L	FIBER OPTIC IN COND	SPRINT			X	
708+15 - 712+83	91L - 80L	FIBER OPTIC IN COND	SPRINT			X	
712+83 - 712+94	91L - 69R	FIBER OPTIC IN COND	SPRINT			X	
712+94 - 713+02	69R - 77R	FIBER OPTIC IN COND	SPRINT		X		
713+02 - 719+40	77R - 102R	FIBER OPTIC IN COND	SPRINT		X		

COMMUNICATION (XCEL)

STATION TO STATION	OFFSET (FT)	DESCRIPTION	OWNER	REMARKS			NOTES
				ADJUST	RELOCATE	LEAVE AS IS	
NBCSAH5							
118+75	892L	COM TOWER	XCEL	X			
119+70	904L	COM TOWER	XCEL	X			
121+30	545R	COM TOWER	XCEL	X			
122+23	529R	COM TOWER	XCEL	X			
EB13							
668+06	156R	COM TOWER	XCEL			X	
669+15	197R	COM TOWER	XCEL			X	
712+53	924L	COM TOWER	XCEL			X	
712+68	826L	COM TOWER	XCEL			X	

POWER (XCEL)

STATION TO STATION	OFFSET (FT)	DESCRIPTION	OWNER	REMARKS			OTHER UTILITIES
				ADJUST	RELOCATE	LEAVE AS IS	
NBCSAH5							
102+13	316R	P POLE	XCEL			X	
103+57	386R	P POLE	XCEL			X	
103+70	15R	P HH	XCEL		X		
103+77	344R	P POLE	XCEL			X	
103+86	344R	P POLE	XCEL			X	
103+88	358R	P PED	XCEL			X	
104+01	347R	ANC	XCEL			X	
104+09	343R	ANC	XCEL			X	
104+56	580L	P MH	XCEL			X	
104+61	462L	P PED	XCEL			X	
104+63	649L	P MH	XCEL			X	
104+69	550L	P MH	XCEL			X	
104+81	235L	P PED	XCEL			X	
104+89	296L	P HH	XCEL		X		
104+98	552L	P MH	XCEL		X		
104+99	196L	P HH	XCEL		X		
105+07	120L	P HH	XCEL		X		
105+07	26L	P HH	XCEL		X		
105+08	334R	P POLE	XCEL		X		
105+08 - 108+09	334R - 356R	OVERHEAD ELECTRIC LINE	XCEL		X		
105+10	21R	P HH	XCEL		X		
105+10	324R	ANC	XCEL		X		
105+23	657L	P MH	XCEL		X		
105+27	338R	P HH	XCEL		X		
105+31	343R	P HH	XCEL		X		
105+36	558L	P MH	XCEL		X		
105+50	632L	P MH	XCEL			X	
105+53	583L	P MH	XCEL		X		
105+53	585L	P MH	XCEL		X		
105+57	84L	P HH	XCEL		X		
105+63	325L	P MH	XCEL		X		
105+77	213L	P MH	XCEL		X		
105+83	39R	P HH	XCEL		X		
105+84	64R	P PED	XCEL		X		
105+85	64R	P VAULT	XCEL		X		
105+92	87L	P HH	XCEL		X		
106+24	14L	P HH	XCEL		X		
106+44	241L	P PED	XCEL			X	
106+79	350R	P POLE	XCEL			X	
106+96	238R	P PED	XCEL			X	
107+23	353R	P POLE	XCEL			X	
107+62	315L	P PED	XCEL			X	
107+64	74L	P HH	XCEL		X		
108+04	1256L	P POLE	XCEL			X	
108+39	1110L	P POLE	XCEL			X	
108+52	841L	P POLE	XCEL			X	
108+78	942L	P POLE	XCEL			X	
109+01 - 109+82	830L - 532L	OVERHEAD ELECTRIC LINE	XCEL			X	
109+18	772L	P POLE	XCEL			X	
109+31	720L	P POLE	XCEL			X	
109+52 - 109+68	648L - 642L	P-BUR	XCEL			X	
109+58	624L	P POLE	XCEL			X	
109+65 - 109+68	663L - 648L	P-BUR	XCEL			X	
109+65 - 111+06	697L - 663L	P-BUR	XCEL			X	
110+94	803L	P PED	XCEL			X	
116+80	75L	P HH	XCEL		X		
116+82 - 120+02	240L - 191L	P-BUR	XCEL		X		

COMM - CHARTER
COMM - SPRINT
COMM - XCEL
POWER - XCEL

SHEET 6 OF 14

S.P. 179-020-031 S.P. 019-605-028

INPLACE UTILITY TABULATIONS

DRAWN BY: GLJ | CHECKED BY: HS | CERTIFIED BY LICENSED PROFESSIONAL ENGINEER LIC. NO. 18520 DATE 6/18/12

STATE PROJ. NO. 1901-148 (T.H. 13) SHEET NO. 52 OF 442 SHEETS

DISTRICT #: METRO
IPLOT NAME: d1901148_UHI_tb2
FILENAME: Projects/DM_ROS/013/1901/148/Design/PlanSheets/Tabulations/d1901148_UHI_tb.dgn
PLOTTED/REVISED: 12-JUN-2012 13:33

POWER (XCEL)

STATION TO STATION	OFFSET (FT)	DESCRIPTION	OWNER	REMARKS			OTHER UTILITIES
				ADJUST	RELOCATE	LEAVE AS IS	
116+84	82L	P HH	XCEL		X		
117+43	235L	P PED	XCEL		X		
117+43 - 117+44	252L - 72L	P-BUR	XCEL		X		
117+43 - 120+82	72L - 49L	P-BUR	XCEL		X		
117+44 - 117+63	253L - 252L	P-BUR	XCEL		X		
117+46 - 118+06	663L - 662L	P-BUR	XCEL			X	
117+63 - 117+69	371L - 253L	P-BUR	XCEL			X	
117+69 - 118+71	593L - 371L	P-BUR	XCEL			X	
117+99	738L	P PED	XCEL			X	
117+99 - 118+06	738L - 663L	P-BUR	XCEL			X	
118+01	741L	P PED	XCEL			X	
118+04	739L	P PED	XCEL			X	
118+04 - 118+09	739L - 663L	P-BUR	XCEL			X	
118+09 - 118+81	679L - 663L	P-BUR	XCEL		X		
118+71 - 118+81	679L - 593L	P-BUR	XCEL		X		
118+80	679L	P PED	XCEL		X		
118+83 - 120+92	907L - 238R	OVERHEAD ELECTRIC LINE	XCEL	X			
119+29	250L	P PED	XCEL			X	
119+63 - 121+66	991L - 92R	OVERHEAD ELECTRIC LINE	XCEL	X			
119+72 - 123+26	1006L - 1001L	P-BUR	XCEL			X	
120+41	1022L	P PED	XCEL			X	
120+82 - 124+72	49L - 81R	P-BUR	XCEL		X		
123+16 - 123+34	245R - 473R	P-BUR	XCEL		X		
123+34 - 124+72	81R - 245R	P-BUR	XCEL		X		
127+36	489L	P PED	XCEL			X	
EB13							
660+00 - 676+54	219L - 199L	P-BUR	XCEL			X	
660+96	333L	P PED	XCEL			X	
664+82	277R	P POLE	XCEL			X	
666+00	370L	P POLE	XCEL			X	
668+02 - 679+11	436L - 152R	OVERHEAD ELECTRIC LINE	XCEL			X	
668+82	198L	P PED	XCEL			X	
669+13 - 680+15	384L - 193R	OVERHEAD ELECTRIC LINE	XCEL			X	
670+45	381R	P PED	XCEL			X	
671+17 - 671+88	123R - 347R	P-BUR	XCEL			X	
671+17 - 673+80	123R	P-BUR	XCEL			X	
673+67	105R	P PED	XCEL			X	
673+80	109R	P PED	XCEL			X	
673+80 - 674+23	123R - 269R	P-BUR	XCEL			X	
673+86	112R	P PED	XCEL			X	
673+91 - 674+40	114R - 270R	P-BUR	XCEL			X	
673+91 - 676+09	114R - 121R	P-BUR	XCEL			X	
674+29	651L	P PED	XCEL			X	
674+32	641L	P PED	XCEL			X	
675+84	117R	ANC	XCEL			X	
676+09	122R	P POLE	XCEL			X	
676+09 - 678+29	121R - 158R	OVERHEAD ELECTRIC LINE	XCEL		X		
676+54	218L	P PED	XCEL			X	
676+54 - 678+96	284L - 219L	P-BUR	XCEL			X	
676+74	204R	P POLE	XCEL			X	
678+29	158R	P POLE	XCEL			X	
678+29 - 678+38	104R - 158R	P-BUR	XCEL			X	
678+29 - 679+92	156R - 158R	OVERHEAD ELECTRIC LINE	XCEL			X	
678+38 - 682+26	100R - 104R	P-BUR	XCEL			X	
678+96 - 679+50	284L - 157L	P-BUR	XCEL			X	
678+98 - 679+94	442L - 150L	P-BUR	XCEL			X	
679+50	156L	P POLE	XCEL			X	
679+50 - 694+05	157L - 141L	OVERHEAD ELECTRIC LINE	XCEL			X	

POWER (XCEL)

STATION TO STATION	OFFSET (FT)	DESCRIPTION	OWNER	REMARKS			OTHER UTILITIES
				ADJUST	RELOCATE	LEAVE AS IS	
679+83	318L	P PED	XCEL			X	
679+92	156R	P POLE	XCEL			X	
679+92 - 679+94	150L - 156R	OVERHEAD ELECTRIC LINE	XCEL			X	
679+92 - 681+47	152R - 156R	P-BUR	XCEL			X	
679+93	186L	P POLE	XCEL			X	
679+93	70R	P POLE	XCEL		X		
679+94	150L	P POLE	XCEL			X	
680+10	156R	ANC	XCEL			X	
680+53	148L	P POLE	XCEL			X	
681+47 - 681+86	152R - 270R	P-BUR	XCEL			X	
682+11	150L	P POLE	XCEL		X		
682+26 - 683+74	100R - 174R	P-BUR	XCEL			X	
682+89 - 683+42	326L - 158L	P-BUR	XCEL			X	
683+42 - 684+14	158L - 148L	P-BUR	XCEL			X	
683+74 - 684+46	174R - 295R	P-BUR	XCEL			X	
684+14	148L	P POLE	XCEL		X		
685+56	148L	P POLE	XCEL		X		
686+08 - 687+81	282L - 148L	P-BUR	XCEL		X		
686+16	148L	P POLE	XCEL		X		
686+35 - 688+81	210R - 364R	OVERHEAD ELECTRIC LINE	XCEL		X		
686+90	328R	P POLE	XCEL			X	
687+13 - 687+66	370L - 276L	P-BUR	XCEL		X		
687+29	397R	P POLE	XCEL			X	
687+29 - 687+65	388L - 368L	P-BUR	XCEL		X		
687+88	265R	P POLE	XCEL			X	
687+89	154L	P PED	XCEL		X		
688+76	139L	ANC	XCEL		X		
688+81	150L	P POLE	XCEL		X		
688+81	210R	P POLE	XCEL			X	
688+81 - 694+34	97R - 210R	OVERHEAD ELECTRIC LINE	XCEL			X	
689+42	154L	P PED	XCEL		X		
689+48	141L	P POLE	XCEL		X		
689+48 - 690+59	293L - 141L	OVERHEAD ELECTRIC LINE	XCEL		X		
689+53	143L	P HH	XCEL		X		
689+60	222L	P HH	XCEL		X		
689+62	41R	P HH	XCEL		X		
689+75	103L	P HH	XCEL		X		
690+33	391R	P PED	XCEL			X	
690+38	117L	P HH	XCEL		X		
690+51	44R	P HH	XCEL		X		
690+59	293L	P POLE	XCEL		X		
690+60	358R	P HH	XCEL		X		
690+66	296L	ANC	XCEL		X		
690+96	105L	P HH	XCEL		X		
690+99	43R	P HH	XCEL		X		
691+03	96L	P HH	XCEL		X		
691+23	169R	P HH	XCEL		X		
691+41	147L	P POLE	XCEL		X		
691+70	131R	P POLE	XCEL			X	
692+62 - 692+66	203L - 147L	P-BUR	XCEL			X	
692+62 - 694+26	204L - 203L	P-BUR	XCEL			X	
692+66	147L	P POLE	XCEL			X	
692+95	101R	P POLE	XCEL		X		
694+05	147L	P POLE	XCEL			X	
694+05 - 694+34	147L - 97R	OVERHEAD ELECTRIC LINE	XCEL		X		
694+19	147L	ANC	XCEL			X	
694+24	147L	ANC	XCEL			X	
694+26 - 694+80	204L - 154L	P-BUR	XCEL			X	

S.P. 179-020-031 S.P. 019-605-028

POWER - XCEL

INPLACE UTILITY TABULATIONS

DRAWN BY: GLJ | CHECKED BY: HS | CERTIFIED BY LICENSED PROFESSIONAL ENGINEER LIC. NO. 18520 DATE 6/18/12

STATE PROJ. NO. 1901-148 (T.H. 13) SHEET NO. 53 OF 442 SHEETS

DISTRICT #: METRO
IPLOT NAME: d1901148_UH1_tbl
FILENAME: Projects/DM_ROS/013/1901/148/Design/PlanSheets/Tabulations/d1901148_UH1_tb.dgn
PLOTTED/REVISED: 12-JUN-2012 13:33

POWER (XCEL)

STATION TO STATION	OFFSET (FT)	DESCRIPTION	OWNER	REMARKS			OTHER UTILITIES
				ADJUST	RELOCATE	LEAVE AS IS	
694+34	97R	P POLE	XCEL		X		
694+34 - 694+42	97R - 386R	OVERHEAD ELECTRIC LINE	XCEL			X	
694+35	317R	P PED	XCEL			X	
694+35	324R	P PED	XCEL			X	
694+39	271R	P POLE	XCEL			X	
694+80 - 709+58	239L - 143L	P-BUR	XCEL			X	
694+95	95R	P POLE	XCEL		X		
695+05	94R	ANC	XCEL		X		
695+57	184L	P PED	XCEL			X	
699+69	203R	P POLE	XCEL			X	
699+83	152L	P PED	XCEL			X	
700+74	101R	P POLE	XCEL			X	
700+74 - 720+03	91R - 121R	OVERHEAD ELECTRIC LINE	XCEL		X		
702+11	94R	P POLE	XCEL		X		
702+72	443R	P POLE	XCEL			X	
703+25	151L	P PED	XCEL			X	
703+38	91R	P POLE	XCEL		X		
703+82	443R	P POLE	XCEL			X	
704+85	99R	P POLE	XCEL		X		
706+16	97R	ANC	XCEL		X		
706+19	446R	P POLE	XCEL			X	
706+28	301R	P POLE	XCEL			X	
706+34	99R	P POLE	XCEL		X		
706+44	148R	P POLE	XCEL		X		
706+45	134R	ANC	XCEL			X	
706+46	131R	ANC	XCEL			X	
706+98	143L	P PED	XCEL			X	
706+98	143L	P PED	XCEL			X	
707+40	449R	P POLE	XCEL			X	
707+71	100R	P POLE	XCEL		X		
708+90	453R	P POLE	XCEL			X	
708+94	281L	P PED	XCEL		X		
708+94	281L	P PED	XCEL		X		
709+19	105R	P POLE	XCEL			X	
709+57	239L	P PED	XCEL			X	
709+58	239L	P PED	XCEL			X	
709+58 - 713+34	239L - 229L	P-BUR	XCEL			X	
710+43	455R	P POLE	XCEL			X	
710+70	108R	P POLE	XCEL			X	
710+96	947L	P PED	XCEL			X	
711+67	453R	P POLE	XCEL			X	
712+24	114R	P POLE	XCEL			X	
712+92	357L	P POLE	XCEL			X	
713+03	218L	P POLE	XCEL		X		
713+08	199L	ANC	XCEL		X	X	
713+30	324L	P POLE	XCEL			X	
713+33	355L	P POLE	XCEL			X	
713+34 - 714+50	229L - 171L	P-BUR	XCEL			X	
713+72	131R	ANC	XCEL			X	
713+73	115R	P POLE	XCEL			X	
714+24	149L	P POLE	XCEL			X	
714+50 - 715+98	176L - 171L	P-BUR	XCEL			X	
714+96	142L	P POLE	XCEL			X	
714+98	84R	P METER	XCEL		X		
715+03	84R	P METER	XCEL		X		
715+03 - 717+55	168L - 119R	OVERHEAD ELECTRIC LINE	XCEL		X		
715+70	154L	P POLE	XCEL			X	

POWER (XCEL)

STATION TO STATION	OFFSET (FT)	DESCRIPTION	OWNER	REMARKS			OTHER UTILITIES
				ADJUST	RELOCATE	LEAVE AS IS	
715+98 - 715+99	176L - 158L	P-BUR	XCEL			X	
717+61	163L	P POLE	XCEL			X	
718+24	122R	P POLE	XCEL			X	
719+22	171L	P POLE	XCEL			X	
720+03	120R	P POLE	XCEL			X	
720+58	118R	P POLE	XCEL			X	
720+97	166L	P POLE	XCEL			X	
722+01	236L	P POLE	XCEL			X	
722+48	312L	P POLE	XCEL			X	
722+86	256L	P POLE	XCEL			X	
722+91	238L	ANC	XCEL			X	
723+01	426R	P PED	XCEL			X	
723+52	305L	P POLE	XCEL			X	

POWER (MNDOT) - TRAFFIC SIGNALS

STATION TO STATION	OFFSET (FT)	DESCRIPTION	OWNER	REMARKS ①			OTHER UTILITIES
				ADJUST	RELOCATE	LEAVE AS IS	
NBCSAH5							
116+36 - 116+84	82L - 63L	SIG WIRE	MNDOT		X		
EB13							
660+00 - 688+91	118L - 109L	SIG-INT	MNDOT		X		
685+68 - 689+62	27R - 41R	SIG WIRE	MNDOT		X		
688+91 - 689+28	119L - 109L	SIG-INT	MNDOT		X		
689+28 - 689+53	143L - 119L	SIG-INT	MNDOT		X		
689+37 - 689+63	382L - 143L	SIG WIRE	MNDOT		X		
689+47 - 689+75	145L - 41R	SIG WIRE	MNDOT		X		
689+62 - 689+96	41R - 49R	SIG WIRE	MNDOT		X		
689+62 - 690+99	41R - 44R	SIG WIRE	MNDOT		X		
689+68 - 689+93	33L - 30L	SIG WIRE	MNDOT		X		
689+75 - 689+82	103L - 97L	SIG WIRE	MNDOT		X		
689+75 - 690+76	122L - 103L	SIG WIRE	MNDOT		X		
689+82	97L	TRAFFIC SIG LIGHT	MNDOT		X		
689+93	30L	TRAFFIC SIG LIGHT	MNDOT		X		
689+96	49R	TRAFFIC SIG LIGHT	MNDOT		X		
690+76 - 690+88	122L - 105L	SIG WIRE	MNDOT		X		
690+76 - 690+93	122L - 108L	SIG WIRE	MNDOT		X		
690+88 - 691+21	105L - 91L	SIG WIRE	MNDOT		X		
690+93	108L	TRAFFIC SIG LIGHT	MNDOT		X		
690+98	17L	TRAFFIC SIG LIGHT	MNDOT		X		
690+98 - 691+08	96L - 17L	SIG WIRE	MNDOT		X		
690+99 - 691+05	36R - 43R	SIG WIRE	MNDOT		X		
690+99 - 691+25	43R - 64R	SIG WIRE	MNDOT		X		
691+05	36R	TRAFFIC SIG LIGHT	MNDOT		X		
691+17 - 691+23	86R - 169R	SIG WIRE	MNDOT		X		
691+17 - 691+25	64R - 86R	SIG WIRE	MNDOT		X		
691+21 - 695+40	94L - 91L	SIG WIRE	MNDOT		X		

① FOR PLANS, DETAILS AND QUANTITIES, SEE SHEET NO. SS1 TO SS31.

ALL WORK TO BE DONE BY PROJECT CONTRACTOR.

POWER - XCEL
POWER - MNDOT

S.P. 179-020-031 S.P. 019-605-028

INPLACE UTILITY TABULATIONS

DRAWN BY: GLJ | CHECKED BY: HS | CERTIFIED BY _____ LICENSED PROFESSIONAL ENGINEER | LIC. NO. 18520 DATE 6/18/12

STATE PROJ. NO. 1901-148 (T.H. 13) SHEET NO. 54 OF 442 SHEETS

DISTRICT #: METRO
IPLOT NAME: d1901148_UH1_tb
FILENAME: Projects/DM_ROS/013/1901/148/Design/PlanSheets/Tabulations/d1901148_UH1_tb.dgn
PLOTTED/REVISED: 14-JUN-2012 09:29

POWER (CITY OF BURNSVILLE)

STATION TO STATION	OFFSET (FT)	DESCRIPTION	OWNER	REMARKS ①			OTHER UTILITIES
				ADJUST	RELOCATE	LEAVE AS IS	
NBCSAH5							
101+46	274L	L POLE	BURNSVILLE			X	
102+12	166R	L POLE	BURNSVILLE			X	
102+20	107R	L POLE	BURNSVILLE			X	
102+20	574R	L POLE	BURNSVILLE			X	
102+70	175R	L POLE	BURNSVILLE			X	
102+72	634R	L POLE	BURNSVILLE			X	
102+78	260R	L POLE	BURNSVILLE			X	
102+79	116R	L POLE	BURNSVILLE			X	
104+83	364L	L POLE	BURNSVILLE		X		
105+89	231L	L POLE	BURNSVILLE		X		
106+49	98L	L POLE	BURNSVILLE			X	
106+64	286L	L POLE	BURNSVILLE			X	
107+17	524R	L POLE	BURNSVILLE			X	
107+22	450R	L POLE	BURNSVILLE			X	
107+31	301L	L POLE	BURNSVILLE			X	
107+34	98L	L POLE	BURNSVILLE			X	
107+38	149R	L POLE	BURNSVILLE			X	
107+60	263L	L POLE	BURNSVILLE			X	
107+76	171L	L POLE	BURNSVILLE			X	
108+17	398L	L POLE	BURNSVILLE			X	
116+82	258L	L POLE	BURNSVILLE		X		
116+94	380L	L POLE	BURNSVILLE		X		
117+60	267L	L POLE	BURNSVILLE		X		
117+61	218L	L POLE	BURNSVILLE		X		
117+62	169L	L POLE	BURNSVILLE		X		
117+65	318L	L POLE	BURNSVILLE		X		
117+99	401L	L POLE	BURNSVILLE			X	
118+18	115L	L POLE	BURNSVILLE		X		
118+28	232L	L POLE	BURNSVILLE			X	
118+67	116L	L POLE	BURNSVILLE			X	
118+89	476L	L POLE	BURNSVILLE			X	
119+17	115L	L POLE	BURNSVILLE			X	
119+21	672L	L POLE	BURNSVILLE		X		
119+24	541L	L POLE	BURNSVILLE			X	
119+36	232L	L POLE	BURNSVILLE			X	
119+39	267L	L POLE	BURNSVILLE			X	
119+53	128L	L POLE	BURNSVILLE		X		
119+84	747L	L POLE	BURNSVILLE			X	
119+86	831L	L POLE	BURNSVILLE			X	
120+06	461L	L POLE	BURNSVILLE			X	
120+08	361L	L POLE	BURNSVILLE			X	
120+10	261L	L POLE	BURNSVILLE			X	
120+26	869L	L POLE	BURNSVILLE			X	
120+34	665R	L POLE	BURNSVILLE			X	
120+52	693L	L POLE	BURNSVILLE			X	
120+65	1092L	L POLE	BURNSVILLE			X	
121+21	891L	L POLE	BURNSVILLE			X	
122+04	907L	L POLE	BURNSVILLE			X	
122+17	1091L	L POLE	BURNSVILLE			X	
122+61	708R	L POLE	BURNSVILLE			X	
122+76	907L	L POLE	BURNSVILLE			X	
122+79	956R	L POLE	BURNSVILLE			X	
123+71	1270L	L POLE	BURNSVILLE			X	
123+71	1091L	L POLE	BURNSVILLE			X	
123+72	597L	L POLE	BURNSVILLE			X	
123+81	472L	L POLE	BURNSVILLE			X	

① ALL RELOCATES TO DONE BY OTHERS.

POWER (CITY OF BURNSVILLE)

STATION TO STATION	OFFSET (FT)	DESCRIPTION	OWNER	REMARKS			OTHER UTILITIES
				ADJUST	RELOCATE	LEAVE AS IS	
123+82	1010R	L POLE	BURNSVILLE			X	
123+91	351L	L POLE	BURNSVILLE			X	
124+01	221L	L POLE	BURNSVILLE			X	
124+55	1059L	L POLE	BURNSVILLE			X	
124+62	732L	L POLE	BURNSVILLE			X	
125+09	124L	L POLE	BURNSVILLE			X	
125+40	1095R	L POLE	BURNSVILLE			X	
125+58	741L	L POLE	BURNSVILLE			X	
126+14	135L	L POLE	BURNSVILLE			X	
126+68	633R	L POLE	BURNSVILLE			X	
126+79	790R	L POLE	BURNSVILLE			X	
126+92	948R	L POLE	BURNSVILLE			X	
127+02	119L	L POLE	BURNSVILLE			X	
127+95	1088R	L POLE	BURNSVILLE			X	
128+38	125L	L POLE	BURNSVILLE			X	
129+16	490R	L POLE	BURNSVILLE			X	
129+23	611R	L POLE	BURNSVILLE			X	
129+40	768R	L POLE	BURNSVILLE			X	
129+48	147L	L POLE	BURNSVILLE			X	
130+20	289L	L POLE	BURNSVILLE			X	
130+67	477R	L POLE	BURNSVILLE			X	
EB13							
660+11	231L	L POLE	BURNSVILLE			X	
660+23	536L	L POLE	BURNSVILLE			X	
660+29	269R	L POLE	BURNSVILLE			X	
660+76	398L	L POLE	BURNSVILLE			X	
660+82	271L	L POLE	BURNSVILLE			X	
661+02	317L	L POLE	BURNSVILLE			X	
661+03	179L	L POLE	BURNSVILLE			X	
661+22	279R	L POLE	BURNSVILLE			X	
661+30	216L	L POLE	BURNSVILLE			X	
661+76	156R	L POLE	BURNSVILLE			X	
661+80	373L	L POLE	BURNSVILLE			X	
662+19	248L	L POLE	BURNSVILLE			X	
662+42	277R	L POLE	BURNSVILLE			X	
662+99	224L	L POLE	BURNSVILLE			X	
663+08	417L	L POLE	BURNSVILLE			X	
663+20	156R	L POLE	BURNSVILLE			X	
663+35	178L	L POLE	BURNSVILLE			X	
663+48	291L	L POLE	BURNSVILLE			X	
663+61	276R	L POLE	BURNSVILLE			X	
664+37	225L	L POLE	BURNSVILLE			X	
664+39	441L	L POLE	BURNSVILLE			X	
664+85	293L	L POLE	BURNSVILLE			X	
665+00	178L	L POLE	BURNSVILLE			X	
665+62	490L	L POLE	BURNSVILLE			X	
666+09	150R	L POLE	BURNSVILLE			X	
666+30	277R	L POLE	BURNSVILLE			X	
666+45	225L	L POLE	BURNSVILLE			X	
666+87	530L	L POLE	BURNSVILLE			X	
667+18	178L	L POLE	BURNSVILLE			X	
667+26	409L	L POLE	BURNSVILLE			X	
667+64	288L	L POLE	BURNSVILLE			X	
668+14	569L	L POLE	BURNSVILLE			X	
668+52	448L	L POLE	BURNSVILLE			X	
668+52	226L	L POLE	BURNSVILLE			X	
668+72	178L	L POLE	BURNSVILLE			X	

S.P. 179-020-031 S.P. 019-605-028

INPLACE UTILITY TABULATIONS

DRAWN BY: GLJ | CHECKED BY: HS | CERTIFIED BY _____ LICENSED PROFESSIONAL ENGINEER LIC. NO. 18520 DATE 6/18/12

STATE PROJ. NO. 1901-148 (T.H. 13) SHEET NO. 55 OF 442 SHEETS

DISTRICT #: METRO
IPLOT NAME: d1901148_UHI_tb
FILENAME: Projects/DM_ROS/013/1901/148/Design/PlanSheets/Tabulations/d1901148_UHI_tb.dgn
PLOTTED/REVISED: 14-JUN-2012 09:30

POWER (CITY OF BURNSVILLE)

STATION TO STATION	OFFSET (FT)	DESCRIPTION	OWNER	REMARKS ①			OTHER UTILITIES
				ADJUST	RELOCATE	LEAVE AS IS	
668+81	591L	L POLE	BURNSVILLE			X	
668+90	328L	L POLE	BURNSVILLE			X	
669+25	471L	L POLE	BURNSVILLE			X	
669+63	351L	L POLE	BURNSVILLE			X	
670+01	227L	L POLE	BURNSVILLE			X	
670+80	178L	L POLE	BURNSVILLE			X	
671+86	303L	L POLE	BURNSVILLE			X	
672+43	165R	L POLE	BURNSVILLE			X	
672+97	280L	L POLE	BURNSVILLE			X	
673+09	177L	L POLE	BURNSVILLE			X	
673+54	143R	L POLE	BURNSVILLE			X	
673+90	366L	L POLE	BURNSVILLE			X	
675+35	178L	L POLE	BURNSVILLE			X	
675+67	595L	L POLE	BURNSVILLE			X	
676+12	450L	L POLE	BURNSVILLE			X	
677+45	205L	L POLE	BURNSVILLE			X	
679+20	278L	L POLE	BURNSVILLE			X	
680+46	257L	L POLE	BURNSVILLE			X	
682+77	222R	L POLE	BURNSVILLE			X	
684+88	248L	L POLE	BURNSVILLE		X		
685+93	253L	L POLE	BURNSVILLE		X		
687+48	291L	L POLE	BURNSVILLE		X		
688+31	347R	L POLE	BURNSVILLE			X	
688+42	239L	L POLE	BURNSVILLE		X		
689+13	297R	L POLE	BURNSVILLE			X	
689+65	277R	L POLE	BURNSVILLE			X	
690+41	302R	L POLE	BURNSVILLE			X	
690+75	200L	L POLE	BURNSVILLE		X		
690+90	157L	L POLE	BURNSVILLE		X		
691+39	162R	L POLE	BURNSVILLE		X		
691+43	281R	L POLE	BURNSVILLE		X		
692+35	122R	L POLE	BURNSVILLE			X	
692+54	343R	L POLE	BURNSVILLE			X	
692+57	158L	L POLE	BURNSVILLE			X	
692+91	177R	L POLE	BURNSVILLE			X	
693+62	109R	L POLE	BURNSVILLE			X	
693+64	141L	L POLE	BURNSVILLE			X	
693+70	274R	L POLE	BURNSVILLE			X	
694+37	168R	L POLE	BURNSVILLE			X	
695+04	159L	L POLE	BURNSVILLE			X	
695+35	300R	L POLE	BURNSVILLE			X	
695+96	144L	L POLE	BURNSVILLE			X	
696+06	301R	L POLE	BURNSVILLE			X	
696+28	54R	L POLE	BURNSVILLE		X		
696+70	203L	L POLE	BURNSVILLE			X	
696+75	300L	L POLE	BURNSVILLE			X	
696+97	154L	L POLE	BURNSVILLE			X	
698+09	145L	L POLE	BURNSVILLE			X	
698+29	55R	L POLE	BURNSVILLE		X		
698+51	155L	L POLE	BURNSVILLE			X	
699+04	187L	L POLE	BURNSVILLE			X	
699+17	345L	L POLE	BURNSVILLE			X	
699+27	163L	L POLE	BURNSVILLE			X	
699+80	192L	L POLE	BURNSVILLE			X	
699+91	255L	L POLE	BURNSVILLE			X	
700+15	247R	L POLE	BURNSVILLE			X	
700+23	55R	L POLE	BURNSVILLE		X		
700+36	145L	L POLE	BURNSVILLE			X	

POWER (CITY OF BURNSVILLE)

STATION TO STATION	OFFSET (FT)	DESCRIPTION	OWNER	REMARKS ①			OTHER UTILITIES
				ADJUST	RELOCATE	LEAVE AS IS	
701+37	187L	L POLE	BURNSVILLE			X	
702+10	199L	L POLE	BURNSVILLE			X	
702+22	54R	L POLE	BURNSVILLE		X		
702+25	258L	L POLE	BURNSVILLE			X	
703+03	147L	L POLE	BURNSVILLE			X	
703+11	248R	L POLE	BURNSVILLE			X	
703+31	189L	L POLE	BURNSVILLE			X	
704+16	53R	L POLE	BURNSVILLE		X		
704+57	222L	L POLE	BURNSVILLE			X	
704+61	145L	L POLE	BURNSVILLE			X	
704+82	375L	L POLE	BURNSVILLE			X	
705+21	155L	L POLE	BURNSVILLE			X	
705+69	154L	L POLE	BURNSVILLE			X	
705+99	516L	L POLE	BURNSVILLE			X	
706+13	153L	L POLE	BURNSVILLE			X	
706+16	58R	L POLE	BURNSVILLE		X		
706+23	214L	L POLE	BURNSVILLE			X	
706+97	206L	L POLE	BURNSVILLE			X	
707+02	58R	L POLE	BURNSVILLE		X		
707+03	149L	L POLE	BURNSVILLE			X	
707+44	150L	L POLE	BURNSVILLE			X	
707+72	206L	L POLE	BURNSVILLE			X	
707+92	144L	L POLE	BURNSVILLE			X	
707+94	151L	L POLE	BURNSVILLE			X	
708+30	175L	L POLE	BURNSVILLE			X	
709+51	124L	L POLE	BURNSVILLE		X		
709+58	229L	L POLE	BURNSVILLE		X		
710+13	228L	L POLE	BURNSVILLE		X		
710+14	904L	L POLE	BURNSVILLE			X	
710+75	227L	L POLE	BURNSVILLE		X		
711+63	227L	L POLE	BURNSVILLE		X		
711+71	219L	L POLE	BURNSVILLE		X		
712+92	224L	L POLE	BURNSVILLE			X	
713+13	285L	L POLE	BURNSVILLE			X	
713+14	313L	L POLE	BURNSVILLE			X	
713+65	171L	L POLE	BURNSVILLE		X		
713+82	63R	L POLE	BURNSVILLE		X		
714+51	148R	L POLE	BURNSVILLE			X	
716+57	188L	L POLE	BURNSVILLE			X	
717+52	309L	L POLE	BURNSVILLE			X	
719+80	289L	L POLE	BURNSVILLE			X	
722+05	230R	L POLE	BURNSVILLE			X	
722+13	355R	L POLE	BURNSVILLE			X	
722+38	139L	L POLE	BURNSVILLE			X	
723+33	232R	L POLE	BURNSVILLE			X	

① ALL RELOCATES TO DONE BY OTHERS.

POWER - BURNSVILLE

SHEET 10 OF 14

S.P. 179-020-031 S.P. 019-605-028

INPLACE UTILITY TABULATIONS

DRAWN BY: GLJ | CHECKED BY: HS | CERTIFIED BY _____ LICENSED PROFESSIONAL ENGINEER LIC. NO. 18520 DATE 6/18/12

STATE PROJ. NO. 1901-148 (T.H. 13) SHEET NO. 56 OF 442 SHEETS

DISTRICT #: METRO
IPLOT NAME: d1901148_UTI1_tb
FILENAME: Projects/DM_ROS/013/1901/148/Design/PlanSheets/Tabulations/d1901148_UTI1_tb.dgn
PLOTTED/REVISED: 14-JUN-2012 09:32

POWER (DAKOTA COUNTY)

STATION TO STATION	OFFSET (FT)	DESCRIPTION	OWNER	REMARKS ②			OTHER UTILITIES
				ADJUST	RELOCATE	LEAVE AS IS	
NBCSAH5							
102+17 - 105+10	15R - 21R	SIG WIRE	DAKOTA CO		X		
104+89	73L	TRAFFIC SIG LIGHT	DAKOTA CO		X		
104+89 - 105+07	296L - 73L	SIG WIRE	DAKOTA CO		X		
105+07 - 105+57	120L - 84L	SIG WIRE	DAKOTA CO		X		
105+07 - 105+83	27L - 39R	SIG WIRE	DAKOTA CO		X		
105+08 - 105+22	213R - 334R	SIG WIRE	DAKOTA CO		X		
105+10	27L	TRAFFIC SIG LIGHT	DAKOTA CO		X		
105+10 - 105+23	21R - 29R	SIG WIRE	DAKOTA CO		X		
105+15 - 105+32	68R - 343R	SIG WIRE	DAKOTA CO		X		
105+22 - 105+62	185R - 213R	SIG WIRE	DAKOTA CO		X		
105+32 - 105+72	68R - 72R	SIG WIRE	DAKOTA CO		X		
105+57 - 105+92	87L - 84L	SIG WIRE	DAKOTA CO		X		
105+62 - 105+99	27R - 185R	SIG WIRE	DAKOTA CO		X		
105+72 - 105+85	64R - 72R	SIG WIRE	DAKOTA CO		X		
105+83 - 105+85	39R - 64R	SIG WIRE	DAKOTA CO		X		
105+85 - 106+01	40R - 64R	SIG WIRE	DAKOTA CO		X		
105+92 - 105+98	89L - 87L	SIG WIRE	DAKOTA CO		X		
105+92 - 106+11	87L - 73L	SIG WIRE	DAKOTA CO		X		
105+98	89L	TRAFFIC SIG LIGHT	DAKOTA CO		X		
105+98	26R	TRAFFIC SIG LIGHT	DAKOTA CO		X		
106+01 - 106+23	25R - 40R	SIG WIRE	DAKOTA CO		X		
106+11 - 108+49	74L - 69L	SIG WIRE	DAKOTA CO		X		
106+23 - 106+26	73L - 25R	SIG WIRE	DAKOTA CO		X		
EB13							
690+60 - 690+64	358R - 396R	SIG WIRE	DAKOTA CO		X		

① SEE CITY OF BURNSVILLE WATER MAIN PLANS, SHEETS NO. U1 TO U28.

ALL WORK TO BE DONE BY PROJECT CONTRACTOR.

② FOR PLANS, DETAILS AND QUANTITIES, SEE SHEET NO. SS1 TO SS31.

ALL WORK TO BE DONE BY PROJECT CONTRACTOR.

WATER

STATION TO STATION	OFFSET (FT)	DESCRIPTION	OWNER	REMARKS ①			NOTES
				ADJUST	RELOCATE	LEAVE AS IS	
EB13							
660+00 - 675+94	109R - 111R	WATER	BURNSVILLE				
660+00 - 675+49	201L - 189L	10" WATER	BURNSVILLE				
660+39	233L	FIRE HYD	BURNSVILLE				
663+84	181L	FIRE HYD	BURNSVILLE				
665+77	494L	FIRE HYD	BURNSVILLE				
667+35	181L	FIRE HYD	BURNSVILLE				
667+71	118L	FIRE HYD	BURNSVILLE				
668+27	575L	FIRE HYD	BURNSVILLE				
670+28	352L	FIRE HYD	BURNSVILLE				
670+31	381L	FIRE HYD	BURNSVILLE				
670+84	203L	FIRE HYD	BURNSVILLE				
671+31 - 672+00	110R - 325R	WATER	BURNSVILLE				
671+84	323R	FIRE HYD	BURNSVILLE				
672+18	226R	FIRE HYD	BURNSVILLE				
672+36	107R	FIRE HYD	BURNSVILLE				
674+85	468L	FIRE HYD	BURNSVILLE				
674+89	123R	FIRE HYD	BURNSVILLE				
675+49 - 677+15	248L - 201L	10" WATER	BURNSVILLE				
675+59	214L	FIRE HYD	BURNSVILLE				
675+94 - 678+53	111R - 169R	WATER	BURNSVILLE				
677+15 - 678+68	279L - 248L	10" WATER	BURNSVILLE				
677+73	142R	FIRE HYD	BURNSVILLE				
678+53 - 679+22	137R - 169R	WATER	BURNSVILLE				
678+68 - 679+62	279L - 263L	10" WATER	BURNSVILLE				
679+22 - 682+32	132R - 137R	WATER	BURNSVILLE				
679+33 - 679+79	423L - 270L	8" WATER	BURNSVILLE				
679+62 - 680+18	263L - 141L	10" WATER	BURNSVILLE				
679+62 - 680+90	328L - 263L	12" WATER	BURNSVILLE				
679+67	266L	WATER VLV	BURNSVILLE				
679+78	273L	WATER VLV	BURNSVILLE				
680+18 - 689+58	141L - 133L	10" WATER	BURNSVILLE				
680+59	228L	FIRE HYD	BURNSVILLE				
680+59	228L	FIRE HYD	BURNSVILLE				
682+29	150R	FIRE HYD	BURNSVILLE				
682+32 - 682+84	132R - 142R	WATER	BURNSVILLE				
682+84 - 683+26	142R - 167R	WATER	BURNSVILLE				
683+26 - 683+47	167R - 190R	WATER	BURNSVILLE				
683+47 - 684+10	190R - 303R	WATER	BURNSVILLE				
686+37	119R	FIRE HYD	BURNSVILLE				
686+55	362R	FIRE HYD	BURNSVILLE				
686+58 - 689+14	248R - 401R	8" WATER	BURNSVILLE				
688+29	243R	FIRE HYD	BURNSVILLE				
688+54	290R	FIRE HYD	BURNSVILLE				
688+90	352R	FIRE HYD	BURNSVILLE				
689+14 - 690+06	185R - 248R	8" WATER	BURNSVILLE				
689+53	152L	FIRE HYD	BURNSVILLE				
689+54	152L	FIRE HYD	BURNSVILLE				
689+58 - 689+93	135L - 161R	10" WATER	BURNSVILLE				
689+58 - 701+69	137L - 132L	10" WATER	BURNSVILLE				
689+59	133L	WATER VLV	BURNSVILLE				
689+93 - 690+26	161R - 223R	14" WATER	BURNSVILLE				
690+10	138L	WATER VLV	BURNSVILLE				
690+26 - 690+58	223R - 397R	14" WATER	BURNSVILLE				
691+53 - 691+55	369R - 389R	6" WATER	BURNSVILLE				
691+53 - 692+77	343R - 369R	6" WATER	BURNSVILLE				

POWER - DAKOTA CO.
WATER - BURNSVILLE

SHEET 11 OF 14

S.P. 179-020-031 S.P. 019-605-028

INPLACE UTILITY TABULATIONS

STATE PROJ. NO. 1901-148 (T.H. 13) SHEET NO. 57 OF 442 SHEETS

DRAWN BY: GLJ | CHECKED BY: HS | CERTIFIED BY _____ LICENSED PROFESSIONAL ENGINEER LIC. NO. 18520 DATE 6/18/12

DISTRICT #: METRO
IPLOT NAME: d1901148_UH1_tb
FILENAME: Projects/DM_ROS/013/1901/148/Design/PlanSheets/Tabulations/d1901148_UH1_tb.dgn
PLOTTED/REVISED: 14-JUN-2012 09:33

WATER

STATION TO STATION	OFFSET (FT)	DESCRIPTION	OWNER	REMARKS ① ADJUST	RELOCATE	LEAVE AS IS	NOTES
692+52	158R	FIRE HYD	BURNSVILLE				
692+76 - 692+77	120R - 343R	6" WATER	BURNSVILLE				
692+76 - 699+82	101R - 120R	6" WATER	BURNSVILLE				
692+79 - 693+00	344L - 137L	12" WATER	BURNSVILLE				
693+41	168L	FIRE HYD	BURNSVILLE				
693+42 - 693+43	167L - 133L	12" WATER	BURNSVILLE				
693+42	168L	FIRE HYD	BURNSVILLE				
693+43	139L	WATER VLV	BURNSVILLE				
693+43 - 701+69	139L - 134L	16" WATER	BURNSVILLE				
694+36 - 694+73	365R - 366R	8" WATER	BURNSVILLE				
694+46 - 694+72	277R	8" WATER	BURNSVILLE				
694+47	277R	FIRE HYD	BURNSVILLE				
694+69 - 694+73	108R - 388R	8" WATER	BURNSVILLE				
695+88	331R	FIRE HYD	BURNSVILLE				
697+65	95R	FIRE HYD	BURNSVILLE				
697+79	143L	FIRE HYD	BURNSVILLE				
697+79	137L	WATER VLV	BURNSVILLE				
697+80	143L	FIRE HYD	BURNSVILLE				
697+95	133L	WATER VLV	BURNSVILLE				
699+59 - 700+02	261R - 269R	6" WATER	BURNSVILLE				
699+59 - 699+82	101R - 261R	6" WATER	BURNSVILLE				
699+76	93R	FIRE HYD	BURNSVILLE				
701+41	146L	FIRE HYD	BURNSVILLE				
701+42	147L	FIRE HYD	BURNSVILLE				
701+43	149L	WATER VLV	BURNSVILLE				
701+69 - 707+81	137L - 132L	16" WATER	BURNSVILLE				
701+69	138L	WATER VLV	BURNSVILLE				
705+25	146L	FIRE HYD	BURNSVILLE				
705+25	146L	FIRE HYD	BURNSVILLE				
705+25	138L	WATER VLV	BURNSVILLE				
706+27	260R	FIRE HYD	BURNSVILLE				
707+36	914L	FIRE HYD	BURNSVILLE				
707+81 - 708+95	217L - 133L	16" WATER	BURNSVILLE				
707+81	134L	WATER MH	BURNSVILLE				
708+56	188L	WATER VLV	BURNSVILLE				
708+59	189L	FIRE HYD	BURNSVILLE				
708+59	189L	FIRE HYD	BURNSVILLE				
708+86 - 709+05	210L - 194L	16" WATER	BURNSVILLE				
708+88	208L	WATER VLV	BURNSVILLE				
708+95 - 709+60	417L - 217L	16" WATER	BURNSVILLE				
709+05 - 711+21	219L - 186L	16" WATER	BURNSVILLE				
709+14	274L	WATER VLV	BURNSVILLE				
709+17	390L	FIRE HYD	BURNSVILLE				
709+17	390L	FIRE HYD	BURNSVILLE				
709+17	399L	WATER VLV	BURNSVILLE				
709+47	478L	WATER VLV	BURNSVILLE				
709+72	850L	FIRE HYD	BURNSVILLE				
710+12	471L	FIRE HYD	BURNSVILLE				
711+21	222L	FIRE HYD	BURNSVILLE				
711+21	221L	FIRE HYD	BURNSVILLE				
711+21	219L	WATER VLV	BURNSVILLE				
716+03	660L	FIRE HYD	BURNSVILLE				
721+64	464L	FIRE HYD	BURNSVILLE				
724+19	142R	FIRE HYD	BURNSVILLE				

WATER

STATION TO STATION	OFFSET (FT)	DESCRIPTION	OWNER	REMARKS ① ADJUST	RELOCATE	LEAVE AS IS	NOTES
NBCSAH5							
100+57	674L	FIRE HYD	BURNSVILLE				
101+30	238L	FIRE HYD	BURNSVILLE				
101+73 - 105+94	33R - 36R	14" WATER	BURNSVILLE				
102+88 - 111+09	734L - 600L	WATER	BURNSVILLE				
103+12	270R	FIRE HYD	BURNSVILLE				
104+91 - 105+89	1020L - 76L	12" WATER	BURNSVILLE				
105+14	797L	FIRE HYD	BURNSVILLE				
105+43 - 105+67	35R - 307R	8" WATER	BURNSVILLE				
105+43 - 106+00	307R - 376R	8" WATER	BURNSVILLE				
105+89 - 108+06	76L - 75L	12" WATER	BURNSVILLE				
106+00 - 108+06	376R - 391R	8" WATER	BURNSVILLE				
106+05	390R	FIRE HYD	BURNSVILLE				
106+16	107R	FIRE HYD	BURNSVILLE				
106+43	654L	FIRE HYD	BURNSVILLE				
107+87 - 108+40	32R - 34R	6" WATER	BURNSVILLE				
108+02 - 108+06	75L - 33R	6" WATER	BURNSVILLE				
108+06 - 108+49	76L - 75L	14" WATER	BURNSVILLE				
108+36 - 109+40	975L - 518L	8" WATER	BURNSVILLE				
108+51	1010L	FIRE HYD	BURNSVILLE				
108+85	886L	FIRE HYD	BURNSVILLE				
109+45	657L	FIRE HYD	BURNSVILLE				
110+74	769L	FIRE HYD	BURNSVILLE				
115+58 - 116+25	228R - 230R	WATER	BURNSVILLE				
116+25 - 117+09	106R - 228R	WATER	BURNSVILLE				
116+84	112R	FIRE HYD	BURNSVILLE				
116+88 - 117+05	281L - 280L	WATER	BURNSVILLE				
116+89 - 117+09	106R	WATER	BURNSVILLE				
116+93 - 117+06	137L - 119L	WATER	BURNSVILLE				
116+94	120L	FIRE HYD	BURNSVILLE				
116+95	396L	FIRE HYD	BURNSVILLE				
116+97	394L	WATER VLV	BURNSVILLE				
117+02	137L	WATER VLV	BURNSVILLE				
117+03 - 117+22	386L - 379L	12" WATER	BURNSVILLE				
117+04	278L	WATER VLV	BURNSVILLE				
117+05 - 117+45	207L	12" WATER	BURNSVILLE				
117+05 - 117+09	280L - 106R	12" WATE	BURNSVILLE				
117+05 - 117+17	366L - 280L	12" WATER	BURNSVILLE				
117+06 - 123+27	73L - 2R	12" WATER	BURNSVILLE				
117+07	83L	WATER VLV	BURNSVILLE				
117+07	106R	WATER VLV	BURNSVILLE				
117+09 - 117+46	124R - 125R	12" WATER	BURNSVILLE				
117+09	207L	WATER VLV	BURNSVILLE				
117+13	125R	WATER VLV	BURNSVILLE				
117+17 - 117+57	366L - 354L	12" WATER	BURNSVILLE				
117+17 - 117+22	379L - 366L	12" WATER	BURNSVILLE				
117+19	381L	WATER VLV	BURNSVILLE				
117+22 - 117+78	512L - 379L	12" WATER	BURNSVILLE				
117+22	364L	WATER VLV	BURNSVILLE				
117+39	127R	FIRE HYD	BURNSVILLE				
117+48	73L	WATER VLV	BURNSVILLE				
117+57	356L	WATER VLV	BURNSVILLE				
117+62 - 117+78	523L - 512L	12" WATER	BURNSVILLE				
117+76	721L	FIRE HYD	BURNSVILLE				
117+76	516L	WATER VLV	BURNSVILLE				

① SEE CITY OF BURNSVILLE WATER MAIN PLANS, SHEETS NO. U1 TO U28.

ALL WORK TO BE DONE BY PROJECT CONTRACTOR.

WATER - BURNSVILLE

SHEET 12 OF 14

S.P. 179-020-031 S.P. 019-605-028

INPLACE UTILITY TABULATIONS

DRAWN BY: GLJ | CHECKED BY: HS | CERTIFIED BY _____ LICENSED PROFESSIONAL ENGINEER LIC. NO. 18520 DATE 6/18/12

STATE PROJ. NO. 1901-148 (T.H. 13) SHEET NO. 58 OF 442 SHEETS

DISTRICT #: METRO
IPLOT NAME: d1901148_UtilTb6
FILENAME: Projects/DM_ROS/013/1901/148/Design/PlanSheets/Tabulations/d1901148_UtilTb.dgn
PLOTTED/REVISED: 12-JUN-2012 13:32

WATER

STATION TO STATION	OFFSET (FT)	DESCRIPTION	OWNER	REMARKS ① ADJUST	RELOCATE	LEAVE AS IS	NOTES
117+78 - 118+11	512L - 493L	12" WATER	BURNSVILLE				
117+78 - 118+12	576L - 512L	12" WATER	BURNSVILLE				
117+79	720L	WATER VLV	BURNSVILLE				
117+80	510L	WATER VLV	BURNSVILLE				
117+97 - 118+11	828L - 825L	12" WATER	BURNSVILLE				
117+98	821L	FIRE HYD	BURNSVILLE				
118+06 - 118+34	852L - 712L	12" WATER	BURNSVILLE				
118+07	494L	WATER VLV	BURNSVILLE				
118+08	828L	WATER VLV	BURNSVILLE				
118+10 - 118+34	712L - 710L	12" WATER	BURNSVILLE				
118+12 - 118+34	667L - 576L	12" WATER	BURNSVILLE				
118+18	237L	FIRE HYD	BURNSVILLE				
118+20	509L	FIRE HYD	BURNSVILLE				
118+21	510L	FIRE HYD	BURNSVILLE				
118+22 - 118+60	775L - 770L	12" WATER	BURNSVILLE				
118+27	770L	WATER VLV	BURNSVILLE				
118+28 - 118+70	640L - 629L	12" WATER	BURNSVILLE				
118+30	712L	WATER VLV	BURNSVILLE				
118+32	640L	WATER VLV	BURNSVILLE				
118+34	712L - 667L	12" WATER	BURNSVILLE				
119+32	70L - 62L	12" WATER	BURNSVILLE				
119+32	62L	FIRE HYD	BURNSVILLE				
119+32	70L	WATER VLV	BURNSVILLE				
119+32	65L	WATER VLV	BURNSVILLE				
119+44 - 123+53	982L - 970L	8" WATER	BURNSVILLE				
120+04 - 120+10	58L - 52R	12" WATER	BURNSVILLE				
120+10	58L	WATER VLV	BURNSVILLE				
120+70	590R	FIRE HYD	BURNSVILLE				
122+23 - 122+24	18L - 16L	12" WATER	BURNSVILLE				
122+23	16L	FIRE HYD	BURNSVILLE				
122+24	18L	WATER VLV	BURNSVILLE				
123+12 - 123+29	433R - 443R	12" WATER	BURNSVILLE				
123+12 - 123+31	331R - 753R	12" WATER	BURNSVILLE				
123+12	743R	WATER VLV	BURNSVILLE				
123+12	433R	WATER VLV	BURNSVILLE				
123+17	753R	FIRE HYD	BURNSVILLE				
123+17	443R	FIRE HYD	BURNSVILLE				
123+17	753R	FIRE HYD	BURNSVILLE				
123+17	1067R	FIRE HYD	BURNSVILLE				
123+17	750R	WATER VLV	BURNSVILLE				
123+17	441R	WATER VLV	BURNSVILLE				
123+27 - 124+77	2R - 64R	12" WATER	BURNSVILLE				
123+29	433R	WATER VLV	BURNSVILLE				
123+30	743R	WATER VLV	BURNSVILLE				
123+31 - 124+05	36R - 331R	12" WATER	BURNSVILLE				
123+53 - 125+05	982L - 894L	8" WATER	BURNSVILLE				
123+62 - 123+78	128R - 130R	12" WATER	BURNSVILLE				
123+62	128R	FIRE HYD	BURNSVILLE				
123+65	129R	WATER VLV	BURNSVILLE				
123+78	130R	WATER VLV	BURNSVILLE				
124+12	1038L	FIRE HYD	BURNSVILLE				
124+14	1278L	FIRE HYD	BURNSVILLE				
124+33	998L	FIRE HYD	BURNSVILLE				
124+77 - 124+87	44R - 64R	12" WATER	BURNSVILLE				
124+85 - 125+19	41L - 44R	12" WATER	BURNSVILLE				

WATER

STATION TO STATION	OFFSET (FT)	DESCRIPTION	OWNER	REMARKS ① ADJUST	RELOCATE	LEAVE AS IS	NOTES
124+87	44R	WATER VLV	BURNSVILLE				
125+05 - 128+32	915L - 894L	8" WATER	BURNSVILLE				
125+19 - 130+69	88L - 31L	12" WATER	BURNSVILLE				
126+36 - 126+38	71L - 32L	12" WATER	BURNSVILLE				
126+38	71L	FIRE HYD	BURNSVILLE				
126+38	60L	WATER VLV	BURNSVILLE				
126+61	129L	FIRE HYD	BURNSVILLE				
127+02	850L	FIRE HYD	BURNSVILLE				
127+34 - 127+37	110L - 28L	12" WATER	BURNSVILLE				
127+35	55L	WATER VLV	BURNSVILLE				
128+29	122L	FIRE HYD	BURNSVILLE				
130+18	187L	FIRE HYD	BURNSVILLE				
130+47 - 130+48	65L - 31L	12" WATER	BURNSVILLE				
130+47	65L	FIRE HYD	BURNSVILLE				
130+48	56L	WATER VLV	BURNSVILLE				

SANITARY SEWER

STATION TO STATION	LOCATION	ITEM INPLACE	ELEVATION FLOW LINE	TOP OF CASTING	REMARKS ① RELOCATE	ADJUST	LEAVE AS IS	OWNERSHIP
NBCSAH5								
117+42 TO 117+92	517' LT TO 410' LT	SAN. SEWER						BURNSVILLE
117+92	517' LT	MANHOLE	735.5	746.7				BURNSVILLE
117+92 TO 118+23	568' LT TO 517' LT	SAN. SEWER						BURNSVILLE
118+23 TO 118+43	626' LT TO 568' LT	SAN. SEWER						BURNSVILLE
118+29 TO 118+52	856' LT TO 729' LT	SAN. SEWER						BURNSVILLE
118+43 TO 118+52	729' LT TO 626' LT	SAN. SEWER						BURNSVILLE
118+52	729' LT	MANHOLE	731.6	743.0				BURNSVILLE
119+49 TO 120+54	976' LT TO 949' LT	SAN. SEWER	736.8					BURNSVILLE
120+54	949' LT	MANHOLE	728.8	736.7				BURNSVILLE
120+54 TO 122+67	949' LT TO 692' LT	SAN. SEWER						BURNSVILLE
120+82	49' RT	MANHOLE	738.0	748.3				BURNSVILLE
120+82 TO 122+37	49' RT TO 74' RT	SAN. SEWER						BURNSVILLE
122+37	74' RT	MANHOLE	730.0	743.0				BURNSVILLE
122+37 TO 122+46	22' LT TO 74' RT	SAN. SEWER						BURNSVILLE
122+37 TO 124+61	74' RT TO 136' RT	SAN. SEWER						BURNSVILLE
122+67	692' LT	MANHOLE	728.7	736.0				BURNSVILLE
122+67 TO 124+61	692' LT TO 136' RT	SAN. SEWER						BURNSVILLE
124+61	136' RT	MANHOLE	727.0	739.8				BURNSVILLE
124+61 TO 127+80	136' RT TO 268' RT	SAN. SEWER						BURNSVILLE
127+80	268' RT	MANHOLE	726.7	735.7				BURNSVILLE
126CON								
16+84	188' LT	MANHOLE	728.21	736.31				MCES
16+84 TO 24+06	188' LT TO 39' LT	27" SAN. SEWER						MCES
20+63	39' LT	MANHOLE	727.4					MCES
20+63 TO 24+06	39' LT TO 119' LT	27" SAN. SEWER						MCES
24+06	119' LT	MANHOLE	726.85	739.95				MCES

① SEE CITY OF BURNSVILLE WATER MAIN PLANS, SHEETS NO. U1 TO U28.

ALL WORK TO BE DONE BY PROJECT CONTRACTOR.

WATER - BURNSVILLE
SAN SEWER - BURNSVILLE

SHEET 13 OF 14

S.P. 179-020-031 S.P. 019-605-028

INPLACE UTILITY TABULATIONS

DRAWN BY: GLJ | CHECKED BY: HS | CERTIFIED BY _____ LICENSED PROFESSIONAL ENGINEER LIC. NO. 18520 DATE 6/18/12

STATE PROJ. NO. 1901-148 (T.H. 13) SHEET NO. 59 OF 442 SHEETS

PLOTTED/REVISED: 12-JUN-2012 13:32
DISTRICT #: METRO
IPLOT NAME: d1901148_UH1_tb5
FILENAME: Projects/DM_ROS/013/1901/148/Design/PlanSheets/Tabulations/d1901148_UH1_tb.dgn

SANITARY SEWER

STATION TO STATION	LOCATION	ITEM INPLACE	ELEVATION		REMARKS ①			OWNERSHIP
			FLOW LINE	TOP OF CASTING	RELOCATE	ADJUST	LEAVE AS IS	
EB13								
660+00 TO 674+72	179' LT TO 178' LT	8 " SAN. SEWER						BURNSVILLE
660+00 TO 674+46	99' RT TO 105' RT	8 " SAN. SEWER						BURNSVILLE
662+34	102' RT	MANHOLE	722.4	733.0				BURNSVILLE
662+68	179' LT	MANHOLE	721.4	729.7				BURNSVILLE
664+63	103' RT	MANHOLE	723.3	732.5				BURNSVILLE
666+33	99' RT	MANHOLE	723.9	731.3				BURNSVILLE
666+70	178' LT	MANHOLE	723.0	737.4				BURNSVILLE
670+07	179' LT	MANHOLE		734.1				BURNSVILLE
670+47	104' RT	MANHOLE	725.6	736.3				BURNSVILLE
670+72	178' LT	MANHOLE	724.6	735.2				BURNSVILLE
671+40	104' RT	MANHOLE	726.0	737.4				BURNSVILLE
671+40 TO 672+32	104' RT TO 392' RT	8 " SAN. SEWER						BURNSVILLE
672+32	392' RT	MANHOLE	727.2	739.3				BURNSVILLE
674+46	105' RT	MANHOLE	727.1	738.4				BURNSVILLE
674+72	178' LT	MANHOLE	726.2	737.6				BURNSVILLE
678+24	284' RT	MANHOLE	730.8	742.7				BURNSVILLE
678+24 TO 679+68	128' RT TO 284' RT	27" SAN. SEWER						MCES
679+24 TO 679+46	535' LT TO 104' LT	27" SAN. SEWER						MCES
679+36	359' LT	MANHOLE	731.9	740.0				BURNSVILLE
679+36 TO 679+58	359' LT TO 285' LT	8 " SAN. SEWER						BURNSVILLE
679+37	275' LT	MANHOLE	729.0	741.4				MGEC
679+37 TO 680+79	348' LT TO 275' LT	27" SAN. SEWER						BURNSVILLE
679+46	104' LT	MANHOLE	729.0	741.5				MCES
679+46 TO 679+68	104' LT TO 128' RT	27" SAN. SEWER						BURNSVILLE
679+58	285' LT	MANHOLE	730.6	741.5				BURNSVILLE
679+67	47' RT	MANHOLE	730.6	751.3				MCES
679+68	128' RT	MANHOLE	730.7	753.1				BURNSVILLE
679+68 TO 682+19	124' RT TO 128' RT	10" SAN. SEWER						BURNSVILLE
682+19	124' RT	MANHOLE	760.0	769.8				BURNSVILLE
682+19 TO 683+61	124' RT TO 203' RT	10" SAN. SEWER						BURNSVILLE
683+61	203' RT	MANHOLE	769.0	781.0				BURNSVILLE
683+61 TO 684+18	203' RT TO 301' RT	10" SAN. SEWER						BURNSVILLE
686+52 TO 688+58	267' RT TO 391' RT	8" SAN. SEWER						BURNSVILLE
686+77	375' RT	MANHOLE	777.9	792.6				BURNSVILLE
688+58	267' RT	MANHOLE	779.0	787.0				BURNSVILLE
690+45 TO 690+54	362' LT TO 308' LT	8" SAN. SEWER						BURNSVILLE
690+54	308' LT	MANHOLE	763.2	773.3				BURNSVILLE
691+64	335' RT	MANHOLE	775.9	787.9				BURNSVILLE
691+64 TO 691+73	335' RT TO 388' RT	10" SAN. SEWER						BURNSVILLE
691+64 TO 692+87	278' RT TO 335' RT	10" SAN. SEWER						BURNSVILLE
692+85	128' RT	MANHOLE	775.0	786.5				BURNSVILLE
692+85 TO 692+87	128' RT TO 278' RT	10" SAN. SEWER						BURNSVILLE
692+85 TO 697+65	113' RT TO 128' RT	10" SAN. SEWER						BURNSVILLE
692+87	278' RT	MANHOLE	775.5	787.0				BURNSVILLE
695+59	113' RT	MANHOLE	774.4	786.0				BURNSVILLE
697+65	115' RT	MANHOLE	773.7	788.0				BURNSVILLE
697+65 TO 697+92	94' RT TO 115' RT	12" SAN. SEWER						BURNSVILLE
697+77	274' RT	MANHOLE	786.3	795.4				BURNSVILLE
697+77 TO 697+92	94' RT TO 274' RT	12" SAN. SEWER						BURNSVILLE
697+86	284' RT	MANHOLE	785.4	795.6				BURNSVILLE
697+86 TO 698+01	116' RT - 284' RT	12" SAN. SEWER						BURNSVILLE
697+92	94' RT	MANHOLE	770.9	788.6				BURNSVILLE
697+92	113' RT	MANHOLE		789.6				BURNSVILLE
697+92 TO 698+01	94' RT TO 116' RT	12" SAN. SEWER						BURNSVILLE
697+92 TO 698+19	151' LT TO 94' RT	12" SAN. SEWER						BURNSVILLE

① SEE CITY OF BURNSVILLE WATER MAIN PLANS, SHEETS NO. U1 TO U28.

ALL WORK TO BE DONE BY PROJECT CONTRACTOR.

SANITARY SEWER

STATION TO STATION	LOCATION	ITEM INPLACE	ELEVATION		REMARKS ①			OWNERSHIP
			FLOW LINE	TOP OF CASTING	RELOCATE	ADJUST	LEAVE AS IS	
EB13								
698+01	116' RT	MANHOLE	780.5	789.4				BURNSVILLE
698+19	151' LT	MANHOLE	769.5	785.7				BURNSVILLE
698+19 TO 699+98	538' LT TO 151' LT	12" SAN. SEWER						BURNSVILLE
698+19 TO 699+29	151' LT TO 135' LT	8" SAN. SEWER						BURNSVILLE
699+29	135' LT	MANHOLE	777.9	786.4				BURNSVILLE
699+29 TO 704+53	148' LT TO 135' LT	8" SAN. SEWER						BURNSVILLE
699+98	538' LT	MANHOLE	763.8	774.3				BURNSVILLE
702+04	143' LT	MANHOLE	780.1	788.7				BURNSVILLE
704+53	148' LT	MANHOLE	784.5	792.6				BURNSVILLE
708+97	115' LT	MANHOLE	783.0	798.5				BURNSVILLE
708+97 TO 709+11	112' LT TO 105' RT	9" SAN. SEWER						BURNSVILLE
708+97 TO 709+16	242' LT TO 115' LT	9" SAN. SEWER						BURNSVILLE
709+11	105' RT	MANHOLE	787.0	794.3				BURNSVILLE
709+11 TO 719+75	105' RT TO 112' RT	9" SAN. SEWER						BURNSVILLE
709+16	242' LT	MANHOLE	775.0	792.9				BURNSVILLE
709+16 TO 709+61	389' LT TO 242' LT	8" SAN. SEWER						BURNSVILLE
709+16 TO 709+59	242' LT TO 203' LT	8" SAN. SEWER						BURNSVILLE
709+59	203' LT	MANHOLE	785.8	794.9				BURNSVILLE
709+59 TO 711+45	203' LT TO 197' LT	9" SAN. SEWER						BURNSVILLE
709+61	389' LT	MANHOLE	771.5	781.5				BURNSVILLE
711+45	197' LT	MANHOLE	790.2	799.2				BURNSVILLE
712+87	105' RT	MANHOLE	796.3	803.6				BURNSVILLE
716+71	112' RT	MANHOLE	805.7	813.0				BURNSVILLE
719+75	110' RT	MANHOLE	810.9	819.8				BURNSVILLE
NBCSAH5								
101+30	38' RT	MANHOLE	789.0	797.0				BURNSVILLE
101+30 TO 105+69	38' RT TO 52' RT	SAN. SEWER						BURNSVILLE
102+74	590' LT	MANHOLE	777.1	789.8				BURNSVILLE
102+74 TO 111+08	72' 6LT TO 590' LT	SAN. SEWER						BURNSVILLE
103+68	595' LT	MANHOLE	776.8	789.5				BURNSVILLE
104+08	49' RT	MANHOLE	778.5	790.3				BURNSVILLE
104+58	815' LT	MANHOLE	775.9	789.0				BURNSVILLE
104+58 TO 104+70	815' LT TO 603' LT	SAN. SEWER						BURNSVILLE
104+70	603' LT	MANHOLE	445.8	786.8				BURNSVILLE
104+70 TO 105+10	603' LT TO 191' LT	SAN. SEWER						BURNSVILLE
104+91	370' LT	MANHOLE	773.7	787.1				BURNSVILLE
105+10	191' LT	MANHOLE	778.0	788.2				BURNSVILLE
105+14	51' RT	MANHOLE		789.6				BURNSVILLE
105+40	388' RT	MANHOLE	782.6	784.0				BURNSVILLE
105+40 TO 105+69	52' RT TO 388' RT	SAN. SEWER						BURNSVILLE
105+69	52' RT	MANHOLE	777.8	789.0				BURNSVILLE
105+69 TO 108+38	52' RT TO 53' RT	SAN. SEWER						BURNSVILLE
107+19	636' LT	MANHOLE	771.5	792.5				BURNSVILLE
108+67	874' LT	MANHOLE	789.3	799.8				BURNSVILLE
108+67 TO 109+10	874' LT TO 681' LT	SAN. SEWER						BURNSVILLE
109+10	681' LT	MANHOLE	770.2	796.3				BURNSVILLE
109+10 TO 109+51	681' LT TO 522' LT	SAN. SEWER						BURNSVILLE
116+00 TO 117+19	26' RT	SAN. SEWER						BURNSVILLE
117+10	203' RT	MANHOLE	758.0	771.0				BURNSVILLE
117+10 TO 117+19	105' RT TO 203' RT	SAN. SEWER						BURNSVILLE
117+15	249' LT	MANHOLE	749.6	759.8				BURNSVILLE
117+15 TO 117+22	336' LT TO 249' LT	SAN. SEWER						BURNSVILLE
117+15 TO 117+19	249' LT TO 105' RT	SAN. SEWER						BURNSVILLE
117+19	26' RT	MANHOLE	751.5	764.3				BURNSVILLE
117+22 TO 117+42	410' LT TO 336' LT	SAN. SEWER						BURNSVILLE

SAN SEWER - BURNSVILLE **SHEET 14 OF 14**

S.P. 179-020-031 S.P. 019-605-028

INPLACE UTILITY TABULATIONS

DRAWN BY: GLJ | CHECKED BY: HS | CERTIFIED BY Brady J. Shoos LICENSED PROFESSIONAL ENGINEER LIC. NO. 18520 DATE 6/18/12

STATE PROJ. NO. 1901-148 (T.H. 13) SHEET NO. 60 OF 442 SHEETS

DISTRICT #: METRO
IPLOT NAME: d1901148_UHI_Tb4
FILENAME: Projects/DM_ROS/013/1901/148/Design/PlanSheets/Tabulations/d1901148_UHI_tb.dgn
PLOTTED/REVISED: 12-JUN-2012 13:32

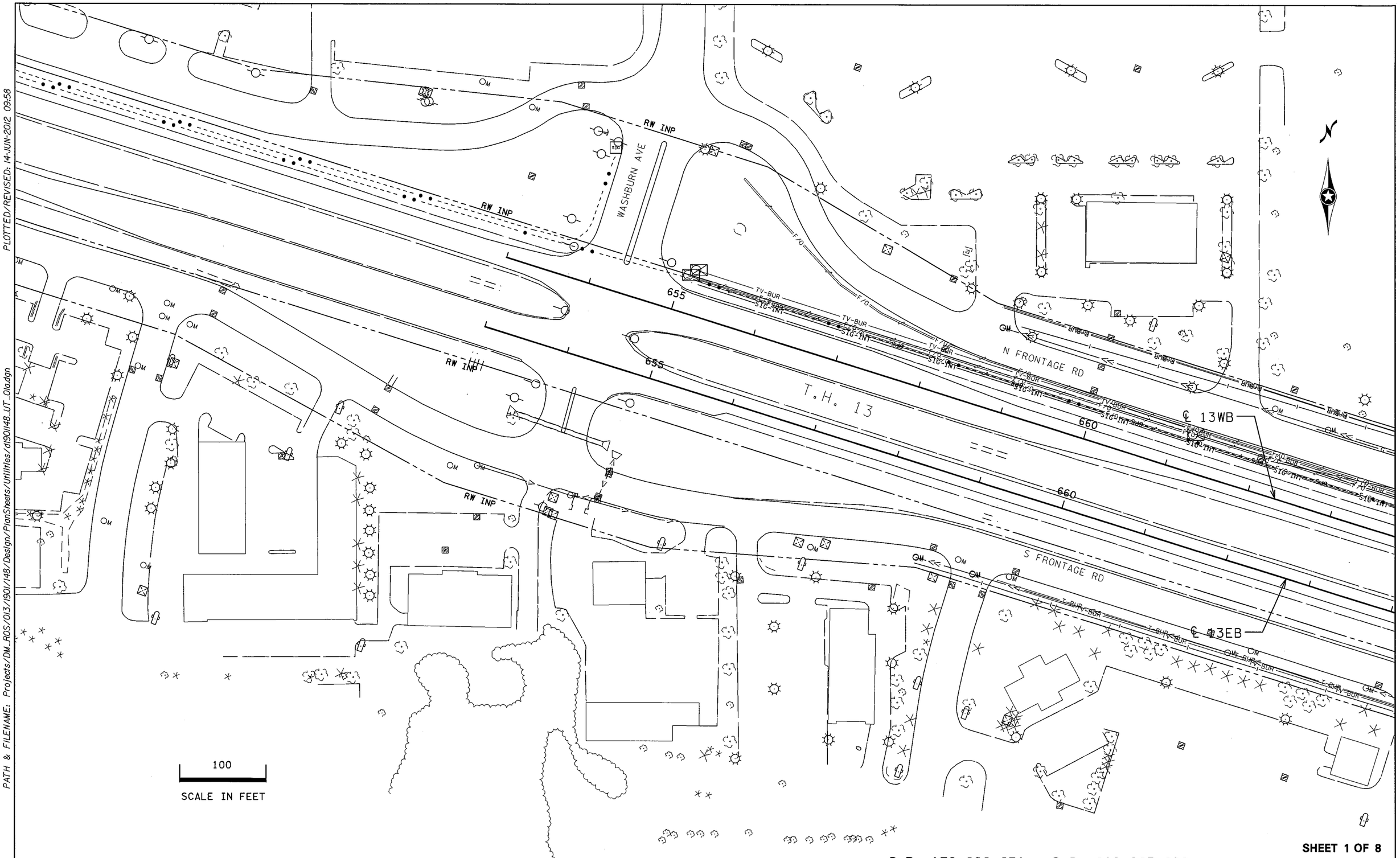

PLOTTED/REVISED: 14-JUN-2012 09:58

DISTRICT *: METRO
IPLOT NAME: d1901148_UT_Ola
PATH & FILENAME: Projects/DM_ROS/013/1901/148/Design/PlanSheets/Utilities/d1901148_UT_Ola.dgn

SHEET 1 OF 8

S.P. 179-020-031 S.P. 019-605-028

INPLACE UTILITY PLANS

DRAWN BY: GLJ	CHECKED BY: HS	CERTIFIED BY _____ LICENSED PROFESSIONAL ENGINEER	LIC. NO. 18520 DATE 6/18/12	STATE PROJ. NO. 1901-148 (T.H. 13) SHEET NO. 61 OF 442 SHEETS

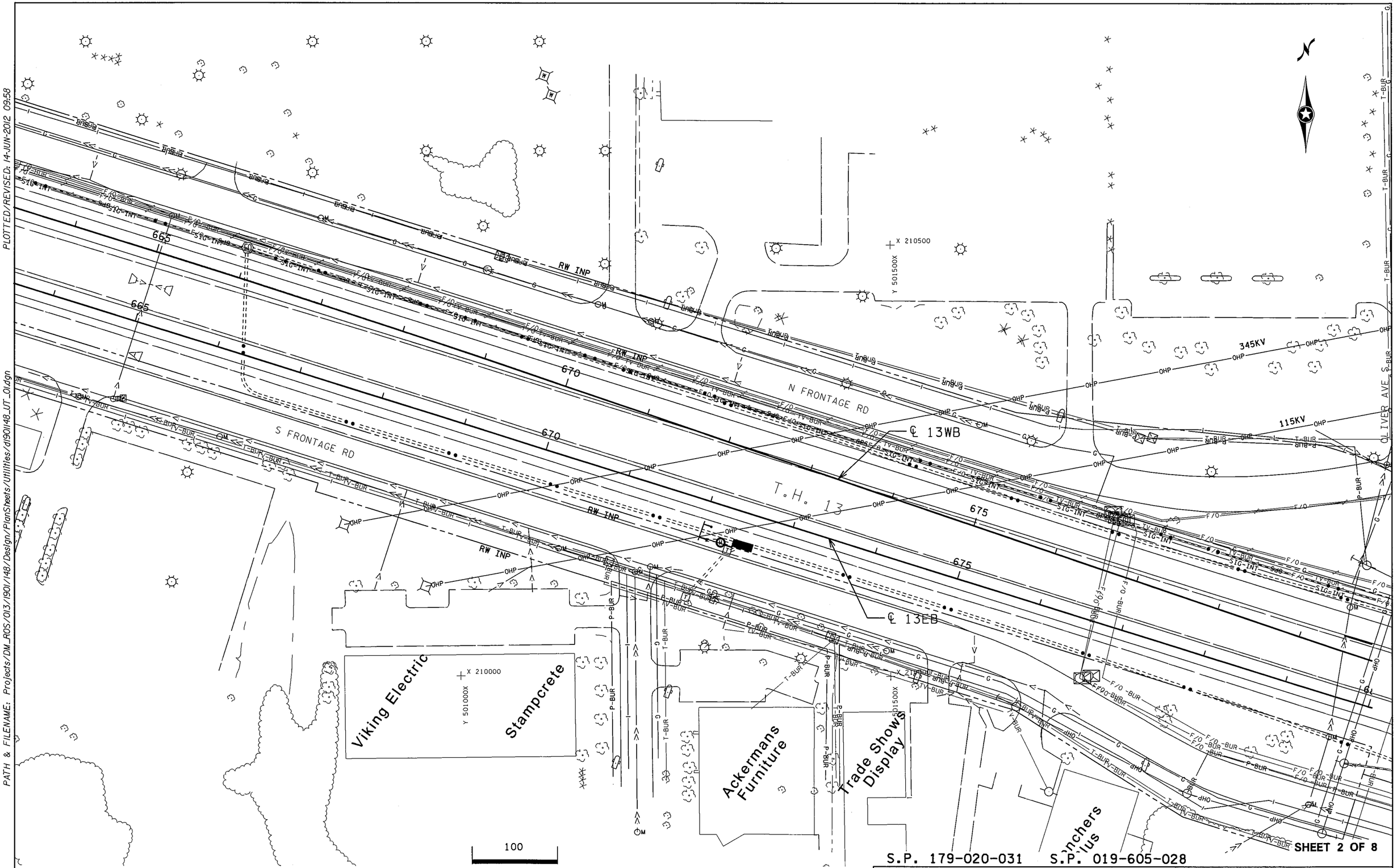

S.P. 179-020-031 S.P. 019-605-028

SHEET 2 OF 8

DISTRICT #: METRO
IPLOT NAME: d1901148_UT_01
PATH & FILENAME: Projects/DM_ROS/013/1901/148/Design/PlanSheets/Utilities/d1901148_UT_01.dgn

PLOTTED/REVISED: 14-JUN-2012 09:58

INPLACE UTILITY PLANS

DRAWN BY: GLJ	CHECKED BY: HS	CERTIFIED BY LICENSED PROFESSIONAL ENGINEER	LIC. NO. 18520 DATE 6/18/12	STATE PROJ. NO. 1901-148 (T.H. 13)	SHEET NO. 62 OF 442 SHEETS

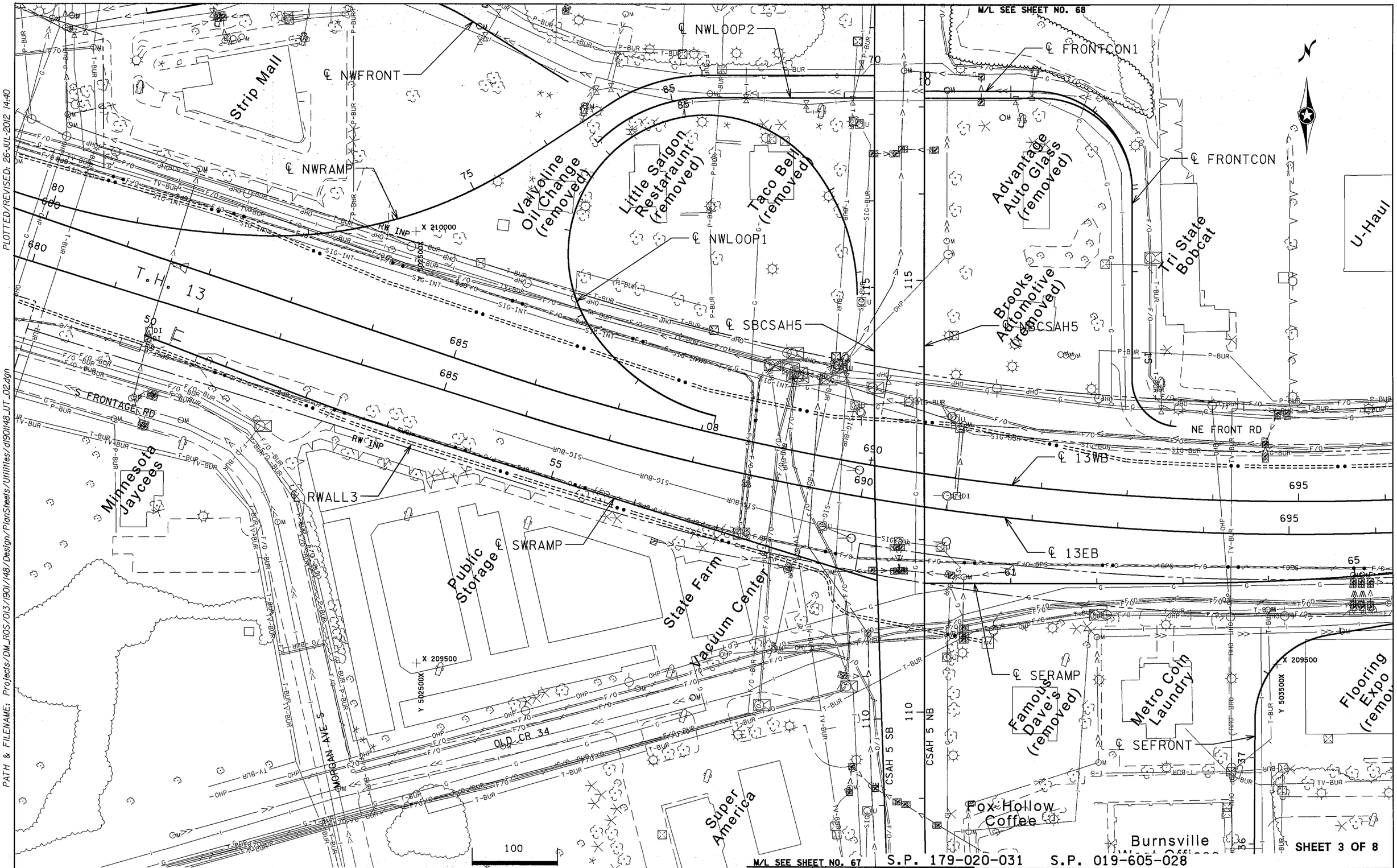

DISTRICT #: METRO
IPLOT NAME: d1901I48_UT_02
PATH & FILENAME: Projects/DM_ROS/013/1901/148/Design/PlanSheets/Utilities/d1901I48_UT_02.dgn

PLOTTED/REVISED: 26-JUL-2012 14:40

DRAWN BY: GLJ	CHECKED BY: HS	CERTIFIED BY _____ LICENSED PROFESSIONAL ENGINEER LIC. NO. 18520 DATE 7/26/12	INPLACE UTILITY PLANS
			STATE PROJ. NO. 1901-148 (T.H. 13) SHEET NO. 63 OF 442 SHEETS

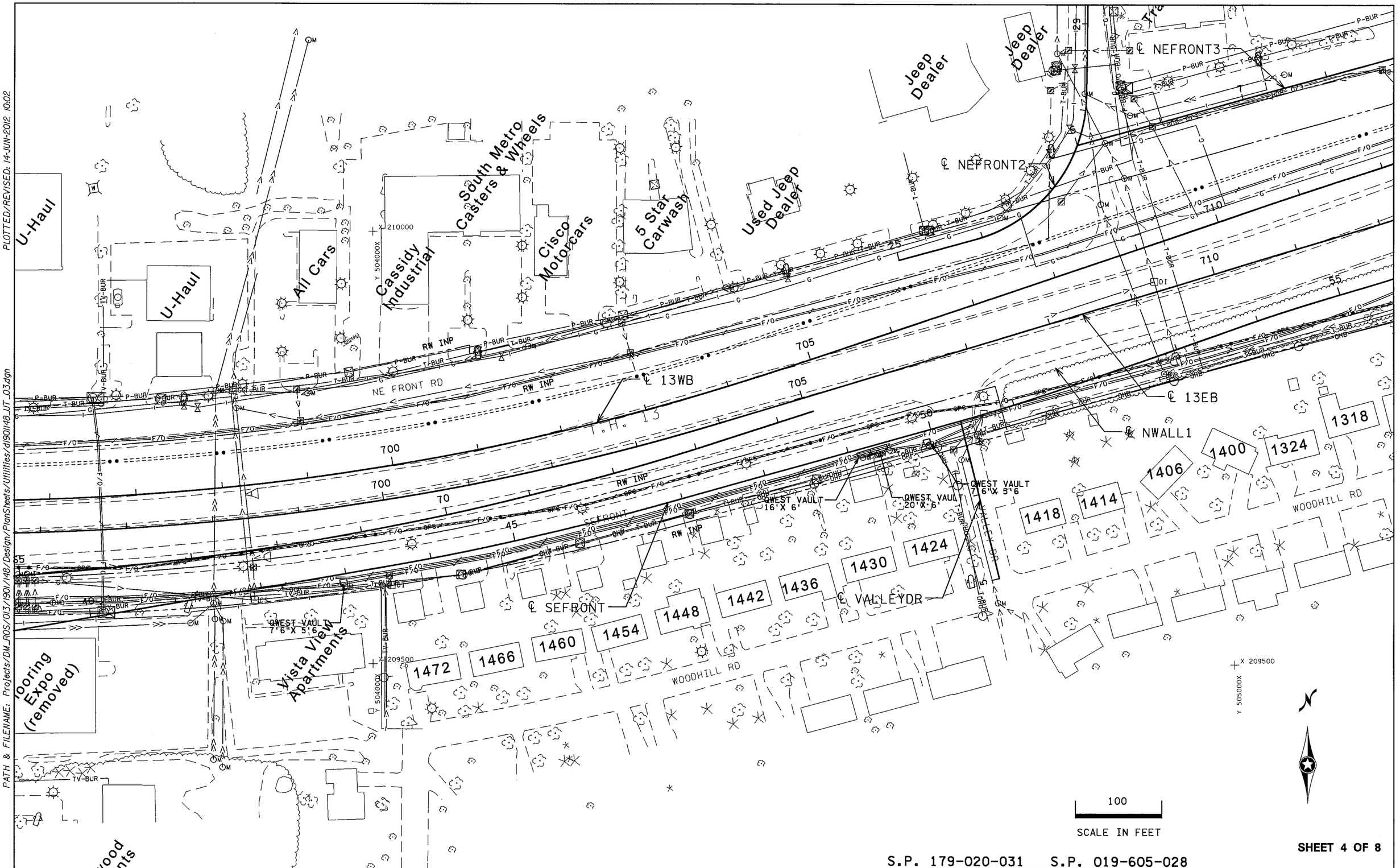

SHEET 4 OF 8

S.P. 179-020-031 S.P. 019-605-028

INPLACE UTILITY PLANS

DRAWN BY: GLJ	CHECKED BY: HS	CERTIFIED BY LICENSED PROFESSIONAL ENGINEER LIC. NO. 18520 DATE 6/18/12	STATE PROJ. NO. 1901-148 (T.H. 13)	SHEET NO. 64 OF 442 SHEETS

PLOTTED/REVISED: 14-JUN-2012 10:02

DISTRICT #: METRO
IPLOT NAME: d1901148_UT_03
PATH & FILENAME: Projects/DM_ROS/013/1901/148/Design/PlanSheets/Utilities/d1901148_UT_03.dgn

PLOTTED/REVISED: 14-JUN-2012 10:03

DISTRICT #: METRO
IPLOT NAME: d190ll48_UT_04
PATH & FILENAME: Projects/DM_ROS/013/190l/148/Design/PlanSheets/Utilities/d190ll48_UT_04.dgn

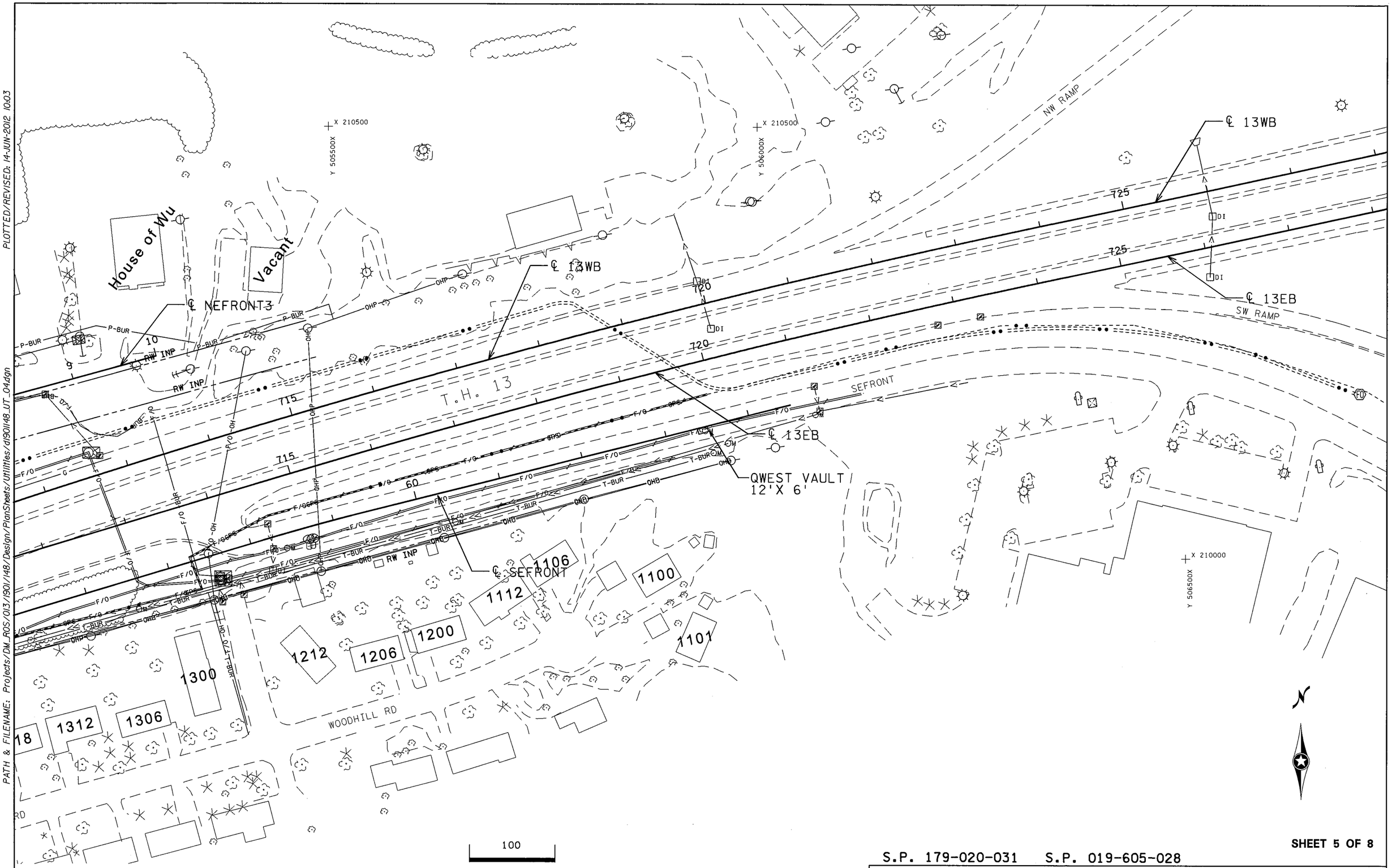

100

SCALE IN FEET

SHEET 5 OF 8

S.P. 179-020-031 S.P. 019-605-028

INPLACE UTILITY PLANS

DRAWN BY: GLJ	CHECKED BY: HS	CERTIFIED BY _____ LICENSED PROFESSIONAL ENGINEER	LIC. NO. 18520 DATE 6/18/12	STATE PROJ. NO. 1901-148 (T.H. 13)	SHEET NO. 65 OF 442 SHEETS

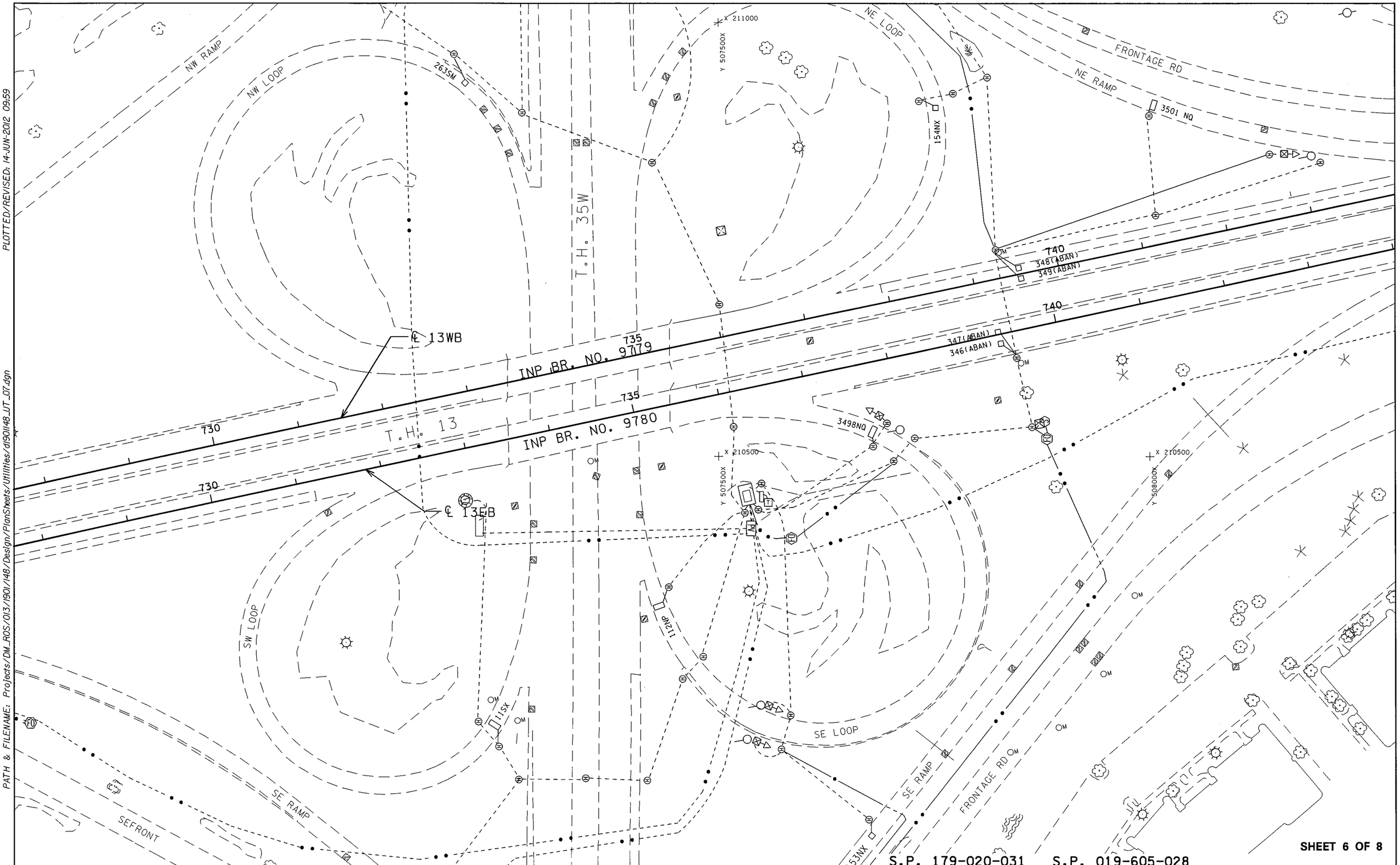

SHEET 6 OF 8

S.P. 179-020-031 S.P. 019-605-028

INPLACE UTILITY PLANS

DRAWN BY: GLJ	CHECKED BY: HS	CERTIFIED BY _____ LICENSED PROFESSIONAL ENGINEER LIC. NO. 18520 DATE 6/18/12	STATE PROJ. NO. 1901-148 (T.H. 13) SHEET NO. 66 OF 442 SHEETS

DISTRICT #: METRO
IPLOT NAME: d190l148_UT_07
PATH & FILENAME: Projects/DM_ROS/013/190l/148/Design/PlanSheets/Utilities/d190l148_UT_07.dgn
PLOTTED/REVISED: 14-JUN-2012 09:59

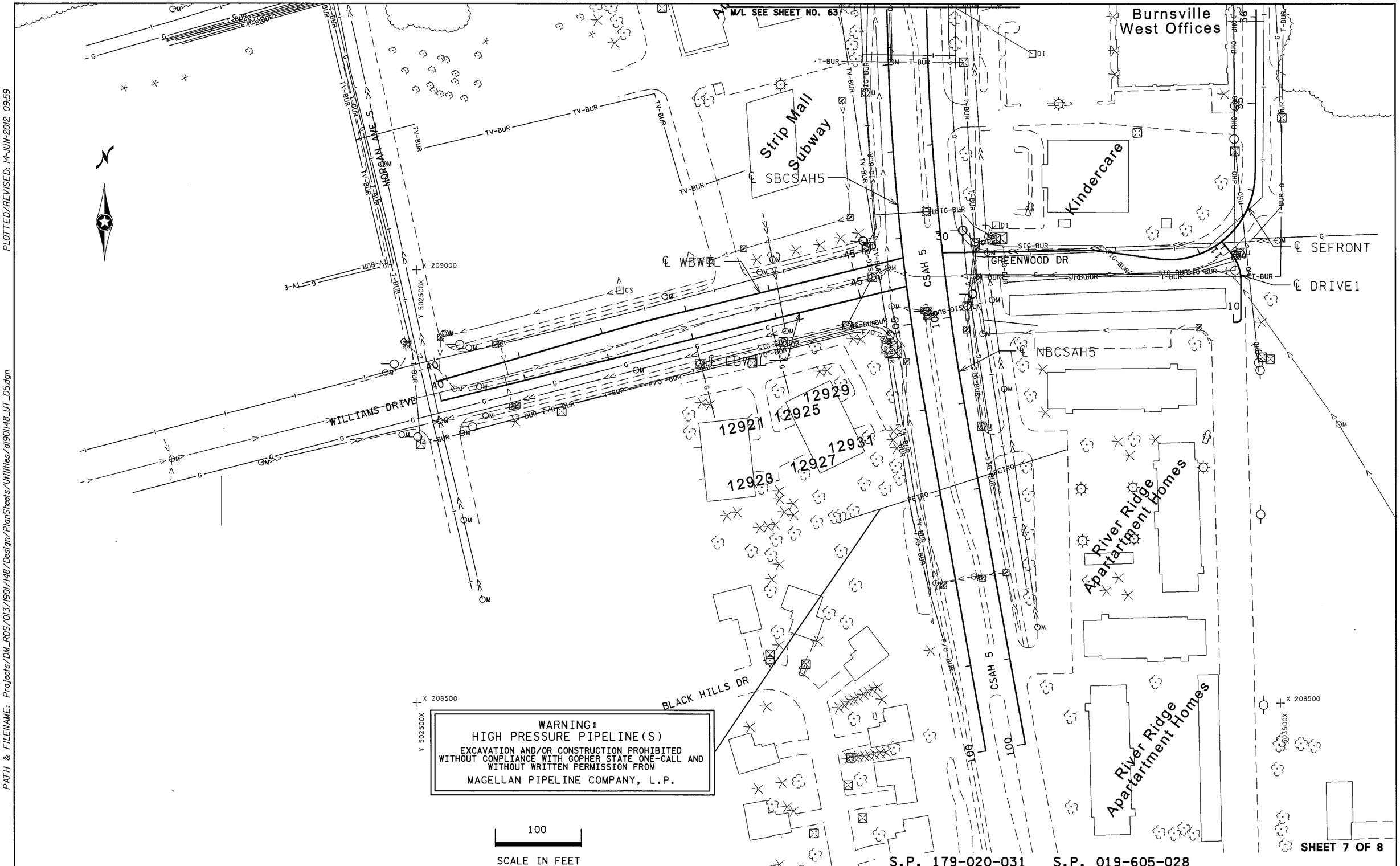

S.P. 179-020-031 S.P. 019-605-028

INPLACE UTILITY PLANS

DRAWN BY: GLJ	CHECKED BY: HS	CERTIFIED BY [signature] LICENSED PROFESSIONAL ENGINEER	LIC. NO. 18520 DATE 6/18/12	STATE PROJ. NO. 1901-148 (T.H. 13)	SHEET NO. 67 OF 442 SHEETS

PLOTTED/REVISED: 14-JUN-2012 09:59

DISTRICT #: METRO
IPLOT NAME: d1901148_UT_05
PATH & FILENAME: Projects/DM_ROS/013/1901/148/Design/PlanSheets/Utilities/d1901148_UT_05.dgn

PLOTTED/REVISED: 14-JUN-2012 09:59

DISTRICT #: METRO
IPLOT NAME: dl90ll48_UT_06
PATH & FILENAME: Projects/DM_ROS/013/1901/148/Design/PlanSheets/Utilities/dl90ll48_UT_06.dgn

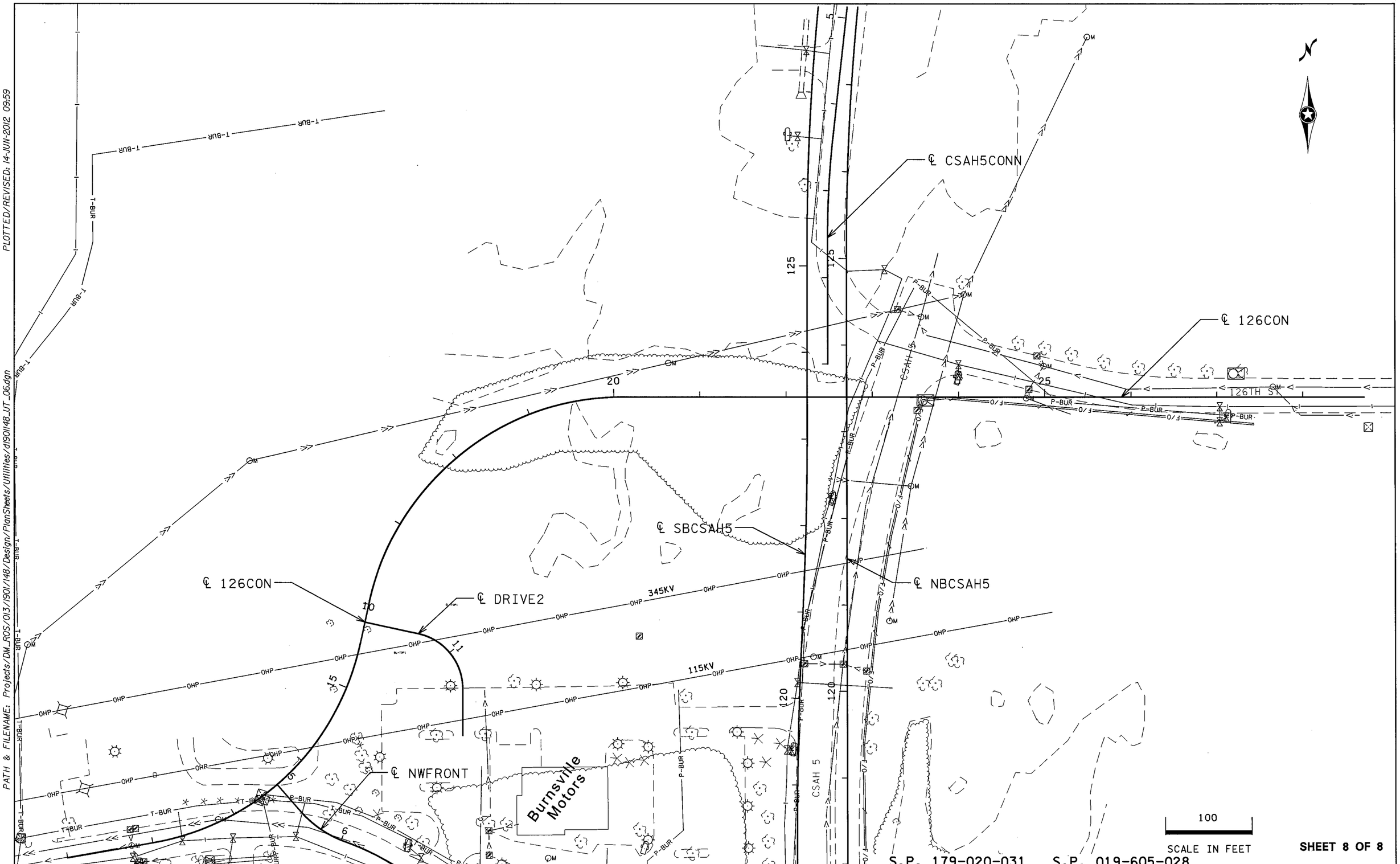

M/L SEE SHEET NO. 63

S.P. 179-020-031 S.P. 019-605-028

SHEET 8 OF 8

INPLACE UTILITY PLANS

DRAWN BY: GLJ	CHECKED BY: HS	CERTIFIED BY LICENSED PROFESSIONAL ENGINEER LIC. NO. 18520 DATE 6/18/12	STATE PROJ. NO. 1901-148 (T.H. 13)	SHEET NO. 68 OF 442 SHEETS

INSET A

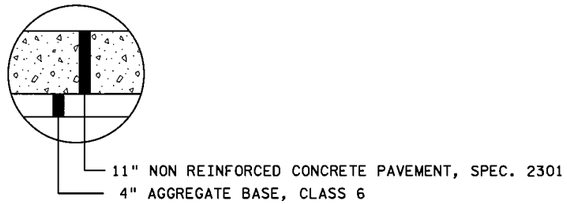

INSET C

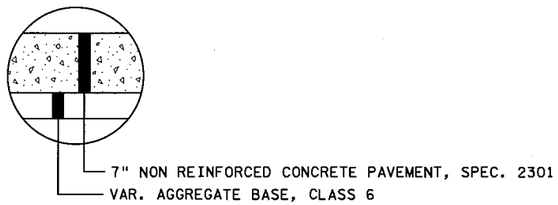

TH13EB STA. 670+00 TO 677+15

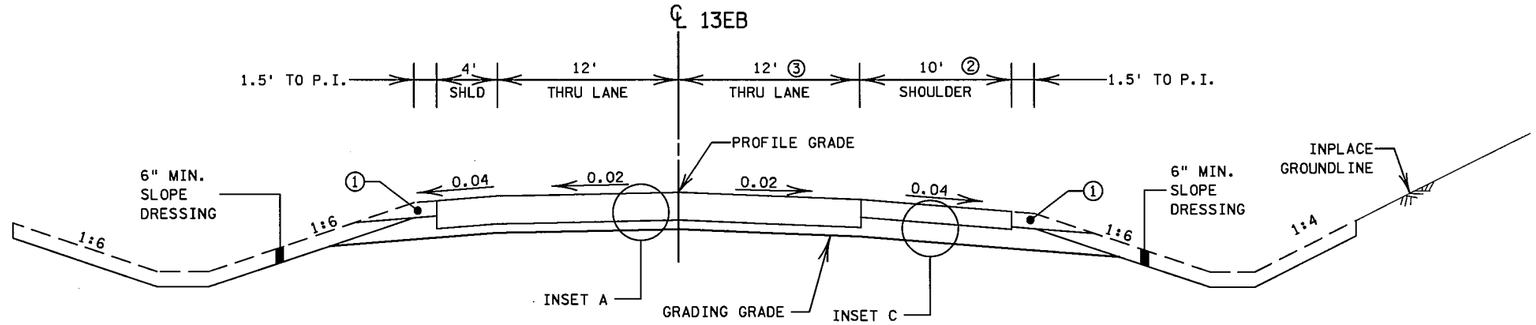

TH13EB STA. 677+15 TO 681+50

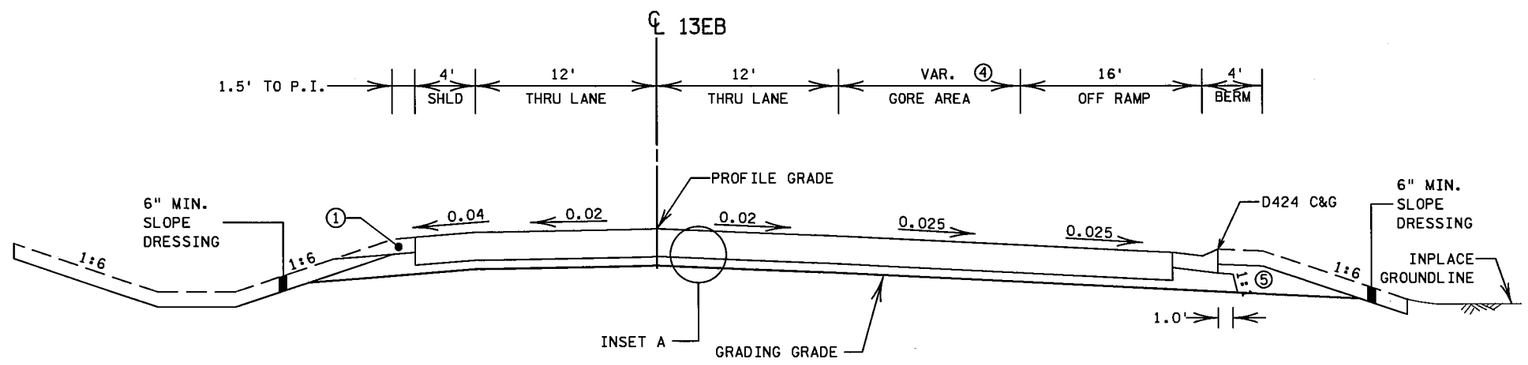

TH13EB STA. 681+50 TO 683+14

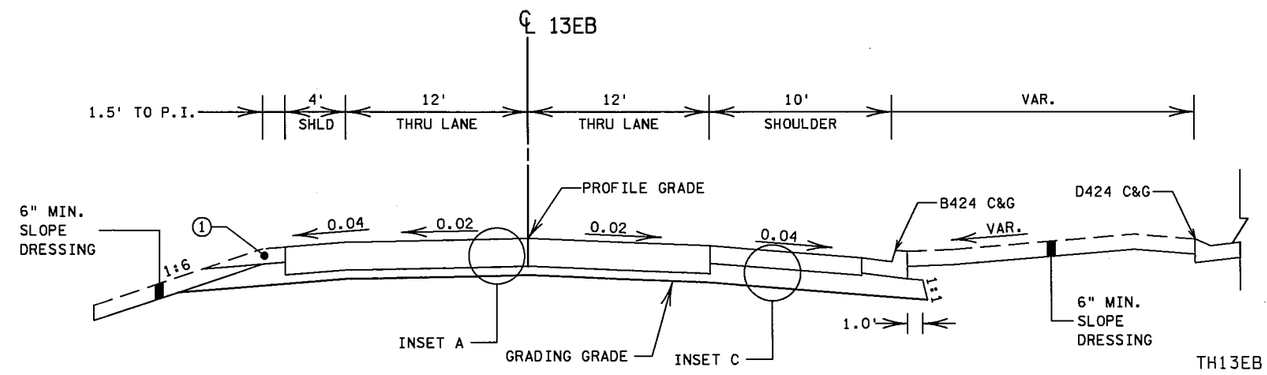

GENERAL TYPICAL SECTION NOTES:

- USE 3" LATERAL STEPPING ON BITUMINOUS LIFTS.
- ALL CROSS SLOPES ARE IN FOOT PER FOOT.
- FOR DITCH DETAILS, ELEVATIONS, AND SIDE SLOPE VARIATIONS, SEE CROSS SECTIONS.
- UNLESS OTHERWISE SPECIFIED, THE GRADING GRADE CROSS SLOPES WILL BE THE SAME AS THE DRIVING LANES AND SHOULDERS.
- MOST SECTIONS ARE SHOWN FOR NORMAL CROWN. FOR SUPERELEVATIONS, SEE SHEET NO. 369 TO 376.
- FOR INPLACE TOPSOIL DEPTHS, SEE SHEET NO. 87.
- FOR SUBCUT INFORMATION, SEE SHEET NO. 87.
- ALL BITUMINOUS MIXES FOR ENTIRE PROJECT SHALL BE PLACED IN 2" OR 3" LIFTS MAXIMUM.
- FOR THE 3" BITUMINOUS TRAIL, USE TYPE 12.5 WEARING COURSE MIX (SPWEB340C)

① VAR. AGGREGATE SHOULDERING, CLASS 2, SEE NOTE NO. 15 ON SHEET NO. 14.

② TAPERS FROM 10' TO 2' STA. 675+95 TO 677+15.

③ TAPERS FROM 12' TO 22' STA. 675+95 TO 677+15.

④ BEGIN GORE AREA STA. 678+05. SEE CONSTRUCTION PLAN SHEET NO. 211 AND 212.

⑤ AGGREGATE SHOULDERING CLASS 3.

TH13EB SHEET 1 OF 21

S.P. 179-020-031 S.P. 019-605-028

TYPICAL SECTIONS

DRAWN BY: MS	CHECKED BY: HS	CERTIFIED BY _____ LICENSED PROFESSIONAL ENGINEER	LIC. NO. 18520 DATE 6/18/12	STATE PROJ. NO. 1901-148 (T.H. 13)	SHEET NO. 69 OF 442 SHEETS

PLOTTED/REVISED: 13-JUN-2012 08:05
DISTRICT #: METRO
IPLOT NAME: d190lf48_tsll
FILENAME: Projects/DM_ROS/013/1901/148/Design/PlanSheets/Typicals/d190lf48_tsl.dgn

PLOTTED/REVISED: 13-JUN-2012 08:05
DISTRICT #: METRO
IPLOT NAME: d190l148_tsl2
FILENAME: Projects/DM_ROS/013/1901/148/Design/PlanSheets/Typicals/d190l148_tsl.dgn

INSET A

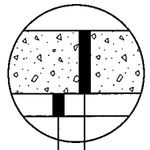

11" NON REINFORCED CONCRETE PAVEMENT, SPEC. 2301
4" AGGREGATE BASE, CLASS 6

INSET C

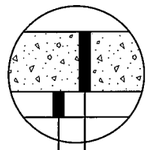

7" NON REINFORCED CONCRETE PAVEMENT, SPEC. 2301
VAR. AGGREGATE BASE, CLASS 6

TH13EB STA. 683+14 TO 699+25

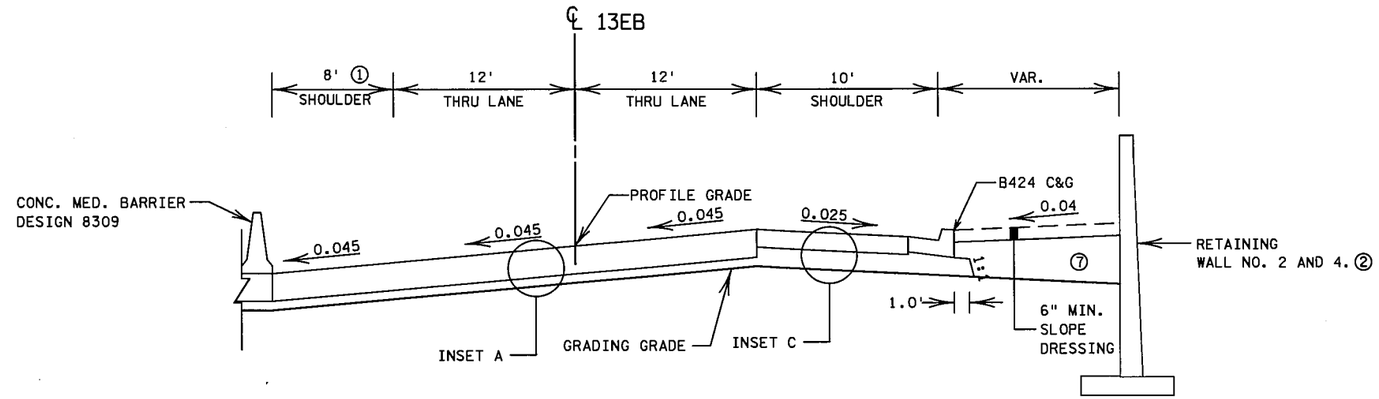

TH13EB STA. 699+25 TO 706+01

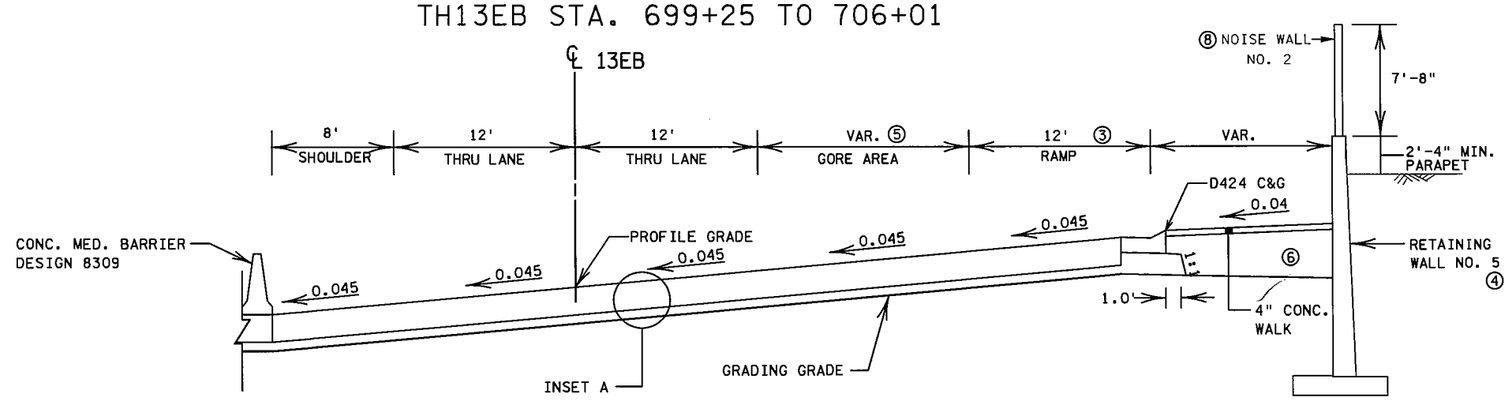

NOTE:

- FOR GENERAL TYPICAL SECTION NOTES, SEE SHEET NO. 69.

① VAR. WIDTH SHOULDER STA. 683+14 TO 685+16. SEE CONSTRUCTION PLAN SHEET NO. 212.

② FOR RETAINING WALL NO. 2 DETAILS, SEE SHEET NO. 281 TO 287.
FOR RETAINING WALL NO. 4 DETAILS, SEE SHEET NO. 295 TO 300.

③ TAPERS FROM 12' TO 8' 701+01 TO 706+01.

④ FOR RETAINING WALL NO. 5 DETAILS, SEE SHEET NO. 301 TO 320.

⑤ END GORE AREA STA. 704+01.
SEE CONSTRUCTION PLAN SHEET NO. 213.

⑥ AGGREGATE SHOULDERING, CLASS 3.

⑦ SUITABLE GRADING MATERIAL.

⑧ FOR NOISE WALL DETAILS, SEE SHEET NO. 361 TO 364.

S.P. 179-020-031 S.P. 019-605-028

TYPICAL SECTIONS

DRAWN BY: MS	CHECKED BY: HS	CERTIFIED BY LICENSED PROFESSIONAL ENGINEER LIC. NO. 18520 DATE 6/18/12	STATE PROJ. NO. 1901-148 (T.H. 13) SHEET NO. 70 OF 442 SHEETS

INSET A

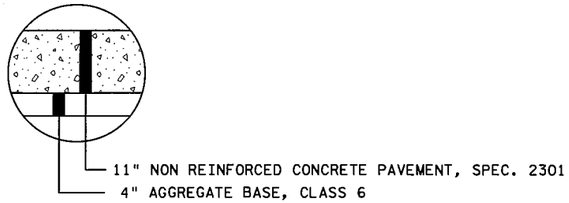

INSET C

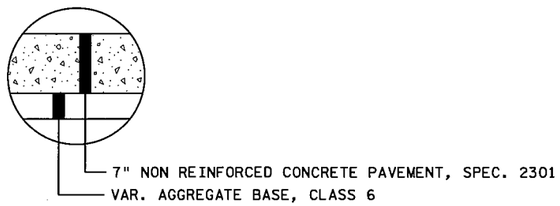

TH13EB STA. 706+01 TO 714+50

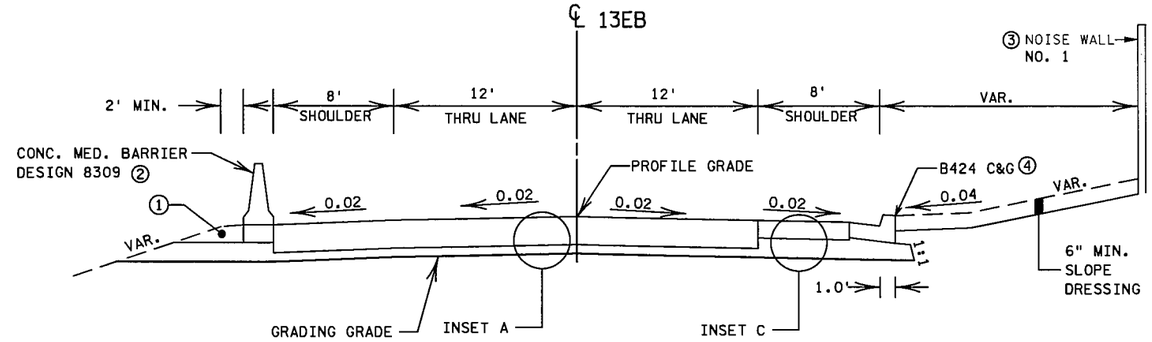

TH13EB STA. 714+50 TO 719+50

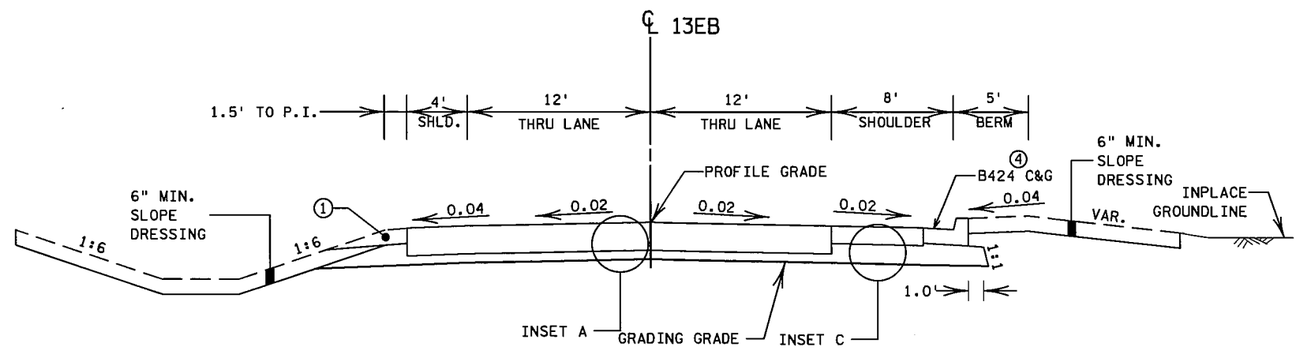

TH13EB STA. 719+50 TO 724+90
TH13EB STA. 731+76 TO 733+27

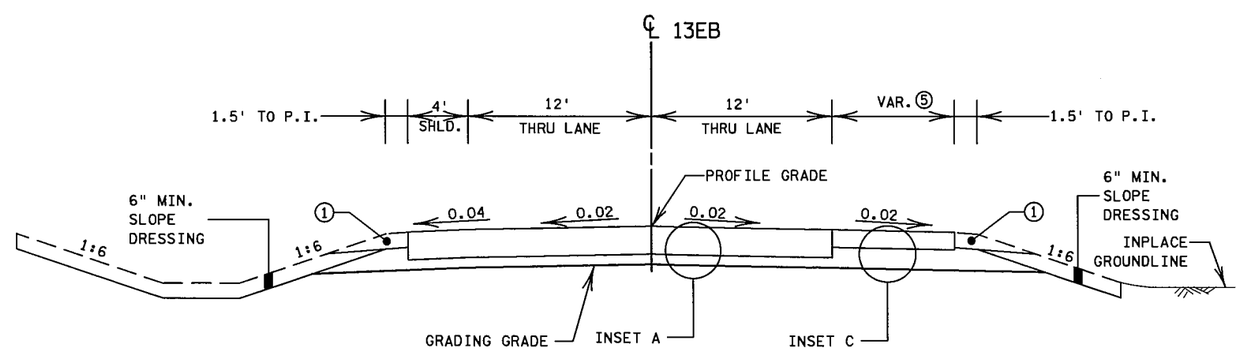

NOTE:
- FOR GENERAL TYPICAL SECTION NOTES, SEE SHEET NO. 69.

① VAR. AGGREGATE SHOULDERING, CLASS 2, SEE NOTE NO. 15 ON SHEET NO. 14.

② CONCRETE MEDIAN BARRIER ENDS AT STA. 714+53.

③ NOISE WALL ENDS AT STA. 719+36.

④ B424 C&G ENDS AT STA. 717+44.

⑤ FOR GORE AREAS, SEE CONSTRUCTION PLAN SHEETS NO. 214 TO 215.

PLOTTED/REVISED: 13-JUN-2012 08:05
DISTRICT #: METRO
IPLOT NAME: d190148_tsl3
FILENAME: Projects/DM_ROS/013/1901/148/Design/PlanSheets/Typicals/d190148_tsl.dgn

S.P. 179-020-031 S.P. 019-605-028

TYPICAL SECTIONS

DRAWN BY: MS	CHECKED BY: HS	CERTIFIED BY LICENSED PROFESSIONAL ENGINEER	LIC. NO. 18520 DATE 6/18/12	STATE PROJ. NO. 1901-148 (T.H. 13)	SHEET NO. 71 OF 442 SHEETS

INSET A

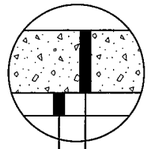

11" NON REINFORCED CONCRETE PAVEMENT, SPEC. 2301
4" AGGREGATE BASE, CLASS 6

INSET C

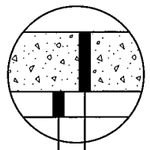

7" NON REINFORCED CONCRETE PAVEMENT, SPEC. 2301
VAR. AGGREGATE BASE, CLASS 6

TH13EB STA. 724+90 TO 731+76

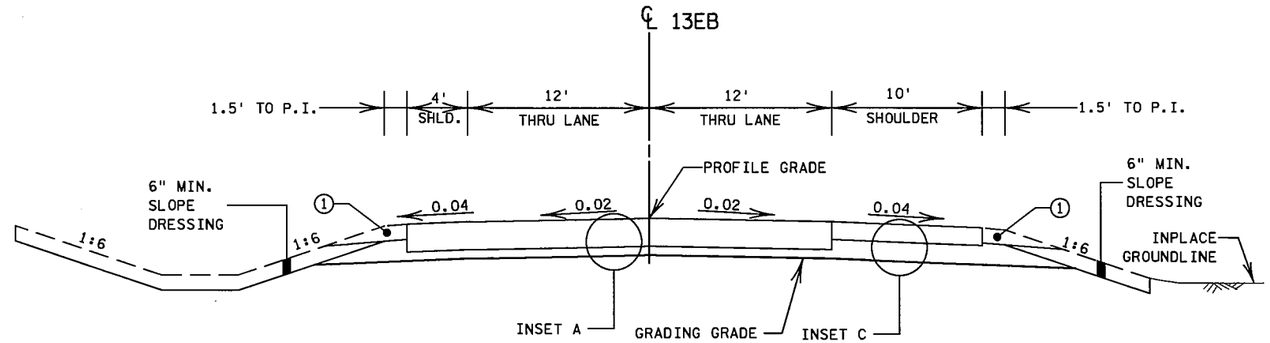

TH13WB STA. 664+64 TO 674+23

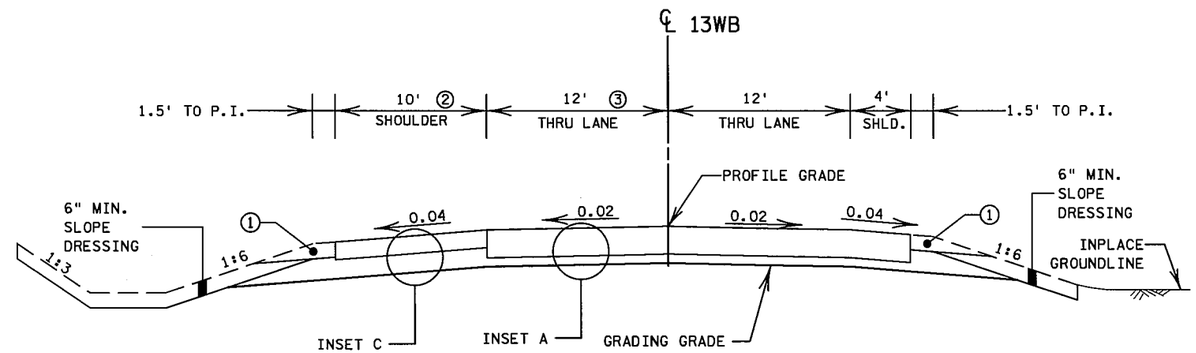

TH13WB STA. 674+23 TO 681+29

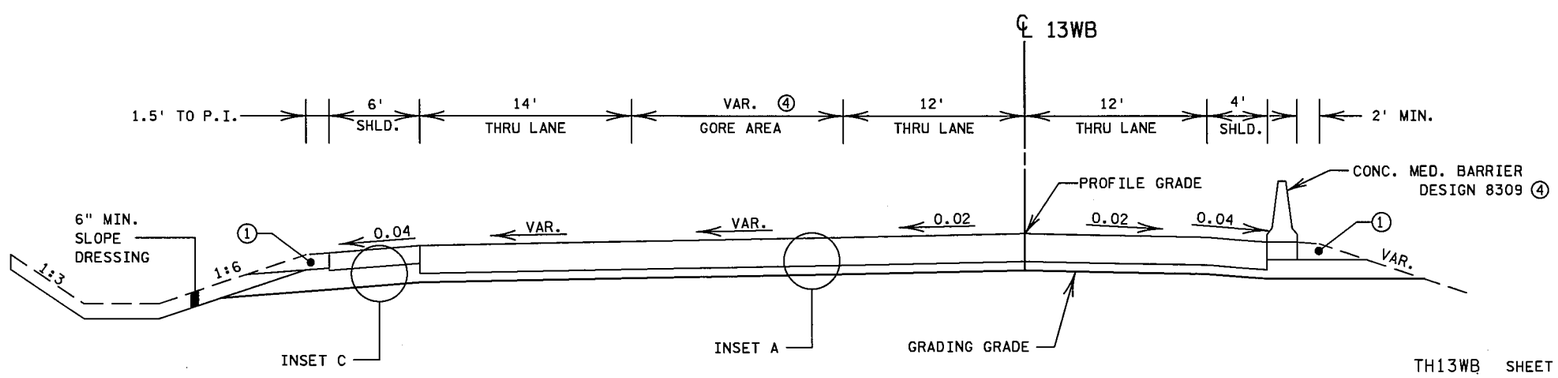

NOTE:
- FOR GENERAL TYPICAL SECTION NOTES, SEE SHEET NO. 69.

① VAR. AGGREGATE SHOULDERING, CLASS 2, SEE NOTE NO. 15 ON SHEET NO. 14.
② TAPERS FROM 10' TO 6' 670+03 TO 671+23.
③ TAPERS FROM 12' TO 26' STA. 670+03 TO 671+23.
④ GORE AREA TAPERS FROM 0' TO 14' STA. 680+13 TO 681+29. SEE CONSTRUCTION PLAN SHEET NO. 212.
⑤ CONCRETE MEDIAN BARRIER BEGIN AT STA. 674+74.

TH13WB SHEET 4 OF 21

S.P. 179-020-031 S.P. 019-605-028

TYPICAL SECTIONS

DRAWN BY: MS	CHECKED BY: HS	CERTIFIED BY LICENSED PROFESSIONAL ENGINEER	LIC. NO. 18520 DATE 6/18/12	STATE PROJ. NO. 1901-148 (T.H. 13)	SHEET NO. 72 OF 442 SHEETS

PLOTTED/REVISED: 13-JUN-2012 08:06
DISTRICT #: METRO
IPLOT NAME: d190l148_tsl4
FILENAME: Projects/DM_ROS/013/1901/148/Design/PlanSheets/Typicals/d190l148_tsl.dgn

INSET A

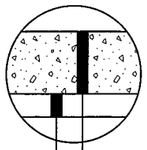

11" NON REINFORCED CONCRETE PAVEMENT, SPEC. 2301
4" AGGREGATE BASE, CLASS 6

INSET C

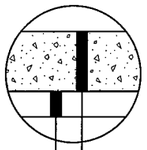

7" NON REINFORCED CONCRETE PAVEMENT, SPEC. 2301
VAR. AGGREGATE BASE, CLASS 6

TH13WB STA. 681+29 TO 686+98

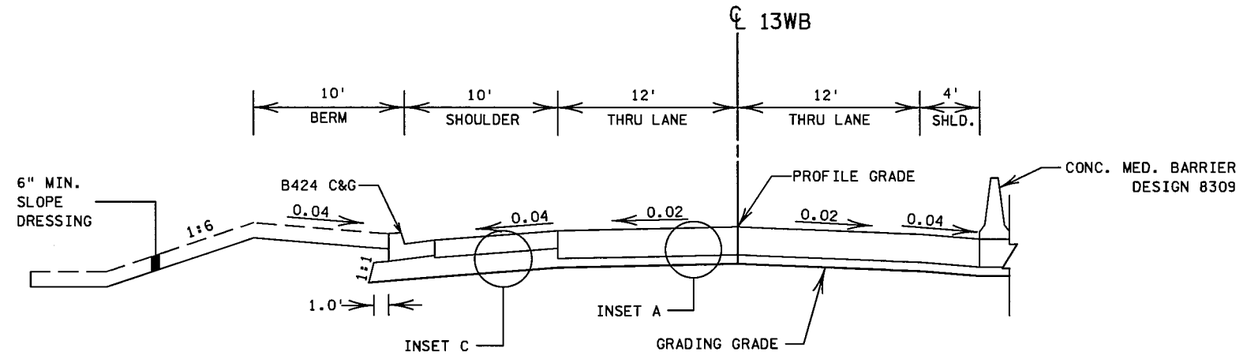

TH13WB STA. 686+98 TO 689+28

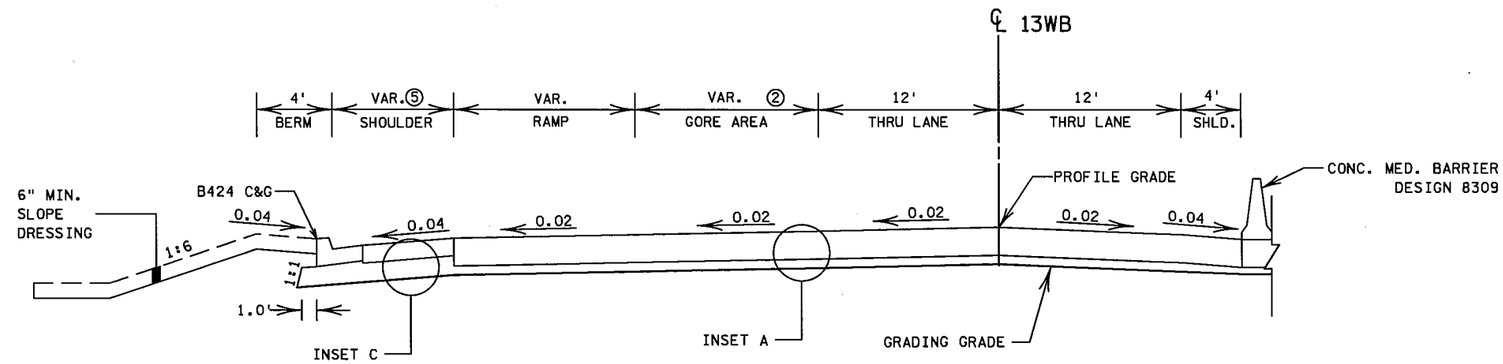

TH13WB BR. NO. 689+28 TO 707+47

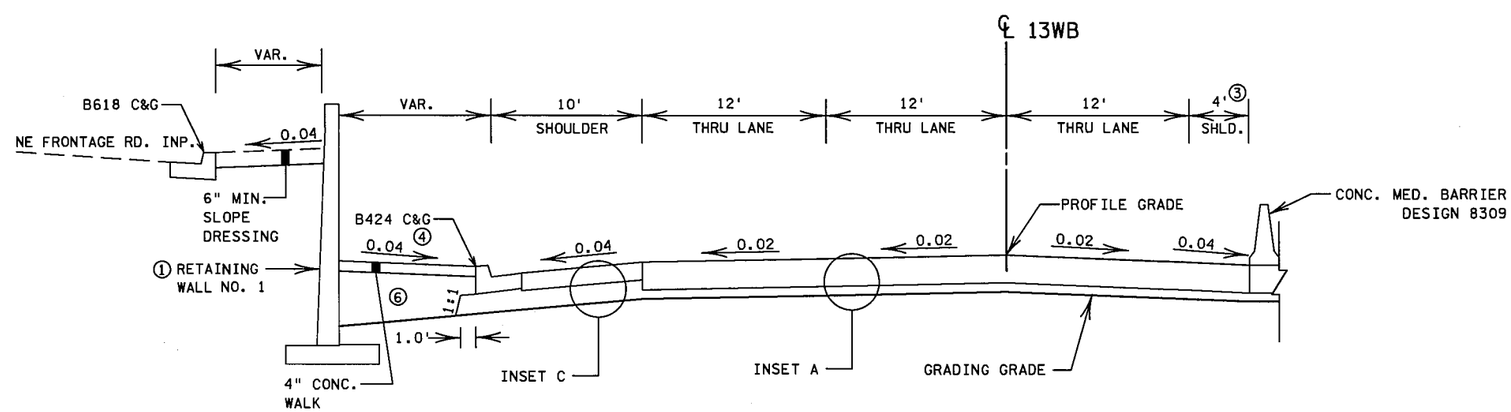

NOTE:

- FOR GENERAL TYPICAL SECTION NOTES, SEE SHEET NO. 69.

① FOR RETAINING WALL NO. 1 DETAILS, SEE SHEET NO. 266 TO 280.

② GORE AREA TAPERS FROM 25' TO 0' STA. 686+98 TO 688+12. SEE CONSTRUCTION PLAN SHEET NO. 212

③ TAPERS FROM 4' TO 14' STA. 703+86 TO 707+47.

④ B424 C&G ENDS AT STA. 710+63.

⑤ TAPERS FROM 0' TO 8' STA. 688+12 TO 689+28.

⑥ GRANULAR MATERIAL.

PLOTTED/REVISED: 13-JUN-2012 08:06
DISTRICT #: METRO
IPLOT NAME: d1901148_tsl5
FILENAME: Projects/DM_ROS/013/1901/148/Design/PlanSheets/Typicals/d1901148_tsl.dgn

TH13WB SHEET 5 OF 21

S.P. 179-020-031 S.P. 019-605-028

TYPICAL SECTIONS

DRAWN BY: MS	CHECKED BY: HS	CERTIFIED BY LICENSED PROFESSIONAL ENGINEER LIC. NO. 18520 DATE 6/18/12	STATE PROJ. NO. 1901-148 (T.H. 13) SHEET NO. 73 OF 442 SHEETS

INSET A

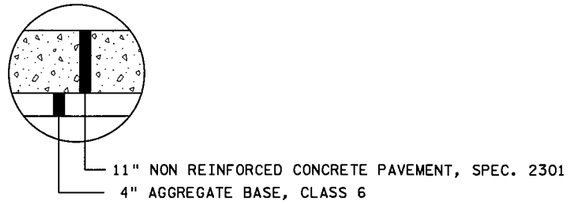

INSET C

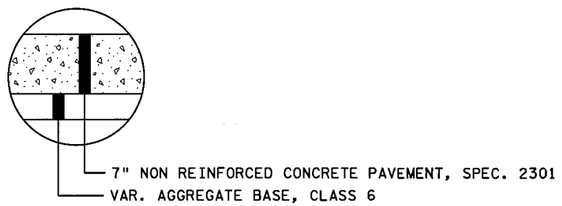

TH13WB STA. 707+47 TO 720+03

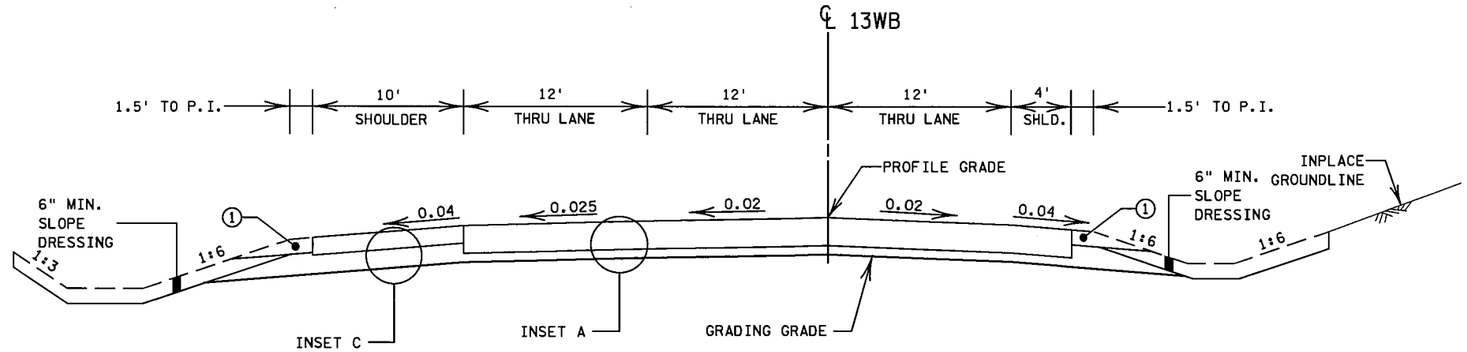

TH13WB STA. 721+59 TO 731+65

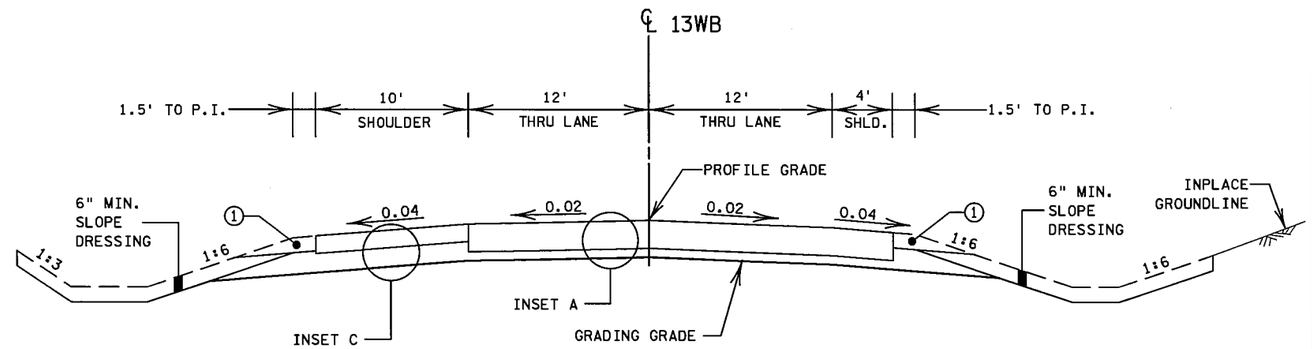

TH13WB STA. 720+03 TO 721+59
TH13WB STA. 731+65 TO 733+28

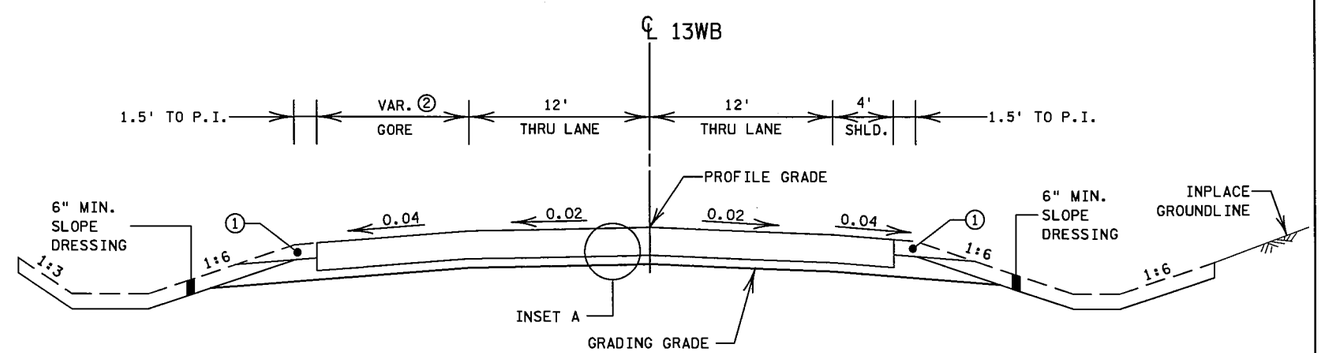

NOTE:

- FOR GENERAL TYPICAL SECTION NOTES, SEE SHEET NO. 69.

① VAR. AGGREGATE SHOULDERING, CLASS 2, SEE NOTE NO. 15 ON SHEET NO. 14.

② SEE CONSTRUCTION PLAN SHEET NO. 214 AND 215.

TH13WB SHEET 6 OF 21

S.P. 179-020-031 S.P. 019-605-028

TYPICAL SECTIONS

DRAWN BY: MS	CHECKED BY: HS	CERTIFIED BY LICENSED PROFESSIONAL ENGINEER LIC. NO. 18520 DATE 6/18/12	STATE PROJ. NO. 1901-148 (T.H. 13) SHEET NO. 74 OF 442 SHEETS

PLOTTED/REVISED: 13-JUN-2012 08:06
DISTRICT #: METRO
IPLOT NAME: d1901148_tsl6
FILENAME: Projects/DM_ROS/013/1901/148/Design/PlanSheets/Typicals/d1901148_tsl.dgn

SBCSAH5 STA. 103+00 TO 106+14 NBCSAH5 STA. 103+00 TO 106+14

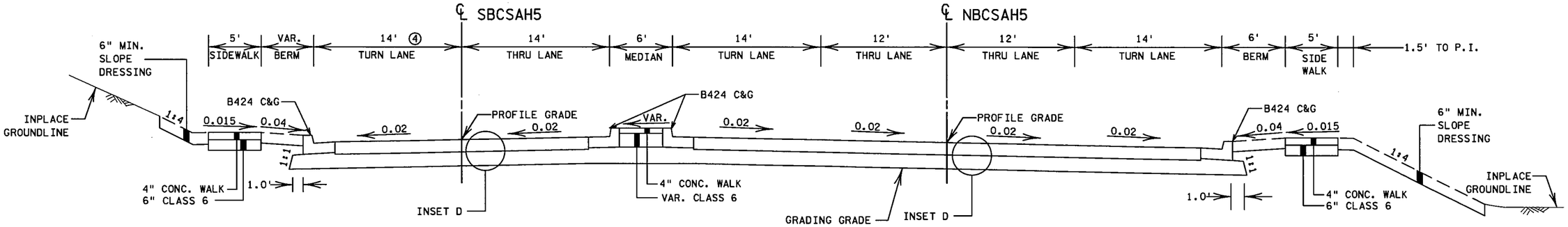

SBCSAH5 STA. 106+14 TO 111+50 NBCSAH5 STA. 106+14 TO 111+39

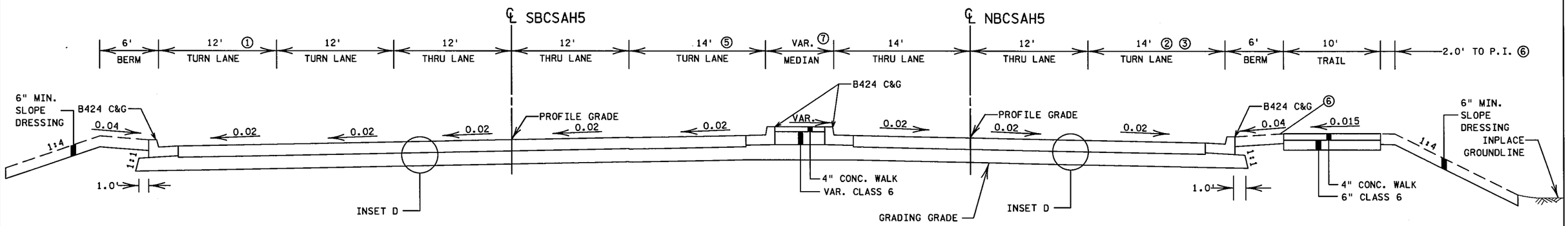

INSET D

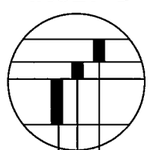

- 4" TYPE SP 12.5 WEARING COURSE MIXTURE (SPWEB540F)
- 3" TYPE SP 12.5 NON WEARING COURSE MIXTURE (SPNWB430B)
- 8" AGGREGATE BASE, CLASS 6

NOTE:

- FOR GENERAL TYPICAL SECTION NOTES, SEE SHEET NO. 69.
- ALONG CSAH5, A CLEARANCE OF 1.5' FROM THE BACK OF THE CURB TO FIXED OBJECTS MUST BE PROVIDED.

① TURN LANE BEGINS AT STA. 108+38.
TAPERS FROM 12' TO 0' STA. 109+57 TO 110+17

② RIGHT TURN LANE TAPERS FROM 0' TO 12' STA. 106+84 TO 108+04.

③ RAISED ISLAND STARTS AT STA. 111+05.

④ TAPERS FROM 26' TO 14' STA. 103+00 TO 104+48.

⑤ TAPERS FROM 14' TO 2' STA. 108+06 TO 110++86.

⑥ 2.0' CLEARANCE REQUIRED.

⑦ 4.0' MIN.

NBCSAH5
SBCSAH5 SHEET 7 OF 21

S.P. 179-020-031 S.P. 019-605-028

TYPICAL SECTIONS

DRAWN BY: MS	CHECKED BY: HS	CERTIFIED BY LICENSED PROFESSIONAL ENGINEER LIC. NO. 18520 DATE 6/18/12	STATE PROJ. NO. 1901-148 (T.H. 13) SHEET NO. 75 OF 442 SHEETS

PLOTTED/REVISED: 14-JUN-2012 09:58
DISTRICT #: METRO
IPLOT NAME: d190l148_tsl
FILENAME: Projects/DM_ROS/013/1901/148/Design/PlanSheets/Typicals/d190l148_tsl.dgn

SBCSAH5 STA. 111+50 TO BR. NO. 19036

NBCSAH5 STA. 111+39 TO BR. NO. 19036

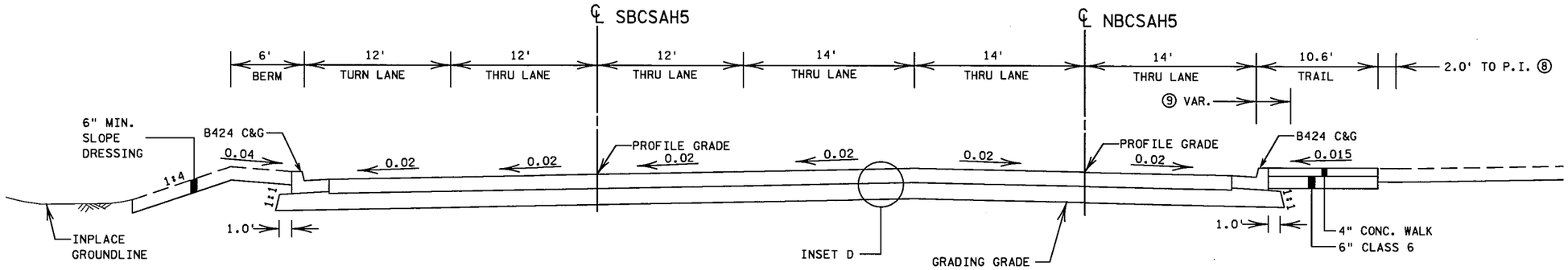

SBCSAH5 BR. NO. 19036 TO 117+00

NBCSAH5 BR. NO. 19036 TO STA. 116+94

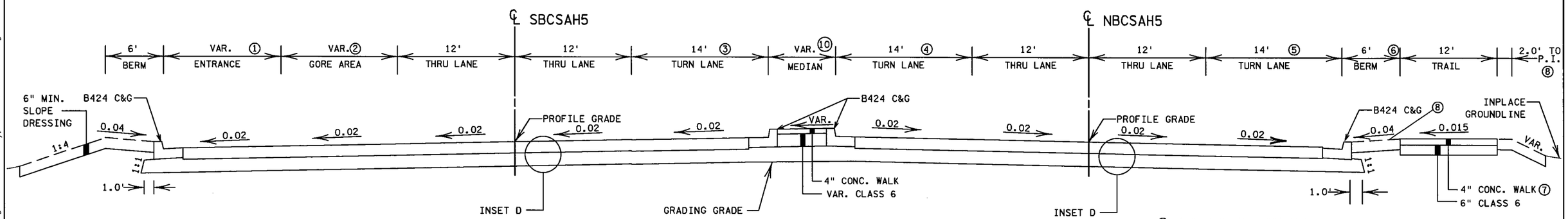

⑥ 2.0' CLEARANCE REQUIRED.

INSET D

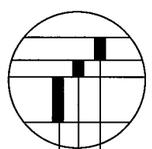

4" TYPE SP 12.5 WEARING COURSE MIXTURE (SPWEB540F)
3" TYPE SP 12.5 NON WEARING COURSE MIXTURE (SPNWB430B)
8" AGGREGATE BASE, CLASS 6

NOTE:
- FOR GENERAL TYPICAL SECTION NOTES, SEE SHEET NO. 69.
- ALONG CSAH5, A CLEARANCE OF 1.5' FROM THE BACK OF THE CURB TO FIXED OBJECTS MUST BE PROVIDED.

① SEE CONSTRUCTION PLAN SHEET NO. 212.
② TAPERS FROM 0' TO 12' STA. 115+00 TO 115+68.
③ TAPERS FROM 12' TO 0' STA. 115+36 TO 116+56.
④ TAPERS FROM 2'TO 14' STA. 112+55 TO 113+75
⑤ TAPERS FROM 2' TO 14' STA. 113+76 TO 114+96
⑥ VARIABLE BERM 0' TO 6'
⑦ BEGIN 3" BIT WALK AT STA. 115+35.
⑧ 2.0' CLEARANCE REQUIRED.
⑨ 2.6' MIN.
⑩ 4.0' MIN.

NBCSAH5
SBCSAH5 SHEET 8 OF 21

S.P. 179-020-031 S.P. 019-605-028

TYPICAL SECTIONS

DRAWN BY: MS	CHECKED BY: HS	CERTIFIED BY LICENSED PROFESSIONAL ENGINEER	LIC. NO. 18520 DATE 6/18/12	STATE PROJ. NO. 1901-148 (T.H. 13) SHEET NO. 76 OF 442 SHEETS

PLOTTED/REVISED: 13-JUN-2012 08:06
DISTRICT #: METRO
IPLOT NAME: d1901148_tsl8
FILENAME: Projects/DM_ROS/013/1901/148/Design/PlanSheets/Typicals/d1901148_tsl.dgn

SBCSAH5 STA. 117+00 TO 121+02

NBCSAH5 STA. 116+94 TO 118+91

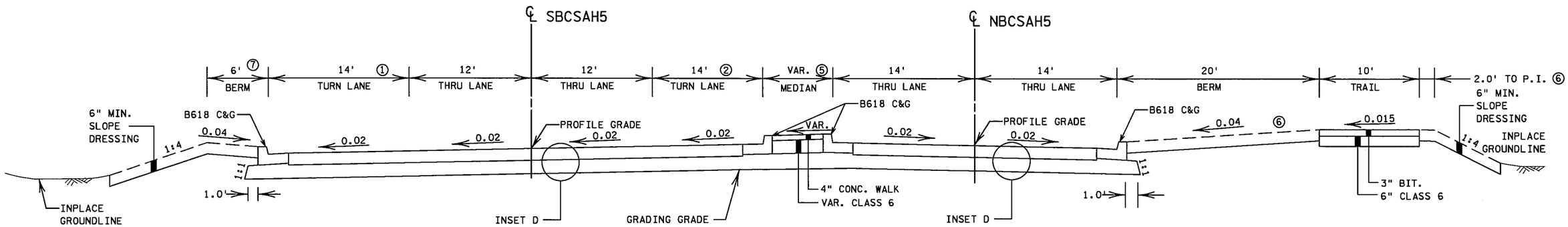

SBCSAH5 STA. 121+02 TO 124+28

NBCSAH5 STA. 18+91 TO 124+20

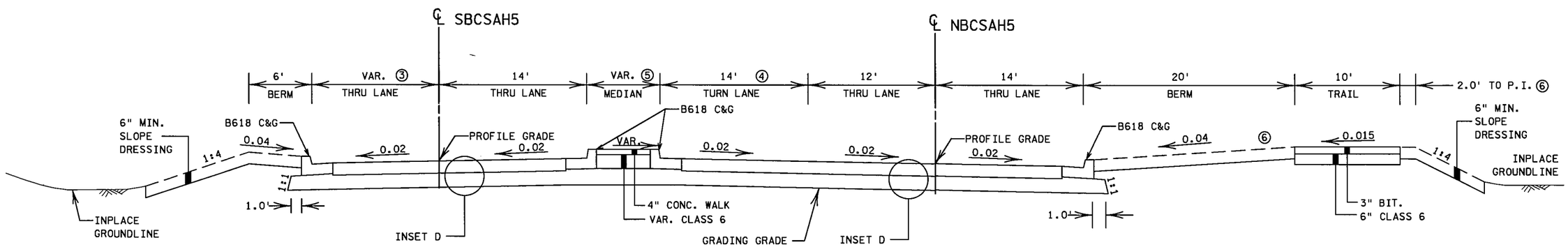

INSET D

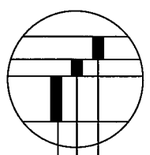

- 4" TYPE SP 12.5 WEARING COURSE MIXTURE (SPWEB540F)
- 3" TYPE SP 12.5 NON WEARING COURSE MIXTURE (SPNWB430B)
- 8" AGGREGATE BASE, CLASS 6

NOTE:

- FOR GENERAL TYPICAL SECTION NOTES, SEE SHEET NO. 69.
- ALONG CSAH5, A CLEARANCE OF 1.5' FROM THE BACK OF THE CURB TO FIXED OBJECTS MUST BE PROVIDED.

① TAPERS FROM 14' TO 2' STA. 120+42 TO 121+62.

② TAPERS FROM 14' TO 2' STA. 119+96 TO 121+16 MIN. 12' TO 2'.

③ SEE CONSTRUCTION SHEET NO. 217.

④ TAPERS FROM 2' TO 14' STA. 118+91 TO 120+11.

⑤ RAISED ISLAND ENDS AT STA. 123+00 4.0' MIN. MEDIAN.

⑥ 2.0' CLEARANCE REQUIRED.

⑦ 10.0' AND 4" CONCRETE WALK AT RWALL6. FOR DETAILS, SEE SHEET NO. 217.

NBCSAH5
SBCSAH5 SHEET 9 OF 21

S.P. 179-020-031 S.P. 019-605-028

TYPICAL SECTIONS

DRAWN BY: MS	CHECKED BY: HS	CERTIFIED BY LICENSED PROFESSIONAL ENGINEER LIC. NO. 18520 DATE 6/18/12	STATE PROJ. NO. 1901-148 (T.H. 13) SHEET NO. 77 OF 442 SHEETS

PLOTTED/REVISED: 13-JUN-2012 08:06
DISTRICT #: METRO
IPLOT NAME: d190148_tsl9
FILENAME: Projects/DM_ROS/013/1901/148/Design/PlanSheets/Typicals/d190148_tsl.dgn

WBWIL STA. 44+00 TO 45+00

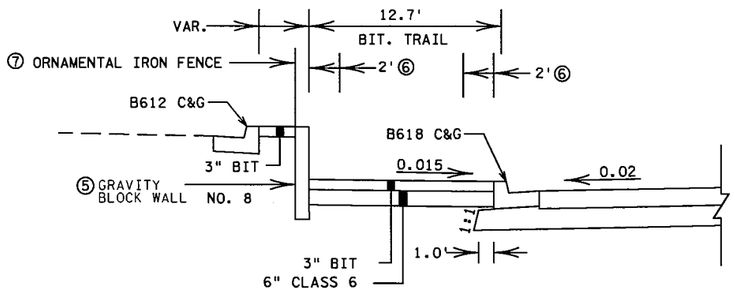

NBCSAH5 STA. 124+20 TO 126+39 ①

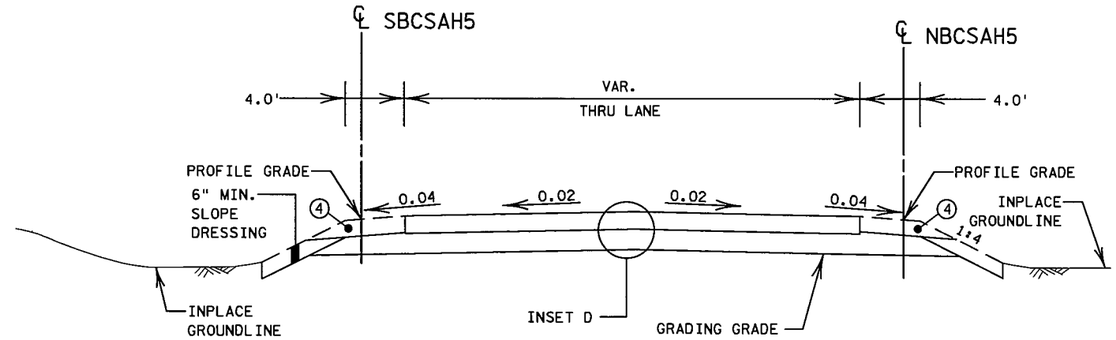

WBWIL STA. 40+12 TO 45+30

EBWIL STA. 40+11 TO 45+30

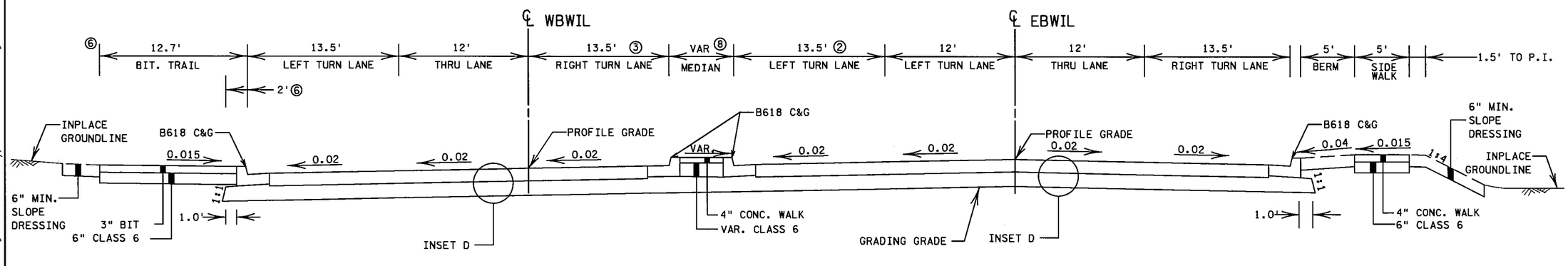

INSET D

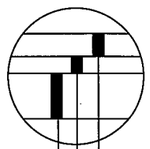

4" TYPE SP 12.5 WEARING COURSE MIXTURE (SPWEB540F)
3" TYPE SP 12.5 NON WEARING COURSE MIXTURE (SPNWB430B)
8" AGGREGATE BASE, CLASS 6

NOTE:

- FOR GENERAL TYPICAL SECTION NOTES, SEE SHEET NO. 69.
- ALONG CSAH5, A CLEARANCE OF 1.5' FROM THE BACK OF THE CURB TO FIXED OBJECTS MUST BE PROVIDED.

① MATCH INTO EXISTING. FOR DETAILS, SEE SHEET NO. 217.

② TAPERS FROM 1.5' TO 25.5' STA. 41+60 TO 42+80.

③ TAPERS FROM 13.5' TO 1.5' STA. 42+11 TO 42+71.

④ VAR. AGGREGATE SHOULDERING, CLASS 2, SEE NOTE NO. 15 ON SHEET NO. 14.

⑤ FOR GRAVITY BLOCK WALL NO. 8 DETAILS, SEE SHEET NO. 351 TO 352.

⑥ 2.0' CLEARANCE REQUIRED.

⑦ ORNAMENTAL IRON FENCE. FOR DETAILS, SEE SHEET NO. 97.

⑧ 4.0' MIN.

NBCSAH5
WBWIL

SHEET 10 OF 21

S.P. 179-020-031 S.P. 019-605-028

TYPICAL SECTIONS

DRAWN BY: MS	CHECKED BY: HS	CERTIFIED BY [signature] LICENSED PROFESSIONAL ENGINEER LIC. NO. 18520 DATE 6/18/12	STATE PROJ. NO. 1901-148 (T.H. 13) SHEET NO. 78 OF 442 SHEETS

PLOTTED/REVISED: 13-JUN-2012 08:06
DISTRICT #: METRO
PLOT NAME: d190l148_Jsl10
FILENAME: Projects/DM_ROS/013/190l/148/Design/PlanSheets/Typicals/d190l148_Jsl.dgn

INSET B

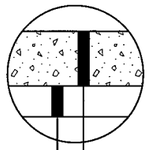

8.5" NON REINFORCED CONCRETE PAVEMENT, SPEC. 2301
4" AGGREGATE BASE, CLASS 6

SERAMP STA. 60+12 TO 68+55

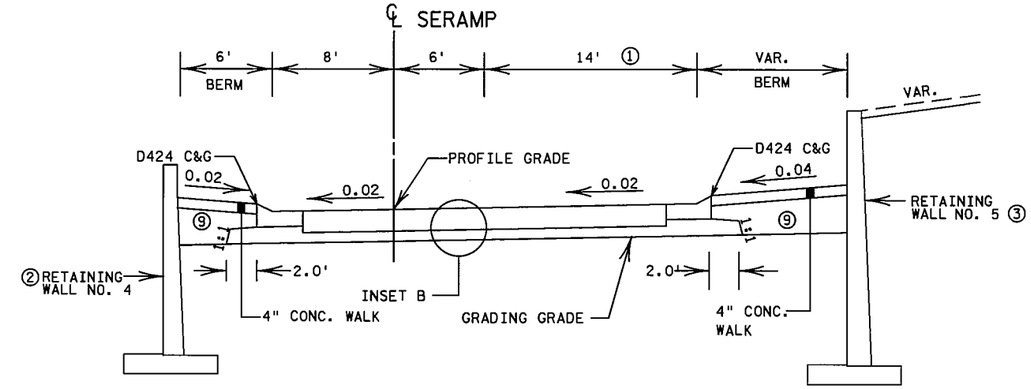

SWRAMP STA. 50+00 TO 58+50

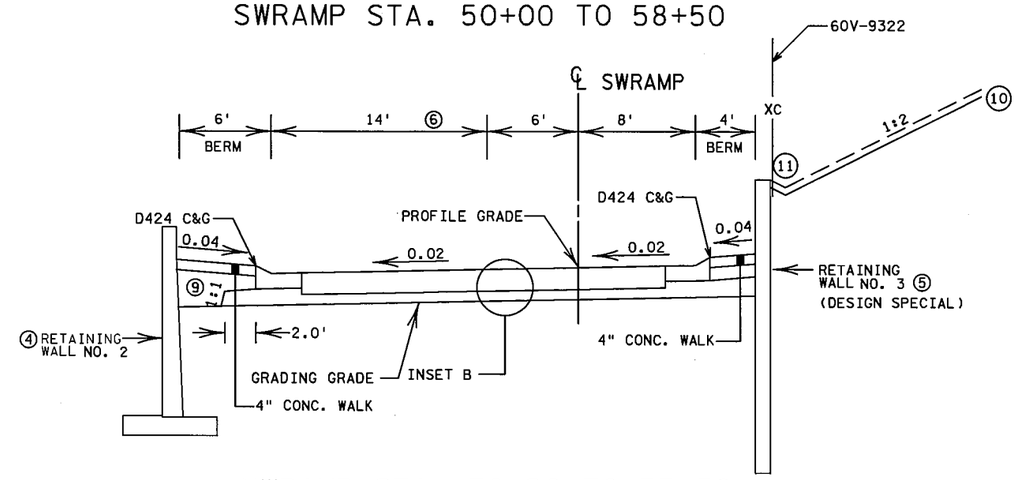

NWRAMP STA. 70+26 TO 73+58

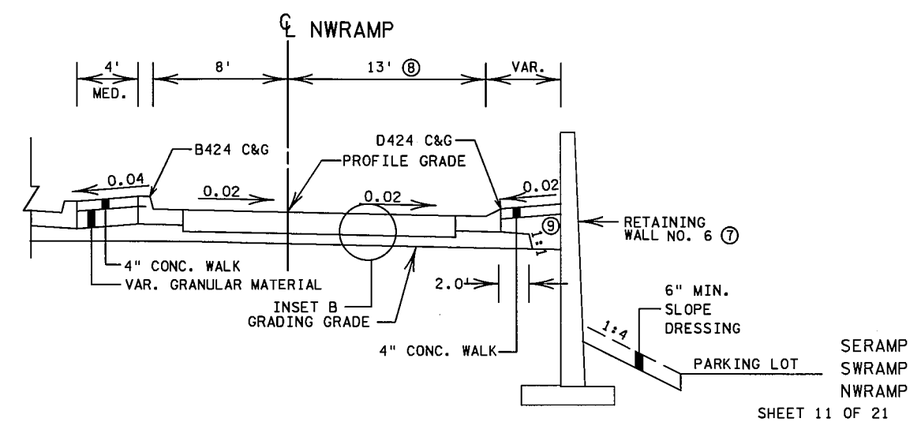

SERAMP
SWRAMP
NWRAMP

NOTE:
- FOR GENERAL TYPICAL SECTION NOTES, SEE SHEET NO. 69.

① TAPERS FROM 14' TO 2' STA. 62+59 TO 67+39.
② FOR RETAINING WALL NO. 4 DETAILS, SEE SHEET NO. 295 TO 300.
③ FOR RETAINING WALL NO. 5 DETAILS, SEE SHEET NO. 301 TO 320.
④ FOR RETAINING WALL NO. 2 DETAILS, SEE SHEET NO. 281 TO 287.
⑤ FOR RETAINING WALL NO. 3 DETAILS, SEE SHEET NO. 288 TO 294, AND SPECIAL PROVISIONS.
⑥ TAPERS FROM 2' TO 14' STA. 53+73 TO 55+53.
⑦ FOR RETAINING WALL NO. 6 DETAILS, SEE SHEET NO. 321 TO 330.
⑧ TAPERS FROM 13' TO 10' STA. 71+30 TO 74+30.
⑨ AGGREGATE SHOULDERING, CLASS 3.
⑩ BACK SLOPE TO TOUCH DOWN PRIOR TO INPLACE ORNAMENTAL FENCE.
⑪ 0.5' DEEP SWALE.

SHEET 11 OF 21

S.P. 179-020-031 S.P. 019-605-028

TYPICAL SECTIONS

DRAWN BY: MS	CHECKED BY: HS	CERTIFIED BY LICENSED PROFESSIONAL ENGINEER LIC. NO. 18520 DATE 6/18/12	STATE PROJ. NO. 1901-148 (T.H. 13) SHEET NO. 79 OF 442 SHEETS

DISTRICT #: METRO
IPLOT NAME: d1901148_tsIII
FILENAME: Projects/DM_ROS/013/1901/148/Design/PlanSheets/Typicals/d1901148_tsIdgn
PLOTTED/REVISED: 13-JUN-2012 08:06

INSET B

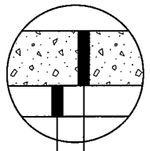

NWRAMP STA. 74+58 TO 78+75

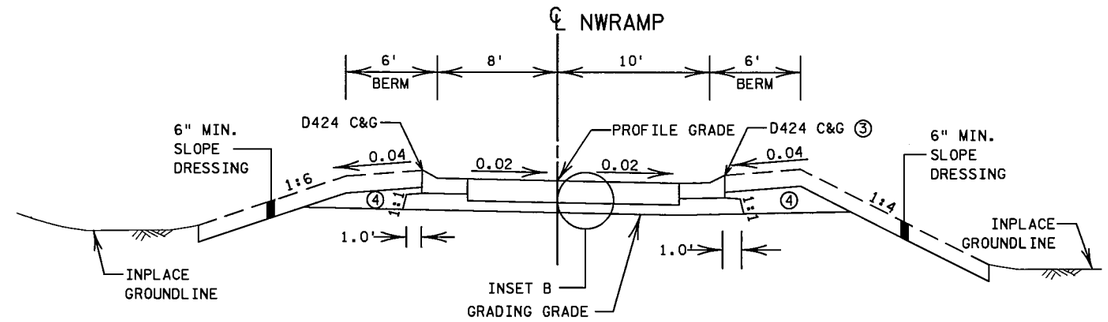

NWLOOP1 STA. 81+04 TO 84+10
NWLOOP1 STA. 85+90 TO 87+50

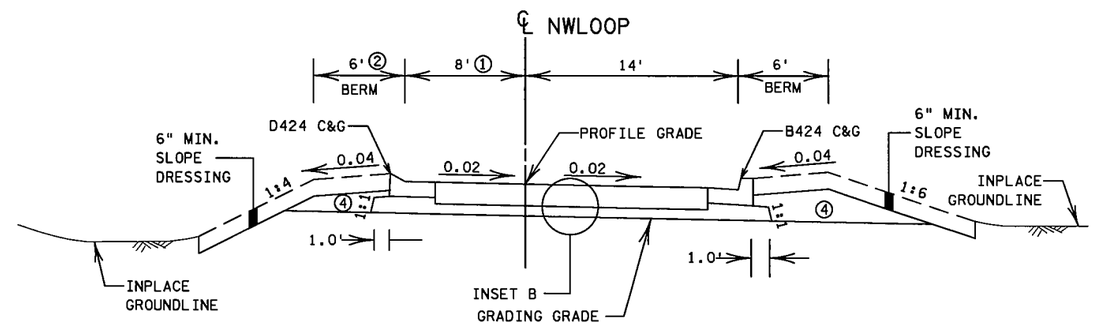

NWLOOP1 STA. 84+10 TO 85+90

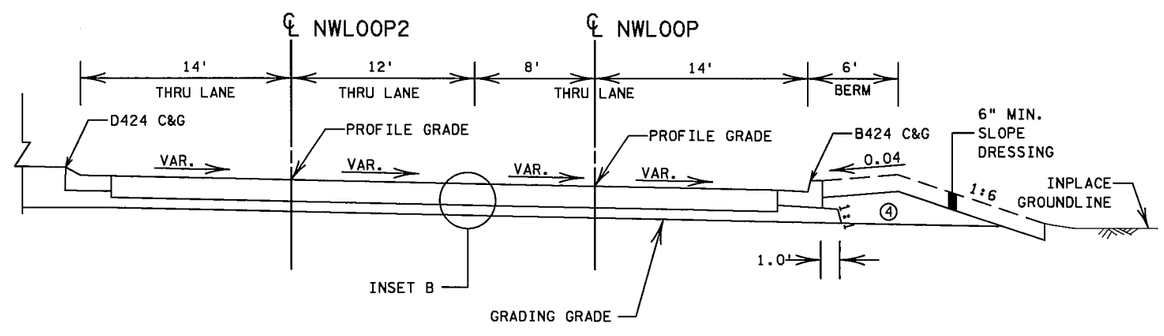

NOTE:
- FOR GENERAL TYPICAL SECTION NOTES, SEE SHEET NO. 69.

① TAPERS FROM 8' TO 24' STA. 82+05 TO 84+10.
② RAISED ISLAND STA. 85+90 TO 87+50.
③ END D424 C&G STA. 77+53, BEGIN 6' SHOULDER.
④ AGGREGATE SHOULDERING, CLASS 3.

NWRAMP
NWLOOP1 SHEET 12 OF 21

S.P. 179-020-031 S.P. 019-605-028

TYPICAL SECTIONS

DRAWN BY: MS	CHECKED BY: HS	CERTIFIED BY [signature] LICENSED PROFESSIONAL ENGINEER	LIC. NO. 18520 DATE 6/18/12	STATE PROJ. NO. 1901-148 (T.H. 13)	SHEET NO. 80 OF 442 SHEETS

PLOTTED/REVISED: 13-JUN-2012 08:06
DISTRICT #: METRO
IPLOT NAME: d1901148_tsl12
FILENAME: Projects/DM_ROS/013/1901/148/Design/PlanSheets/Typicals/d1901148_tsl.dgn

INSET B

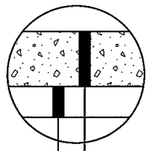

8.5" NON REINFORCED CONCRETE PAVEMENT, SPEC. 2301
4" AGGREGATE BASE, CLASS 6

INSET F

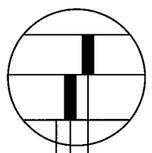

4" TYPE SP 12.5 WEARING COURSE MIXTURE (SPWEB340C)
8" AGGREGATE BASE, CLASS 6
SUBGRADE PREPARATION

NWLOOP2 STA. 86+07 TO 87+18

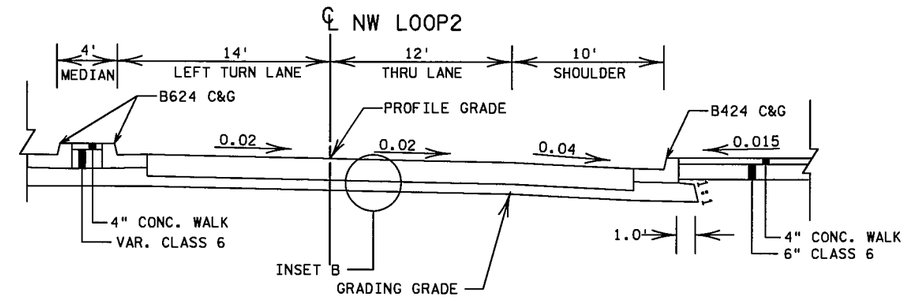

SEFRONT STA. 30+66 TO 32+65

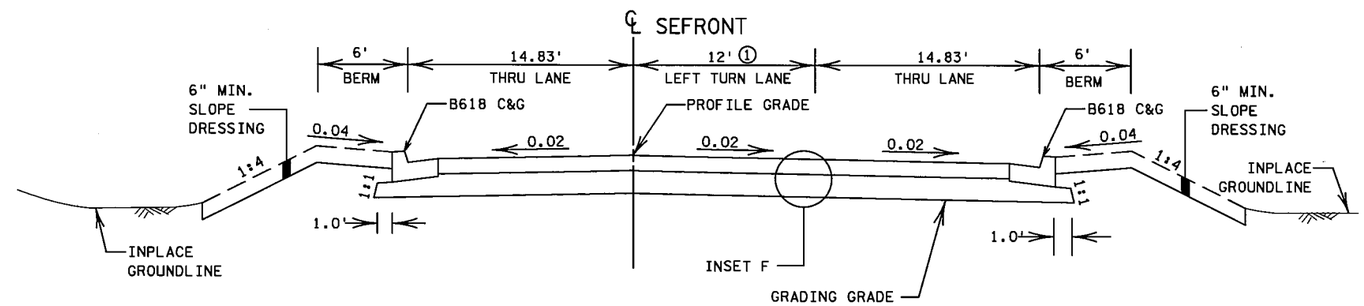

SEFRONT STA. 32+65 TO 39+00

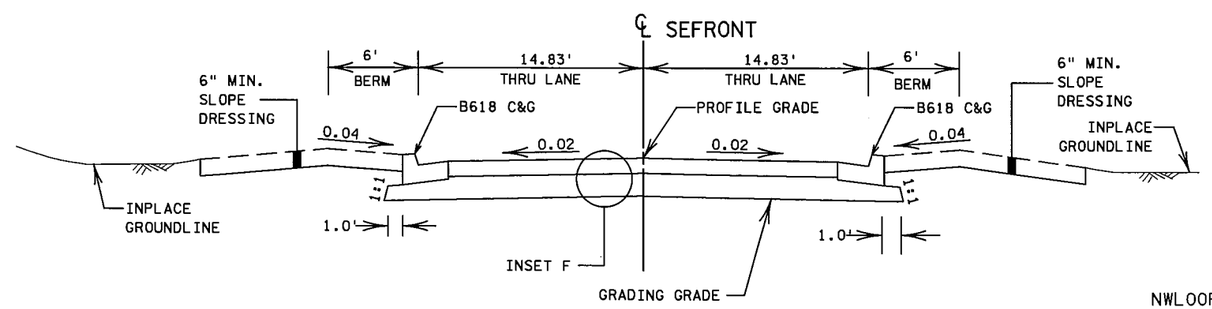

NOTE:
- FOR GENERAL TYPICAL SECTION NOTES, SEE SHEET NO. 69.

① TAPERS FROM 12' TO 0' STA. 31+78 TO 32+65.

NWLOOP2
SEFRONT

SHEET 13 OF 21

S.P. 179-020-031 S.P. 019-605-028

TYPICAL SECTIONS

DRAWN BY: MS	CHECKED BY: HS	CERTIFIED BY LICENSED PROFESSIONAL ENGINEER	LIC. NO. 18520 DATE 6/18/12	STATE PROJ. NO. 1901-148 (T.H. 13)	SHEET NO. 81 OF 442 SHEETS

PLOTTED/REVISED: 13-JUN-2012 08:07
DISTRICT #: METRO
IPLOT NAME: d190148_tsl18
FILENAME: Projects/DM_ROS/013/1901/148/Design/PlanSheets/Typicals/d190148_tsl.dgn

PLOTTED/REVISED: 13-JUN-2012 08:06
DISTRICT #: METRO
IPLOT NAME: d190l148_tsl13
FILENAME: Projects/DM_ROS/013/1901/148/Design/PlanSheets/Typicals/d190l148_tsl.dgn

INSET E

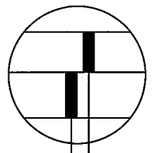

5" TYPE SP 12.5 WEARING COURSE MIXTURE (SPWEB340C)
8" AGGREGATE BASE, CLASS 6

INSET F

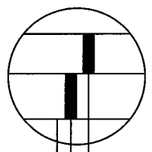

4" TYPE SP 12.5 WEARING COURSE MIXTURE (SPWEB340C)
8" AGGREGATE BASE, CLASS 6
SUBGRADE PREPARATION

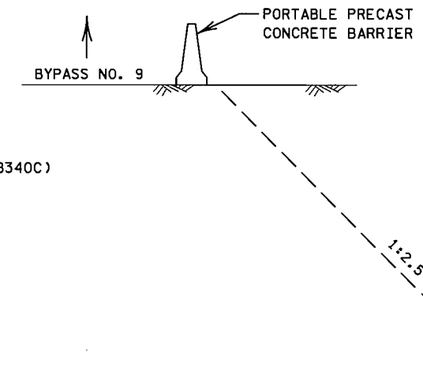

SEFRONT STA. 39+00 TO 64+50

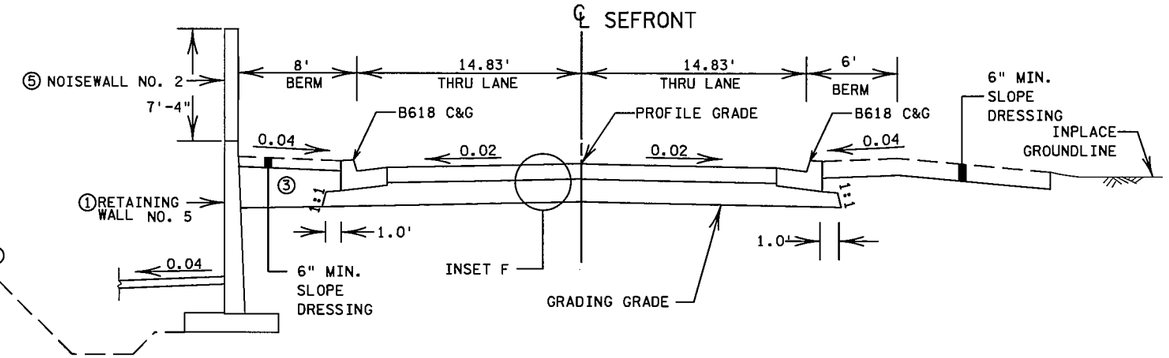

126CON STA. 11+50 TO 18+62

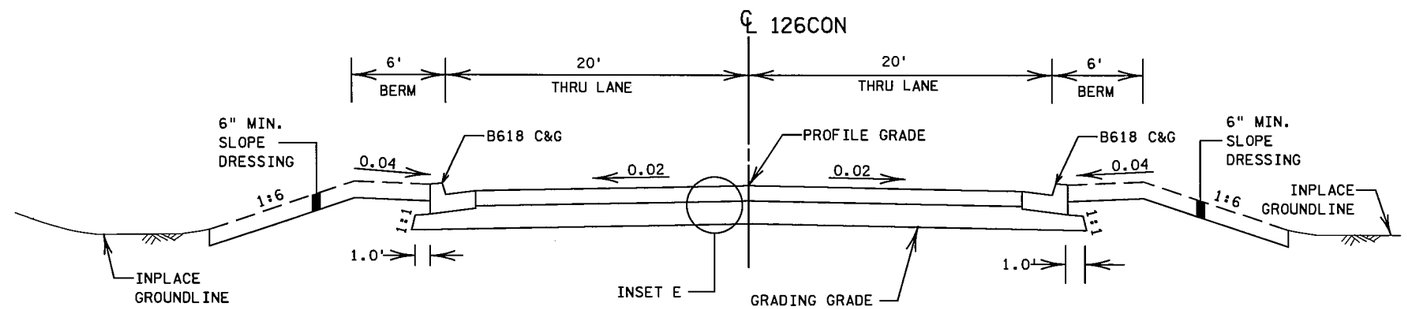

126CON STA. 18+62 TO 22+00

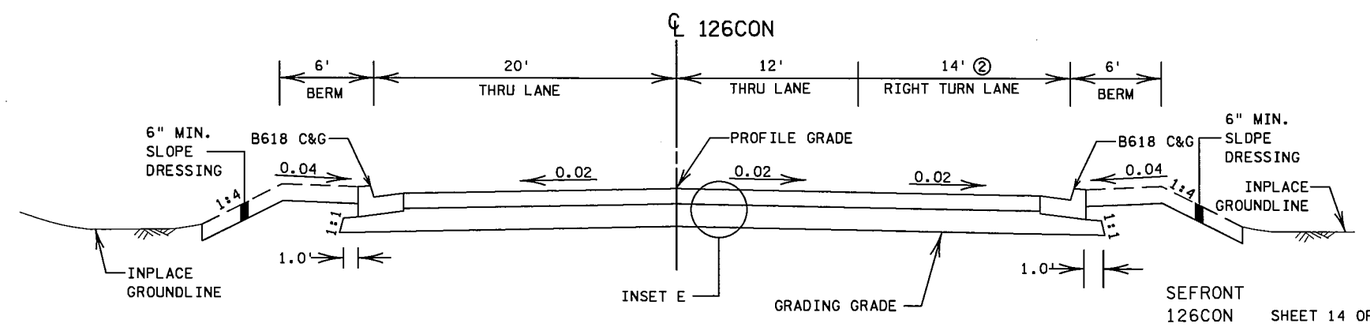

NOTE:

- FOR GENERAL TYPICAL SECTION NOTES, SEE SHEET NO. 69.

① FOR RETAINING WALL NO. 5 DETAILS, SEE SHEET NO. 301 TO 320.

② TAPERS FROM 8' TO 14' STA. 18+62 TO 18+91.

③ SUITABLE GRADING MATERIAL.

④ STAGE 3 EXCAVATION. SEE BYPASS NO. 9 SHEET NO. 88 AND CROSS SECTIONS.

⑤ FOR NOISEWALL NO. 2 DETAILS, SEE SHEET NO. 361 TO 364.

SEFRONT
126CON

S.P. 179-020-031 S.P. 019-605-028

TYPICAL SECTIONS

DRAWN BY: MS	CHECKED BY: HS	CERTIFIED BY LICENSED PROFESSIONAL ENGINEER LIC. NO. 18520 DATE 6/18/12	STATE PROJ. NO. 1901-148 (T.H. 13)	SHEET NO. 82 OF 442 SHEETS

PLOTTED/REVISED: 13-JUN-2012 08:06
DISTRICT #: METRO
IPLOT NAME: d190l148_tsl4
FILENAME: Projects/DM_ROS/013/190l/148/Design/PlanSheets/Typicals/d190l148_tsl.dgn

INSET E

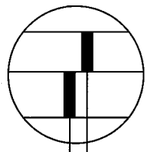

5" TYPE SP 12.5 WEARING COURSE MIXTURE (SPWEB340C)
8" AGGREGATE BASE, CLASS 6

INSET F

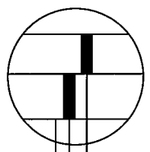

4" TYPE SP 12.5 WEARING COURSE MIXTURE (SPWEB340C)
8" AGGREGATE BASE, CLASS 6
SUBGRADE PREPARATION

126CON STA. 23+00 TO 28+70

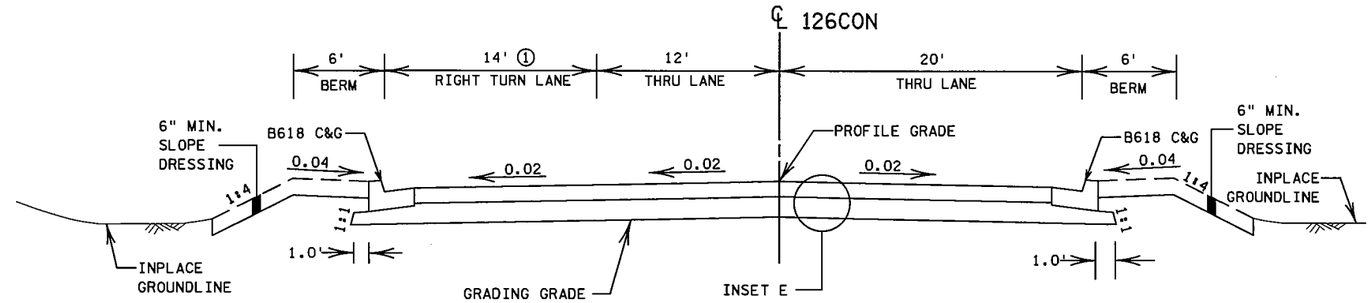

FRONTCON STA. 10+20 TO 11+20

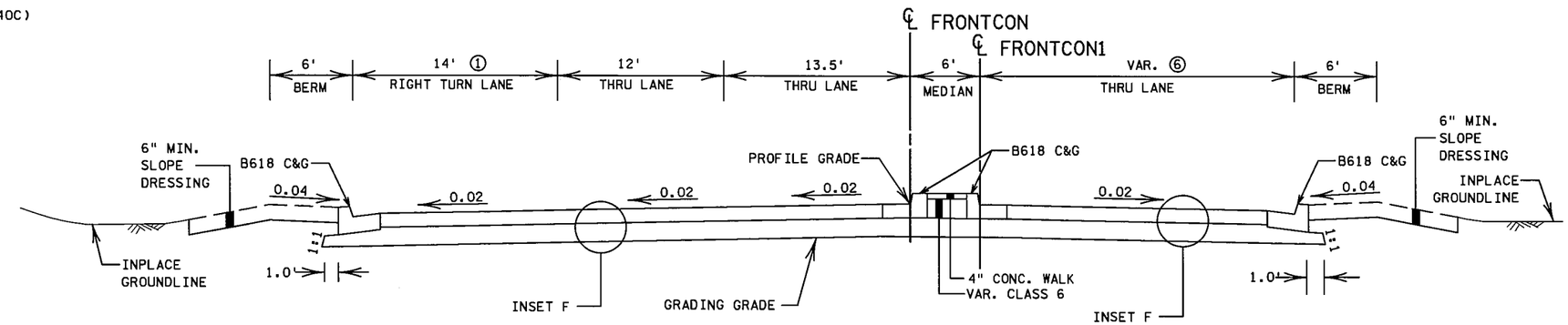

FRONTCON STA. 11+20 TO 15+20 ⑦

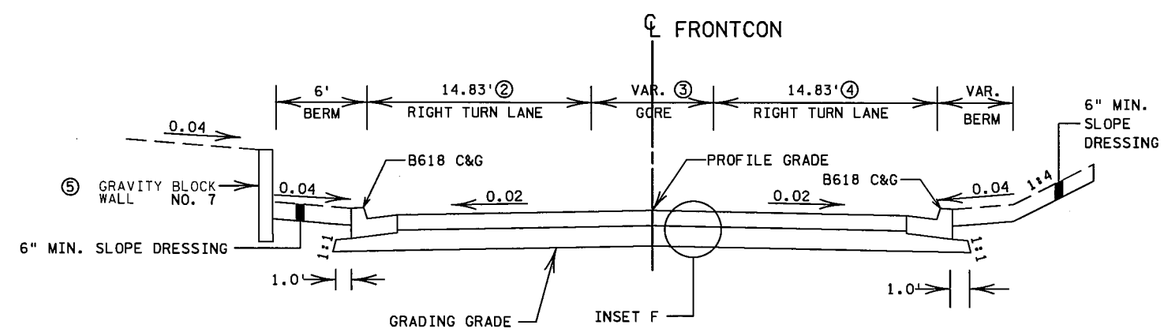

NOTE:
- FOR GENERAL TYPICAL SECTION NOTES, SEE SHEET NO. 69.

① TAPERS FROM 14' TO 8' STA. 25+82 TO 26+72.
② TAPERS FROM 8' TO 0' STA. 11+20 TO 13+02.
③ TAPERS FROM 27.5' TO 14' STA. 11+20 TO 13+64.
④ TAPERS FROM 22' TO 14' STA. 11+20 TO 13+01.
⑤ FOR GRAVITY BLOCK WALL NO. 7 DETAILS, SEE SHEET NO. 348 TO 350.
⑥ SEE CONSTRUCTION PLAN SHEET NO. 212.
⑦ EXTEND CONSTRUCTION AROUND INPLACE RADIUS DUE TO STORM SEWER CONSTRUCTION. SEE DRAINAGE PLAN SHEET NO. 371.

126CON
FRONTCON SHEET 15 OF 21

S.P. 179-020-031 S.P. 019-605-028

TYPICAL SECTIONS

DRAWN BY: MS	CHECKED BY: HS	CERTIFIED BY LICENSED PROFESSIONAL ENGINEER	LIC. NO. 18520 DATE 6/18/12	STATE PROJ. NO. 1901-148 (T.H. 13)	SHEET NO. 83 OF 442 SHEETS

INSET F

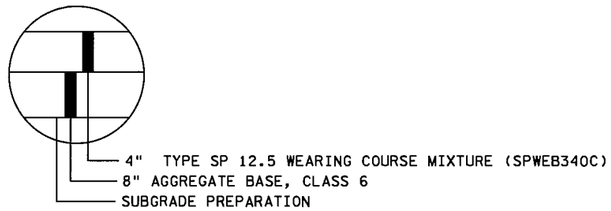

NWFRONT STA. 5+20 TO 6+33

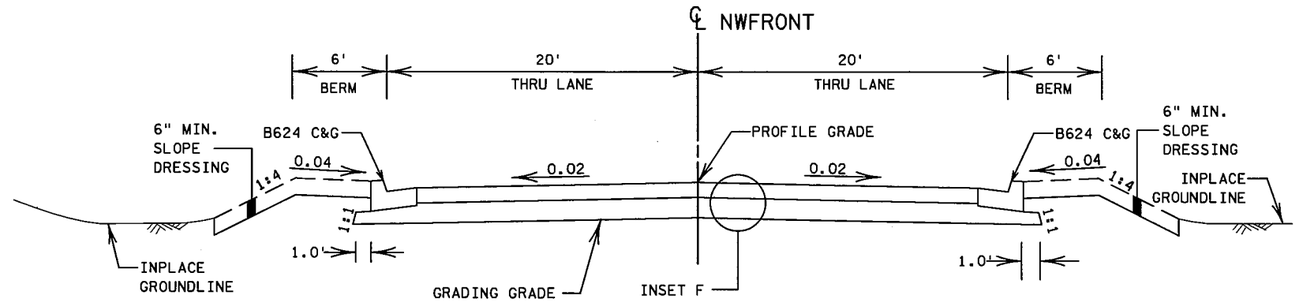

NWFRONT STA. 6+33 TO 7+58 ②

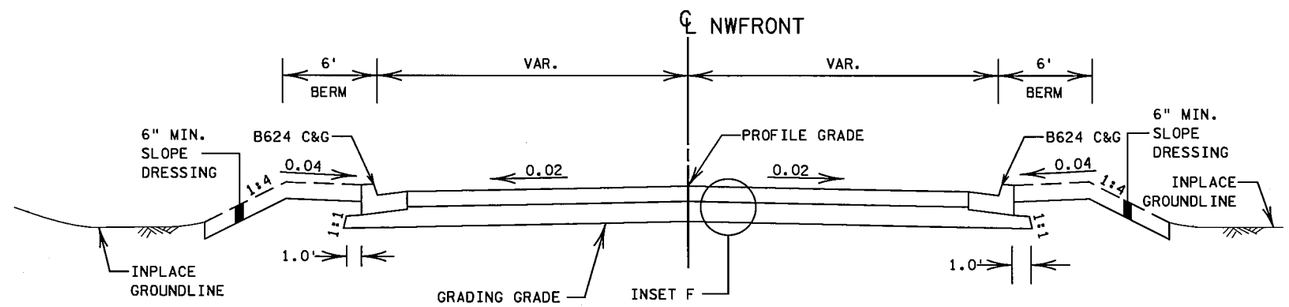

NEFRONT2 STA. 26+73 TO 29+12

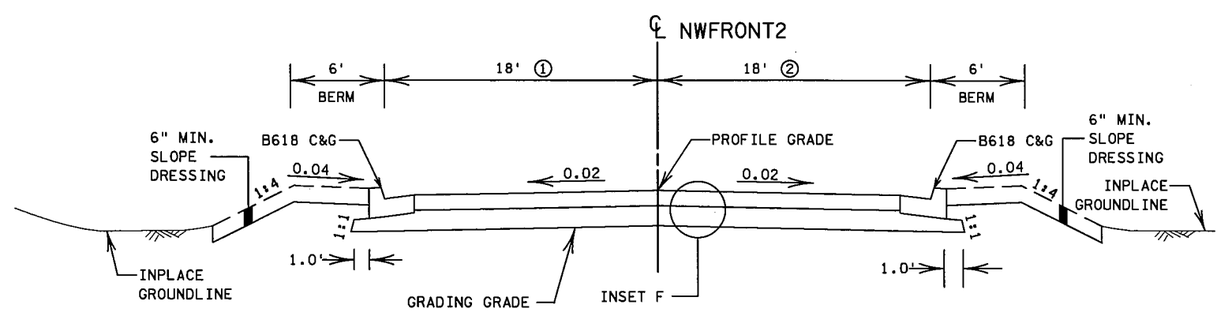

NOTE:

- FOR GENERAL TYPICAL SECTION NOTES, SEE SHEET NO. 69.

① TAPERS FROM 16.6' TO 20.5' STA. 27+70 TO 29+12.

② FOR CUL DE SAC DETAILS, SEE CONSTRUCTION SHEET NO 212.

NWFRONT
NWFRONT2 SHEET 16 OF 21

S.P. 179-020-031 S.P. 019-605-028

TYPICAL SECTIONS

DRAWN BY: MS	CHECKED BY: HS	CERTIFIED BY LICENSED PROFESSIONAL ENGINEER LIC. NO. 18520 DATE 6/18/12	STATE PROJ. NO. 1901-148 (T.H. 13) SHEET NO. 84 OF 442 SHEETS

PLOTTED/REVISED: 13-JUN-2012 08:06
DISTRICT #: METRO
IPLOT NAME: d190l148_tsl15
FILENAME: Projects/DM_ROS/013/1901/148/Design/PlanSheets/Typicals/d190l148_tsldgn

INSET F

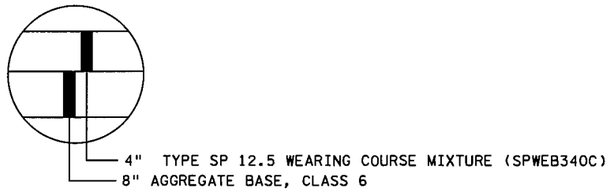

INSET E

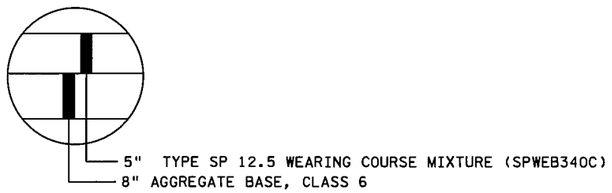

NEFRONT3 STA. 5+34 TO 6+08

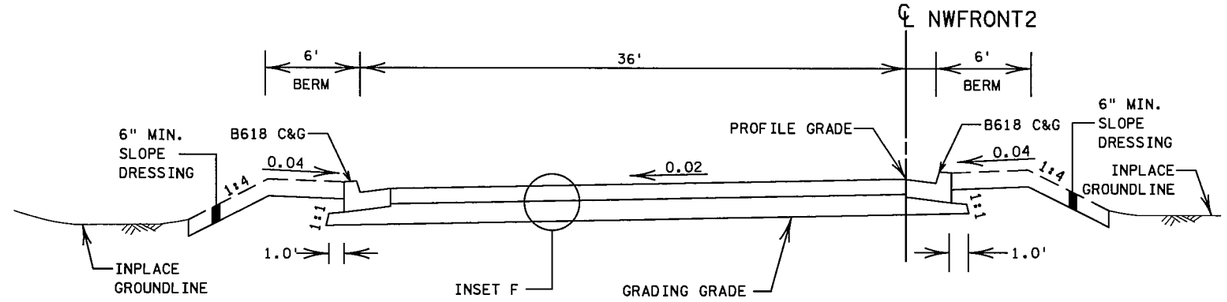

NEFRONT3 STA. 8+00 TO 9+46 ①

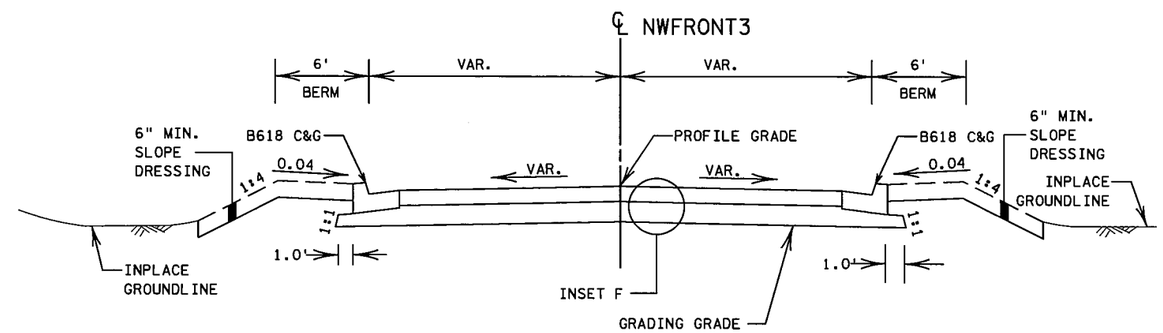

SOUTH FRONTAGE RD TURN LANE AT WASHBURN. ③

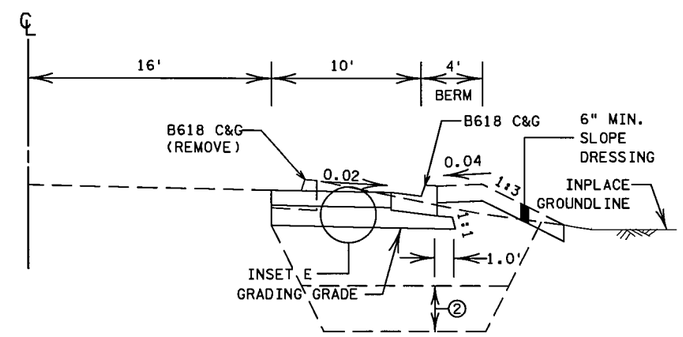

DISRUPTED PARKING LOTS/DRIVEWAYS

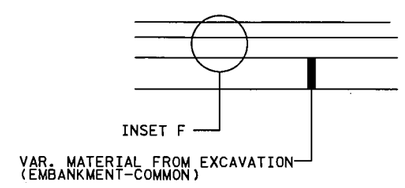

NOTE:

- FOR GENERAL TYPICAL SECTION NOTES, SEE SHEET NO. 69.

① FOR DETAILS, SEE CONSTRUCTION PLAN SHEET NO. 213 TO 214.

② SEE SPECIAL SUBGRADE TREATMENT NO. 4 ON SHEET NO. 88.

③ SEE CONSTRUCTION PLAN SHEET NO. 210.

NEFRONT3 SHEET 17 OF 21

S.P. 179-020-031 S.P. 019-605-028

TYPICAL SECTIONS

DRAWN BY: MS	CHECKED BY: HS	CERTIFIED BY LICENSED PROFESSIONAL ENGINEER LIC. NO. 18520 DATE 6/18/12	STATE PROJ. NO. 1901-148 (T.H. 13)	SHEET NO. 85 OF 442 SHEETS

PLOTTED/REVISED: 13-JUN-2012 08:07
DISTRICT : METRO
IPLOT NAME: d1901148_tsl16
FILENAME: Projects/DM_ROS/013/1901/148/Design/PlanSheets/Typicals/d1901148_1sl.dgn

PLOTTED/REVISED: 13-JUN-2012 08:07
DISTRICT #: METRO
IPLOT NAME: d1901148_tsl7
FILENAME: Projects/DM_ROS/013/1901/148/Design/PlanSheets/Typicals/d1901148_tsl.dgn

INSET F

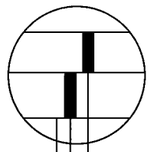

4" TYPE SP 12.5 WEARING COURSE MIXTURE (SPWEB340C)
8" AGGREGATE BASE, CLASS 6
SUBGRADE PREPARATION

VALLEYDR STA. 5+00 TO 6+41

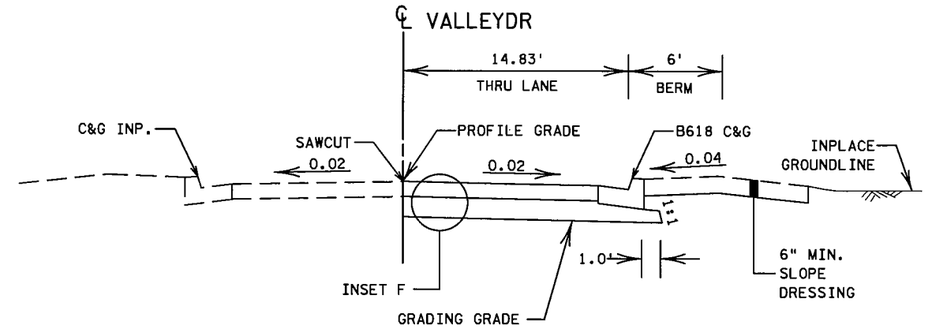

DRIVE1 STA. 10+30 TO 10+85

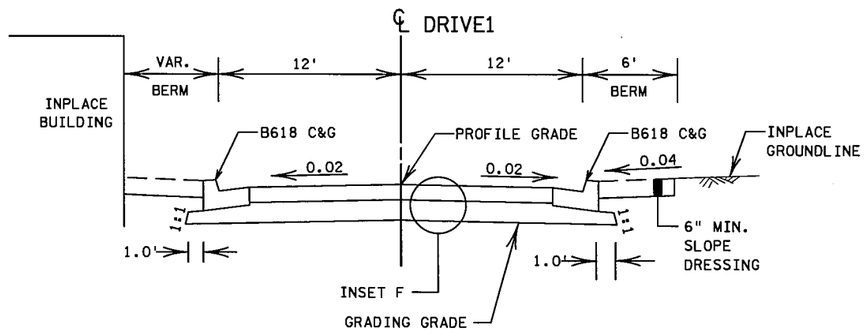

VALLEYDR STA. 6+41 TO 6+74

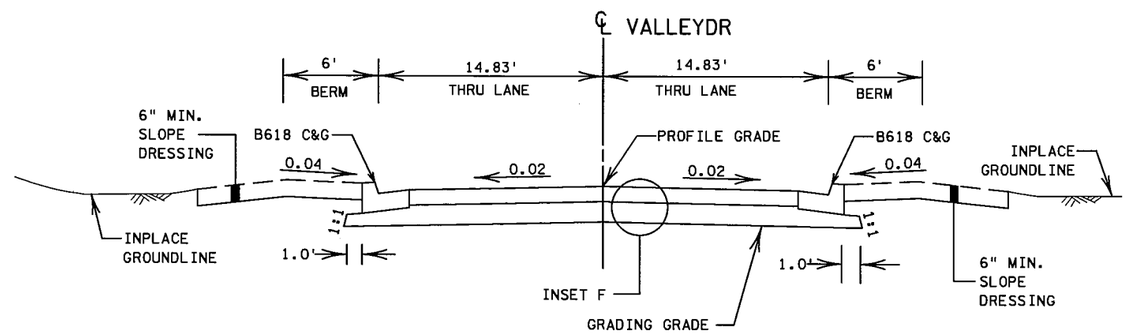

DRIVE2 STA. 10+20 TO 11+40

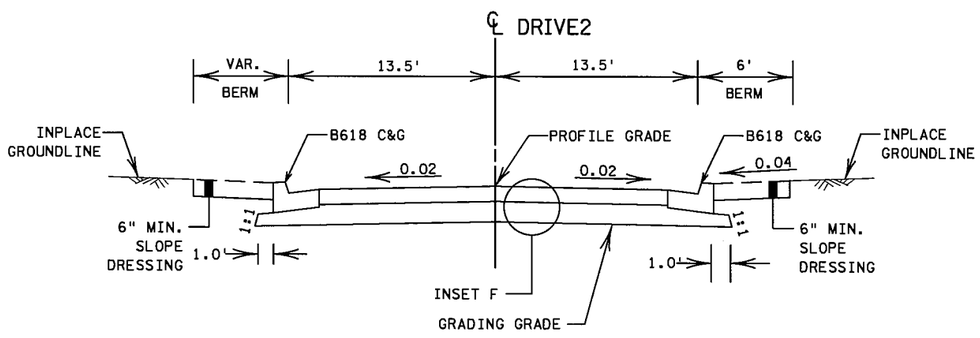

DRIVE1 STA. 10+00 TO 10+30

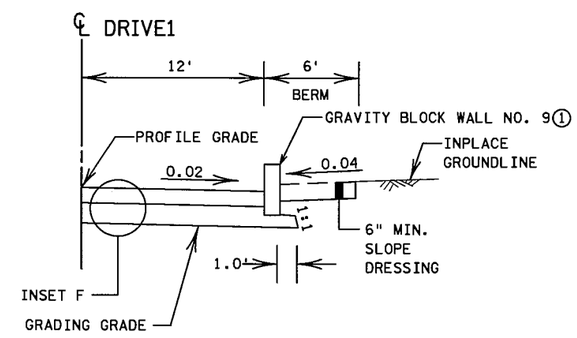

NOTE:
- FOR GENERAL TYPICAL SECTION NOTES, SEE SHEET NO. 69.
① FOR DETAILS, SEE SHEET NO. 353 TO 355.

VALLEYDR
DRIVE1
DRIVE2

SHEET 18 OF 21

S.P. 179-020-031 S.P. 019-605-028

TYPICAL SECTIONS

DRAWN BY: MS	CHECKED BY: HS	CERTIFIED BY _____ LICENSED PROFESSIONAL ENGINEER	LIC. NO. 18520 DATE 6/18/12	STATE PROJ. NO. 1901-148 (T.H. 13)	SHEET NO. 86 OF 442 SHEETS

EXCAVATION TYPICAL ④

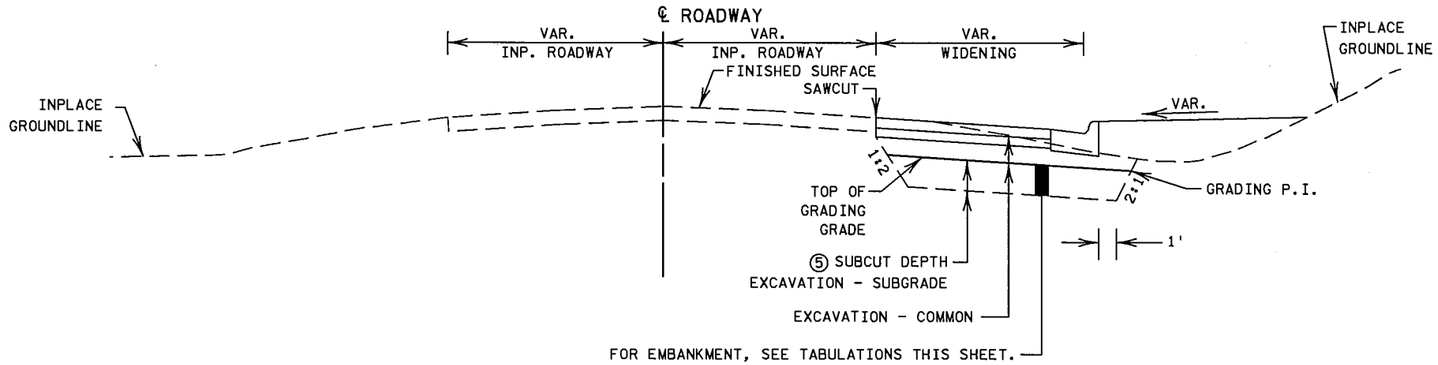

EXCAVATION TYPICAL

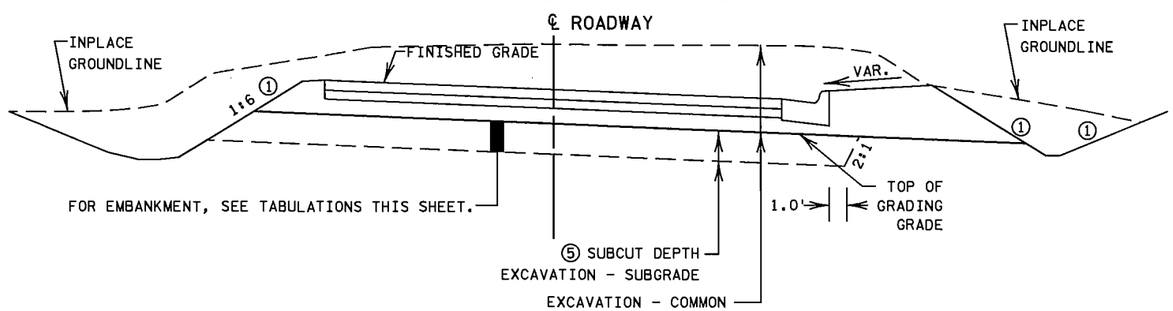

EMBANKMENT TYPICAL

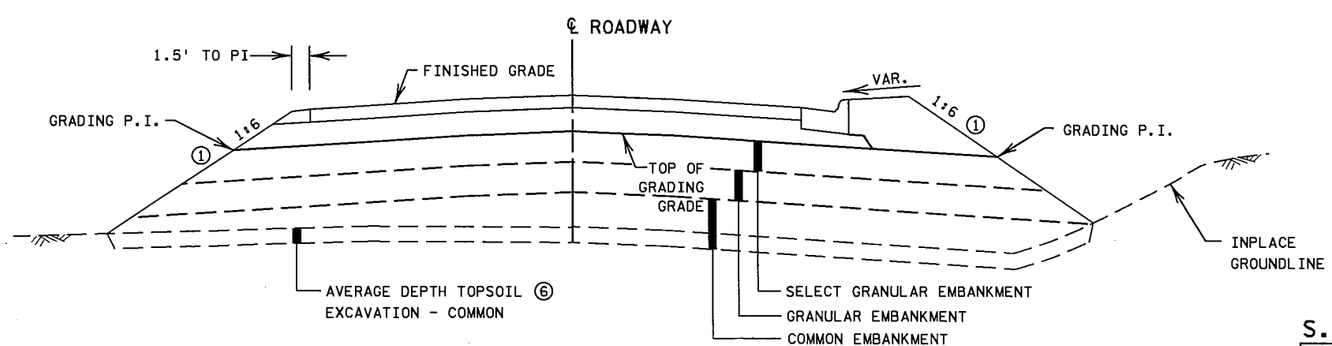

SUBGRADE CORRECTIONS AND SUBCUTS ②

ROADWAY ALIGNMENT	STATION TO STATION ③	LOC.	DEPTH FT	EMBANKMENT
13EB	670+80 TO 688+50	CL	4.0	A
13EB	688+50 TO 692+50	CL	4.0	E
13EB	692+50 TO 732+47	CL	4.0	A
13WB	665+44 TO 688+00	CL	4.0	A
13WB	688+00 TO 692+50	CL	4.0	E
13WB	692+50 TO 732+48	CL	4.0	A
NBCSAH5	103+40 TO 111+83	CL	2.0	D
NBCSAH5	113+43 TO 125+99	CL	2.0	D
SBCSAH5	103+40 TO 111+95	CL	2.0	D
SBCSAH5	113+60 TO 126+11	CL	2.0	D
126CON	11+80 TO 22+24	CL	1.5	B
126CON	22+70 TO 28+40	CL	1.5	B
WBWIL	40+52 TO 45+59	CL	2.0	D
EBWIL	40+51 TO 45+55	CL	2.0	D
DRIVE1	10+10 TO 11+00 ⑦	CL	1.0	C
NWRAMP	70+00 TO 78+73	CL	4.0	A
NWLOOP1	81+17 TO 87+48	CL	4.0	A
SWRAMP	50+00 TO 58+96	CL	4.0	A
SERAMP	60+00 TO 68+56	CL	4.0	A
NWFRONT	5+00 TO 7+36	CL	1.0	C
NWLOOP2	84+00 TO 87+35	CL	4.0	A
NEFRONT3	8+04 TO 9+15 ⑦	CL	1.0	C
SEFRONT	30+00 TO 32+50	CL	1.0	C
SEFRONT	38+00 TO 42+80	CL	1.0	C
SEFRONT	53+20 TO 58+00	CL	1.0	C
FRONTCON	10+00 TO 15+00	CL	1.0	C
FRONTCON1	10+00 TO 12+81	CL	1.0	C
BYPASS 1,2,3,4,5,6,9	⑧	CL	4.0	A
SOUTH FR RD TURN LANE	AT WASHBURN	RT	⑨	⑨
DRIVE 2	10+20 TO 10+65	CL	1.0	C
DRIVE 2	11+15 TO 11+30	CL	1.0	C

A = 12" SELECT GRANULAR OVER 36" GRANULAR EMBANKMENT.
B = 18" SELECT GRANULAR EMBANKMENT.
C = 12" SELECT GRANULAR EMBANKMENT.
D = 24" SELECT GRANULAR EMBANKMENT.
E = 48" SELECT GRANULAR EMBANKMENT.

NOTE:
FOR GENERAL TYPICAL SECTIONS NOTES, SEE SHEET NO. 69.

① SEE CROSS SECTIONS FOR APPROPRIATE SLOPE RATIO.

② PROVIDE FOR SUBCUTS AS LISTED IN THIS TABULATION.
FOR ADDITIONAL INFORMATION, SEE PROFILE SHEET NO. 242 TO 252.
SEE SPECIAL SUBGRADE TREATMENTS INDENTIFIED AS MUCK EXCAVATION ON SHEET NO. 88.
FOR ALL ROADWAYS THAT DO NOT HAVE A SUBCUT, PROVIDE FOR SUBGRADE PREPARATION.

③ PROVIDE 1:20 TAPERS TO STATION LIMITS SHOWN.

④ ADJACENT TO INPLACE ROADWAYS.

⑤ SEE TABULATION, THIS SHEET.

⑥ INPLACE TOPSOIL DEPTH RANGE FROM 3" TO 3'.
FOR COMPUTATION PURPOSES USE 6" AVERAGE DEPTH.

⑦ PROVIDE A 1:10 TAPER TO STATION LIMITS SHOWN.

⑧ SEE TYPICAL SECTIONS ON SHEET NO. 88.

⑨ SEE TREATMENT NO. 4 ON SHEET NO. 88.

EXCAVATION
EMBANKMENT

SHEET 19 OF 21

S.P. 179-020-031 S.P. 019-605-028

TYPICAL SECTIONS

DRAWN BY: MS | CHECKED BY: HS | CERTIFIED BY _____ LICENSED PROFESSIONAL ENGINEER LIC. NO. 20534 DATE 7/26/12

STATE PROJ. NO. 1901-148 (T.H. 13) SHEET NO. 87 OF 442 SHEETS

PLOTTED/REVISED: 26-JUL-2012 14:58
DISTRICT #: METRO
IPLOT NAME: d190l148_tsl9
PATH & FILENAME: Projects/DM_ROS/013/1901/148/Design/PlanSheets/Typicals/d190l148_tsl.dgn

INSET G

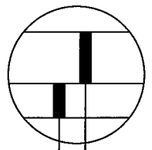

6" TYPE SP 12.5 WEARING COURSE MIXTURE (SPWEB540F)
4" AGGREGATE BASE, CLASS 6

NOTE:
FOR GENERAL TYPICAL SECTIONS NOTES, SEE SHEET NO. 69.

① TEMPORARY EROSION CONTROL MEASURES SHALL BE PLACED AND MAINTAINED FOR THE ENTIRE DURATION OF THIS SLOPE. FOR DETAILS, SEE SHEET NO. 439.

BYPASS NO. 1,2,3 & 4

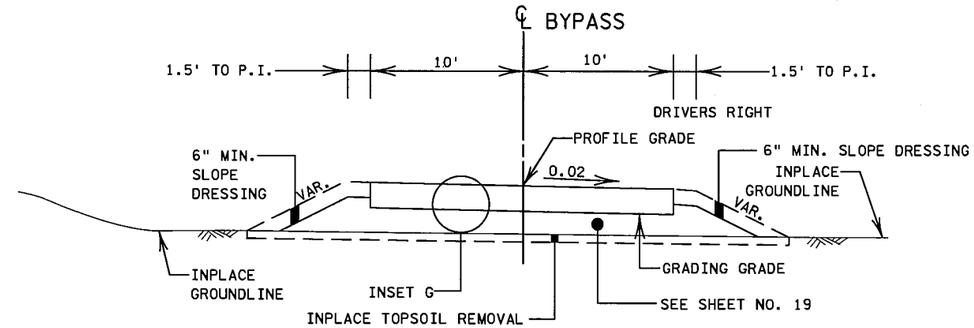

BYPASS NO. 5 & 6

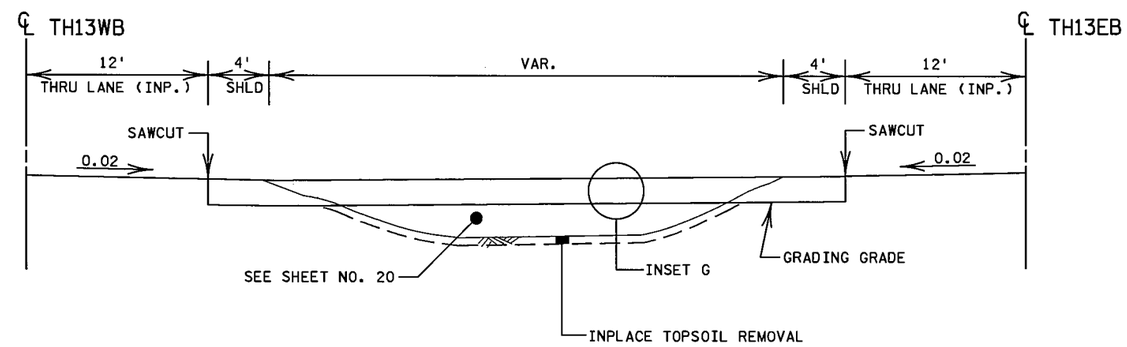

BYPASS NO. 9 TH13EB STA. 695+00 TO 705+00 - STAGE 2 CONST.

STAGE 3 TRAFFIC

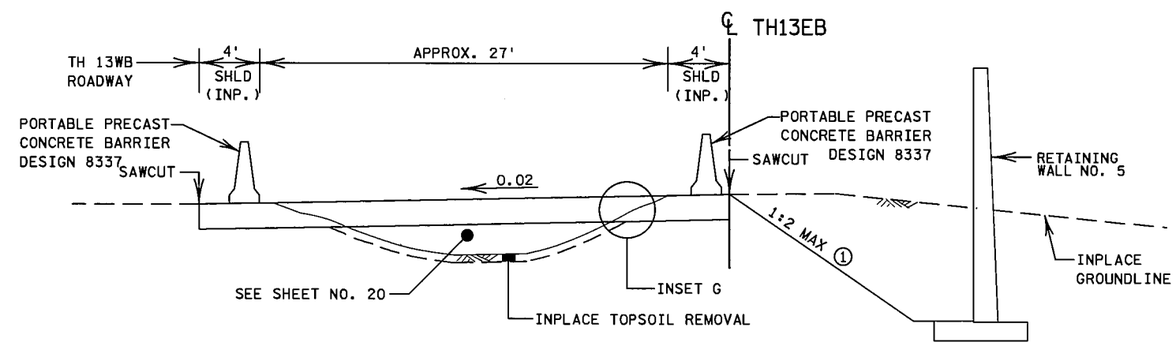

Special Subgrade Treatments

ALIGNMENT	ROADWAY	STA. TO STA.	UNSTABLE BOTTOM ELEVATION	UNSTABEL MATERIAL TYPE	TREATMENT
13EB	WB 13	680+50 - 681+50	743	SILT LOAM HIGHLY ORGANIC	*1
13EB	EB 13	680+00 - 681+50	743	LOAM & CLAY LOAM HIGHLY ORGANIC	*1
126CON	126TH	13+50 - 15+50	730.5	SILT LOAM ORGANIC	*2
SEFRONT	FRONTAGE RD. S.	50+50 - 53+00	-	SILT LOAM ORGANIC	*3
	WASHBURN TURN LANE		-	SILT LOAM ORGANIC TO HIGHLY ORGANIC	*4

*Provide for the following treatments listed in the above table for the removal of known Organic and Highly Organic soils in various roadway segments. Paid for as muck excavation

Treatment #1 Remove unstable materials to a firm bottom as shown in the plans. Backfill with Select Grading Material below a subgrade treatment of 36" of Granular Material and 12" of Select Granular Material.

Treatment #2 Remove unstable materials to the bottom as shown in the plans. Provide a Type V Geotextile Fabric and backfill with Select Grading Material below a subgrade treatment of 24" of Select Granular Material.

Treatment #3 Provide for a 24" subcut. Backfill with Select Granular Material over a Type V Geotextile Fabric.

Treatment #4 Remove a 2' strata of organic & highly organic soils 48" to 72" below the grading grade. Backfill with 24" of select grading material below and 36" of granular with Pavement Inset E.

BYPASS NO. 1,2,3,4,5,6, & 9

S.P. 179-020-031 S.P. 019-605-028

SHEET 20 OF 21

TYPICAL SECTIONS

DRAWN BY: MS | CHECKED BY: HS | CERTIFIED BY _____ LICENSED PROFESSIONAL ENGINEER | LIC. NO. 18520 DATE 6/18/12 | STATE PROJ. NO. 1901-148 (T.H. 13) | SHEET NO. 88 OF 442 SHEETS

PLOTTED/REVISED: 13-JUN-2012 08:07
DISTRICT #: METRO
IPLOT NAME: d1901148_tsl19
FILENAME: Projects/DM_ROS/013/1901/148/Design/PlanSheets/Typicals/d1901148_tsl.dgn

PLOTTED/REVISED: 13-JUN-2012 08:07
DISTRICT #: METRO
PLOT NAME: d1901148_tsl20
FILENAME: Projects/DM_ROS/013/1901/148/Design/PlanSheets/Typicals/d1901148_tsl.dgn

INSET G

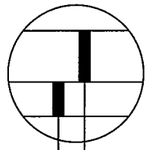

6" TYPE SP 12.5 WEARING COURSE MIXTURE (SPWEB540F)
4" AGGREGATE BASE, CLASS 6

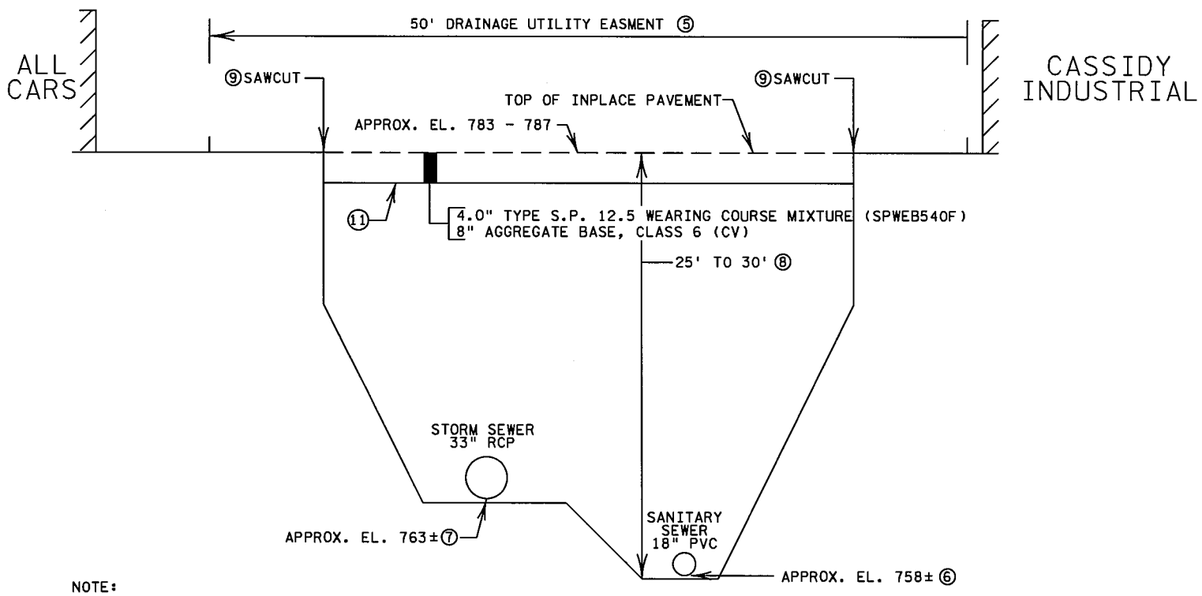

NOTE:
FOR GENERAL TYPICAL SECTIONS NOTES, SEE SHEET NO. 69.

① WIDTHS MAY BE VARIABLE IN THE FIELD. PROVIDE FOR 26' TOTAL WIDTH WHEN COMPLETED.

② PORTABLE PRECAST CONCRETE BARRIER, DESIGN 8337.

③ TEMPORARY EROSION CONTROL MEASURES SHALL BE PLACED AND MAINTAINED FOR THE ENTIRE DURATION OF THIS SLOPE. FOR DETAILS, SEE SHEET NO. 440 TO 441.

④ FOR LOCATION, SEE SHEET NO. 202 TO 204.

⑤ FOR ADDITIONAL INFORMATION, SEE MISCELLANEOUS DETAIL SHEET NO. 92.

⑥ FOR PROFILE, SEE SHEET NO. U21.

⑦ FOR PROFILE, SEE SHEET NO. 392.

⑧ THE CONTRACTOR WILL NEED TO DETERMINE A METHOD FOR CONSTRUCTING THESE TWO SEWER LINES, WHICH SHALL BE APPROVED BY THE ENGINEER.

⑨ EXACT LOCATION TO BE DETERMINED IN THE FIELD.

⑩ T.H. 13 E.B. CONSTRUCTION.

⑪ THE REMOVALS AND BACKFILL QUANTITIES BELOW THIS LINE ARE CONSIDERED PART OF THE SEWER PIPE CONSTRUCTION.

TH13WB OUTSIDE SHOULDER RECONSTRUCTION
STAGE 3 ④

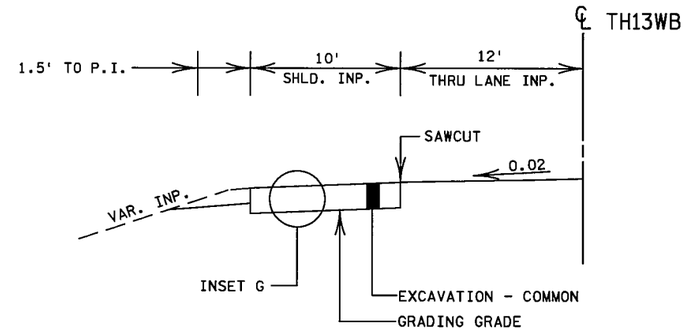

BYPASS NO.7
LEFT 13WB STA. 709+50 TO 718+50

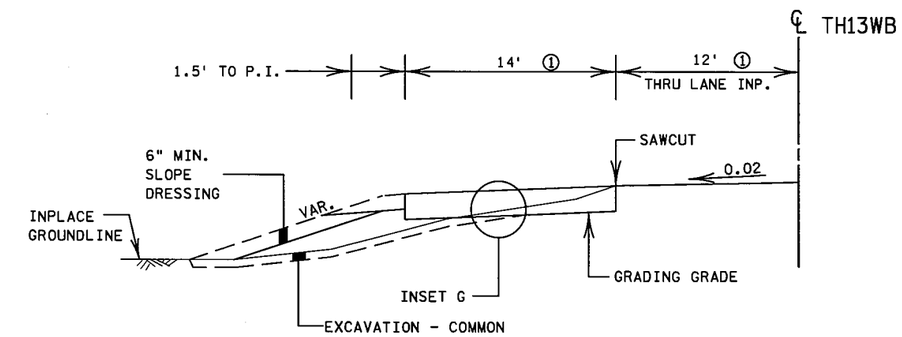

BYPASS NO.8 - STAGE 3 CONSTRUCTION
LEFT 13WB STA. 688+00 TO 699+50 (STAGE 4 TRAFFIC)

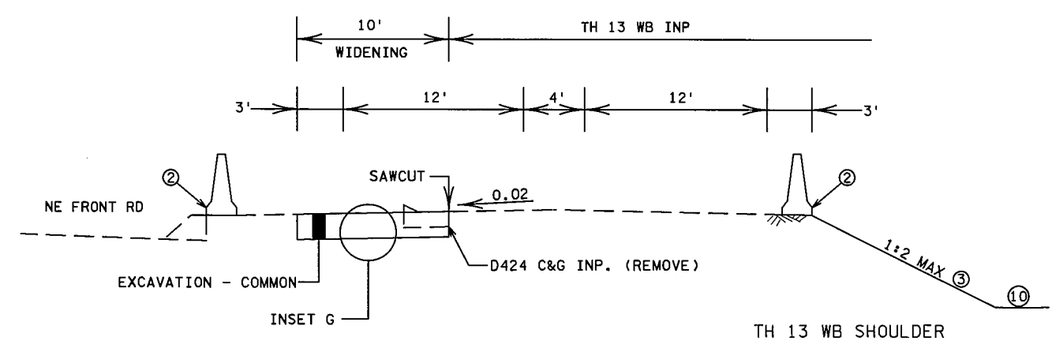

TH 13 WB SHOULDER
BYPASS NO. 7 & 8 SHEET 21 OF 21

S.P. 179-020-031 S.P. 019-605-028

TYPICAL SECTIONS

DRAWN BY: MS	CHECKED BY: HS	CERTIFIED BY [signature] LICENSED PROFESSIONAL ENGINEER LIC. NO. 18520 DATE 6/18/12	STATE PROJ. NO. 1901-148 (T.H. 13) SHEET NO. 89 OF 442 SHEETS

PLOTTED/REVISED: 14-JUN-2012 10:06
DISTRICT #: METRO
IPLOT NAME: d1901148_CONTAMREMOVAL
PATH & FILENAME: Projects/DM_ROS/013/1901/148/Design/PlanSheets/d1901148_CONTAMREMOVAL.dgn

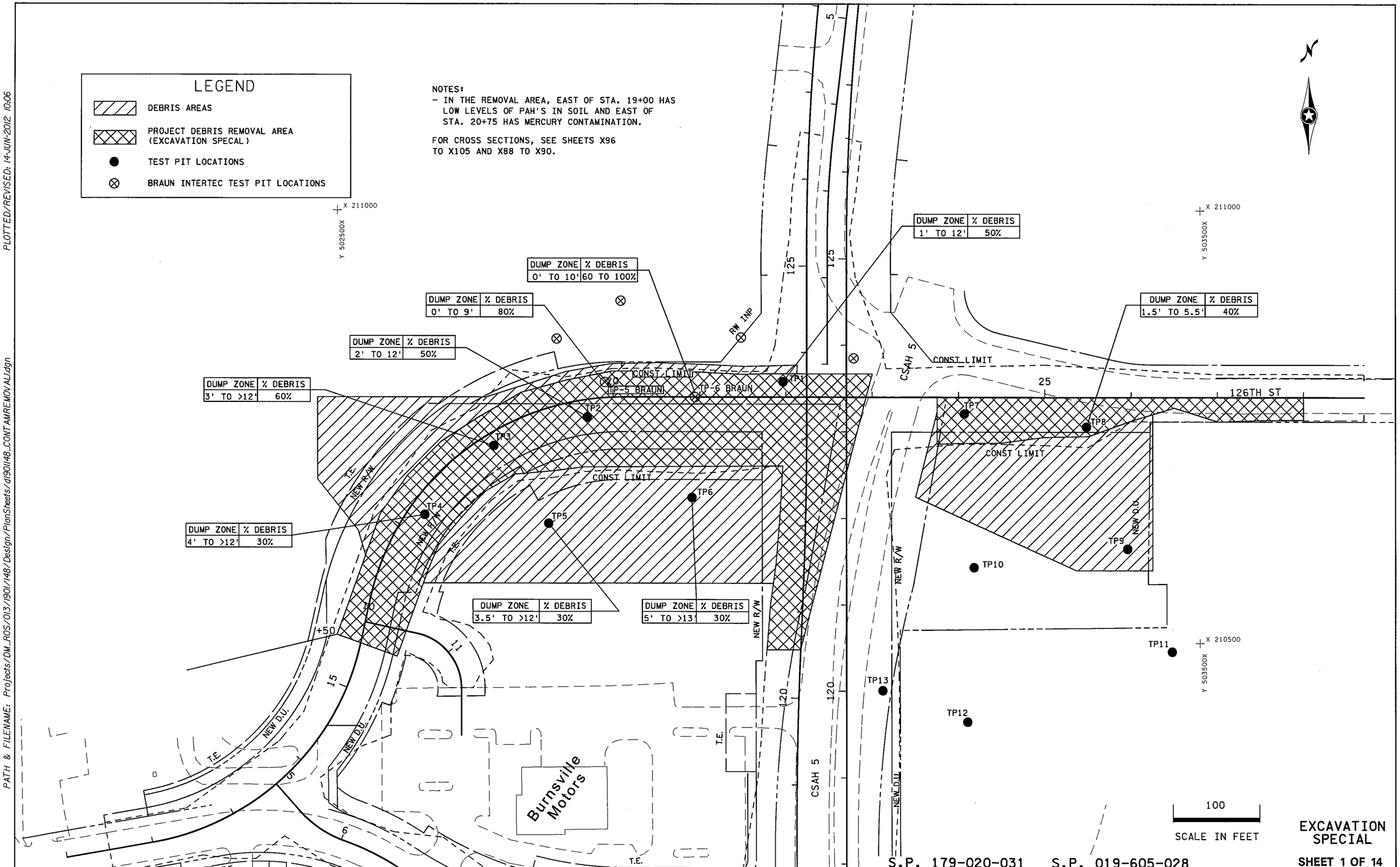

EXCAVATION SPECIAL

S.P. 179-020-031 S.P. 019-605-028

SHEET 1 OF 14

MISCELLANEOUS DETAILS

DRAWN BY: GLJ	CHECKED BY: HS	CERTIFIED BY LICENSED PROFESSIONAL ENGINEER	LIC. NO. 18520 DATE 6/18/12	STATE PROJ. NO. 1901-148 (T.H. 13)	SHEET NO. 90 OF 442 SHEETS

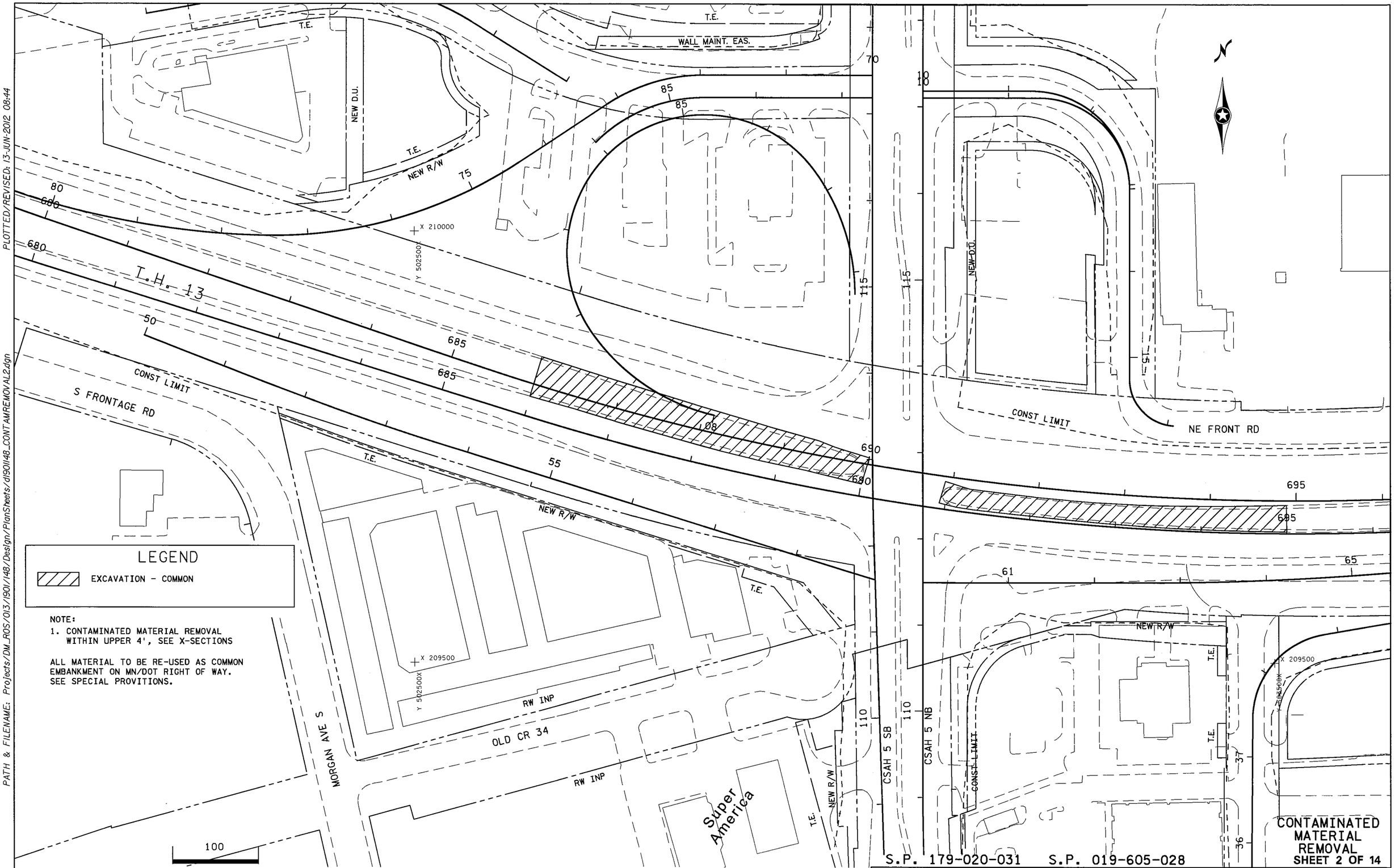

PLOTTED/REVISED: 13-JUN-2012 08:44

DISTRICT #: METRO
IPLOT NAME: d1901148_CONTAMREMOVAL2
PATH & FILENAME: Projects/DM_ROS/013/1901/148/Design/PlanSheets/d1901148_CONTAMREMOVAL2.dgn

MISCELLANEOUS DETAILS

DRAWN BY: MS	CHECKED BY: HS	CERTIFIED BY [signature] LICENSED PROFESSIONAL ENGINEER	LIC. NO. 18520	DATE 6/18/12	STATE PROJ. NO. 1901-148 (T.H. 13)	SHEET NO. 91 OF 442 SHEETS

MISCELLANEOUS DRIVEWAY ITEMS (INTERCHANGE FUNDS) — X

SALVAGE			REMOVE				INSTALL								
CHAIN LINK FENCE	VEHICULAR GATE	CONCRETE BLOCK RETAINING WALL	BITUMINOUS PAVEMENT	CONCRETE CURB	CURB & GUTTER	CONCRETE DRIVEWAY PAVEMENT	VEHICULAR GATE	CHAIN LINK FENCE	SAWING BITUMINOUS PAVEMENT FULL DEPTH	CONCRETE CURB DESIGN B6	B618 CURB & GUTTER	8" AGGREGATE BASE CLASS 6 (CV)	6" CONCRETE DRIVEWAY PAVEMENT	TYPE SP 12.5 WEARING COURSE MIXTURE (3,C) (4" THICK)	RECONSTRUCT RETAINING WALL ⑥
LIN FT	EACH	SQ FT	SQ YD	LIN FT	LIN FT	SQ YD	EACH	LIN FT	LIN FT	LIN FT	LIN FT	CU YD	SQ YD	TON	SQ YD
75	1	725	830	350	80	28	1	75	400	310	80	625	28	212	80

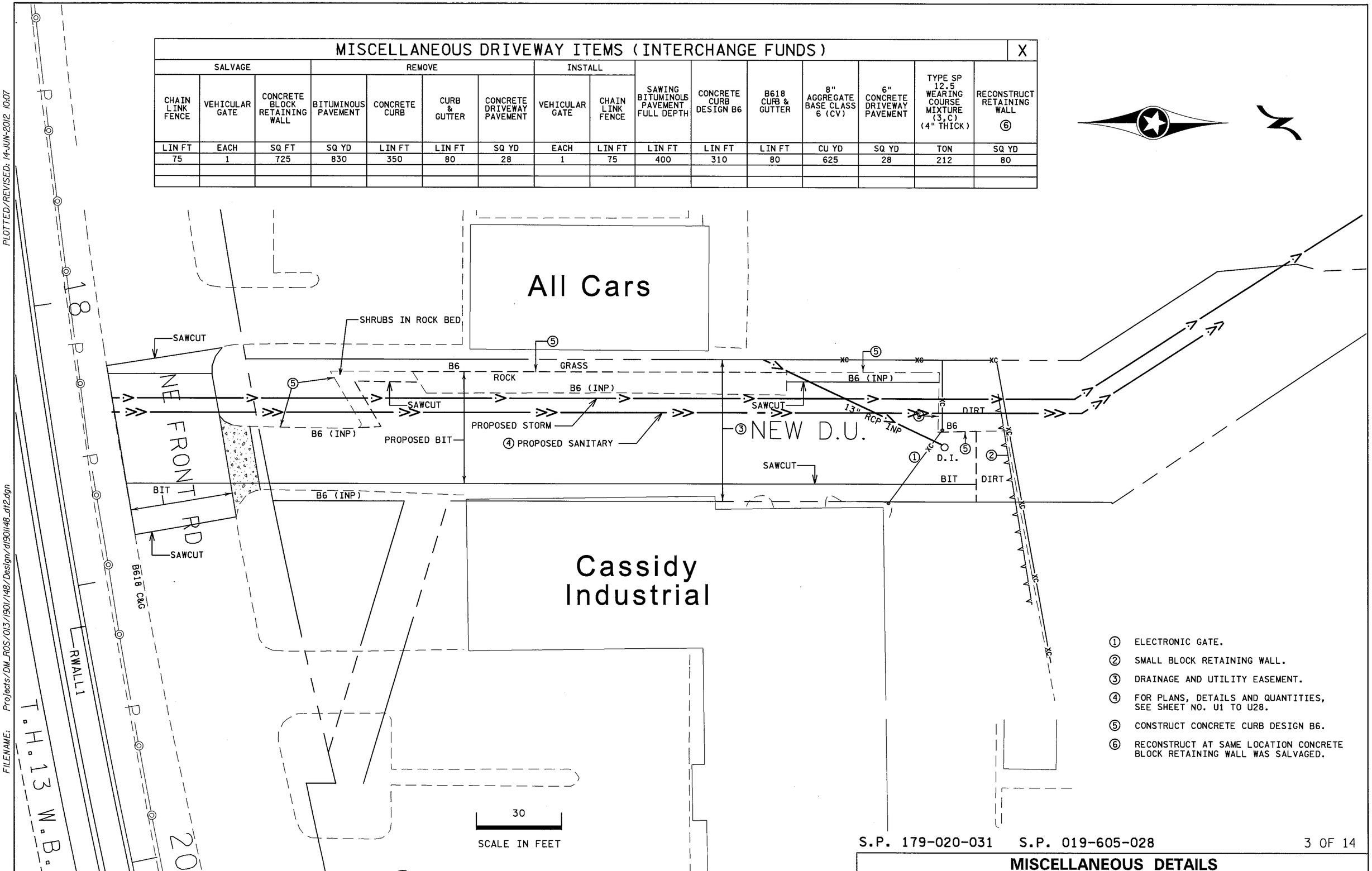

① ELECTRONIC GATE.
② SMALL BLOCK RETAINING WALL.
③ DRAINAGE AND UTILITY EASEMENT.
④ FOR PLANS, DETAILS AND QUANTITIES, SEE SHEET NO. U1 TO U28.
⑤ CONSTRUCT CONCRETE CURB DESIGN B6.
⑥ RECONSTRUCT AT SAME LOCATION CONCRETE BLOCK RETAINING WALL WAS SALVAGED.

S.P. 179-020-031 S.P. 019-605-028

MISCELLANEOUS DETAILS

DRAWN BY: GJ | CHECKED BY: HS | CERTIFIED BY ____ LICENSED PROFESSIONAL ENGINEER | LIC. NO. 18520 DATE 6/18/12

STATE PROJ. NO. 1901-148 (T.H. 13) SHEET NO. 92 OF 442 SHEETS

PLOTTED/REVISED: 14-JUN-2012 10:07
DISTRICT #: METRO
IPLOT NAME: d1901148_dt2
FILENAME: Projects/DM_ROS/013/1901/148/Design/d1901148_dt2.dgn

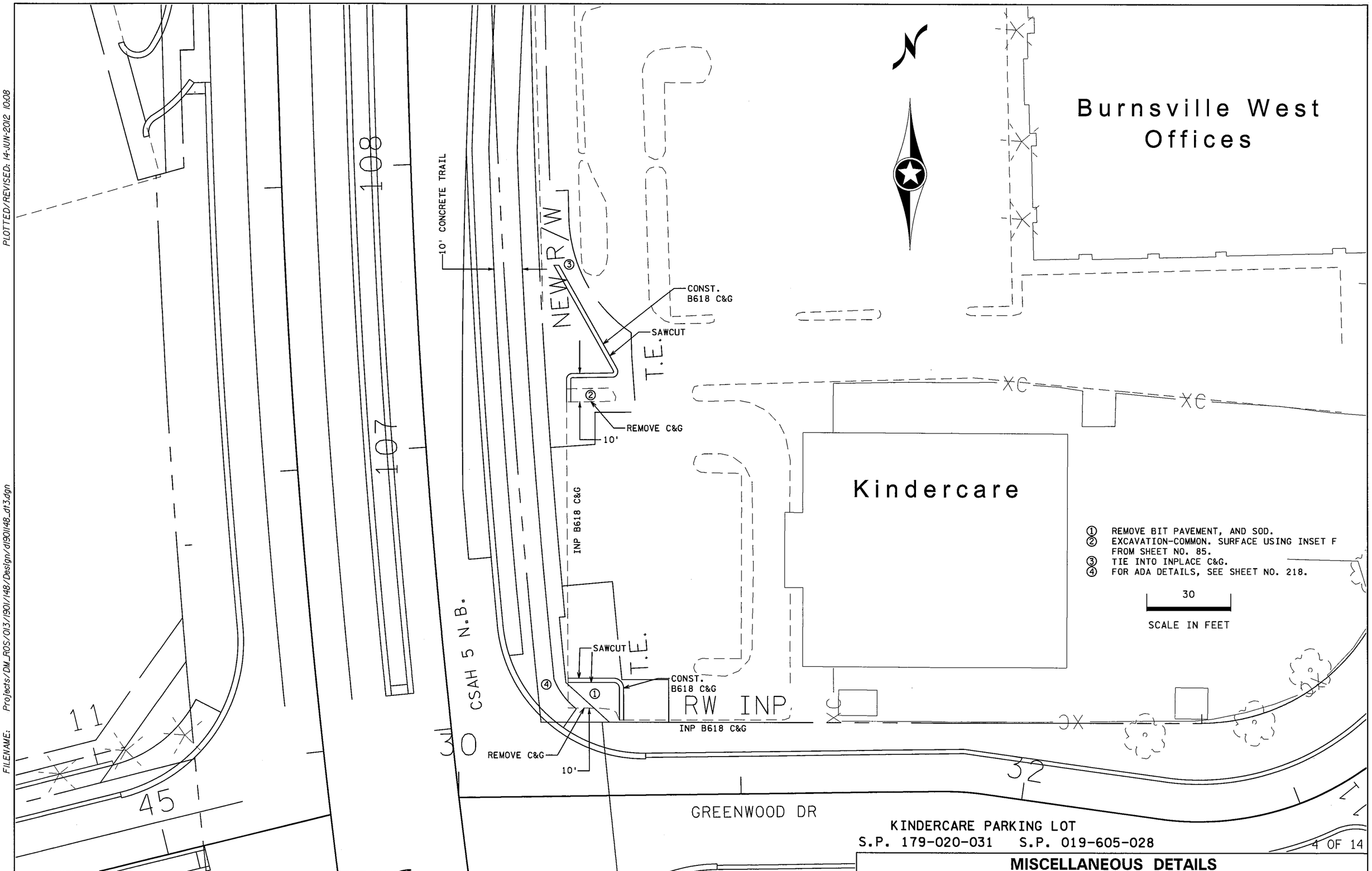

KINDERCARE PARKING LOT
S.P. 179-020-031 S.P. 019-605-028

4 OF 14

MISCELLANEOUS DETAILS

DRAWN BY: GJ	CHECKED BY: HS	CERTIFIED BY _____ LICENSED PROFESSIONAL ENGINEER	LIC. NO. _____ DATE _____	STATE PROJ. NO. 1901-148 (T.H. 13) SHEET NO. 93 OF 442 SHEETS

PLOTTED/REVISED: 14-JUN-2012 10:08

DISTRICT #: METRO
IPLOT NAME: d1901148_dt3
FILENAME: Projects/DM_ROS/013/1901/148/Design/d1901148_dt3.dgn

VISTA VIEW APARTMENTS

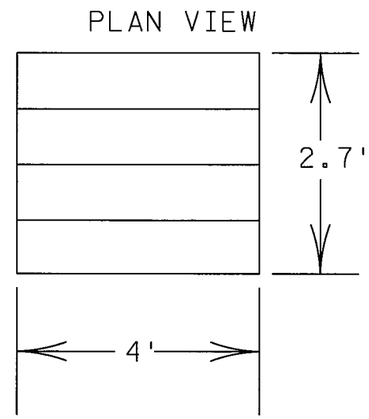

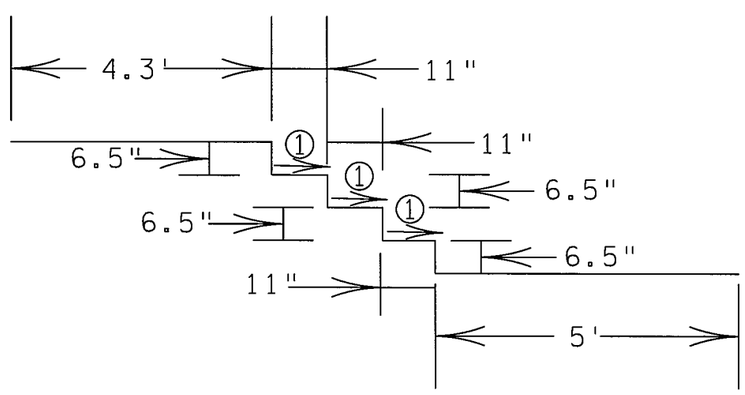

① 1.0% GRADE

② CONSTRUCT PIPE RAILING AS PER STANDARD PLATE 8400.

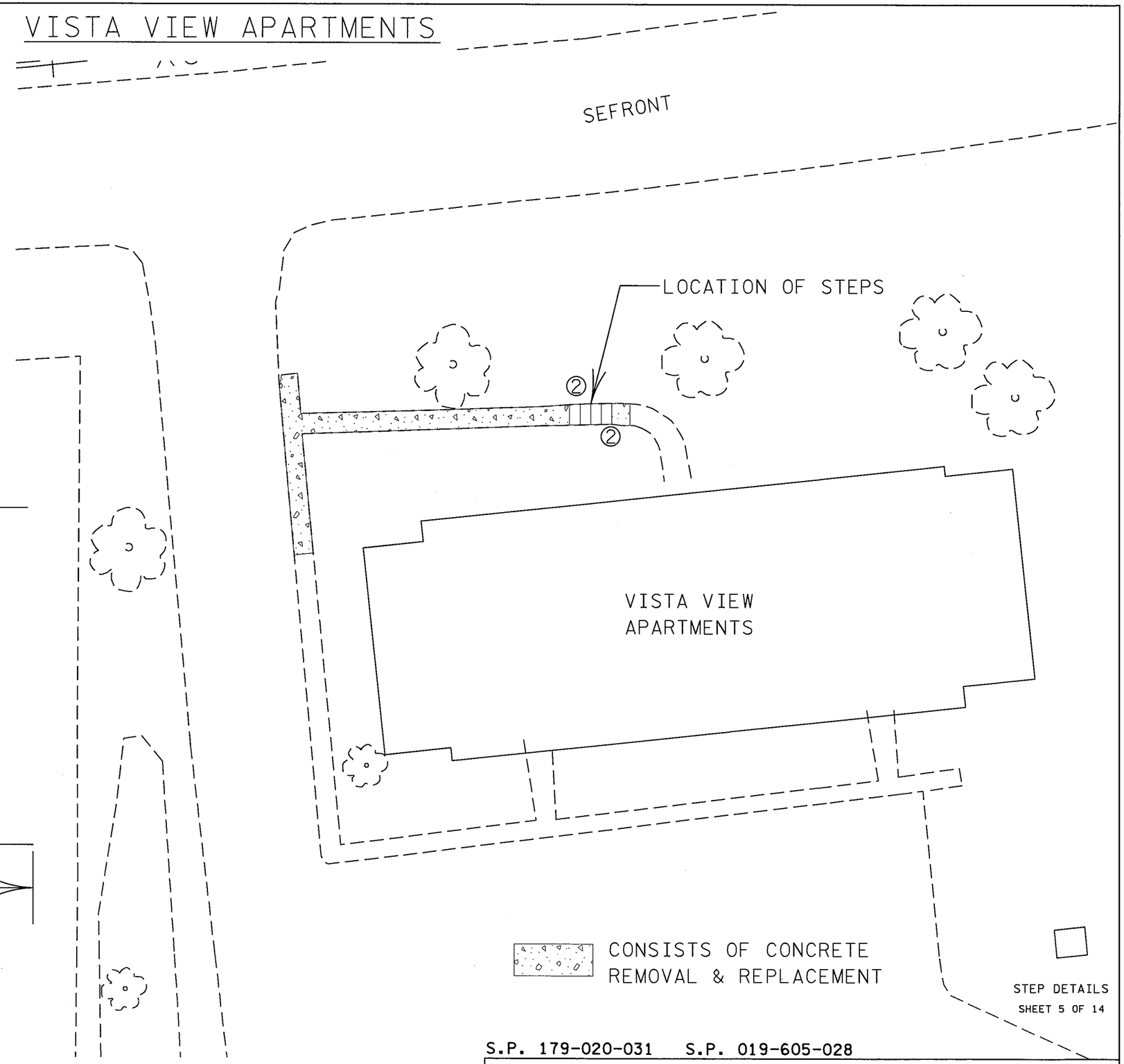

STEP DETAILS
SHEET 5 OF 14

S.P. 179-020-031 S.P. 019-605-028

MISCELLANEOUS DETAILS

DRAWN BY: MS	CHECKED BY: HS	CERTIFIED BY LICENSED PROFESSIONAL ENGINEER LIC. NO. 18520 DATE 6/18/12	STATE PROJ. NO. 1901-148 (T.H. 13)	SHEET NO. 94 OF 442 SHEETS

PLOTTED/REVISED: 13-JUN-2012 08:43
DISTRICT *: METRO
IPLOT NAME: d1901148_Steps Detail
FILENAME: Projects/DM_ROS/013/1901/148/Design/PlanSheets/d1901148_Steps Detail.dgn

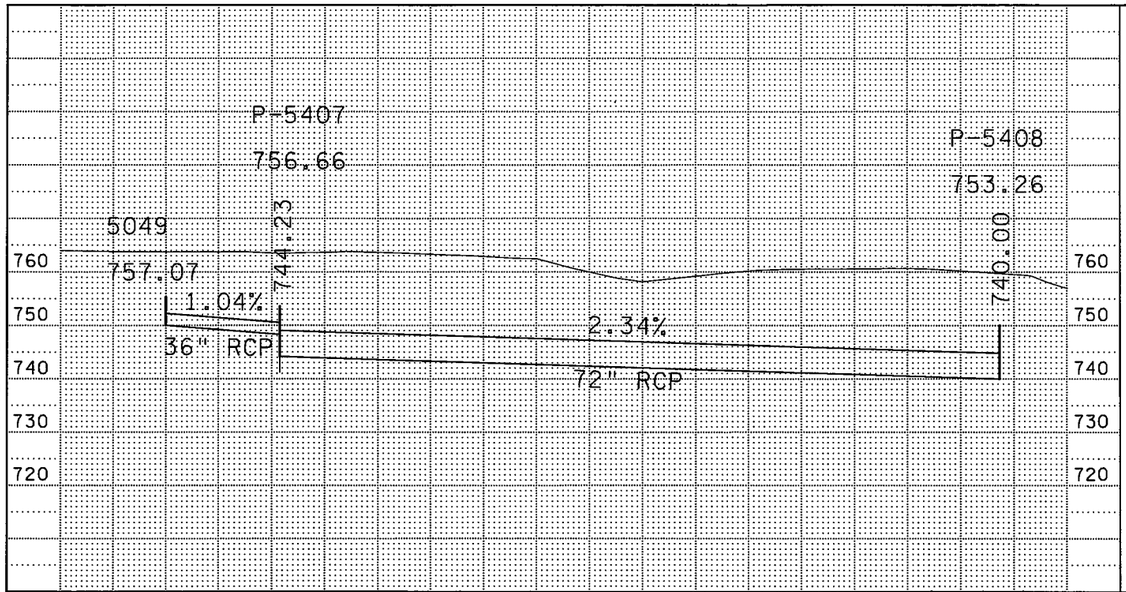

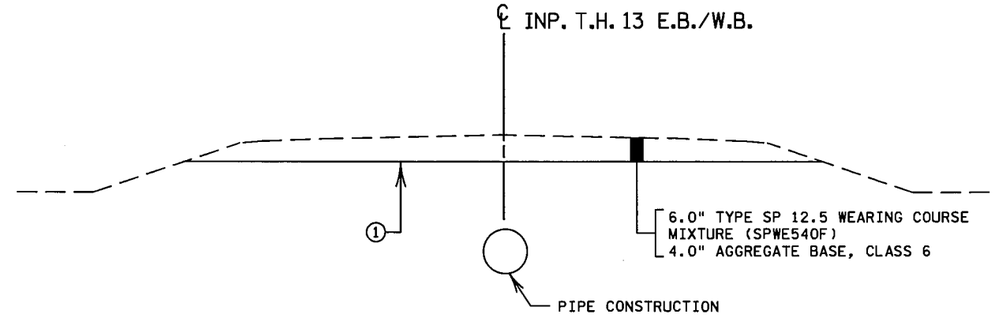

NOTE:
FOR ADDITIONAL STAGING INFORMATION, SEE TRAFFIC CONTROL PLAN.

STAGE 1A AND 1B ARE INTERCHANGABLE, DEPENDING ON THE CONTRACTORS CONSTRUCTION SEQUENCE.

① ALL REMOVALS AND BACKFILL QUANTITIES BELOW THIS LINE ARE CONSIDERED PART OF THE PIPE SEWER CONSTRUCTION.

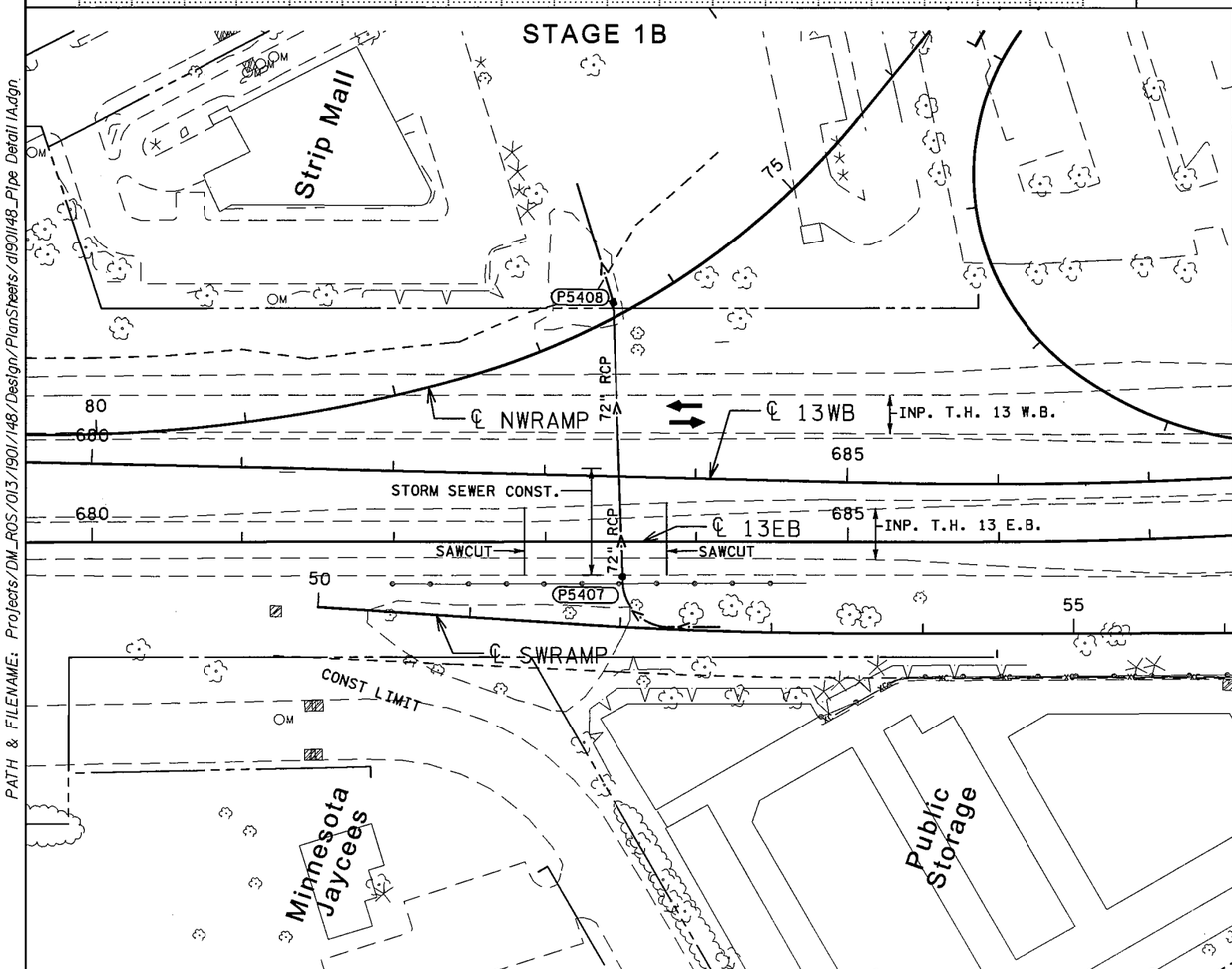

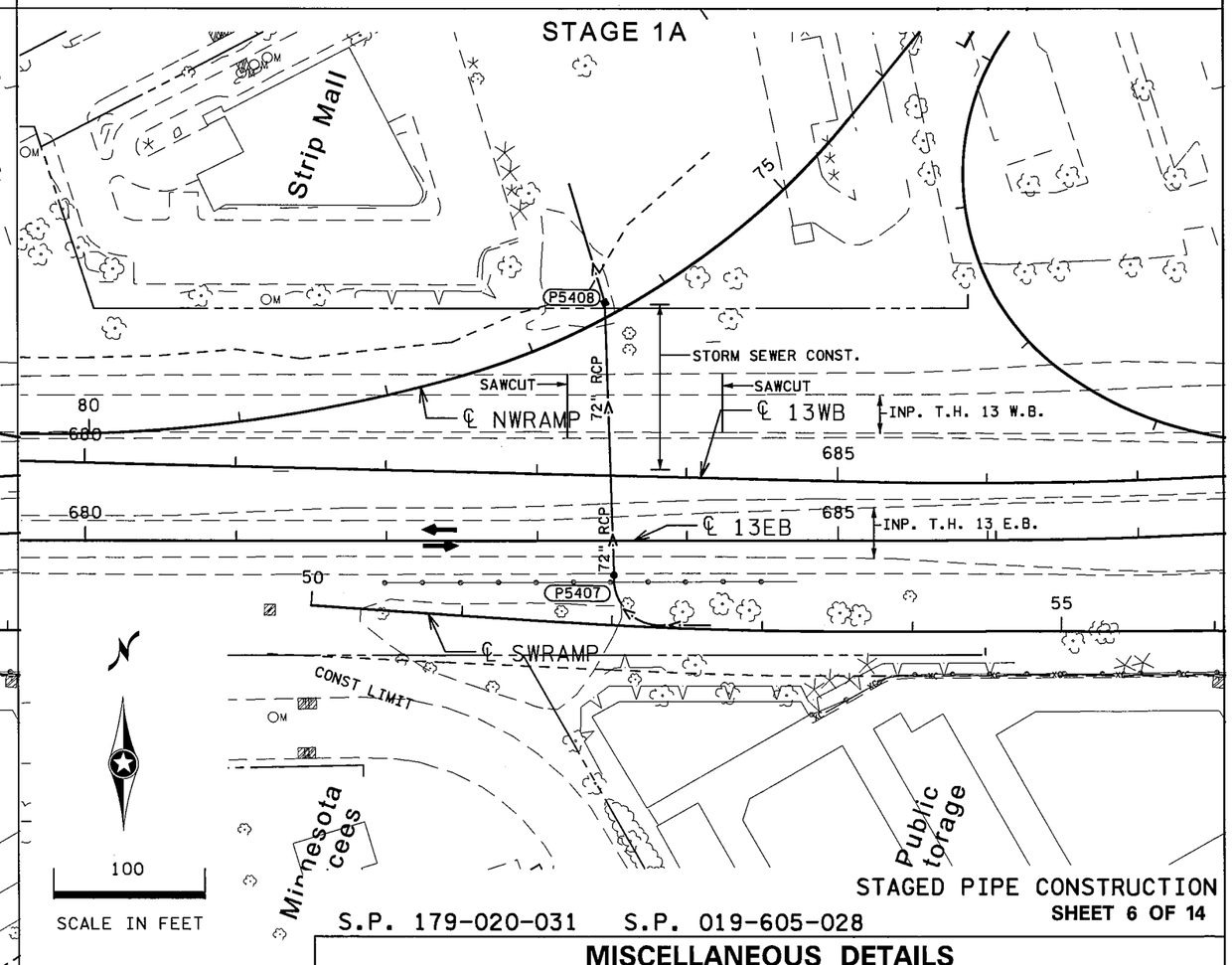

STAGED PIPE CONSTRUCTION

SHEET 6 OF 14

S.P. 179-020-031 S.P. 019-605-028

MISCELLANEOUS DETAILS

DRAWN BY: MRS	CHECKED BY: HS	CERTIFIED BY _____ LICENSED PROFESSIONAL ENGINEER	LIC. NO. 18520 DATE 6/18/12	STATE PROJ. NO. 1901-148 (T.H. 13)	SHEET NO. 95 OF 442 SHEETS

PLOTTED/REVISED: 14-JUN-2012 10:11
DISTRICT : METRO
IPLOT NAME: d1901148_Pipe Detail 1A
PATH & FILENAME: Projects/DM_ROS/013/1901/148/Design/PlanSheets/d1901148_Pipe Detail 1A.dgn

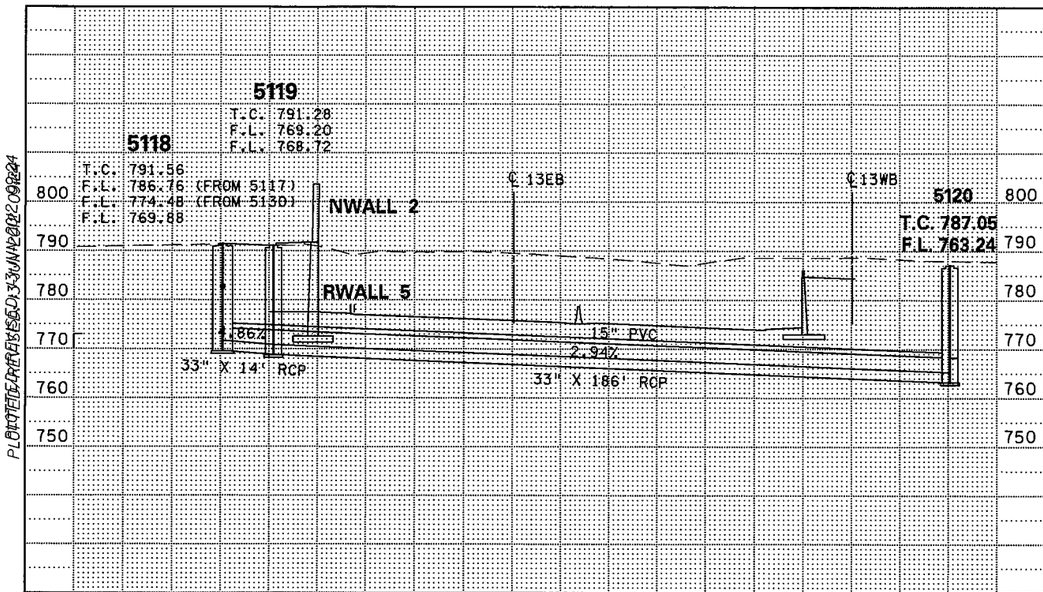

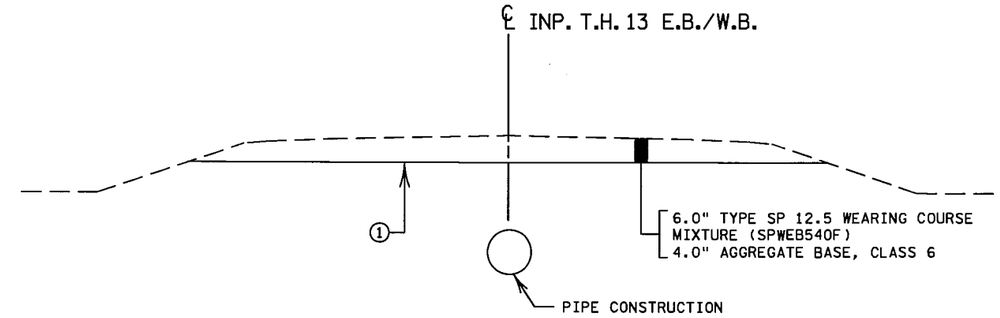

NOTE:
FOR ADDITIONAL STAGING INFORMATION, SEE TRAFFIC CONTROL PLAN.

STAGE 1A AND 1B ARE INTERCHANGABLE, DEPENDING ON THE CONTRACTORS CONSTRUCTION SEQUENCE.

① ALL REMOVALS AND BACKFILL QUANTITIES BELOW THIS LINE ARE CONSIDERED PART OF THE PIPE SEWER CONSTRUCTION.

STAGE 1B

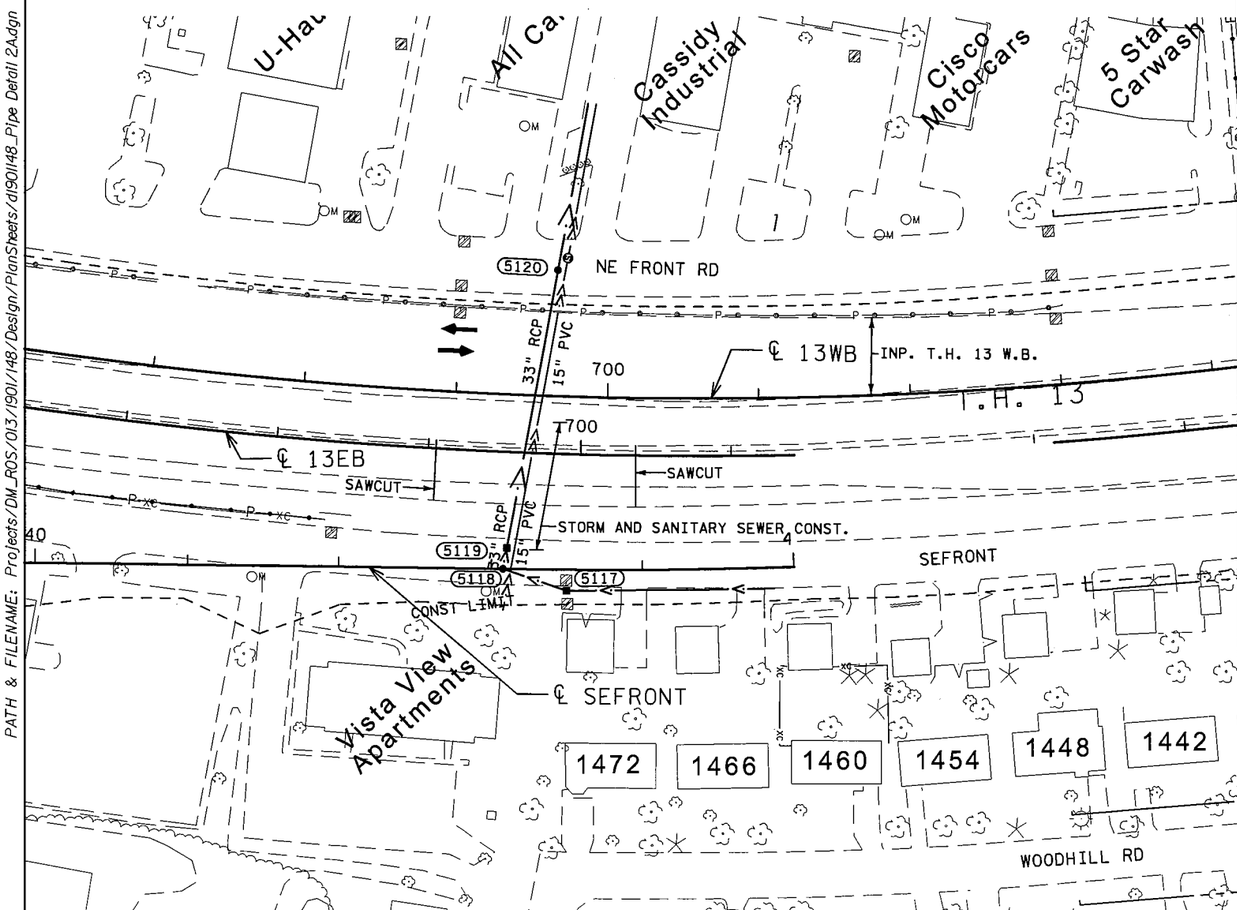

STAGE 1A

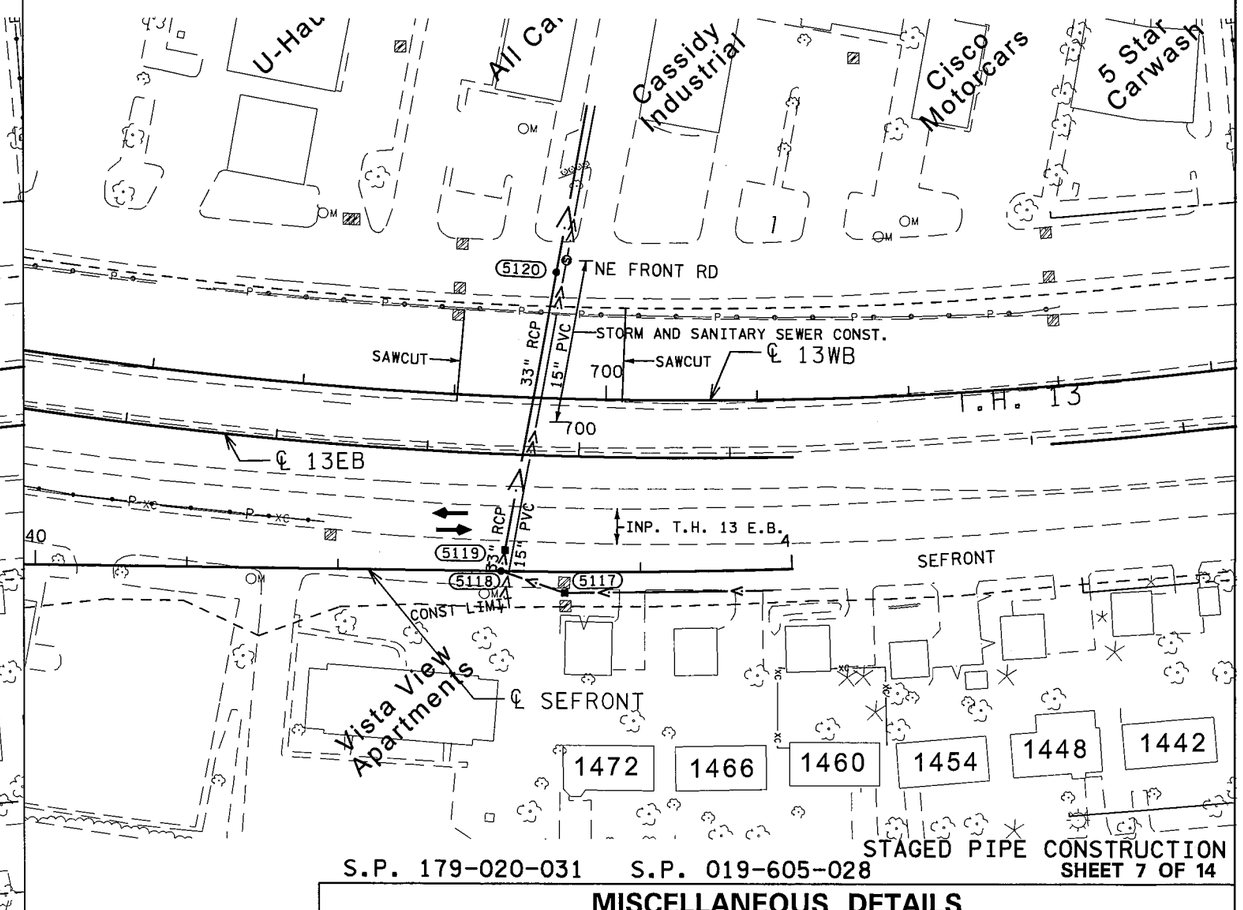

S.P. 179-020-031 S.P. 019-605-028

STAGED PIPE CONSTRUCTION
SHEET 7 OF 14

MISCELLANEOUS DETAILS

DRAWN BY: MRS	CHECKED BY: HS	CERTIFIED BY LICENSED PROFESSIONAL ENGINEER	LIC. NO. 18520 DATE 6/18/12	STATE PROJ. NO. 1901-148 (T.H. 13)	SHEET NO. 96 OF 442 SHEETS

DISTRICT #: METRO
PATH & FILENAME: Projects/DM_ROS/013/1901/148/Design/PlanSheets/d1901148_Pipe Detail 2A
IPLOT NAME: d1901148_Pipe Detail 2A.dgn
PLOTTED BY: MARSHALL, SCOTT 3:43PM NOV 20 2012 09:24

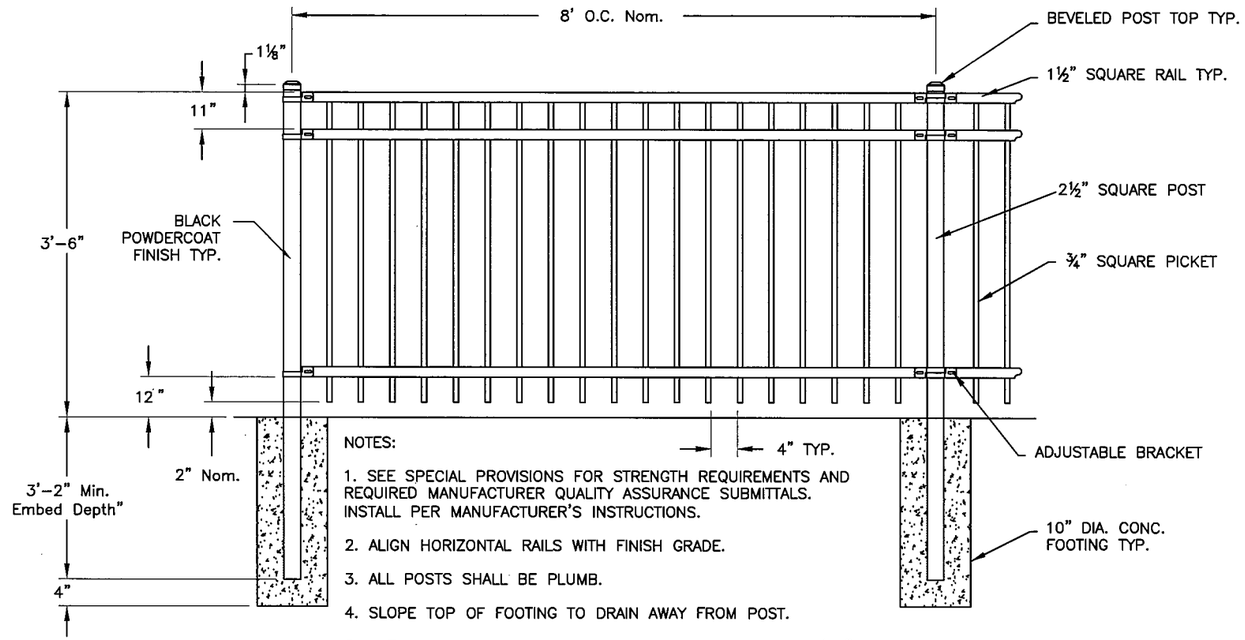

NOTES:

1. SEE SPECIAL PROVISIONS FOR STRENGTH REQUIREMENTS AND REQUIRED MANUFACTURER QUALITY ASSURANCE SUBMITTALS. INSTALL PER MANUFACTURER'S INSTRUCTIONS.
2. ALIGN HORIZONTAL RAILS WITH FINISH GRADE.
3. ALL POSTS SHALL BE PLUMB.
4. SLOPE TOP OF FOOTING TO DRAIN AWAY FROM POST.
5. ACTUAL MEMBER OUTER DIMENSIONS SHALL BE WITHIN 1/16" OF THE INDICATED DIMENSION SELECTED FROM THE MANUFACTURER'S STANDARD SIZES.
6. 4" MAX. OPENING BETWEEN STRUCTURAL MEMBERS IN ALL LOCATIONS.

ORNAMENTAL IRON FENCE

NOT TO SCALE

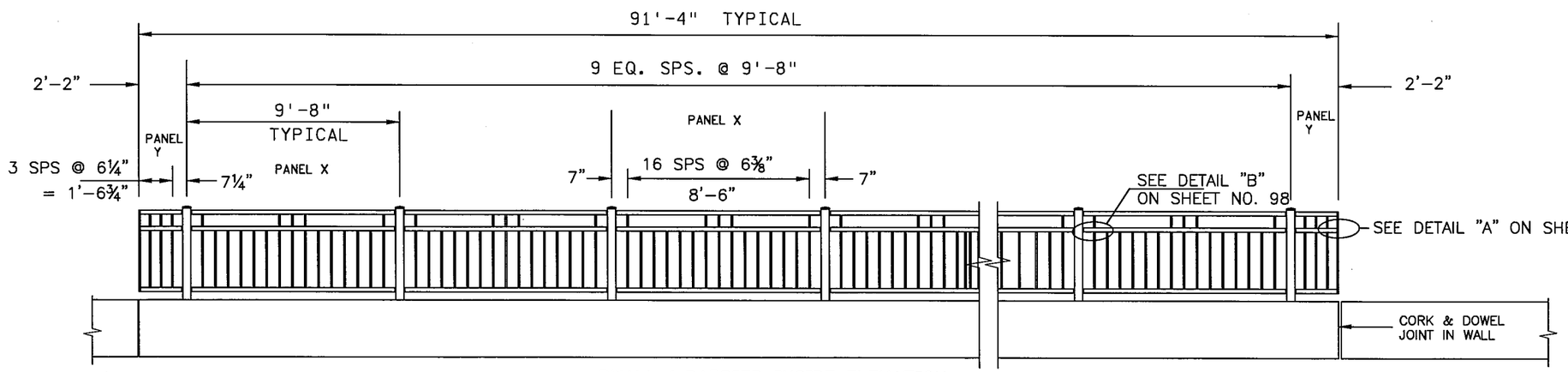

NOTES:

FOR ADDITIONAL ORNAMENTAL METAL RAILING DETAILS, SEE SHEET NO. 98.

RWALL 1 BARRIER INSIDE ELEVATION

BR. NO. 19036 — WINGWALL PARAPET | RWALL 1 — PARAPET

ORNAMENTAL METAL RAILING

NOT TO SCALE

ORNAMENTAL IRON FENCE
ORNAMENTAL METAL RAILING

S.P. 179-020-031 S.P. 019-605-028

8 OF 14

MISCELLANEOUS DETAILS

DRAWN BY: CT	CHECKED BY: HS	CERTIFIED BY LICENSED PROFESSIONAL ENGINEER LIC. NO. 18520 DATE 7/02/12	STATE PROJ. NO. 1901-148 (T.H. 13)	SHEET NO. 97 OF 442 SHEETS

PLOTTED/REVISED: 02-JUL-2012 15:21
DISTRICT #: METRO
IPLOT NAME: d190148_dd2_1
PATH & FILENAME: Projects/DM_ROS/013/1901/148/Design/PlanSheets/Details/d190148_dd2.dgn

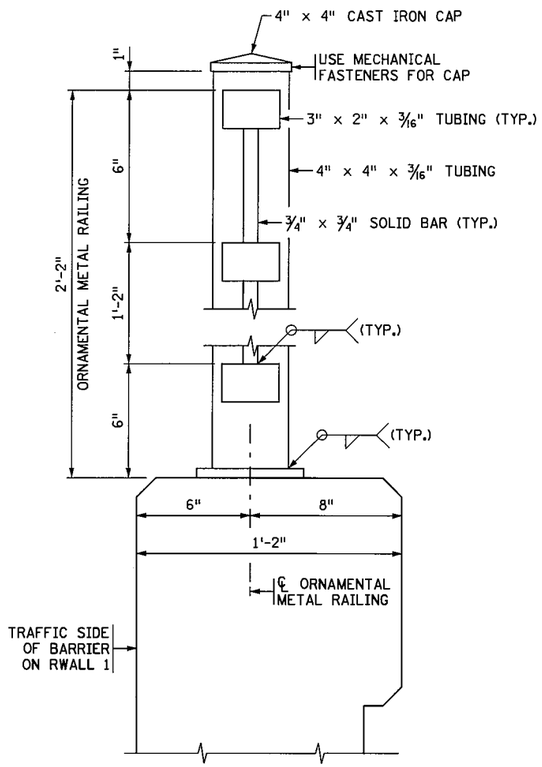

SECTION THRU RAILING

PANEL "X" AND "Y"

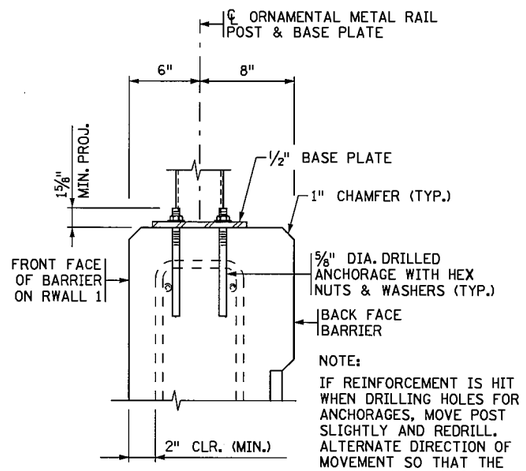

NOTE:

IF REINFORCEMENT IS HIT WHEN DRILLING HOLES FOR ANCHORAGES, MOVE POST SLIGHTLY AND REDRILL. ALTERNATE DIRECTION OF MOVEMENT SO THAT THE OVERALL RAIL LENGTH COMES OUT THE SAME.

ANCHOR DETAIL

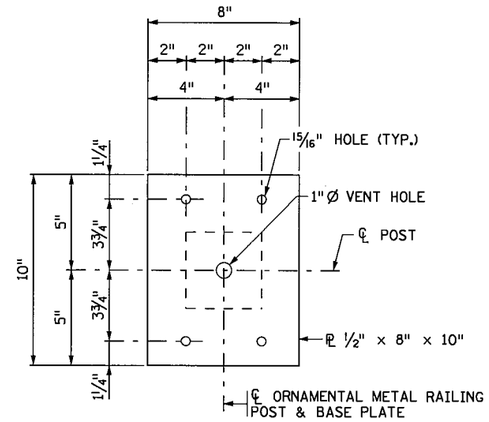

BASE PLATE

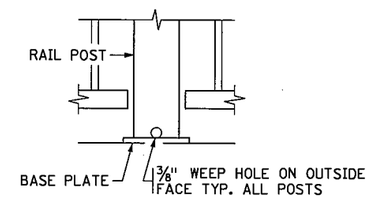

WEEPHOLE DETAIL

GENERAL NOTES:

ALL STRUCTURAL STEEL TUBING IN THE RAIL SHALL BE ASTM A 500, GRADE B AND A513, GRADE 2. 3361. ALL OTHER STRUCTURAL STEEL SHALL CONFORM TO Mn/DOT SPEC. 3306.

ANCHOR RODS SHALL CONFORM TO Mn/DOT SPEC. 3385, TYPE A.

FASTENERS SHALL BE PER Mn/DOT SPEC. 3391 AND SHALL BE MECHANICALLY GALVANIZED PER ASTM B 695 CLASS 50.

VENT HOLES SHALL BE DRILLED IN THE RAIL POST BASE AND THE RAIL TUBES AS NECESSARY TO FACILITATE GALVANIZING.

GALVANIZE ALL OTHER STRUCTURAL STEEL PER Mn/DOT SPEC. 3394 AFTER FABRICATION.

RAIL POSTS AND PICKETS SHALL BE NORMAL TO GRADE EXCEPT AS NOTED OR SHOWN.

HORIZONTAL RAILS SHALL BE PARALLEL TO THE TOP OF THE PARAPET.

SEE SPECIAL PROVISIONS FOR RAIL ANCHORAGE REQUIREMENTS.

RAILING, BASE PLATES AND EXPOSED PORTIONS OF BOLTS, NUTS AND WASHERS SHALL BE PAINTED IN ACCORDANCE WITH THE SPECIAL PROVISIONS.

METAL RAILING SHALL BE GROUNDED EVERY 91.5' WITH 5/8" DIA. COPPER ROD AS PER Mn/DOT SPEC. 2557.

PRICE BID FOR ORNAMENTAL METAL RAILING INCLUDES THE ANCHORAGES AND ALL MATERIAL ABOVE TOP OF CONCRETE PARAPET.

LENGTH OF ORNAMENTAL METAL RAILING FOR PAYMENT SHALL BE MEASURED FROM END TO END OF RETAINING WALL 1.

RAIL POSTS AND PICKETS SHALL BE VERTICAL OR PLUMB.

MAXIMUM SPACING BETWEEN PICKETS OR BETWEEN POST AND PICKETS SHALL BE NO GREATER THAN 5-15/16 INCHES.

SEE BRIDGE PORTION OF CONTRACT FOR ADDITIONAL DETAILS.

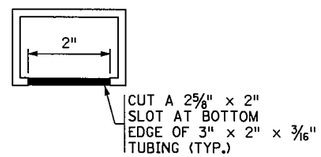

SECTION B-B

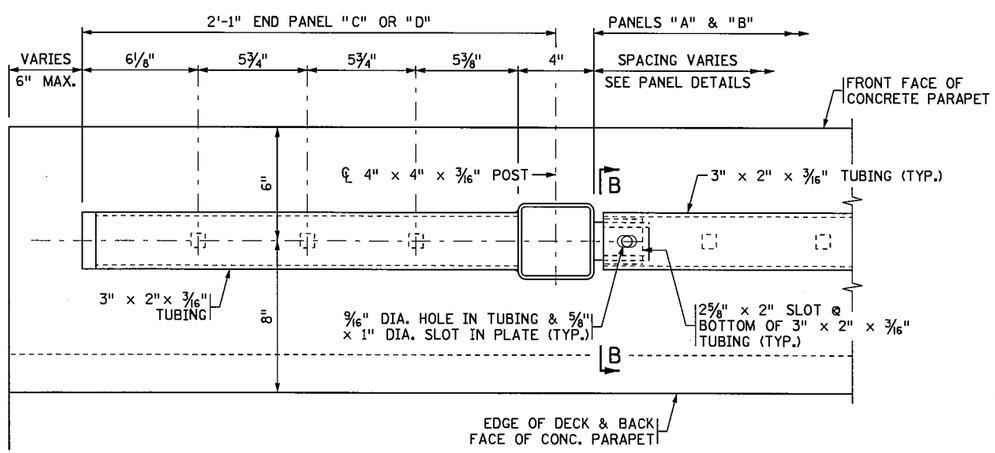

SECTION A-A

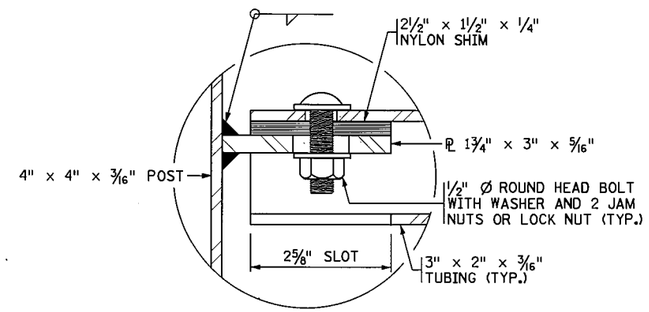

DETAIL "C"

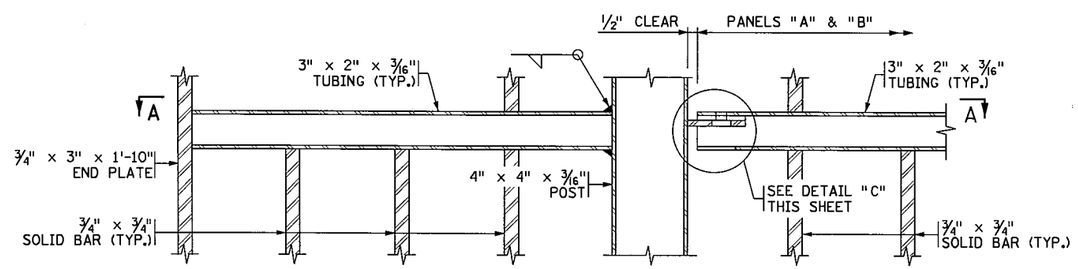

DETAIL "A"

FOR END PANELS

DETAIL "B"

ORNAMENTAL METAL RAILING

9 OF 14

S.P. 179-020-031 S.P. 019-605-028

MISCELLANEOUS DETAILS

DRAWN BY: CT	CHECKED BY: HS	CERTIFIED BY LICENSED PROFESSIONAL ENGINEER LIC. NO. 18520 DATE 7/02/12	STATE PROJ. NO. 1901-148 (T.H. 13)	SHEET NO. 98 OF 442 SHEETS

PLOTTED/REVISED: 02-JUL-2012 15:21
DISTRICT #: METRO
IPLOT NAME: d1901148_dd2_2
PATH & FILENAME: Projects/DM_ROS/013/1901/148/Design/PlanSheets/Details/d1901148_dd2.dgn

1. FABRICATE 12" X 9" X 3/8" SIGN WITH 0.75" RADIUS CORNERS.
2. SIGN SHALL BE WHITE WITH BLACK LETTERING.
3. ATTACH SIGN TO POST USING 1" LENGTH WOOD SCREWS.

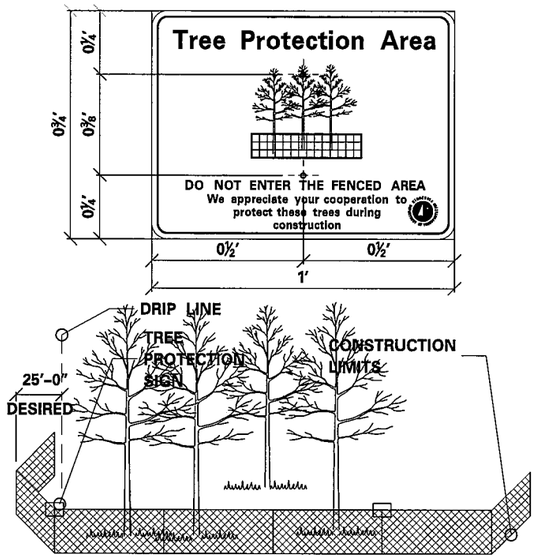

1. FURNISH AND INSTALL TEMPORARY FENCE AT THE TREE'S DRIPLINE OR CONSTRUCTION LIMITS AS SPECIFIED, PRIOR TO ANY CONSTRUCTION.
2. WHEN POSSIBLE PLACE FENCE 25 FEET BEYOND THE DRIP LINE.
3. PLACE TREE PROTECTION SIGNS ALONG FENCE AT 50' INTERVALS.

TEMPORARY FENCE

(MnDOT 2572.3A1)

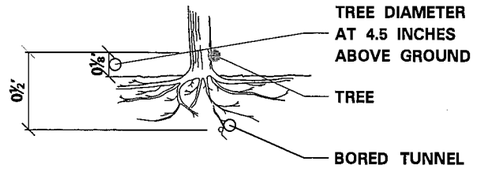

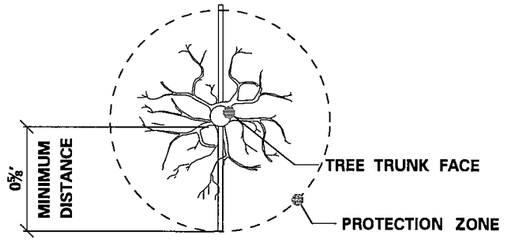

TREE PROTECTION ZONE		
TREE DIAMETER AT 4.5' ABOVE GROUND	MINIMUM DISTANCE FROM FACE OF TREE TRUNK	MINIMUM DEPTH OF TUNNEL
0"–2"	2'	2'
3"–4"	4'	2.5'
5"–9"	6'	2.5'
10"–14"	10'	3'
15"–19"	12'	3.25'
19" +	15'	4'

UTILITY CONSTRUCTION

(MnDOT 2572.3A5)

1. REDUCE COMPACTION ON ROOT SYSTEMS WHERE IT OCCURS BY DRILLING 2" DIAM. HOLES IN THE SOIL TO A DEPTH OF 18". BEGIN 3'-0" FROM THE TREE TRUNK AND CONTINUE AT 2'-0" INTERVALS IN CONCENTRIC RINGS OUT TO THE PROTECTION ZONE.
2. WATERING OF ROOT DAMAGED TREES WILL BE REQUIRED TO MAINTAIN ADEQUATE BUT NOT EXCESSIVE SOIL MOISTURE TO A DEPTH OF 18" WITHIN THE UNDISTURBED PORTION OF THE IMPACTED TREE DRIPLINE.

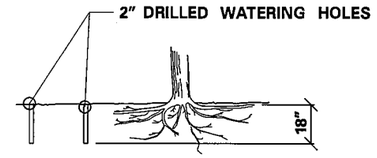

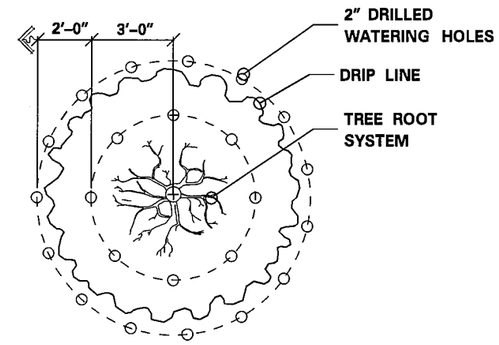

WATERING

(MnDOT 2572.3A3)

SIGNIFICANT TREES NEAR THE PROPOSED CONSTRUCTION LIMITS WILL BE IDENTIFIED IN THE PLAN OR BY THE ENGINEER AND WILL BE PRESERVED BY THE CONTRACTOR.

1. PLACE THE TEMPORARY FENCE.
2. REDUCE SLOPE ROUNDING WHERE ROOT ZONES ARE DISTURBED BY NORMAL SLOPE ROUNDING.
3. VARY BACK SLOPE STEEPNESS TO AVOID TREE LOSS OR UNNECESSARY ROOT DAMAGE.

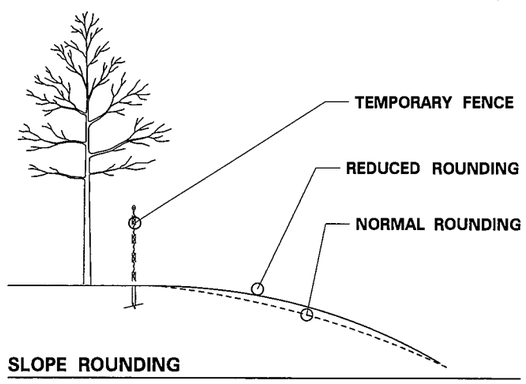

SLOPE ROUNDING

1. WHEN DESIGNATED IN THE PLAN OR DIRECTED BY THE ENGINEER, PRIOR TO EXCAVATION, ALL TREE ROOTS WILL BE CLEANLY CUT BY A VIBRATORY PLOW OR OTHER APPROVED ROOT CUTTER.
2. THE TREE ROOTS WILL BE CUT CLEANLY TO THE MAXIMUM DEPTH NECESSARY FOR CONSTRUCTION.
3. ROOT ENDS EXPOSED BY EXCAVATION ACTIVITIES SHALL BE IMMEDIATELY COVERED WITH A 6" LAYER OF ADJACENT SOIL.

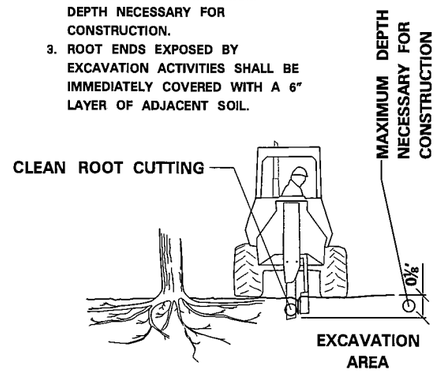

CLEAN ROOT CUTTING

(MnDOT 2572.3A2)

IF CONSTRUCTION VEHICLES MUST PASS OVER ROOT ZONES, THE CONTRACTOR MUST EITHER:

1. CONSTRUCT ROOT SYSTEM BRIDGES WITH STEEL PLATE SUPPORTED ON WOOD TIMBERS PLACED RADIALLY TO THE TREE TRUNK.

OR

2. PLACE A 6 INCH LAYER OF WOODCHIP MULCH OVER A GEOTEXTILE (3733) (PERMEABLE FABRIC) TYPE III.

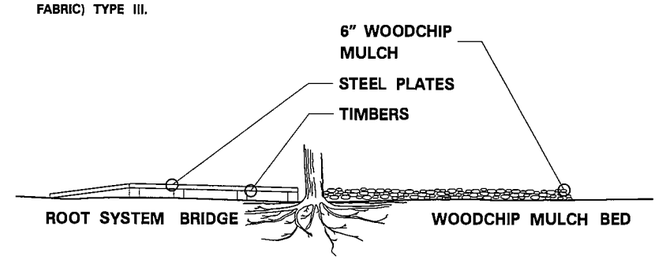

OTHER VEGETATION PROTECTION MEASURES

(MnDOT 2572.3A10)

S.P. 179-020-031 S.P. 019-605-028

SHEET 10 OF 14

MISCELLANEOUS DETAILS

DRAWN BY: GJ | CHECKED BY: HS | CERTIFIED BY _____ LICENSED PROFESSIONAL ENGINEER LIC. NO. 18520 DATE 6/18/12

STATE PROJ. NO. 1901-148 (T.H. 13) SHEET NO. 99 OF 442 SHEETS

PLOTTED/REVISED: 13-JUN-2012 09:29
DISTRICT #: METRO
IPLOT NAME: d6285/35_dt
PATH & FILENAME: Projects/DM_ROS/013/1901/148/Design/PlanSheets/d6285/35_dt.dgn

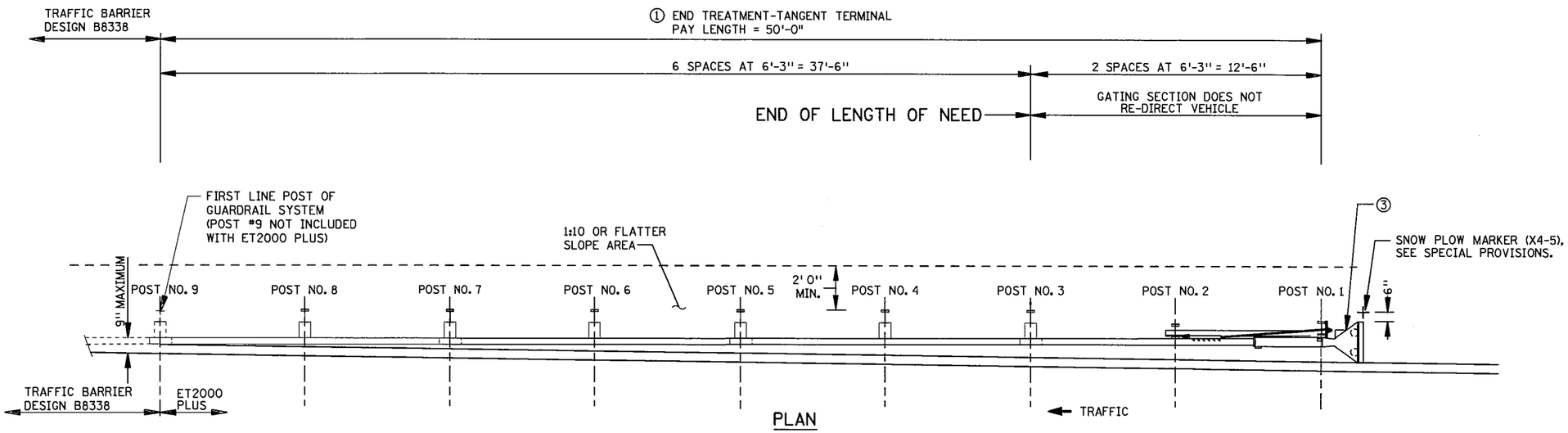

PLAN

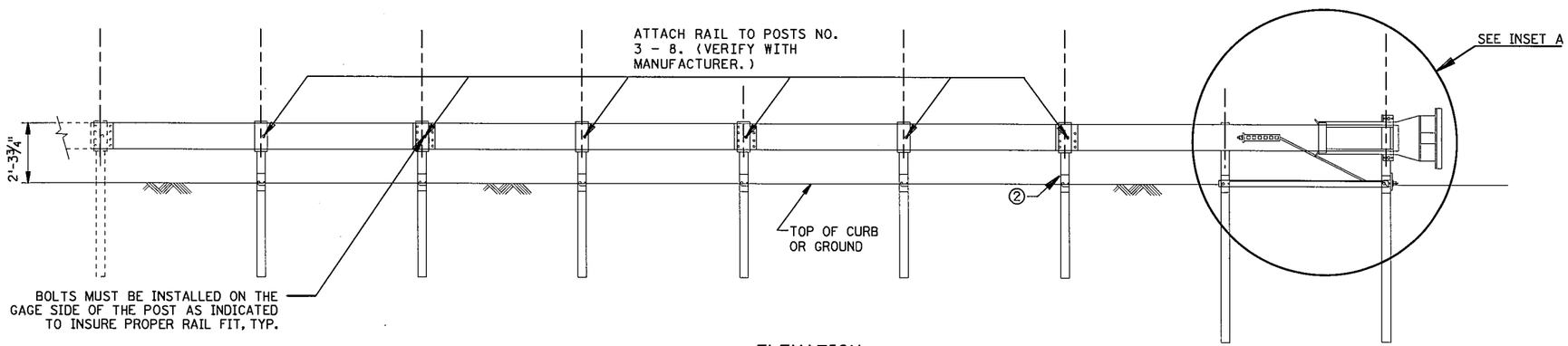

ELEVATION

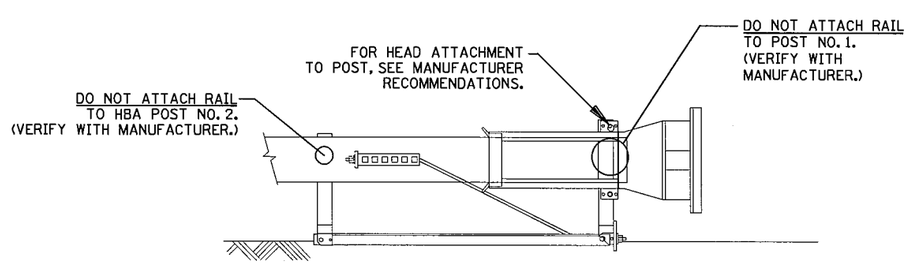

INSET A

GENERAL NOTES:

ALL BOLTS, NUTS, CABLE ASSEMBLIES, CABLE ANCHORS AND BEARING PLATES SHALL BE GALVANIZED.

THIS DRAWING IS FOR INFORMATION ONLY. CONTACT THE MANUFACTURER, TRINITY HIGHWAY PRODUCTS, LLC., FOR CURRENT DETAILS AND INSTALLATION INSTRUCTIONS. ALSO REFER TO MN/DOT STANDARD PLANS FOR ADDITIONAL GUARDRAIL INSTALLATION INFORMATION.

THIS IS A PROPRIETARY ITEM AS PER SPEC. 1703.

NOTES:

① USE STEEL HINGED BREAKAWAY (HBA) POSTS OPTIONS ONLY ON POSTS 1-8.

② THE NON-BREAKAWAY SECTION OF THE HBA POSTS SHALL NOT EXTEND MORE THAN 4" ABOVE THE FINISHED GROUND LINE.

③ THE RAIL IS DESIGNED TO EXIT THE TERMINAL HEAD ON THE BACK SIDE OF THE GUARDRAIL INSTALLATION.

DISTRICT #: METRO
IPLOT NAME: et2000steel_Mdd
PATH & FILENAME: Projects/DM_ROS/013/1901/148/Design/PlanSheets/Standard Plans/et2000steel_Mdd.dgnPLOTTED/REVISED:13-JUN-2012 09:31

DISTRICT #: METRO
IPLOT NAME: skt350bhsteel_Mdd
PATH & FILENAME: Projects/DM_ROS/013/1901/148/Design/PlanSheets/Standard Plans/skt350bhsteel_Mdd.dgn
PLOTTED/REVISED: 13-JUN-2012 09:32

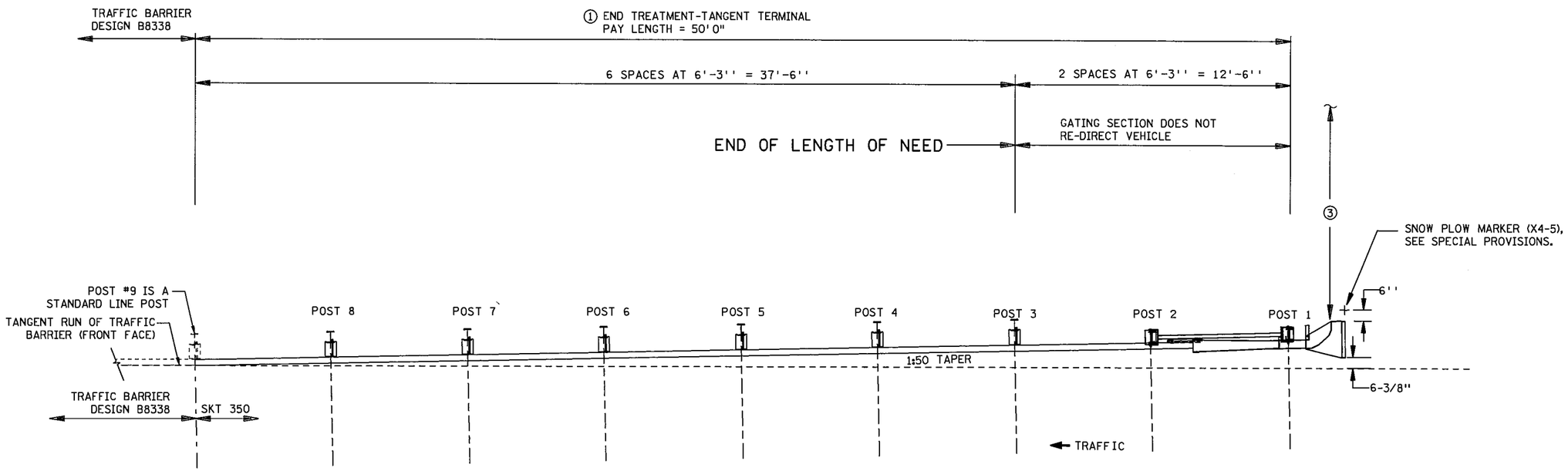

PLAN

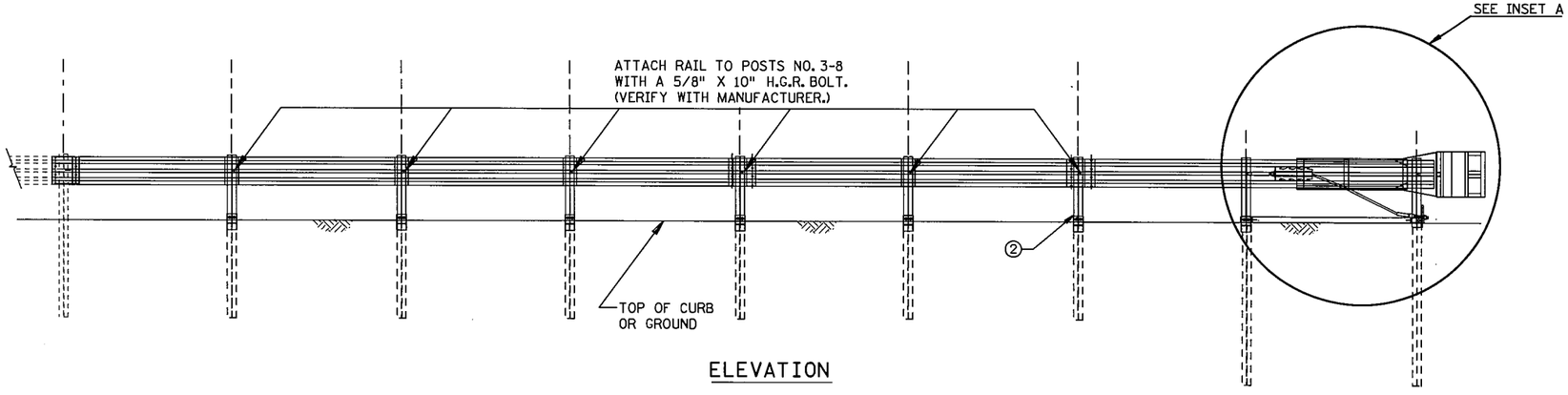

ELEVATION

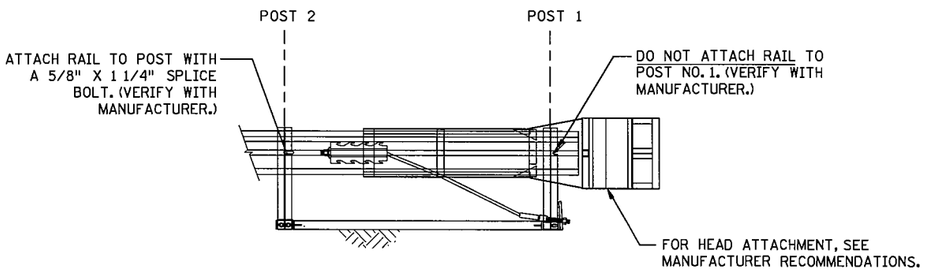

INSET A

GENERAL NOTES:

ALL BOLTS, NUTS, CABLE ASSEMBLIES, CABLE ANCHORS AND BEARING PLATES SHALL BE GALVANIZED.

THIS DRAWING IS FOR INFORMATION ONLY. CONTACT THE MANUFACTURER, ROAD SYSTEMS, INC., FOR CURRENT DETAILS AND INSTALLATION INSTRUCTIONS. REFER TO MN/DOT STANDARD PLANS FOR ADDITIONAL GUARDRAIL INSTALLATION INSTRUCTIONS.

THIS IS A PROPRIETARY ITEM AS PER SPEC. 1703.

NOTES:

① USE STEEL HINGED BREAKAWAY (HBA) POSTS OPTIONS ONLY ON POSTS 1-8.

② THE NON-BREAKAWAY SECTION OF THE HBA POSTS SHALL NOT EXTEND MORE THAN 4" ABOVE THE FINISHED GROUND LINE.

③ THE TRAFFIC BARRIER IS DESIGNED TO EXIT THE TERMINAL HEAD ON THE BACK SIDE OF THE INSTALLATION. A SPECIAL SITE EVALUATION SHOULD BE CONSIDERED PRIOR TO USING THE SKT WHERE THERE IS LESS THAN 25' BETWEEN THE BACK SIDE OF THE SKT AND ANY ADJACENT DRIVING LANE.

S.P. 179-020-031 S.P. 019-605-028

END TREATMENT - TANGENT TERMINAL - SKT-350 HBA POST OPTION

METRO DESIGN DETAIL
REVISED DATE: 2/25/11

STATE PROJ. NO. 1901-148 (TH 13) SHEET NO. 101 OF 442 SHEETS

PLOTTED/REVISED: 13-JUN-2012 09:33
DISTRICT #: METRO
IPLOT NAME: srt27steel_Mdd
PATH & FILENAME: Projects/DM_ROS/013/1901/148/Design/PlanSheets/Standard Plans/srt27steel_Mdd.dgn

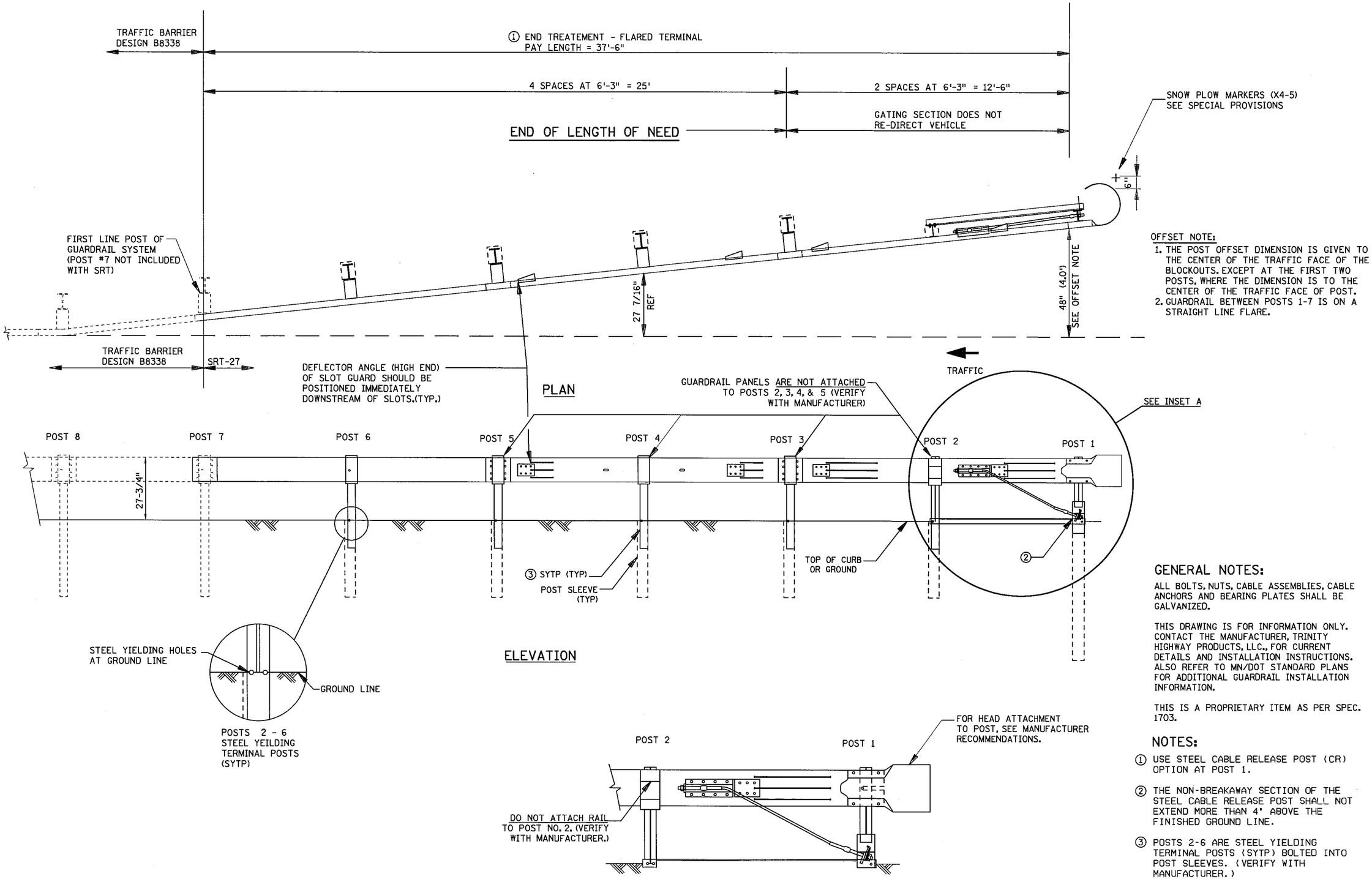

OFFSET NOTE:

1. THE POST OFFSET DIMENSION IS GIVEN TO THE CENTER OF THE TRAFFIC FACE OF THE BLOCKOUTS. EXCEPT AT THE FIRST TWO POSTS, WHERE THE DIMENSION IS TO THE CENTER OF THE TRAFFIC FACE OF POST.
2. GUARDRAIL BETWEEN POSTS 1-7 IS ON A STRAIGHT LINE FLARE.

GENERAL NOTES:

ALL BOLTS, NUTS, CABLE ASSEMBLIES, CABLE ANCHORS AND BEARING PLATES SHALL BE GALVANIZED.

THIS DRAWING IS FOR INFORMATION ONLY. CONTACT THE MANUFACTURER, TRINITY HIGHWAY PRODUCTS, LLC., FOR CURRENT DETAILS AND INSTALLATION INSTRUCTIONS. ALSO REFER TO MN/DOT STANDARD PLANS FOR ADDITIONAL GUARDRAIL INSTALLATION INFORMATION.

THIS IS A PROPRIETARY ITEM AS PER SPEC. 1703.

NOTES:

① USE STEEL CABLE RELEASE POST (CR) OPTION AT POST 1.

② THE NON-BREAKAWAY SECTION OF THE STEEL CABLE RELEASE POST SHALL NOT EXTEND MORE THAN 4' ABOVE THE FINISHED GROUND LINE.

③ POSTS 2-6 ARE STEEL YIELDING TERMINAL POSTS (SYTP) BOLTED INTO POST SLEEVES. (VERIFY WITH MANUFACTURER.)

S.P. 179-020-031 S.P. 019-605-028 **SHEET 13 OF 14**

METRO DESIGN DETAIL REVISED DATE: 2/25/11	END TREATMENT - FLARED TERMINAL - SRT-27 SYTP IN SLEEVES OPTION
	STATE PROJ. NO. 1901-148 (TH 13) SHEET NO. 102 OF 442 SHEETS

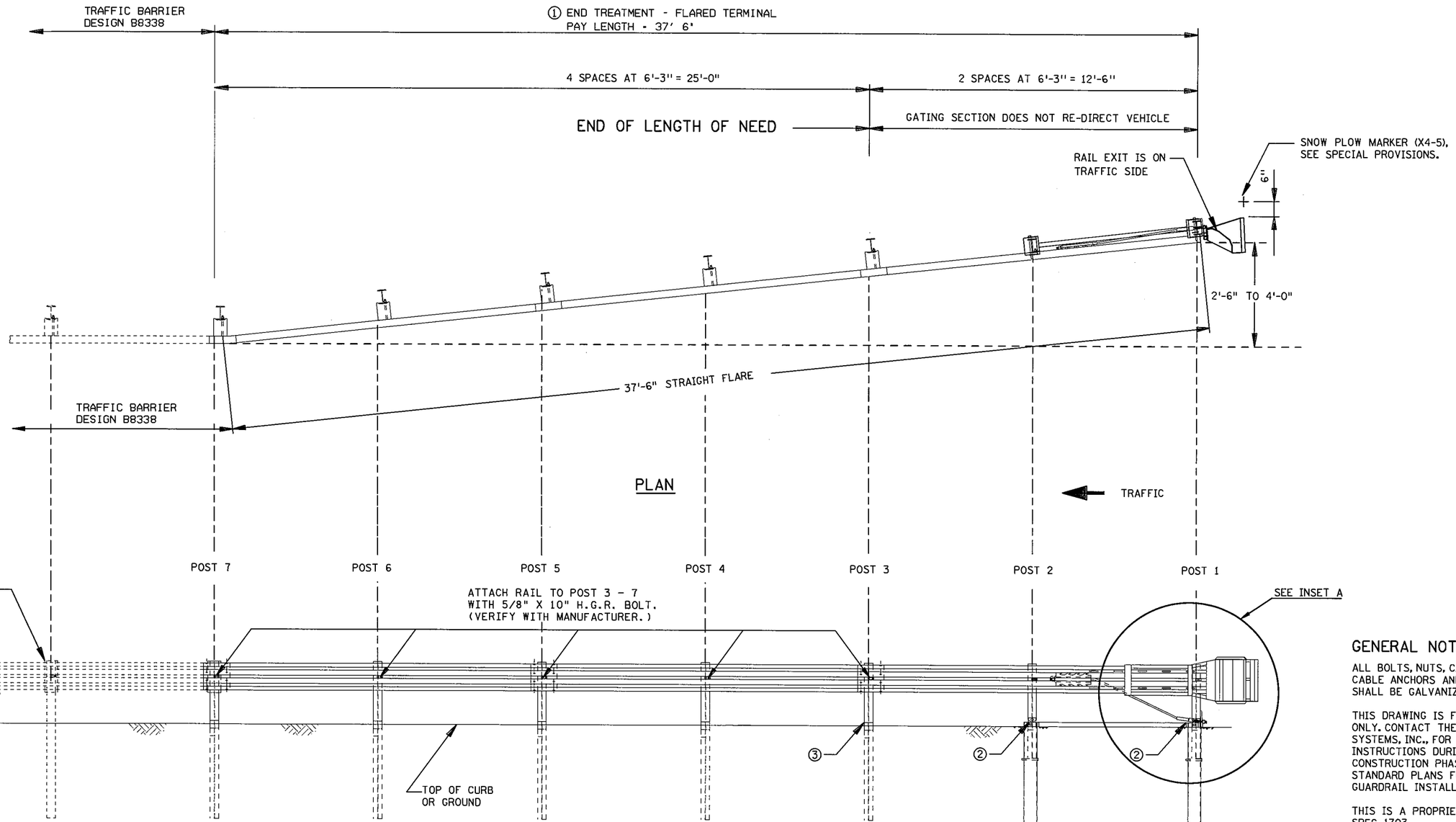

PLAN

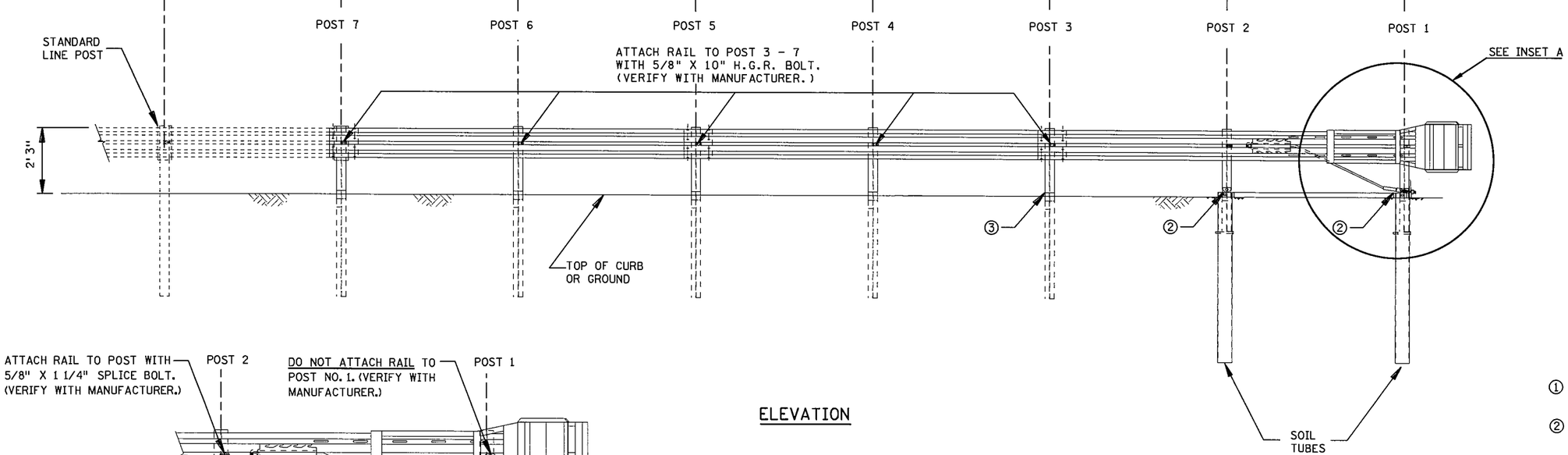

ELEVATION

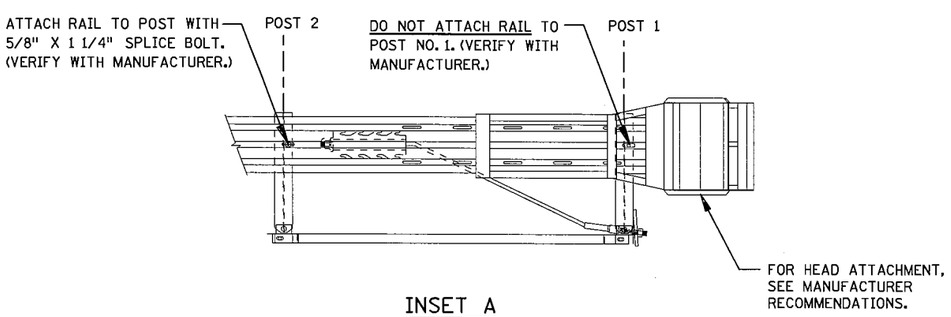

INSET A

GENERAL NOTES:

ALL BOLTS, NUTS, CABLE ASSEMBLIES, CABLE ANCHORS AND BEARING PLATES SHALL BE GALVANIZED.

THIS DRAWING IS FOR INFORMATION ONLY. CONTACT THE MANUFACTURER, ROAD SYSTEMS, INC., FOR INSTALLATION INSTRUCTIONS DURING THE CONSTRUCTION PHASE. REFER TO MN/DOT STANDARD PLANS FOR ADDITIONAL GUARDRAIL INSTALLATION INSTRUCTIONS.

THIS IS A PROPRIETARY ITEM AS PER SPEC. 1703.

NOTES:

① USE STEEL HINGED BREAKAWAY POSTS (HBA) OPTIONS ONLY ON POST 1-7.

② THE SOIL TUBES SHALL NOT PROTRUDE MORE THAN 4" ABOVE GROUND. SITE GRADING MAY BE NECESSARY TO MEET THIS REQUIREMENT.

③ THE NON-BREAKAWAY SECTION OF THE HBA POSTS SHALL NOT EXTEND MORE THAN 4" ABOVE THE FINISHED GROUND LINE.

S.P. 179-020-031 S.P. 019-605-028 **SHEET 14 OF 14**

END TREATMENT - FLARED TERMINAL - FLEAT 350 HBA POST OPTION

METRO DESIGN DETAIL
REVISED DATE: 2/25/11

STATE PROJ. NO. 1901-148 (TH 13) SHEET NO. 103 OF 442 SHEETS

DISTRICT #: METRO
IPLOT NAME: fleat350steel_Mdd
PATH & FILENAME: Projects/DM_ROS/013/1901/148/Design/PlanSheets/Standard Plans/fleat350steel_Mdd.dgn
PLOTTED/REVISED: 13-JUN-2012 09:35

PLOTTED/REVISED: 13-JUN-2012 09:36

DISTRICT #: METRO
USER NAME: sl15_l_spn
PATH & FILENAME: Projects/DM_ROS/013/1901/148/Design/PlanSheets/Standard Plans/sl15_l_spn.dgn

FILE NAME: sl15_l_spn

BLUE TOPS

NORMAL SECTION

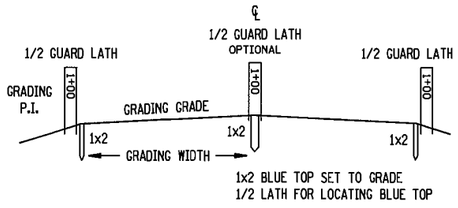

TRANSITION SECTION

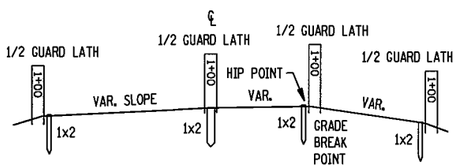

PIPE STAKING

PROFILE VIEW
CENTERLINE PIPE

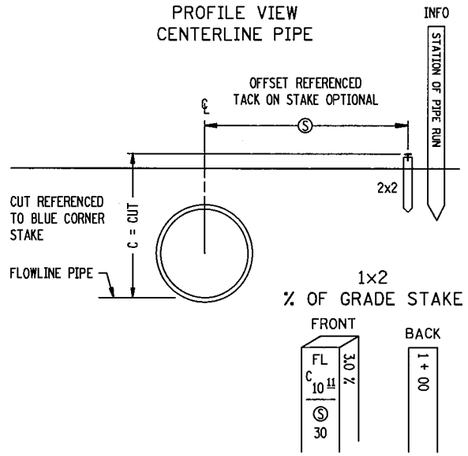

CATCH BASIN OR MANHOLE (CB/MH)

TOP VIEWS

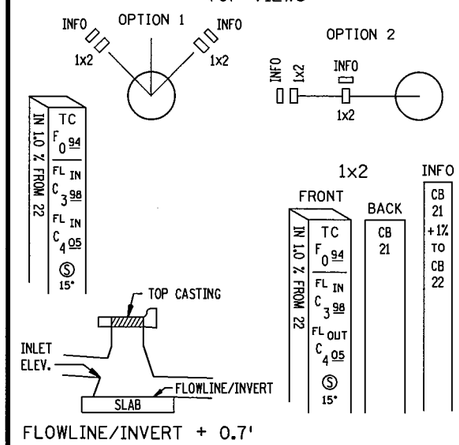

STANDARD STAKES

TYPES:
REFERENCE (REF)
INFORMATIONAL (INFO)
VISIBILITY (VIS)
GUARD (GUARD)

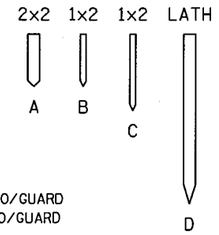

SIZES:
A = 2" X 2" X VAR. REF/INFO/GUARD
B = 1" X 2" X VAR. REF/INFO/GUARD
C = 1" X 2" X VAR. REF
D = LATH INFO/VIS/GUARD
1x2 OR LATH = INFO STAKES

ABBREVIATIONS

BBL = BARREL (PIPE)
B.C. = BACK CURB
C & G = CURB & GUTTER
C = CUT
CAP = CORR. ALUM. PIPE
CB = CATCH BASIN
℄ = CENTERLINE
CL & GR = CLEAR & GRUB
CMP = CORR. METAL PIPE
COR = CORNER
CR = CROWN
CSP = CORR. STEEL PIPE
℄ = DITCH CUT
D.E. = DRAINAGE EASEMENT
DI = DROP INLET
EB = EASTBOUND
E.M. = EDGE BITUMINOUS MAT
E.S. = EDGE CONCRETE SLAB
F = FILL
FF = FRONT FACE
FL = FLOW LINE
FL IN = FLOWLINE INLET
FL OUT = FLOWLINE OUTLET
GR = GRADE
GW = GRADING WIDTH
HH = HANDHOLE
HP = HIP POINT
LT = LEFT
MH = MANHOLE
NB = NORTHBOUND
Ⓢ = OFFSET
PAR = PARCEL
% = PERCENT GRADE
P.E. = PERM. EASEMENT
RAD = RADIUS POINT
RCP = REINF. CONC. PIPE
RP = REFERENCE POINT
RSC = REINF. SECT. CONC.
RT = RIGHT
R/W = RIGHT OF WAY
SB = SOUTHBOUND
SCP = SECT. CONC. PIPE
SH = SHOULDER
TC = TOP CASTING
OR TOP CURB
T.E. = TEMP. EASEMENT
3 : 1 = SLOPE (EXAMPLE)
WB = WESTBOUND
WP = WORKING POINTS

SLOPE STAKES

SINGLE ROADWAY - EXAMPLE 'A'

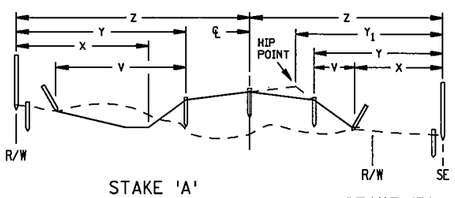

STAKE 'A'
FULL LATH AND HUB-STATION
DIST. TO ℄ WITH CUT/FILL TO ℄ (Z)
DIST. TO SHLD. WITH CUT/FILL TO SHLD. (Y) (Y1)
DIST. TO TOE OF SLOPE, CUT/FILL FROM HUB (X)
OFFSET TO SAFTY SLOPE
OFFSET TO HIP POINT

STAKE 'B'
FULL LATH
DITCH CUT/SHLD. FILL SLOPE RATED
DISTANCE TO INSLOPE TOE (V1) OR SHOULDER (AS APPLIES) (V)

NOTE:
BLUE TOPS REQUIRED ON ℄ AND BOTH SHOULDERS AT MINIMUM
ALL CULVERTS TO BE STAKED
MINIMUM DATA TO BE PROVIDED
STAKE TO BOTTOM OF TOPSOIL

SLOPE STAKES

SINGLE ROADWAY - EXAMPLE 'B'

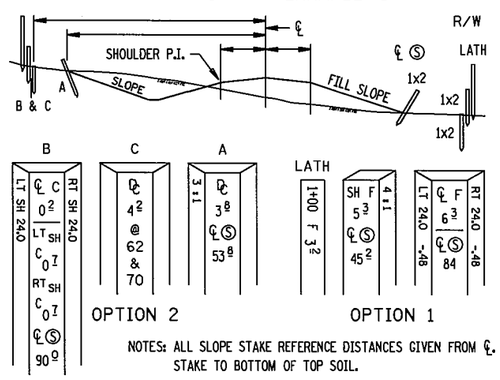

NOTES: ALL SLOPE STAKE REFERENCE DISTANCES GIVEN FROM ℄. STAKE TO BOTTOM OF TOP SOIL.
KEY STAKES: BLUE TOP SET AT R/W BOUNDRY LT. & RT. MAY BE EXCEPTIONS TO SETTING STAKE ON R/W.

CONCRETE PAVING STATIONARY FORM

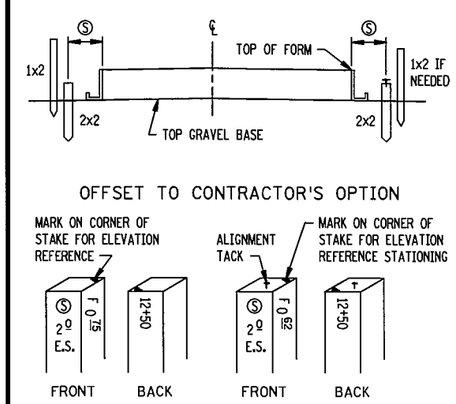

NOTE INFORMATION ON STAKE IF NECESSARY

RECOMMENDED STAKING INTERVALS

FIGURE A

	SLOPE STAKES	SUB GRADE B.T.	CLASS MATERIAL B.T.	CONC PAVT	C & G	CL & GR LIMITS	MUCK EXC.	R/W	TEMP. EASE.
TANGENT	100	100	100	50	50	ALL CORNERS	100	ALL CORNERS	ALL CORNERS
HORIZ. CURVE									
0 - 3°	100	100	100	50	50	ALL CORNERS	100	ALL CORNERS	ALL CORNERS
OVER 3° -	100	50	50	25	25	ALL CORNERS	100	ALL CORNERS	ALL CORNERS
VERT. CURVE									
"M" 100' CHORD 0 - .25	100	100	100	50	50				
"M" OVER .25	100	50	50	25	25				
TRAN.		50	50						

STAKING TOLERANCES (FEET)

	HORIZONTAL	VERTICAL
CONSTRUCTION LIMITS	± 1.5	
CLEARING & GRUBBING	2.0	
SLOPES STAKES	2.0	± 0.2
KEY STAKES	0.2	0.03
DRAINAGE STAKES	0.05	0.05
CURB & GUTTER	0.07	0.03
PAVING	0.05	0.03
ALIGNMENT	0.07	
UTILITY	0.10	0.05
STRUCTURAL	0.02	0.02
GUARD RAIL	0.5	
BUILDINGS	0.04	
O.H. SIGNS	0.05	0.05
MUCK EXCAVATION LIMITS	2.0	
R/W B-POINTS	0.10	
NOISE WALLS	1.0	0.5

THE TOLERANCES ARE RELATIVE TO PROJECT DATUM

UTILITY (UTIL)

STAKE POLES MINIMUM OF 5 FT. FROM ANY R/W CORNER
EXAMPLE: POLE LINE = R/W LINE

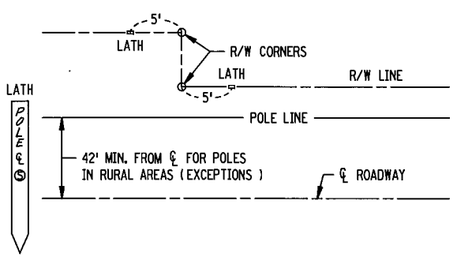

PULL BOX OR HAND HOLE

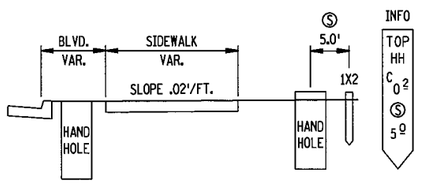

CURB & GUTTER (CURB)

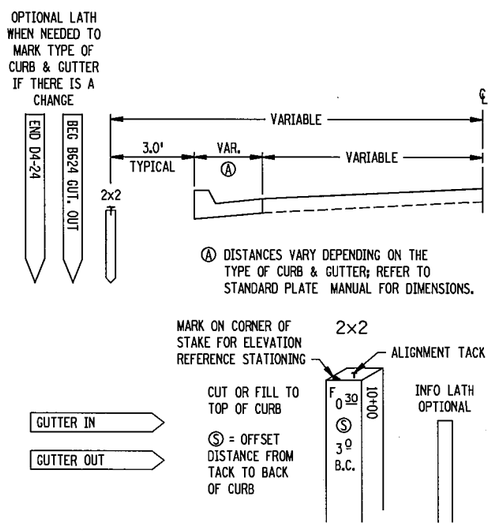

CONCRETE PAVING - SLIP FORM

OPTION A

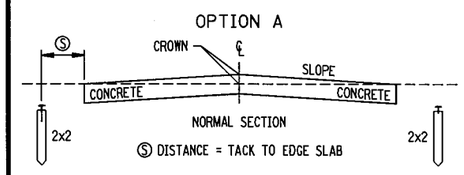

NORMAL SECTION
Ⓢ DISTANCE = TACK TO EDGE SLAB

OPTION B

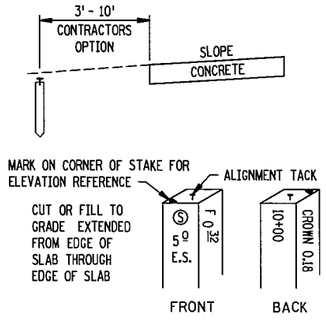

DISCLAIMER

THESE STAKING INFORMATION SHEETS ARE FOR INFORMATION PURPOSES ONLY. STAKING PROCEDURES VARY AND MAY BE SUBJECT TO CHANGE DURING CONSTRUCTION BY CIRCUMSTANCES AND/OR AGREEMENTS BETWEEN SURVEY CREW AND CONTRACTOR.

S.P. 179-020-031 S.P. 019-605-028

STANDARD SHEET NO. 5-297.115 (1 OF 2)	TITLE: STAKING INFORMATION SHEET
STANDARD APPROVED: DECEMBER 21, 1994	

STATE PROJ. NO. 1901-148 (TH 13) SHEET NO. 104 OF 442 SHEETS

PLOTTED/REVISED: 13-JUN-2012 09:37
DISTRICT #: METRO
USER NAME: sl15_2_spn
PATH & FILENAME: Projects/DM_ROS/013/1901/148/Design/PlanSheets/Standard Plans/sl15_2_spn.dgn
FILE NAME: sl15_2_spn

GUARDRAIL (GUARD)

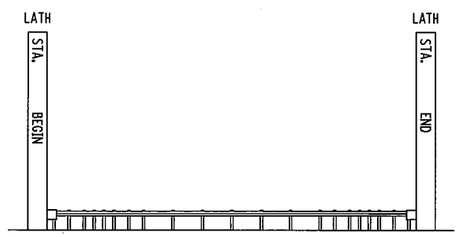

BUILDING (BUILD) FOUNDATION / FOOTING

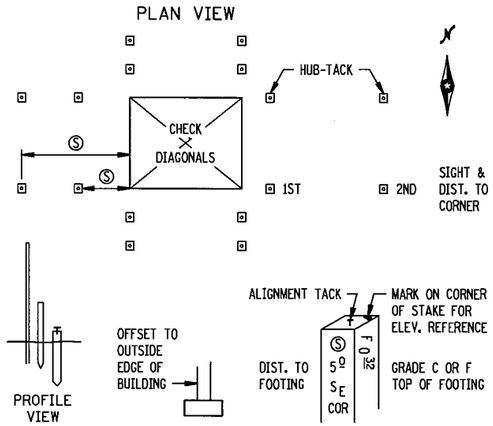

ALIGNMENT POINTS (ALIGN)

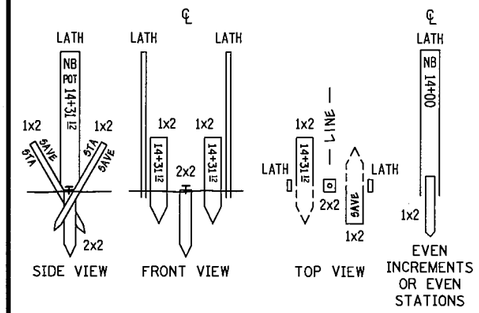

STAKE C = 2" X 2" HUB (LENGTH MAY VARY) SET AS TEMPORARY STAKE. MAY BE REPLACED BY MnDOT MARKER AFTER CONSTRUCTION IS COMPLETED.

SET AT GROUND LEVEL (TEMPORARY CONSTRUCTION STAKE).

TACK SET AT ALIGNMENT POINTS.

STAKE A = GUARD STAKES SET AT ANGLE IN GROUND 6" EACH SIDE OF STAKE D, WITH STATIONING READ WHEN LOOKING UP STATION.

R/W & TEMP. EASEMENT (R/W)

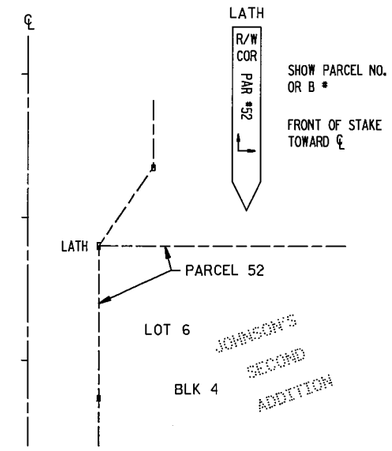

CLEAR & GRUBBING LIMITS (CLEAR) OR MUCK EXCAVATION LIMITS (MUCK)

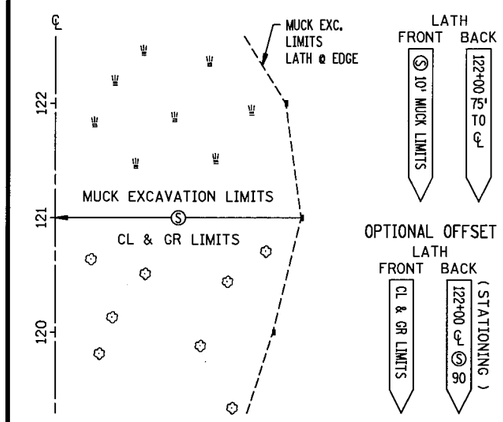

NOTE: FRONT OF LATH GOES TOWARD ℄

OVERHEAD SIGNS (SIGN)

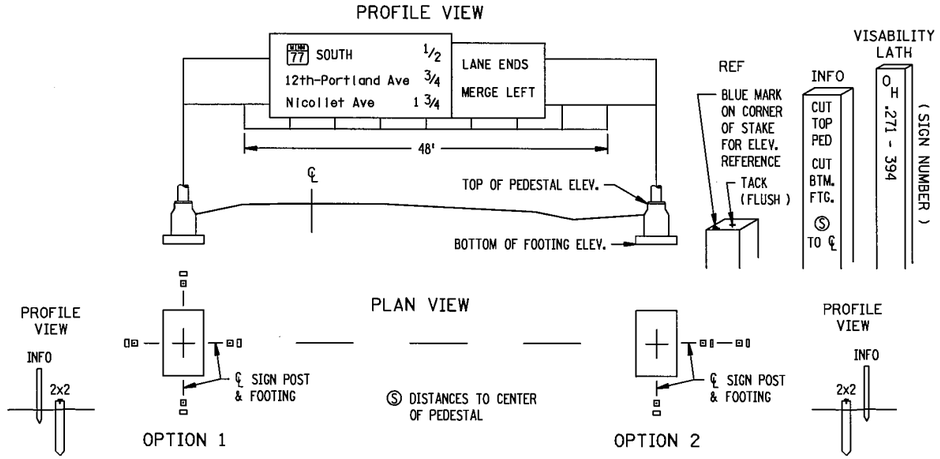

CULVERT

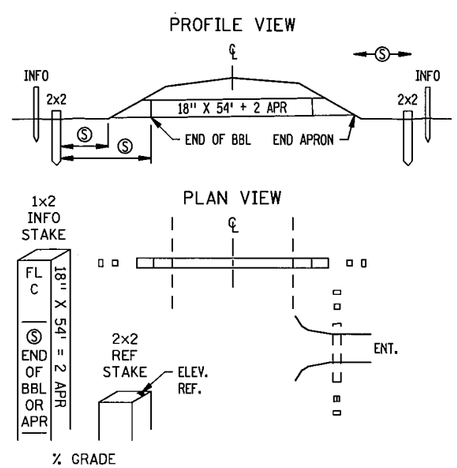

WALL

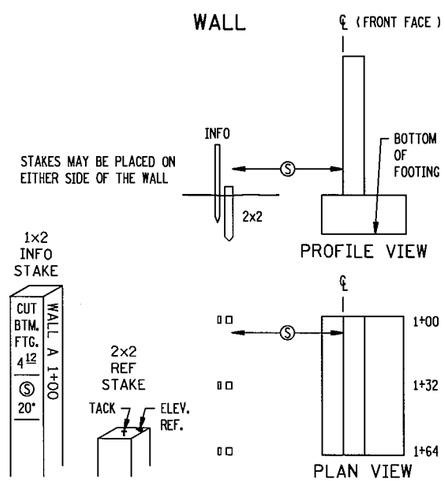

BRIDGESTAKING (BRIDGE)

WORKING POINTS LAYOUT

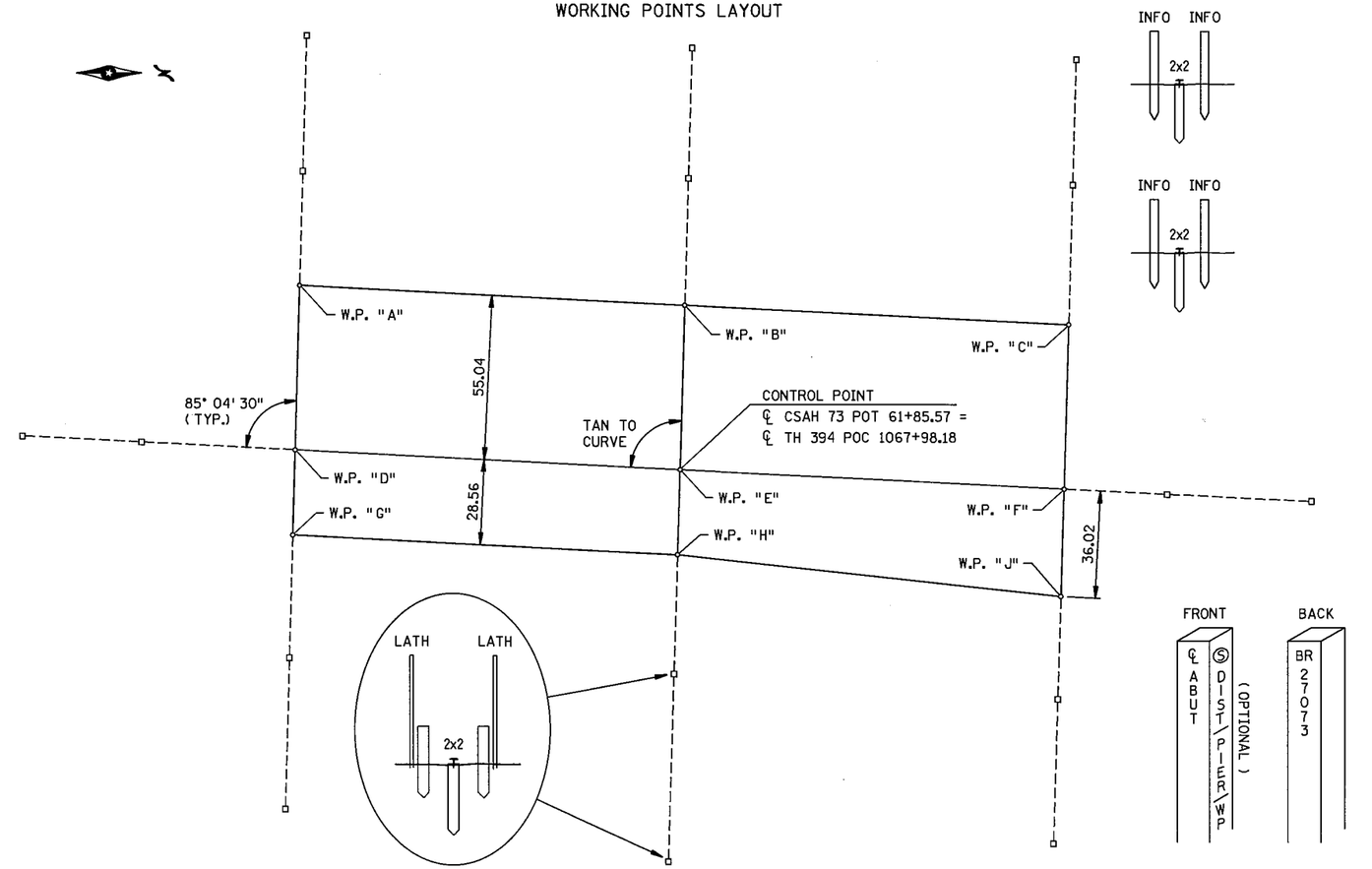

S.P. 179-020-031 S.P. 019-605-028

STANDARD SHEET NO. 5-297.115 (2 OF 2)	TITLE: STAKING INFORMATION SHEET
STANDARD APPROVED: DECEMBER 21, 1994	

STATE PROJ. NO. 1901-148 (TH 13) SHEET NO. 105 OF 442 SHEETS

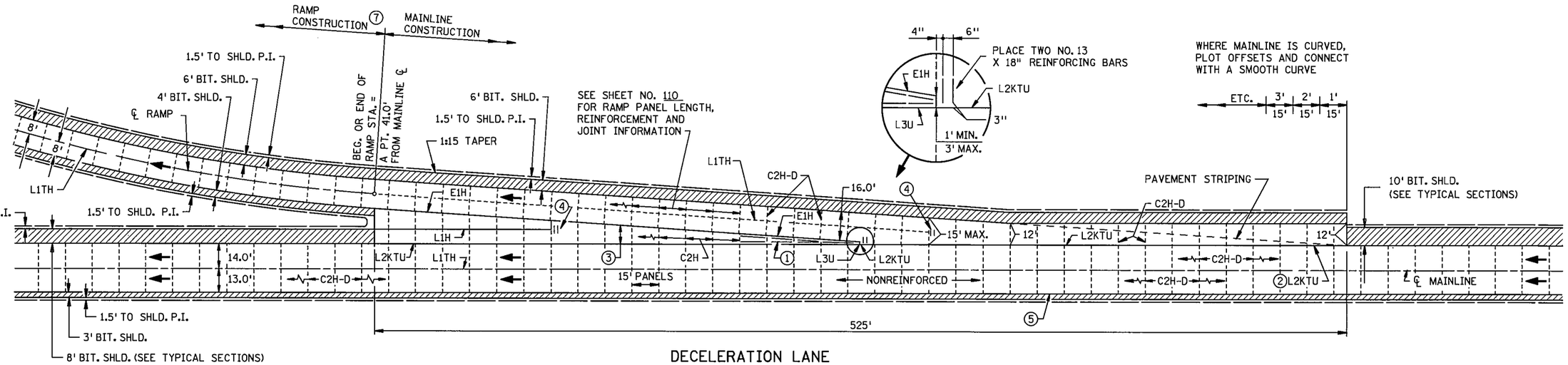

DECELERATION LANE

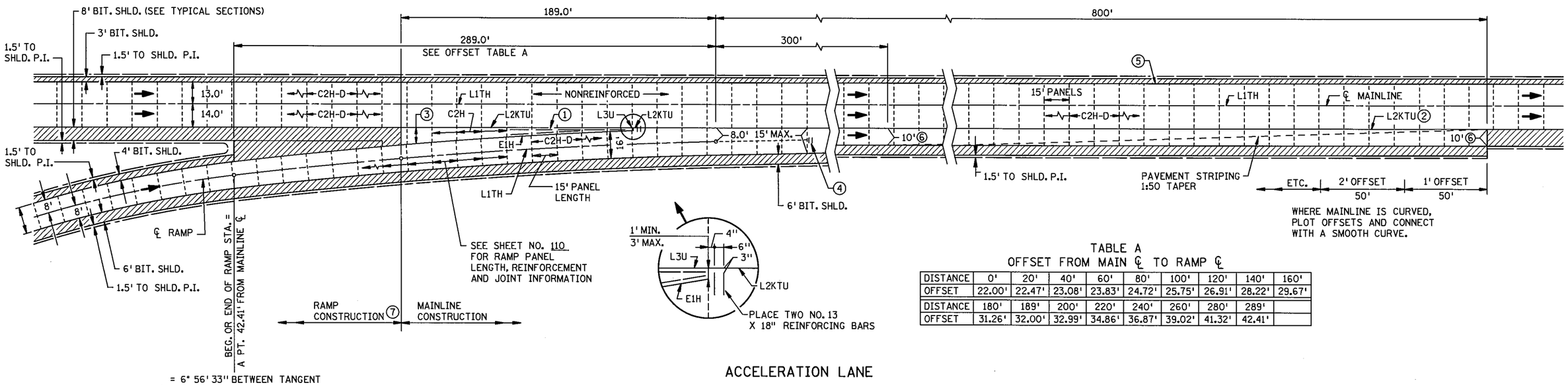

ACCELERATION LANE

TABLE A
OFFSET FROM MAIN ℄ TO RAMP ℄

DISTANCE	0'	20'	40'	60'	80'	100'	120'	140'	160'
OFFSET	22.00'	22.47'	23.08'	23.83'	24.72'	25.75'	26.91'	28.22'	29.67'
DISTANCE	180'	189'	200'	220'	240'	260'	280'	289'	
OFFSET	31.26'	32.00'	32.99'	34.86'	36.87'	39.02'	41.32'	42.41'	

CONSTRUCTION NOTES:

PAVEMENT AND BASE THICKNESS, PANEL LENGTHS, JOINTS AND REINFORCEMENT FOR THE DECELERATION AND ACCELERATION LANES, INCLUDING TAPERS, SHALL BE THE SAME AS THE MAINLINE, EXCEPT WHERE NOTED OTHERWISE.

ALL REINFORCEMENT BARS SHALL BE EPOXY COATED AND COMPLY WITH SPEC. 3301.

LANE AND SHOULDER WIDTHS MAY VARY FROM AS SHOWN. SEE CONSTRUCTION PLANS FOR ACTUAL WIDTHS.

① IN GORE AREAS 6 FEET WIDE OR LESS, MAKE THE PAVEMENT AND BASE THICKNESS THE SAME AS THE MAINLINE. THE ADJACENT MAINLINE C2H-D JOINTS SHALL BE EXTENDED THROUGH THE GORE AREA AS C2H JOINTS. PLACE A NO. 13 REINFORCEMENT BAR 4 INCHES FROM AND ALONG EACH SIDE OF THE GORE TAPER. WHEN GORE AREAS ARE GREATER THAN 6 FEET WIDE, TIE THE MAINLINE TO THE GORE WITH AN L2KTU JOINT.

② WHEN MAINLINE THICKNESS IS LESS THAN 7" USE L2TU JOINTS INSTEAD OF L2KTU JOINTS.

③ CONSTRUCT 15 FOOT PANELS (MAINLINE THICKNESS) WHEN GORE WIDTH IS 6 FEET OR GREATER. THIS AREA SHALL BE SEPARATED FROM OTHER CONCRETE PAVEMENT BY AN E1H JOINT. WHEN THE WIDTH EXCEEDS 15 FEET, CONSTRUCT ONE L1H RELIEF JOINT.

④ PLACE TWO ℄ TIE BARS AT ENDS OF L1H AND L1TH JOINTS AS SHOWN.

⑤ WHEN INSIDE SHOULDERS ARE CONSTRUCTED WITH CONCRETE AN L1TH OR L2KTU JOINT SHALL BE USED.

⑥ IF FUTURE LANE WILL BE ADDED, CHANGE DIMENSION TO 12 FEET AND ADJUST OTHER LONGITUDINAL DIMENSIONS.

⑦ THE MAINLINE THICKNESS SHOULD TRANSITION OVER TWO RAMP PANELS TO THE RAMP THICKNESS.

S.P. 179-020-031 S.P. 019-605-028

STANDARD SHEET NO. 5-297.209	TITLE: ACCELERATION AND DECELERATION LANE (RURAL) RIGID DESIGN MAINLINE JOINTED PAVEMENT 15 FT. PANEL LENGTH
STANDARD APPROVED: APRIL 14, 2010	

STATE PROJ. NO. 1901-148 (TH 13) SHEET NO. 106 OF 442 SHEETS

PLOTTED/REVISED: 13-JUN-2012 09:38
DISTRICT #: METRO
USER NAME: s209_j_spn
PATH & FILENAME: Projects/DM_ROS/013/1901/148/Design/PlanSheets/Standard Plans/s209_j_spndgn
FILE NAME: s209_j_spn

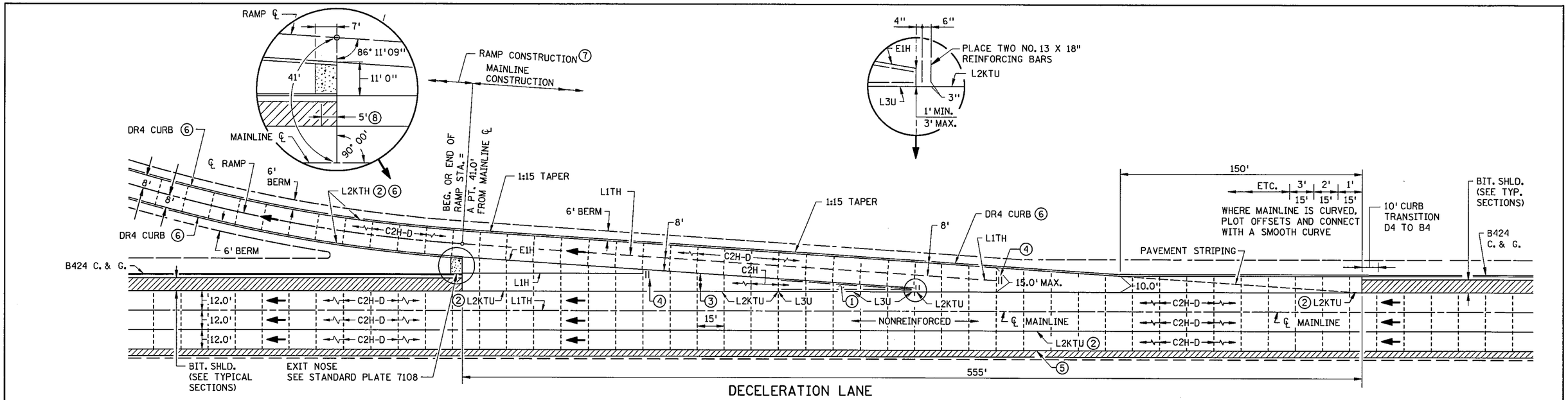

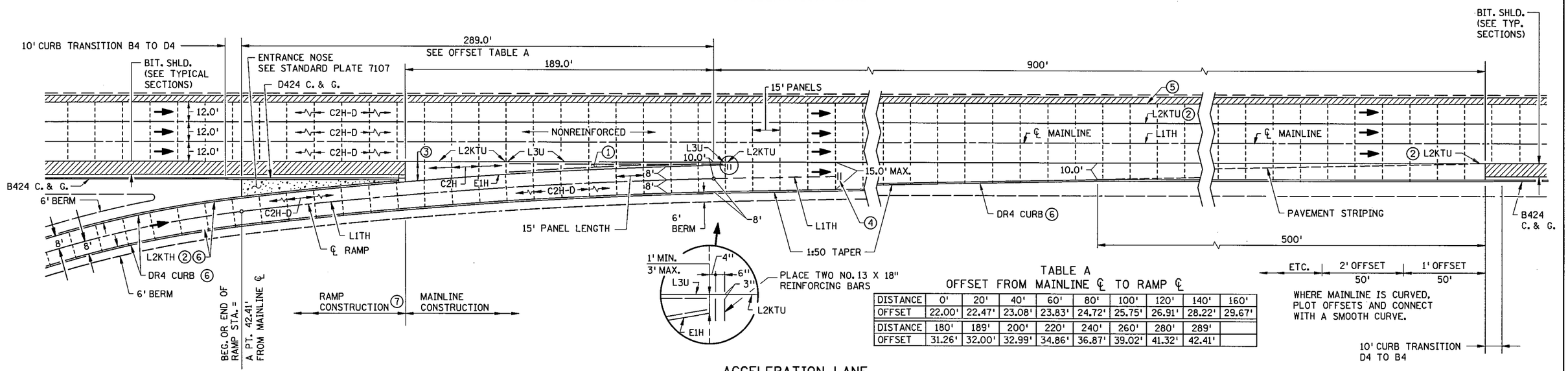

TABLE A
OFFSET FROM MAINLINE ℄ TO RAMP ℄

DISTANCE	0'	20'	40'	60'	80'	100'	120'	140'	160'
OFFSET	22.00'	22.47'	23.08'	23.83'	24.72'	25.75'	26.91'	28.22'	29.67'
DISTANCE	180'	189'	200'	220'	240'	260'	280'	289'	
OFFSET	31.26'	32.00'	32.99'	34.86'	36.87'	39.02'	41.32'	42.41'	

CONSTRUCTION NOTES:

PAVEMENT AND BASE THICKNESS, PANEL LENGTHS, JOINTS AND REINFORCEMENT FOR THE DECELERATION AND ACCELERATION LANES SHALL BE THE SAME AS THE MAINLINE, EXCEPT WHERE NOTED OTHERWISE.

ALL REINFORCEMENT BARS SHALL BE EPOXY COATED AND COMPLY WITH SPEC. 3301.

LANE AND SHOULDER WIDTHS MAY VARY FROM DIMENSIONS SHOWN. SEE CONSTRUCTION PLANS FOR ACTUAL WIDTHS.

(1) THE ADJACENT MAINLINE C2H-D JOINTS SHALL BE EXTENDED THROUGH THE GORE AREA AS C2H JOINTS. PLACE A NO. 13 REINFORCEMENT BAR 4 INCHES FROM AND ALONG EACH EDGE OF THE GORE TAPER. WHEN GORE AREAS ARE GREATER THAN 6 FEET WIDE, TIE THE MAINLINE TO THE GORE WITH AN L2KTU JOINT.

(2) WHEN RAMP THICKNESS IS LESS THAN 7" USE L2TH JOINTS INSTEAD OF L2KTH JOINTS.

(3) CONSTRUCT 15 FOOT PANELS (MAINLINE THICKNESS) WHERE GORE WIDTH IS 6 FEET OR GREATER. WHERE THE WIDTH EXCEEDS 15 FEET, CONSTRUCT ONE L1H RELIEF JOINT.

(4) PLACE TWO ℄ TIE BARS AT ENDS OF L1H AND L1TH JOINTS AS SHOWN.

(5) WHEN INSIDE SHOULDERS ARE CONSTRUCTED WITH CONCRETE, CONSTRUCT A L2KTU JOINT.

(6) THE CONTRACTOR SHALL HAVE THE OPTION TO CONSTRUCT INTEGRANT CURB IN PLACE OF DR4 CURB WITH L2KTH JOINT. PAYMENT WILL BE BASED ON THE DR4 CURB OPTION, REGARDLESS OF THE METHOD OF CONSTRUCTION USED.

(7) THE MAINLINE THICKNESS SHOULD TRANSITION OVER TWO RAMP PANELS TO THE RAMP THICKNESS.

(8) WHEN CONSTRUCING CURB AND GUTTER, SLOPE FROM 0" TO 4" CURB.

S.P. 179-020-031 S.P. 019-605-028

STANDARD SHEET NO. 5-297.210	TITLE: ACCELERATION AND DECELERATION LANE (URBAN) RIGID DESIGN MAINLINE JOINTED PAVEMENT 15 FT. PANEL LENGTH
STANDARD APPROVED: JUNE 15, 2011	

STATE PROJ. NO. 1901-148 (TH 13) SHEET NO. 107 OF 442 SHEETS

PLOTTED/REVISED: 13-JUN-2012 09:39
DISTRICT #: METRO
USER NAME: s210_J_spn
PATH & FILENAME: Projects/DM_ROS/013/1901/148/Design/PlanSheets/Standard Plans/s210_J_spndgn
FILE NAME: s210_J_spn

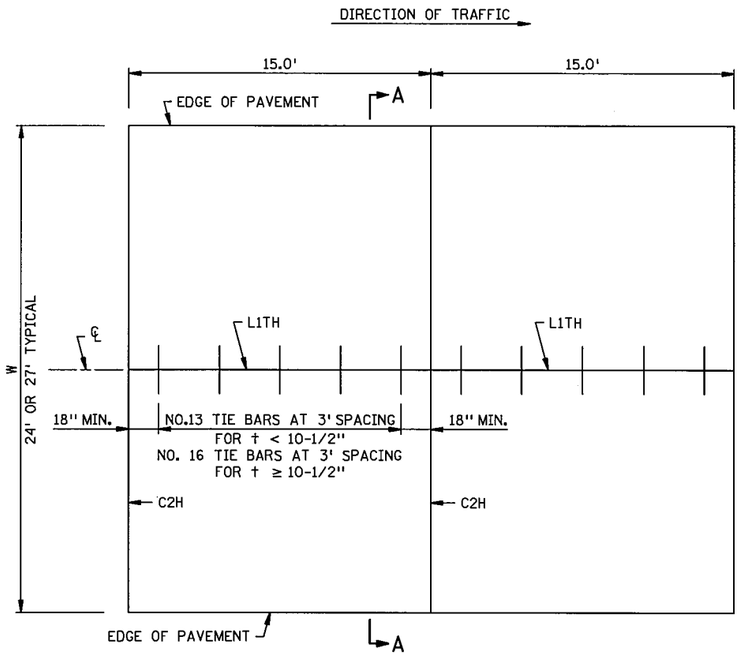

MAINLINE PAVEMENT
UNDOWELED

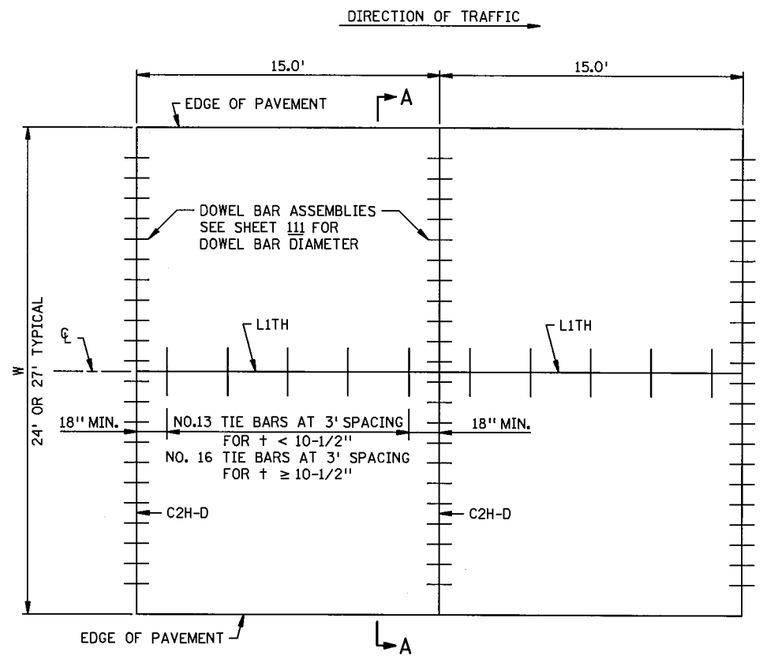

MAINLINE PAVEMENT
DOWELED

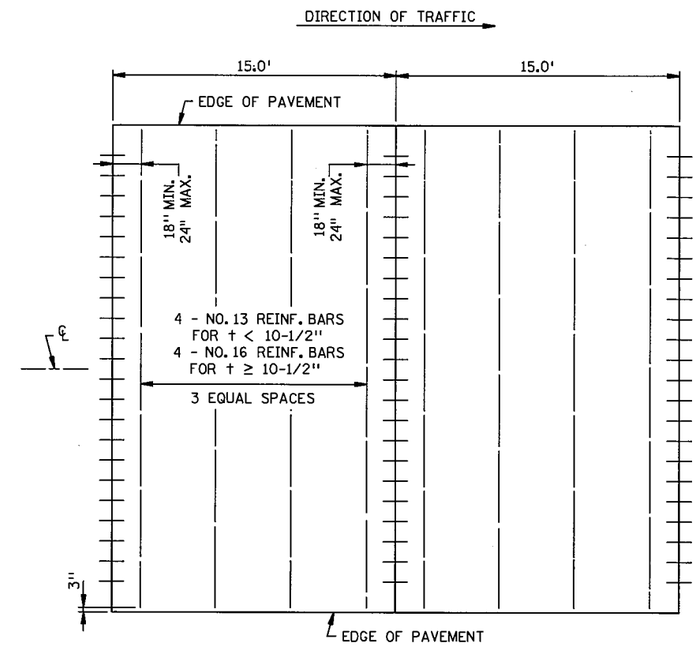

PANEL REINFORCEMENT

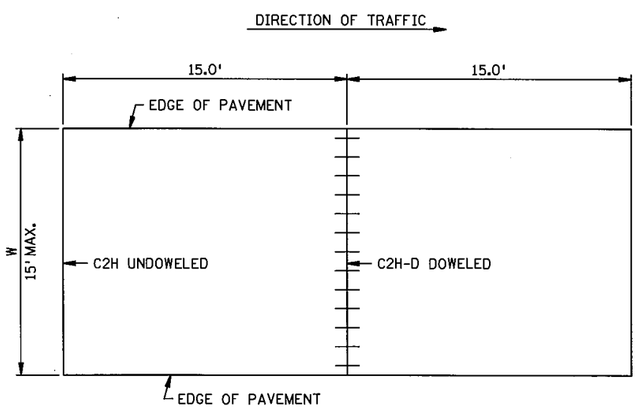

PAVEMENT 2 FT. THRU 15 FT. WIDTH
UNDOWELED OR DOWELED

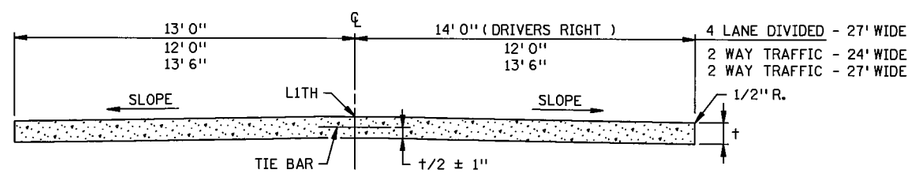

SECTION A-A

GENERAL NOTES:

ALL REBARS ARE IN METRIC DESIGNATIONS

SEE TYPICAL SECTIONS AND PLAN SHEETS FOR CROSS SLOPES AND PAVEMENT THICKNESS, †.

DOWEL BAR ASSEMBLIES, WHEN REQUIRED, SHALL BE SIMILAR TO THOSE SHOWN ON STANDARD PLATE 1103.

ALL REINFORCING BARS SHALL BE EPOXY COATED AND COMPLY WITH SPEC 3301.

FOR SUPPLEMENTAL PAVEMENT REINFORCEMENT, SEE STANDARD PLATE 1070.

PANEL REINFORCEMENT:
PLACE IN PANELS WHERE PAVEMENT WIDTH EXCEEDS 15.0' WITHOUT A LONGITUDINAL JOINT. PLACEMENT DEPTH SHALL BE PLANNED †/2 ± 1". IT IS PREFERRED TO ADD A LONGITUDIDNAL JOINT RATHER THAN PAVE GREATER THAN 15' IN WIDTH.

S.P. 179-020-031 S.P. 019-605-028

STANDARD SHEET NO. 5-297.217 (1 OF 2)	TITLE: CONCRETE MAINLINE PAVEMENT 15.0 FT. PANEL LENGTH RURAL
STANDARD APPROVED: APRIL 14, 2010	

STATE PROJ. NO. 1901-148 (TH 13) SHEET NO. 108 OF 442 SHEETS

PLOTTED/REVISED: 13-JUN-2012 09:41
DISTRICT #: METRO
USER NAME: s217_J_spn
PATH & FILENAME: Projects/DM_ROS/013/1901/148/Design/PlanSheets/Standard Plans/s217_J_spn.dgn
FILE NAME: s217_J_spn

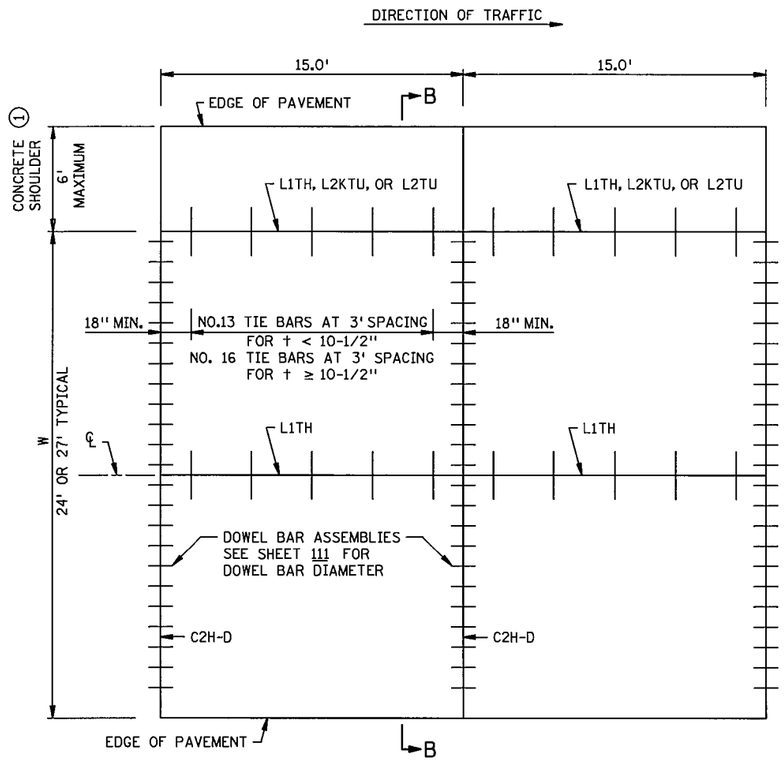

MAINLINE PAVEMENT WITH
INSIDE CONCRETE SHOULDER

DOWELED

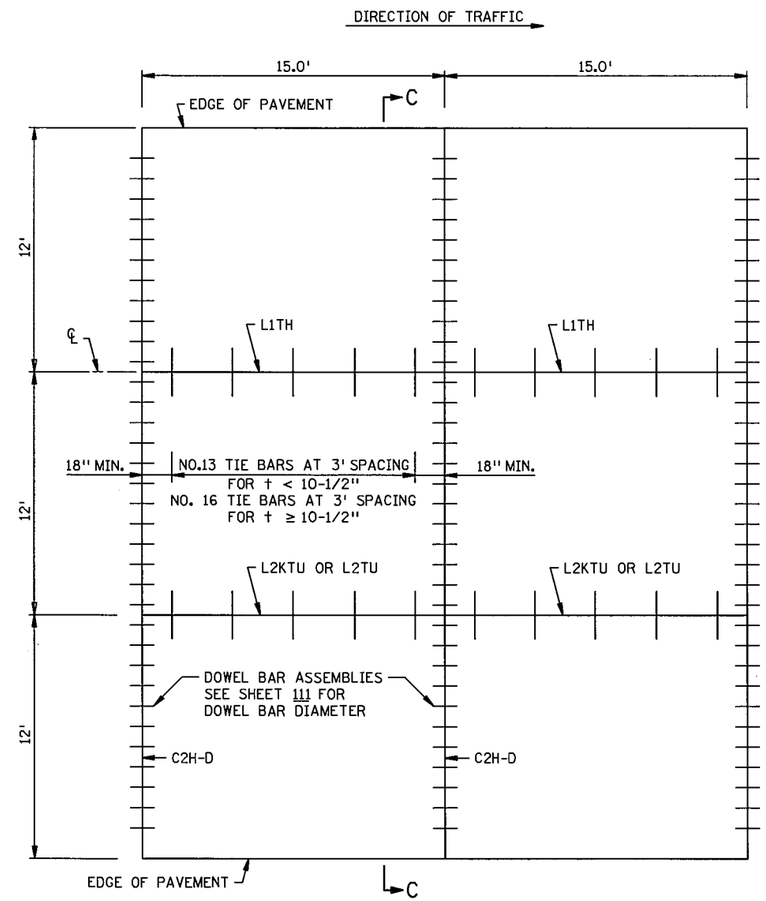

MAINLINE PAVEMENT URBAN

DOWELED

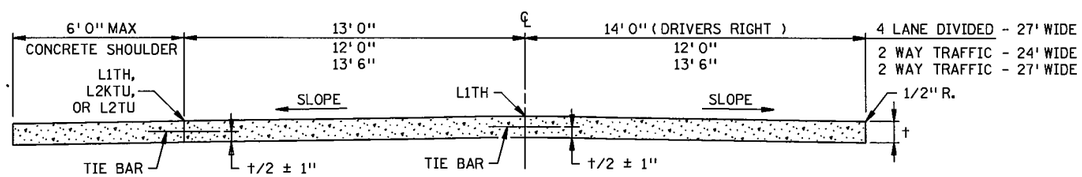

SECTION B-B

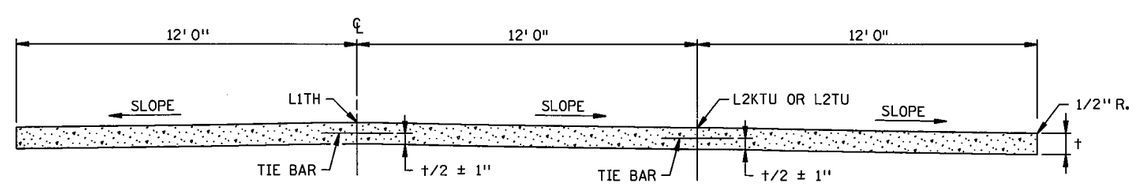

SECTION C-C

GENERAL NOTES:

ALL REBARS ARE IN METRIC DESIGNATIONS

SEE TYPICAL SECTIONS AND PLAN SHEETS FOR CROSS SLOPES AND PAVEMENT THICKNESS, †.

DOWEL BAR ASSEMBLIES, WHEN REQUIRED, SHALL BE SIMILAR TO THOSE SHOWN ON STANDARD PLATE 1103.

ALL REINFORCING BARS SHALL BE EPOXY COATED AND COMPLY WITH SPEC. 3301.

FOR SUPPLEMENTAL PAVEMENT REINFORCEMENT, SEE STANDARD PLATE 1070.

① CONTACT THE CONCRETE ENGINEER TO DISCUSS WHETHER TIE BARS AND SAWED JOINTS ARE NEEDED BASED ON CONCRETE SHOULDER WIDTH AND DEPTH.

S.P. 179-020-031 S.P. 019-605-028

STANDARD SHEET NO. 5-297.217 (2 OF 2)	TITLE: CONCRETE MAINLINE PAVEMENT 15.0 FT. PANEL LENGTH URBAN OR CONCRETE SHOULDERS
STANDARD APPROVED: APRIL 14, 2010	

PLOTTED/REVISED: 13-JUN-2012 09:42
DISTRICT #: METRO
USER NAME: s217_2_spn
PATH & FILENAME: Projects/DM_ROS/013/1901/148/Design/PlanSheets/Standard Plans/s217_2_spn.dgn
FILE NAME: s217_2_spn

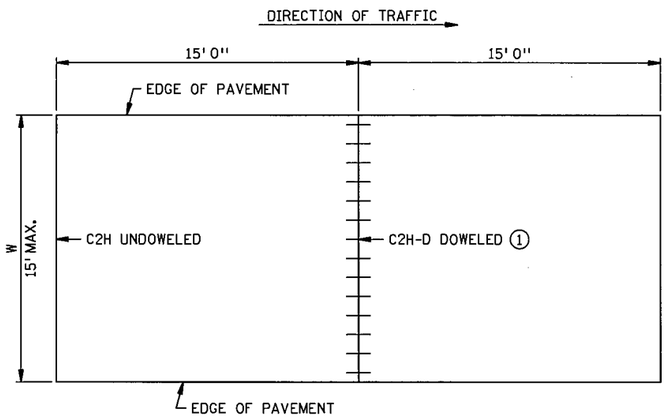

RAMP PAVEMENT 1 FT. THRU 15 FT. WIDTH

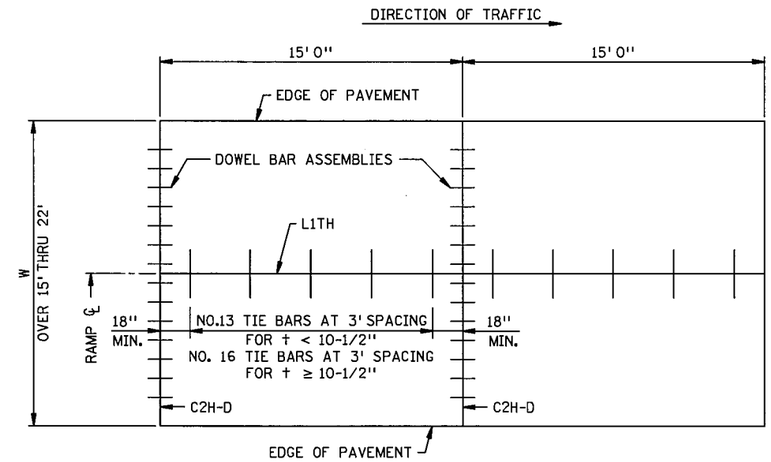

RAMP PAVEMENT OVER 15 FT. THRU 22 FT. WIDTH
DOWELED

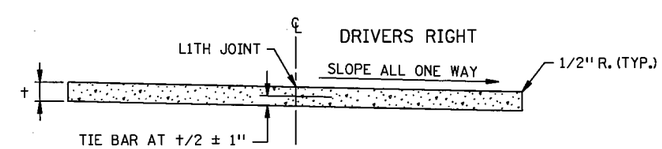

RURAL DESIGN RAMP
CROSS SECTION

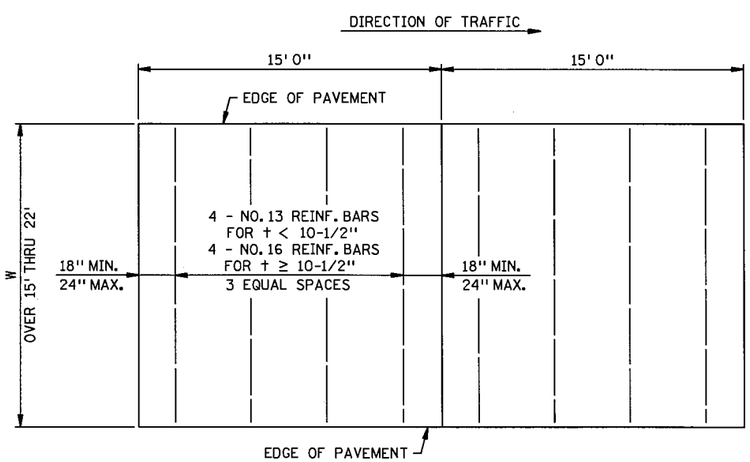

PANEL REINFORCEMENT
PANELS OVER 15 FT. THRU 22 FT. WIDTHS
IT IS PREFERRED TO ADD A LONGITUDINAL JOINT
RATHER THAN PAVE GREATER THAN 15 FT. IN WIDTH.
PLACEMENT DEPTH SHALL BE PLANNED †/2 ± 1"

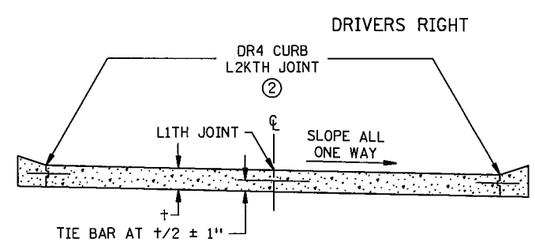

URBAN DESIGN RAMP
CROSS SECTION

NOTES:

ALL REBARS ARE IN METRIC DESIGNATIONS

WHEN RAMP THICKNESS IS LESS THAN 7", USE L2TH JOINTS INSTEAD OF L2KTH JOINTS.

DOWEL BAR ASSEMBLIES, WHEN REQUIRED, SHALL BE SIMILAR TO THOSE SHOWN ON STANDARD PLATE 1103.

SEE TYPICAL SECTIONS AND PLAN SHEETS FOR CROSS SLOPES AND PAVEMENT THICKNESS, †.

ALL REINFORCING BARS SHALL BE EPOXY COATED AND COMPLY WITH SPEC. 3301.

FOR SUPPLEMENTAL PAVEMENT REINFORCEMENT, SEE STANDARD PLATE 1070.

1 DOWELS USED WHEN PAVEMENT WIDTH IS GREATER THAN OR EQUAL TO 4'.

2 THE CONTRACTOR SHALL HAVE THE OPTION TO CONSTRUCT INTEGRANT CURBS IN PLACE OF DR4 CURB WITH L2KTH JOINTS. IN EITHER OPTION, DOWEL BAR ASSEMBLIES WILL NOT BE REQUIRED IN THE CURB AREA. PAYMENT WILL BE BASED ON THE DR4 CURB OPTION, REGARDLESS OF THE METHOD OF CONSTRUCTION USED. DR4 JOINTS SHALL BE SEALED.

S.P. 179-020-031 S.P. 019-605-028

STANDARD SHEET NO. 5-297.219	TITLE: CONCRETE RAMP/LOOP PAVEMENT 15 FT. PANEL LENGTH
STANDARD APPROVED: JUNE 15, 2011	

STATE PROJ. NO. 1901-148 (TH 13) SHEET NO. 110 OF 442 SHEETS

PLOTTED/REVISED: 13-JUN-2012 09:43
DISTRICT #: METRO
USER NAME: s219_l_spn
PATH & FILENAME: Projects/DM_ROS/013/1901/148/Design/PlanSheets/Standard Plans/s219_l_spn.dgn
FILE NAME: s219_l_spn

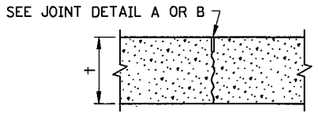

C1U & C2H

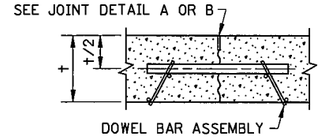

C1U-D & C2H-D

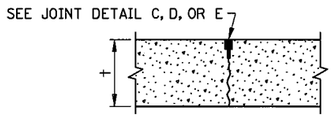

C3P, C4S, C5H

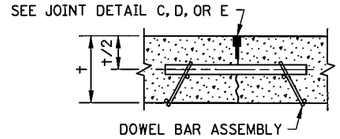

C3P-D, C4S-D, C5H-D

CONTRACTION JOINT REFERENCE, DETAIL & SEALER SPEC. TABLE

JOINT REFERENCE		JOINT DETAIL	JOINT SEALER SPEC.	JOINT WIDTH
WITHOUT DOWELS	WITH DOWELS			
C1U	C1U-D	A	UNSEALED	1/8"
C2H	C2H-D	B	3725	1/8"
C3P	C3P-D	C	3721	3/8"
C4S	C4S-D	D	3722	3/8"
C5H	C5H-D	E	3725	3/8"

LEGEND — EXAMPLE: C2H-D

- C = CONTRACTION JOINT
- NO. = JOINT REFERENCE
- U = UNSEALED
- H = HOT POURED
- P = PREFORMED
- S = SILICONE
- -D = DOWEL BARS

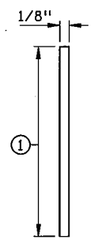

JOINT DETAIL A
SAWED & UNSEALED

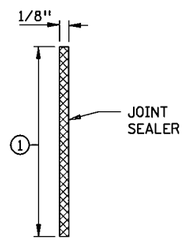

JOINT DETAIL B ③
SAWED & SEALED

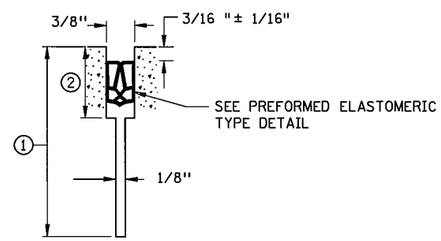

JOINT DETAIL C ③
SAWED AND SEALED

DOWEL BAR DIAMETER TABLE

PAVEMENT THICKNESS †	DOWEL BAR DIAMETER
LESS THAN 6"	NONE
6" - 6 1/2"	1"
7" - 10"	1 1/4"
10 1/2" - 14"	1 1/2"

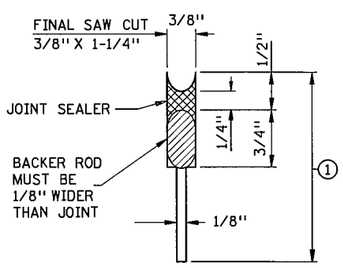

JOINT DETAIL D ③④
SAWED AND SEALED

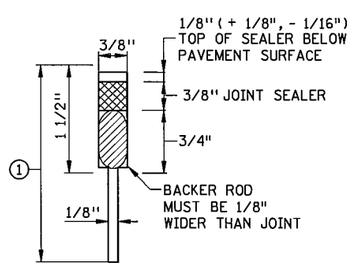

JOINT DETAIL E ③⑤
SAWED AND SEALED

REQUIRED DIMENSIONS

JOINT TYPE	TRANSVERSE
NOMINAL SEALER SIZE	11/16" USE IN ALL 3/8" JOINTS
a	0.69" + 0.13" - 0.05"
b	0.08" ± 0.02"
c	0.25" MIN.
d	0.63" MIN.

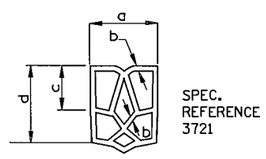

TYPICAL SHAPE FOR SATISFACTORY INSTALLATION IN JOINT (5 CELL MIN.)

PREFORMED ELASTOMERIC TYPE DETAIL

NOTES:

SEE STANDARD PLATE 1103 FOR DOWEL BAR ASSEMBLY.

SEE STANDARD PLATE 1150 FOR CONSTRUCTION OF HEADER JOINTS.

JOINT WIDTH TOLERANCE IS + 1/16" TO - 1/32"

FURNISH AND INSTALL ALL JOINT SEALER IN ACCORDANCE WITH THE MANUFACTURER'S RECOMMENDATIONS.

SEE STANDARD PLANS 5-297.217 AND 5-297.219, FOR CONCRETE MAINLINE/RAMP PAVEMENT.

SEE PAVING LAYOUTS IN THE PLANS FOR JOINT CLASS DESIGNATION TO BE USED AND SPECIAL REINFORCEMENT REQUIRED.

① JOINT DEPTH SHALL BE:
FOR CONCRETE OVERLAYS - 1/3 THE PAVEMENT THICKNESS
FOR CONCRETE PAVEMENT - 1/4 THE PAVEMENT THICKNESS

② SEE CONTRACTION JOINT SEALER DETAIL. WHEN USING PREFORMED JOINT SEALER, THE DEPTH SHALL BE 1/4" MORE THAN THE PREFORMED SEALER, WHEN COMPRESSED, TO FIT THE JOINT DESIGN WIDTH. "d" DIMENSION SHALL APPLY AT ANY POINT THROUGHOUT "c" DEPTH. SHARP INTERNAL CORNERS WILL NOT BE PERMITTED. ALL CORNERS SHALL BE PROVIDED WITH SUITABLE FILLET.

③ WHEN SEALING, THE JOINT FACES SHALL BE CLEANED AND DRIED BY SANDBLASTING AND AIR BLASTING.

④ PRIOR TO SEALING THE JOINT, A 1/2" DIA. CLOSED CELL BACKER ROD SHALL BE PLACED SUCH THAT THE TOP OF THE BACKER ROD IS 1/2" BELOW THE SURFACE OF THE PAVEMENT. NON SELF-LEVELING SILICONE SHALL BE TOOLED INTO THE JOINT MAINTAINING A SEAL AND BEAD THICKNESS OF 1/4".

⑤ PRIOR TO SEALING THE JOINT, A 1/2" DIA. CLOSED CELL BACKER ROD CAPABLE OF WITHSTANDING SEALANT TEMPERATURES OF 400 DEGREES F. SHALL BE PLACED 1/2" BELOW THE TOP OF PAVEMENT.

CONTRACTION JOINTS
DESIGN C

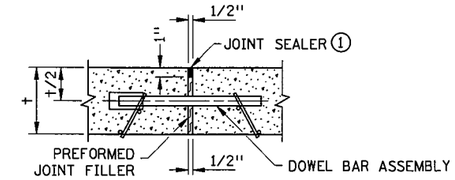

E1H-D (W/DOWELS) E1H (W/O DOWELS)

JOINT DETAIL A

EXPANSION JOINT REFERENCE, DETAIL & SEALER SPEC. TABLE

JOINT REFERENCE		JOINT DETAIL	JOINT SEALER SPEC.	JOINT WIDTH
WITHOUT DOWELS	WITH DOWELS			
E1H	E1H-D	A	3725	1/2"
E2H	E2H-D	B	3725	1"
E4H		C	3725	2"
	E4H-D	D	3725	2"
E8H		STANDARD PLAN 5-297.229	3725	4"

LEGEND — EXAMPLE: E4H-D

- E = EXPANSION JOINT
- NO. = JOINT REFERENCE
- H = HOT POURED
- -D = DOWEL BARS

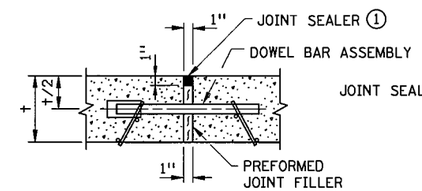

E2H-D (W/DOWELS) E2H (W/O DOWELS)

JOINT DETAIL B

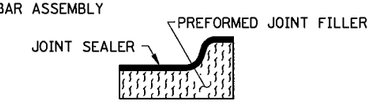

SECTION THRU CURB

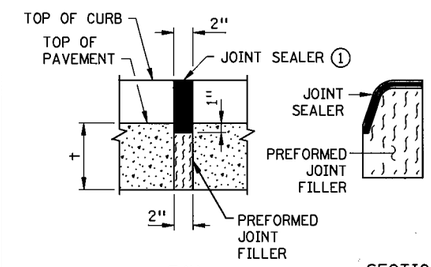

E4H (W/O DOWELS)

SECTION THRU CURB

JOINT DETAIL C

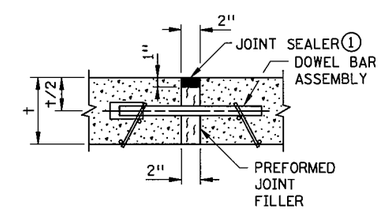

E4H-D (W/DOWELS)

JOINT DETAIL D

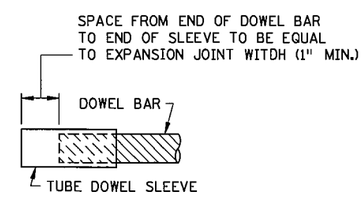

DOWEL BAR SLEEVE DETAIL

NOTES:

PREFORMED JOINT FILLER MATERIAL, SPEC. 3702.

FOR DOWEL BAR ASSEMBLY, SEE STANDARD PLATE 1103.

① JOINT SEALER SPEC. 3725. THE JOINT FACES SHALL BE CLEANED AND DRIED BY SANDBLASTING AND AIR BLASTING. TOP OF SEALER, FLUSH TO 1/8" BELOW TOP OF PAVEMENT SURFACE. MAKE TOP OF SEALER FOR CURB SECTION D JOINTS FLUSH WITH SURFACE ±1/8".

EXPANSION JOINTS
DESIGN E

S.P. 179-020-031 S.P. 019-605-028

STANDARD SHEET NO.	TITLE:
5-297.221 (1 OF 2)	PAVEMENT JOINTS
STANDARD APPROVED: APRIL 14, 2010	CONTRACTION (DESIGN C) AND EXPANSION (DESIGN E)

PLOTTED/REVISED: 13-JUN-2012 09:44
DISTRICT #: METRO
USER NAME: s221_l_spn
PATH & FILENAME: Projects/DM_ROS/013/1901/148/Design/PlanSheets/Standard Plans/s221_l_spndgn
FILE NAME: s221_l_spn

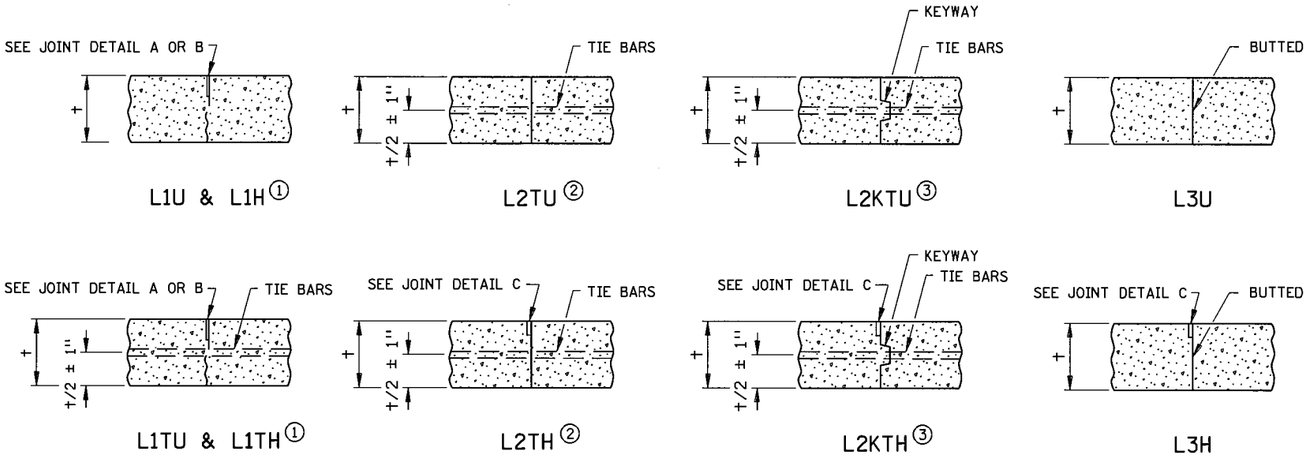

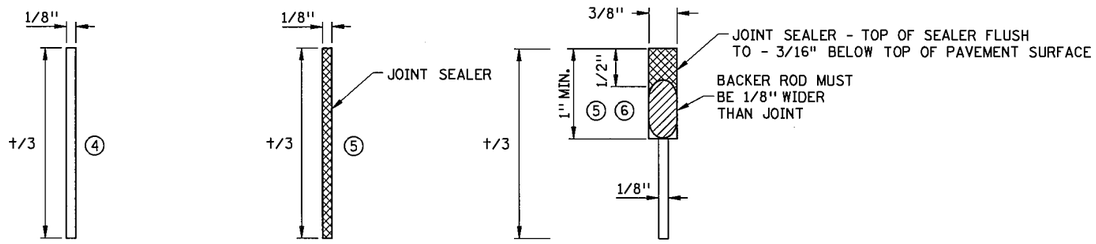

JOINT DETAIL A
SAWED & UNSEALED

JOINT DETAIL B
SAWED & SEALED

JOINT DETAIL C
SAWED & SEALED

TIEBAR TABLE

PAVEMENT THICKNESS	TIEBAR SIZE	LENGTH
< 10-1/2"	NO. 13	30"
≥ 10-1/2"	NO. 16	36"
ALL THICKNESS WHEN TYING TO CURB AND GUTTER	NO. 13	30"

ALL REBARS ARE IN METRIC DESIGNATIONS

THE TIE BAR SPACING FOR ALL L2T AND L2KT JOINTS SHALL BE 3'-0" CENTER TO CENTER AND BENT 60° AS SHOWN, EXCEPT WHEN NOTED OTHERWISE IN THE PLANS.

TIE BARS IN THE L2T AND L2KT JOINTS SHALL BE THE SAME SIZE AND LENGTH AS USED FOR THE L1T JOINTS, WHEN TYING PAVEMENT TO PAVEMENT. TIE BARS IN THE L2KT JOINTS SHALL BE NO. 13 X 2' - 6", WHEN TYING CURB & GUTTER TO PAVEMENT.

ALL TIE BARS SHALL BE EPOXY COATED AND COMPLY WITH SPEC. 3301.

LONGITUDINAL JOINT REFERENCE, DETAIL & SEALER SPECIFICATION TABLE

JOINT REFERENCE			JOINT DETAIL	JOINT SEALER SPEC	JOINT WIDTH
WITHOUT TIE BARS	WITH TIE BARS	WITH KEYWAY & TIE BARS			
L1U	L1TU		A	UNSEALED	1/8"
L1H	L1TH		B	3725	1/8"
	L2TU	L2KTU	NONE	UNSEALED	
	L2TH	L2KTH	C	3725	3/8"
L3U			NONE	UNSEALED	
L3H			C	3725	3/8"

LEGEND — EXAMPLE: L2KTH

- L = LONGITUDINAL JOINT
- NO. = JOINT REFERENCE
- 1 = PAVED CONSTRUCTION JOINT
- 2 = TIED/KEYED CONSTRUCTION JOINT
- 3 = BUTTED CONSTRUCTION JOINT
- K = KEYWAY
- T = TIE BARS
- U = UNSEALED
- H = HOT POURED

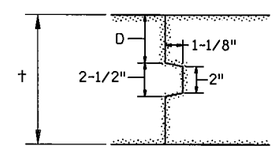

PAVEMENT KEYWAY DETAIL

KEYWAY DIMENSION TABLE

t PAVEMENT THICKNESS	D (TOLERANCE ± 1/4")
< 7"	NO KEYWAY
7" TO 7-1/2"	3"
8" TO 10"	4"
≥ 10-1/2"	5"

KEYWAY (1-1/8" x 2" x 2-1/2") MAY BE FORMED WITH MOLD OR METAL FORM. OTHER APPROVED KEYWAY SHAPES GIVING EQUIVALENT CONSTRUCTION FEATURES MAY BE USED WITH APPROVAL OF THE ENGINEER.

NOTES:

NORMALLY, TIED PAVEMENT WIDTHS SHALL NOT EXCEED FOUR LANES, EXCEPT BRIDGE APPROACH PANELS AND PAVEMENT TAPERS.

JOINT WIDTH TOLERANCE IS + 1/16 IN. TO - 1/32 IN.

FURNISH AND INSTALL ALL JOINT SEALER IN ACCORDANCE WITH THE MANUFACTURER'S RECOMMENDATIONS.

TIED/KEYED AND BUTTED CONSTRUCTION JOINTS SHALL BE UNSEALED EXCEPT AS OTHERWISE NOTED IN THE PLAN OR REQUIRED BY THE ENGINEER.

SEE STANDARD PLANS 5-297.217 AND 5-297.219 FOR CONCRETE MAINLINE AND RAMP PAVEMENT.

SEE PAVING LAYOUTS IN THE PLANS FOR JOINT CLASS DESIGNATIONS TO BE USED AND SPECIAL REINFORCEMENT REQUIRED.

WHEN CURB AND GUTTER IS PLACED ADJACENT TO CONCRETE MAINLINE, THE TIEBARS SHALL BE PLACED A MINIMUM OF 2" ABOVE THE CURB AND GUTTER GRADE.

① SEE THE LONGITUDINAL JOINT REFERENCE, DETAIL & SEALER SPECIFICATION TABLE TO DETERMINE JOINT DETAIL.

② CONCRETE PAVEMENTS LESS THAN 7" SHALL USE L2TU AND L2TH JOINTS UNLESS OTHERWISE ALLOWED BY THE ENGINEER.

③ CONCRETE PAVEMENTS GREATER THAN OR EQUAL TO 7" SHALL USE L2KTU AND L2KTH JOINTS UNLESS OTHERWISE ALLOWED BY THE ENGINEER.

④ THE JOINT FACES SHALL BE CLEANED WITH WATER DURING THE SAW CUTTING OPERATION OR BY WATER BLASTING AFTER SAWING.

⑤ THE JOINT FACES SHALL BE CLEANED AND DRIED BY SANDBLASTING AND AIR BLASTING.

⑥ PRIOR TO SEALING THE JOINT, A 1/2" DIAMETER CLOSED CELL BACKER ROD CAPABLE OF WITHSTANDING SEALANT TEMPERATURES OF 400 DEGREES F. SHALL BE PLACED 1/2" BELOW THE TOP OF THE PAVEMENT.

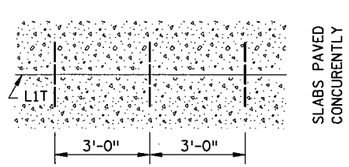

L1T PAVING DETAIL

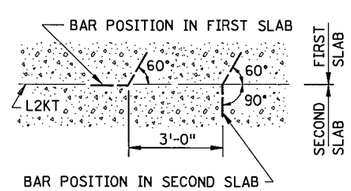

L2T & L2KT TIE BAR BENDING AND PAVING DETAIL

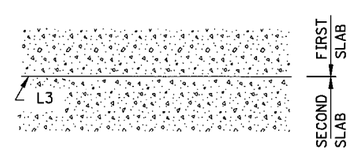

L3 PAVING DETAIL

S.P. 179-020-031 S.P. 019-605-028

STANDARD SHEET NO. 5-297.221 (2 OF 2)	TITLE: PAVEMENT JOINTS LONGITUDINAL (DESIGN L)
STANDARD APPROVED: APRIL 14, 2010	

STATE PROJ. NO. 1901-148 (TH 13) SHEET NO. 112 OF 442 SHEETS

PLOTTED/REVISED: 13-JUN-2012 09:44
DISTRICT #: METRO
USER NAME: s221_2_spn
PATH & FILENAME: Projects/DM_ROS/013/1901/148/Design/PlanSheets/Standard Plans/s221_2_spn.dgn
FILE NAME: s221_2_spn

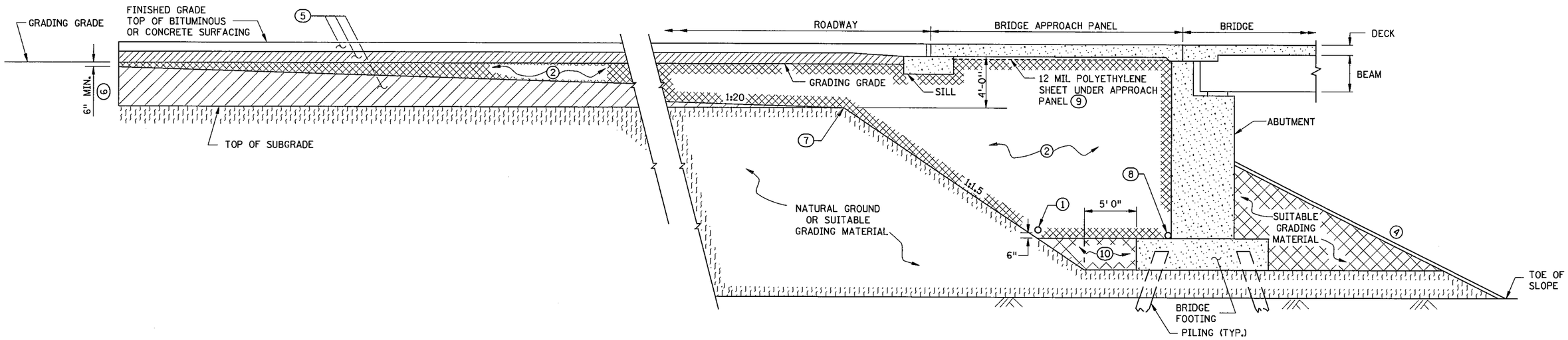

ELEVATION

FINISHED GRADING SECTION
(HIGH ABUTMENT ON PILING SHOWN)
(AFTER ABUTMENT HAS BEEN CONSTRUCTED)

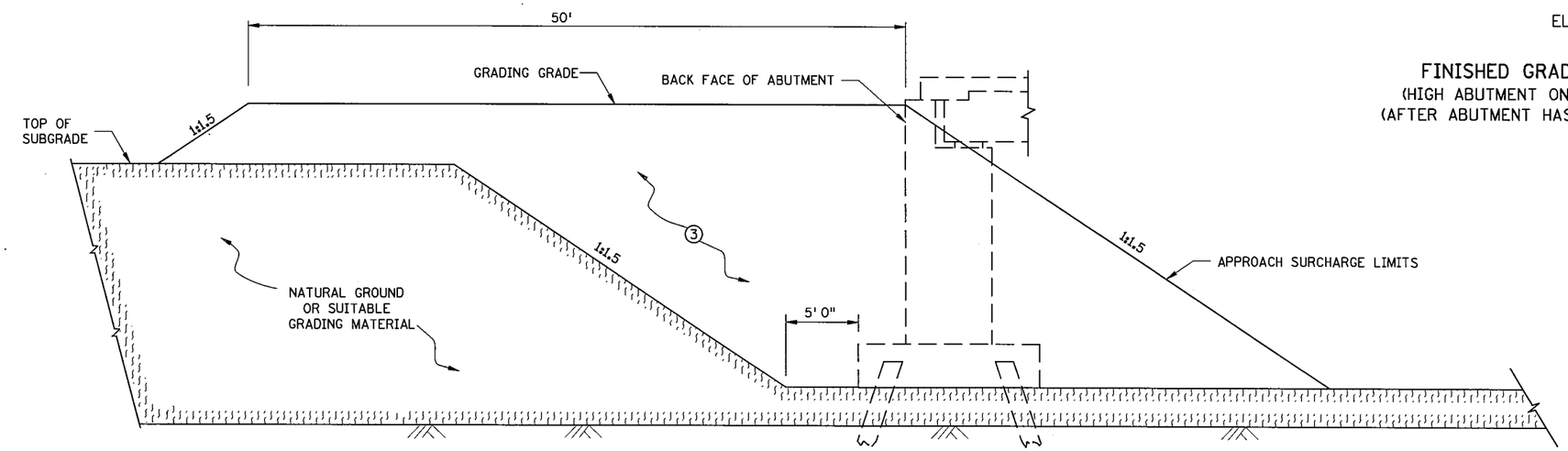

ELEVATION

ROUGH GRADING SECTION
(PRIOR TO ABUTMENT CONSTRUCTION)

NOTES:

1. SUBSURFACE PIPE DRAIN. SEE GRADING PLAN FOR DETAILS. FURNISH AND INSTALL IF SHOWN IN GRADING PLAN.
2. QUANTITY OF SELECT GRANULAR MATERIAL MODIFIED 10% IS BASED ON DIMENSIONS SHOWN, AND PAYMENT IS BASED ON THIS QUANTITY. SELECT GRANULAR MATERIAL MODIFIED 10% SHALL COMPLY WITH SPEC. 3149.2B2, MODIFIED TO 10% OR LESS PASSING THE NUMBER 200 SIEVE. SEE GRADING PLAN FOR QUANTITY. IF THE CONTRACTOR CHOOSES TO INCREASE DIMENSIONS IN ORDER TO FACILITATE CONSTRUCTION OPERATIONS, ANY QUANTITY INCREASES SHALL BE CONSIDERED INCIDENTAL.
3. PLACE ABUTMENT APPROACH SURCHARGE MATERIAL PRIOR TO ABUTMENT CONSTRUCTION. AFTER COMPLETION OF SURCHARGE WAITING PERIOD, REMOVE SURCHARGE AND EXISTING NATURAL GROUND OR SUITABLE GRADING MATERIAL TO THE LIMITS SHOWN IN "ROUGH GRADING SECTION" ABOVE, PRIOR TO ABUTMENT CONSTRUCTION. SEE BRIDGE PLANS AND SPECIAL PROVISIONS FOR ABUTMENT APPROACH SURCHARGE REQUIREMENT AND PAYMENTS.
4. SEE BRIDGE PLANS FOR SLOPE AND SLOPE PROTECTION.
5. SEE GRADING PLANS FOR TYPE OF MATERIAL.
6. GRADING TO BE SQUARED OFF ON SKEWED BRIDGES.
7. TOP OF 1:1.5 SLOPE (FORMS A LINE PARALLEL TO END OF BRIDGE).
8. SUBSURFACE PIPE DRAIN. FURNISH AND INSTALL AT TOP OF BRIDGE FOOTING IF BRIDGE DETAIL B910 IS INCLUDED ON BRIDGE PLAN.
9. IF THE APPROACH PANEL IS TIED TO THE ABUTMENT WITH REINFORCEMENT BARS, PLACE 12 MIL POLYETHYLENE SHEETING (OR TWO LAYERS OF OF 6 MIL) UNDER THE LIMITS OF THE APPROACH PANEL TO ALLOW THE PANEL TO MOVE LONGITUDINALLY ON THE GRADE. SHEETING IS INCIDENTAL.
10. SUITABLE GRADING MATERIAL SHALL HAVE SUITABLE MOISTURE CONTENT DURING PLACEMENT AND SHALL BE COMPACTED PER SPEC. 2105. SELECT GRANULAR MATERIAL MODIFIED 10% MAY BE USED IN LIEU OF SUITABLE GRADING MATERIAL.

S.P. 179-020-031 S.P. 019-605-028

STANDARD SHEET NO. 5-297.233 (1 OF 2)	TITLE: BRIDGE ABUTMENT APPROACH TREATMENT FOR ABUTMENT ON FOOTING
STANDARD APPROVED: AUGUST 1, 2011	

STATE PROJ. NO. 1901-148 (TH 13) SHEET NO. 113 OF 442 SHEETS

PLOTTED/REVISED: 13-JUN-2012 09:46
DISTRICT #: METRO
USER NAME: s233_l_spn
PATH & FILENAME: Projects/DM_ROS/013/1901/148/Design/PlanSheets/Standard Plans/s233_l_spn.dgn
FILE NAME: s233_l_spn

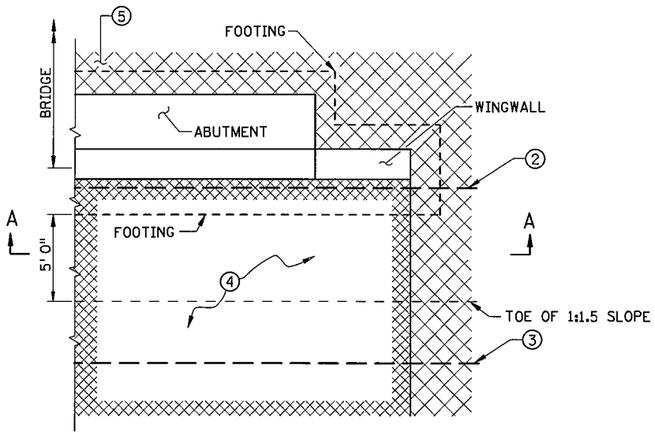

PARTIAL PLAN VIEW AT ABUTMENT
(WINGWALL AT 180°) (FINISHED GRADING)

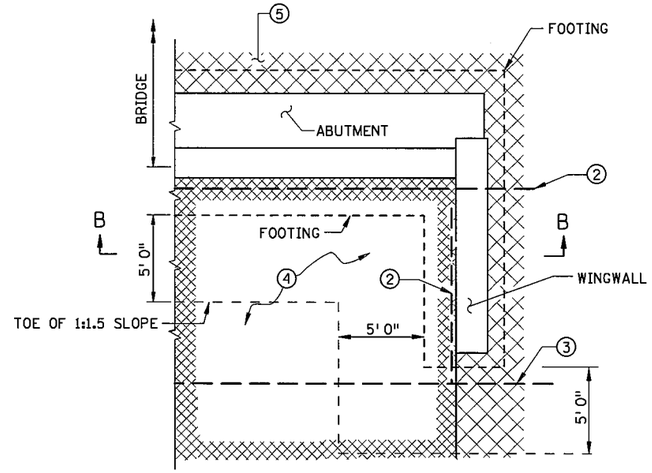

PARTIAL PLAN VIEW AT ABUTMENT
(WINGWALL AT 90°) (FINISHED GRADING)

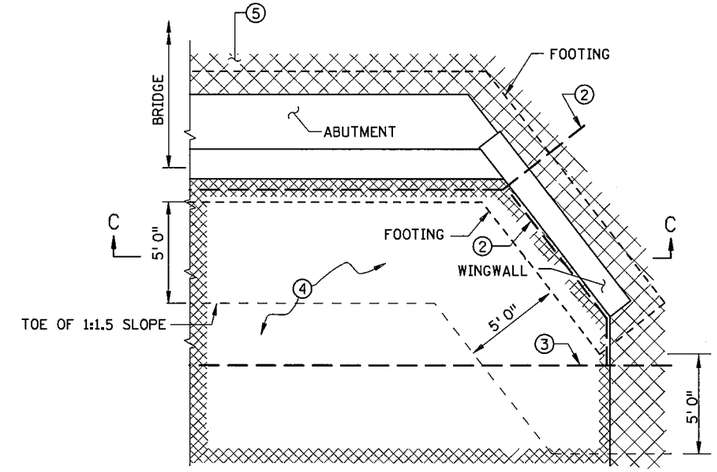

PARTIAL PLAN VIEW AT ABUTMENT
(WINGWALL AT ANY OTHER ANGLE) (FINISHED GRADING)

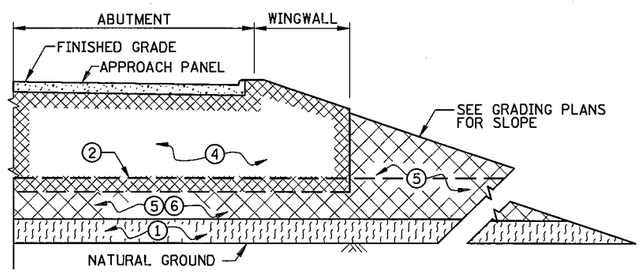

FINISHED GRADING SECTION A-A
(FILL SECTION)

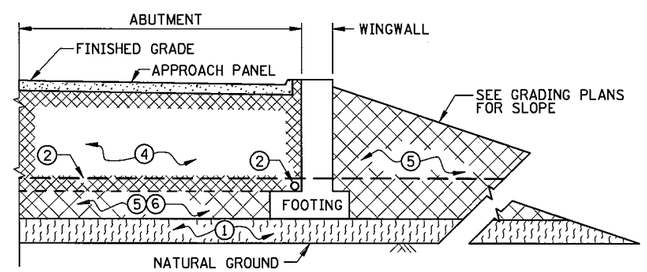

FINISHED GRADING SECTION B-B
(FILL SECTION)

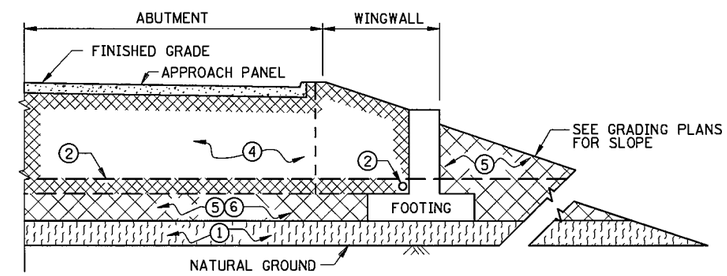

FINISHED GRADING SECTION C-C
(FILL SECTION)

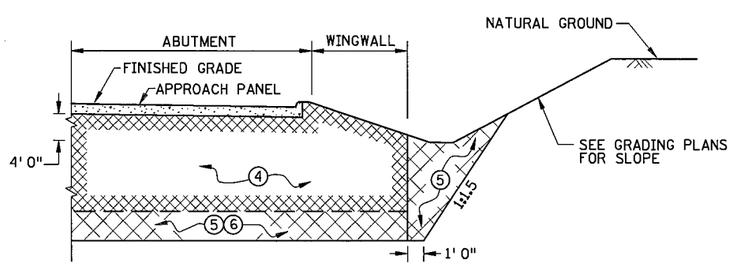

FINISHED GRADING SECTION A-A
(CUT SECTION)
(BRIDGE DETAIL B910 DRAIN NOT SHOWN)

NOTES:

1. NATURAL GROUND OR SUITABLE GRADING MATERIAL.
2. SUBSURFACE PIPE DRAIN, FURNISH AND INSTALL AT TOP OF BRIDGE FOOTING IF BRIDGE DETAIL B910 IS INCLUDED ON BRIDGE PLAN.
3. SUBSURFACE PIPE DRAIN. SEE GRADING PLAN FOR DETAILS. FURNISH AND INSTALL IF SHOWN IN GRADING PLAN.
4. SELECT GRANULAR MATERIAL MODIFIED 10% SHALL COMPLY WITH SPEC. 3149.2B2, MODIFIED TO 10% OR LESS PASSING THE NUMBER 200 SIEVE. QUANTITY OF SELECT GRANULAR MATERIAL MODIFIED 10% IS BASED ON DIMENSIONS SHOWN, AND PAYMENT IS BASED ON THIS QUANTITY. SEE GRADING PLAN FOR QUANTITY. IF THE CONTRACTOR CHOOSES TO INCREASE DIMENSIONS IN ORDER TO FACILITATE CONSTRUCTION OPERATIONS, ANY QUANTITY INCREASES SHALL BE CONSIDERED INCIDENTAL.
5. SUITABLE GRADING MATERIAL.
6. MATERIAL SHALL HAVE SUITABLE MOISTURE CONTENT DURING PLACEMENT AND SHALL BE COMPACTED PER SPEC. 2105. SELECT GRANULAR MATERIAL MODIFIED 10% MAY BE USED IN LIEU OF SUITABLE GRADING MATERIAL.

S.P. 179-020-031 S.P. 019-605-028

STANDARD SHEET NO. 5-297.233 (2 OF 2)	TITLE: BRIDGE ABUTMENT APPROACH TREATMENT FOR ABUTMENT ON FOOTING
STANDARD APPROVED: AUGUST 1, 2011	

STATE PROJ. NO. 1901-148 (TH 13) SHEET NO. 114 OF 442 SHEETS

PLOTTED/REVISED: 13-JUN-2012 09:46
DISTRICT #: METRO
USER NAME: s233_2_spn
PATH & FILENAME: Projects/DM_ROS/013/1901/148/Design/PlanSheets/Standard Plans/s233_2_spn.dgn
FILE NAME: s233_2_spn

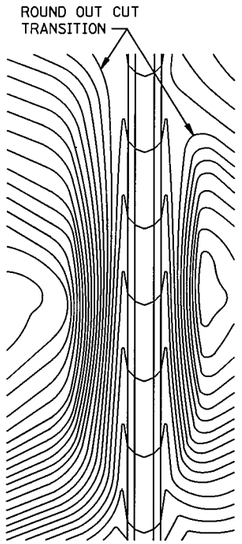

CONTOURING ROAD CUTS

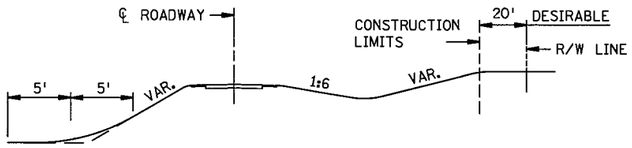

ROUNDING SHOULDERS AND BACKSLOPES

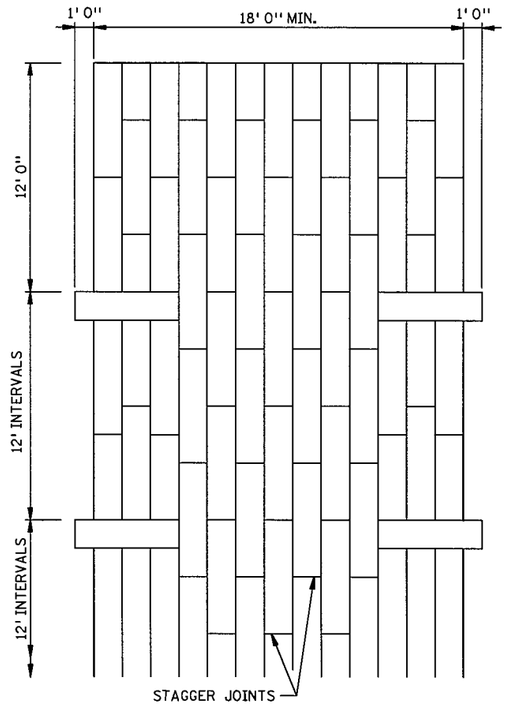

PLAN VIEW

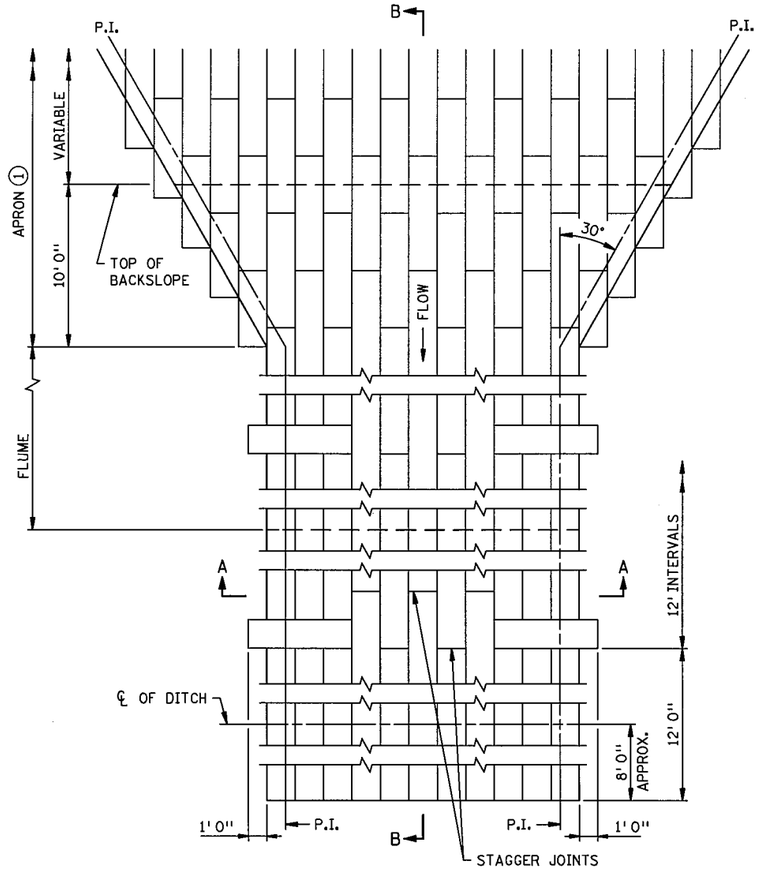

PLAN VIEW

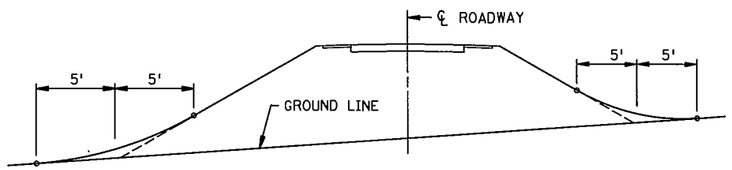

SHAPING FOR DRAINAGE ALONG THE TOE OF FILL SLOPES

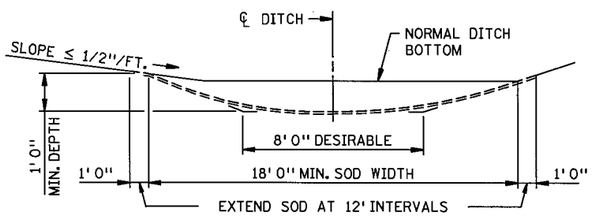

SODDED DITCH CROSS SECTION

WHERE FRONT OR BACK SLOPE IS FLAT (LESS THAN 1/2"/FT.), FIRST NOTCH DITCH AND THEN PROVIDE ROUNDING.

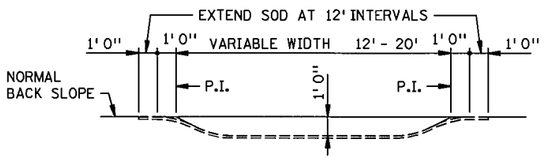

SECTION A-A

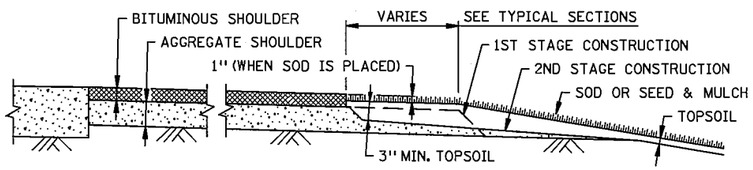

SHAPING AND TOPSOILING INSLOPES

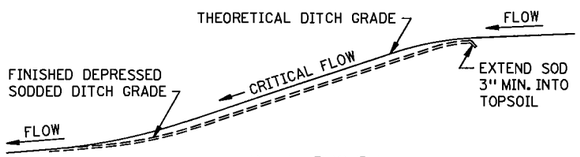

DITCH PROFILE

SODDED DITCH DETAILS

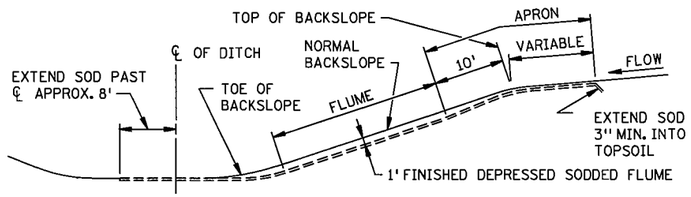

SECTION B-B

SODDED FLUME DETAILS

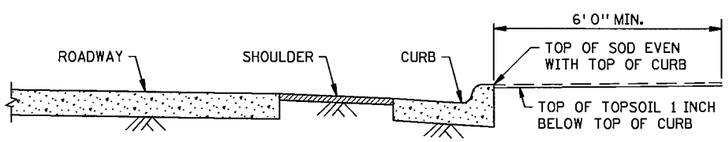

SHAPING ADJACENT TO CURBS WHEN SOD IS PLACED

NOTES:

SEE SPEC. 2575.3 FOR ADDITIONAL INFORMATION.

① CONSTRUCT TAPER AS DIRECTED BY THE ENGINEER.

S.P. 179-020-031 S.P. 019-605-028

STANDARD SHEET NO. 5-297.404	TITLE: PERMANENT EROSION CONTROL ALONG ROADWAYS, DITCHES AND FLUMES
STANDARD APPROVED: NOVEMBER 20, 2002	

STATE PROJ. NO. 1901-148 (TH 13) SHEET NO. 115 OF 442 SHEETS

PLOTTED/REVISED: 13-JUN-2012 09:48
DISTRICT #: METRO
USER NAME: s404_l_spn
PATH & FILENAME: Projects/DM_ROS/013/1901/148/Design/PlanSheets/Standard Plans/s404_l_spndgn
FILE NAME: s404_l_spn

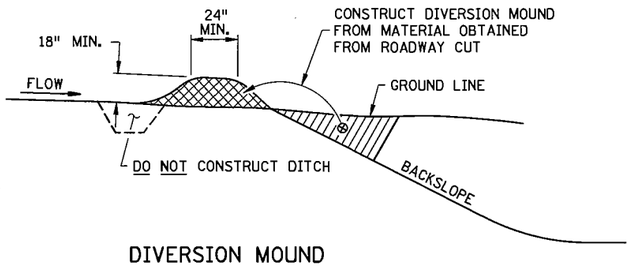

DIVERSION MOUND

DESIGN GUIDELINES:
STORM FREQUENCY: 10 YEAR - 24 HOUR
MAXIMUM DRAINAGE AREA: 5 ACRES
MAXIMUM DIVERSION: GRADE 5%

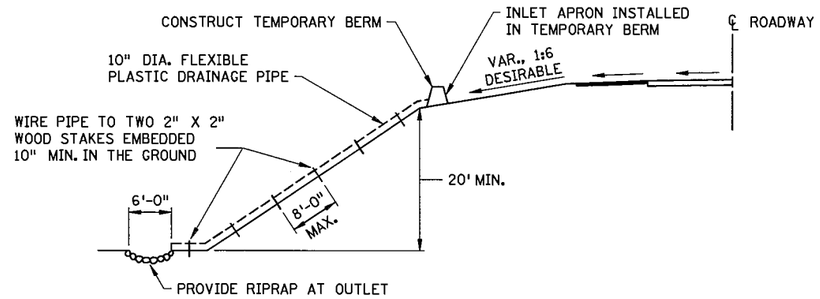

TEMPORARY DOWN DRAIN ON FILL SLOPE

DESIGN GUIDELINES:
STORM FREQUENCY: 2 YEAR - 24 HOUR
MAXIMUM DRAINAGE AREA: 3 ACRES

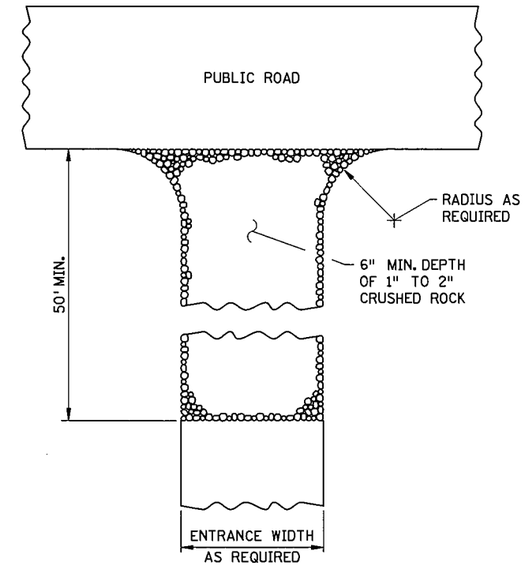

ROCK CONSTRUCTION ENTRANCE ①

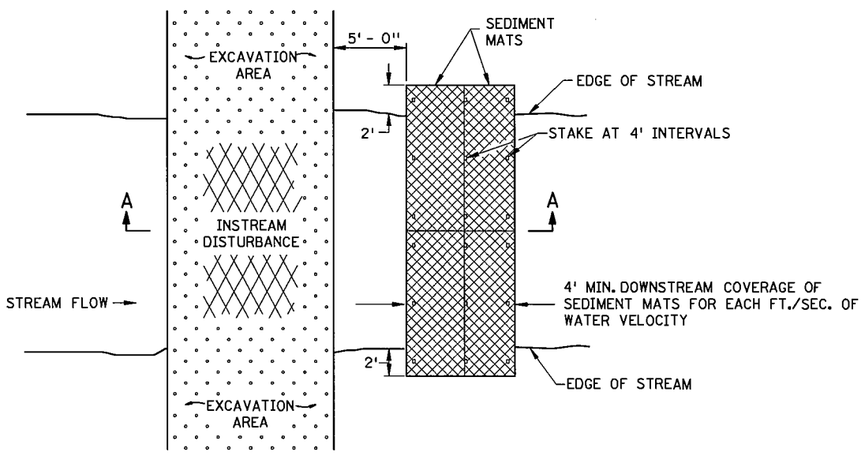

PLAN VIEW

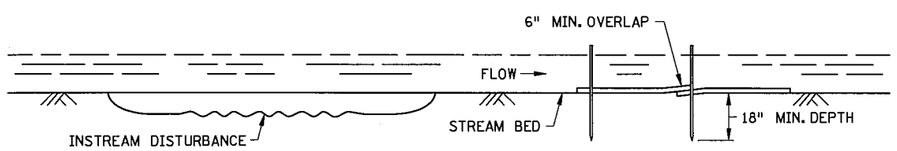

SECTION A-A

SEDIMENT MAT ⑥

TYPICAL STREAM BED INSTALLATION

DESIGN GUIDELINES:
MAXIMUM FLOW VELOCITY: 5 FT./SEC.
MAXIMUM FLOW DEPTH: 2 FT.

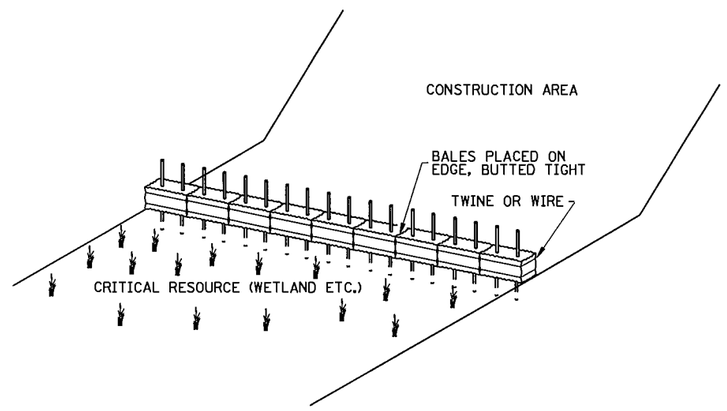

BALE BARRIERS

TO BE USED FOR CRITICAL PERIMETER CONTROL AREAS

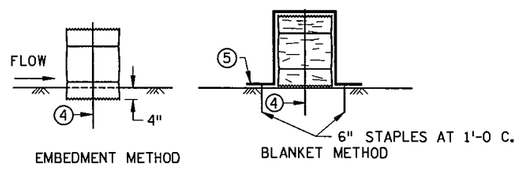

BALE BARRIER DETAIL

APPROX. BALE SIZE: 14" X 18" X 36" LONG

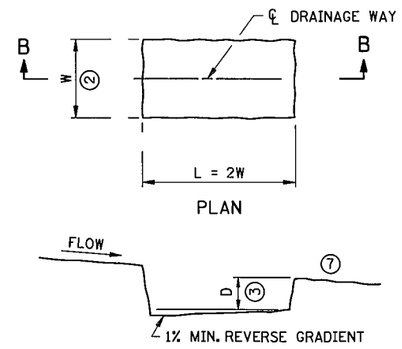

SECTION B-B

SEDIMENT TRAP DETAIL

NOTES:
SEE SPECS. 2573, 3892, & 3894.

① ROCKS AT ENTRANCE CLEAN WORKSITE MUD OFF OF TRUCK TIRES BEFORE TRUCKS ENTER MAIN ROAD. KEEPING MUD OFF THE ROAD WILL PREVENT AUTO DAMAGE AND KEEP CONSTRUCTION SEDIMENT OUT OF DRAINAGE SYSTEMS AND WETLANDS. GEOTEXTILE MAY BE PLACED UNDER THE ROCK TO KEEP ROCKS SEPARATE FROM SOIL.

② W = 10 FT. MIN., 20 FT. MAX.

③ D = 2 FT.

④ TWO 2 IN. X 2 IN. WOOD STAKES OR REINFORCING BARS IN EACH BALE EMBEDDED 10 INCHES MINIMUM IN THE GROUND.

⑤ PLACE A CATEGORY 3 EROSION CONTROL BLANKET, 6 FT. WIDE MINIMUM, OVER THE BALE INSTEAD OF TRENCHING.

⑥ THIS DETAIL MAY NOT BE ACCEPTABLE FOR WORK ON PUBLIC WATERS, SEE GENERAL PUBLIC WATERS PERMIT (GP) 2004-0001.

⑦ LOCATION OF DOWNSTREAM TEMPORARY SEDIMENT CONTROL DEVICE.

STANDARD SHEET NO.	TITLE:
5-297.405 (2 OF 4)	TEMPORARY SEDIMENT CONTROL
STANDARD APPROVED: MARCH 29, 2012	MISCELLANEOUS DETAILS

S.P. 179-020-031 S.P. 019-605-028

STATE PROJ. NO. 1901-148 (TH 13) SHEET NO. 116 OF 442 SHEETS

PLOTTED/REVISED: 14-JUN-2012 10:18
DISTRICT #: METRO
USER NAME: s405_2_spn
PATH & FILENAME: Projects/DM_ROS/013/1901/148/Design/PlanSheets/Standard Plans/s405_2_spn.dgn
FILE NAME: s405_2_spn

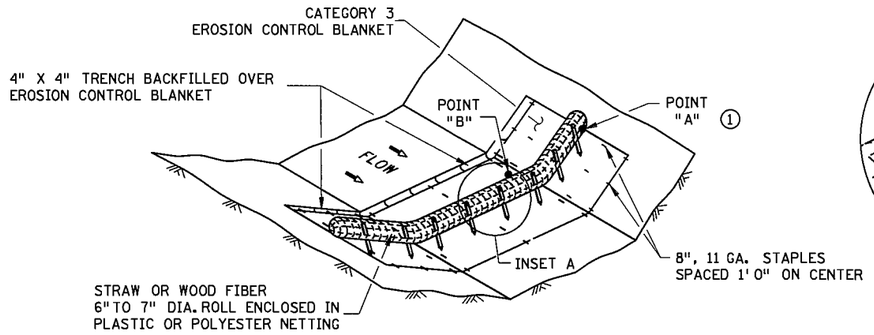

TYPE 3: BIOROLL BLANKET SYSTEM DITCH CHECK

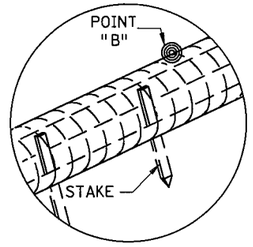

INSET A

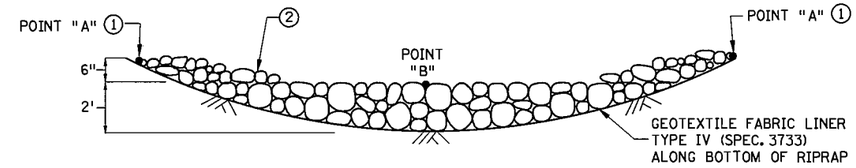

CROSS SECTION (ROCK WEEPER AND ROCK CHECK)

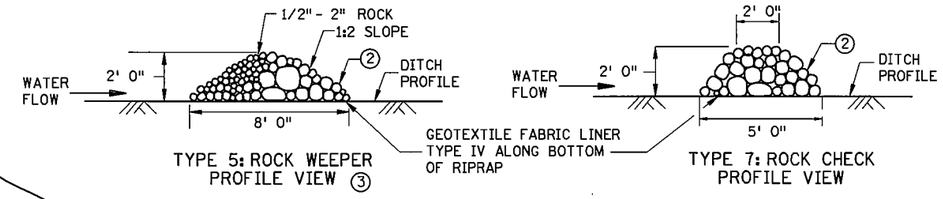

TYPE 5: ROCK WEEPER
PROFILE VIEW ③

TYPE 7: ROCK CHECK
PROFILE VIEW

TYPE 5: ROCK WEEPER AND
TYPE 7: ROCK CHECK DITCH CHECKS ④

USE ON ROUGH GRADED AREAS

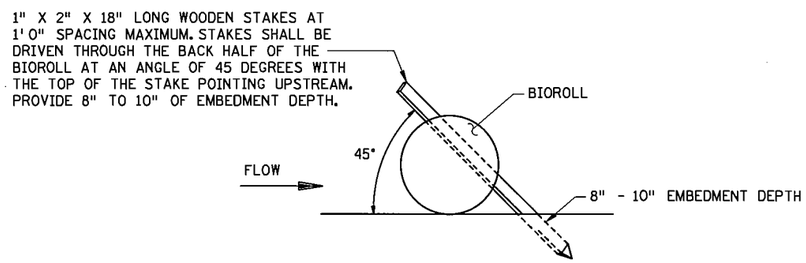

BIOROLL STAKING DETAIL

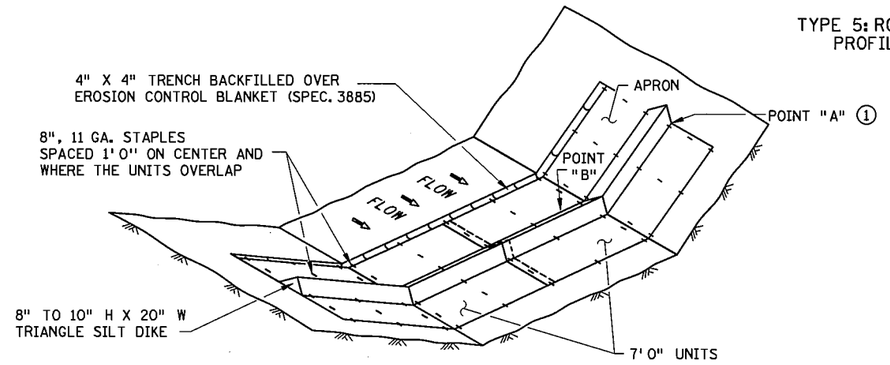

TYPE 6: GEOTEXTILE TRIANGULAR DIKE DITCH CHECK

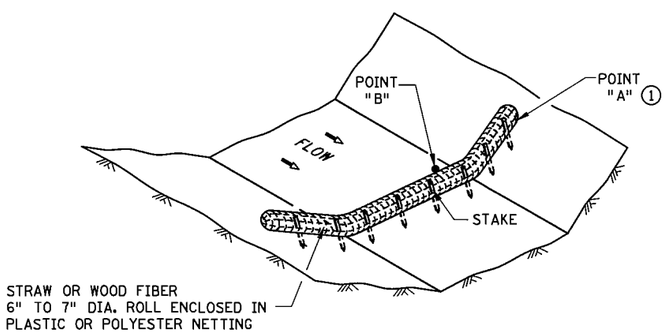

TYPE 2: BIOROLL DITCH CHECK

USE ON ROUGH GRADED AREAS

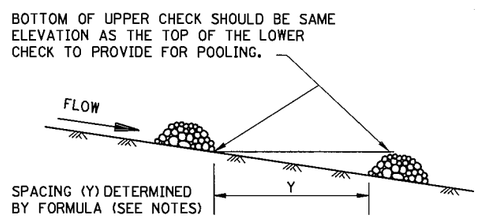

DITCH CHECK SPACING ④

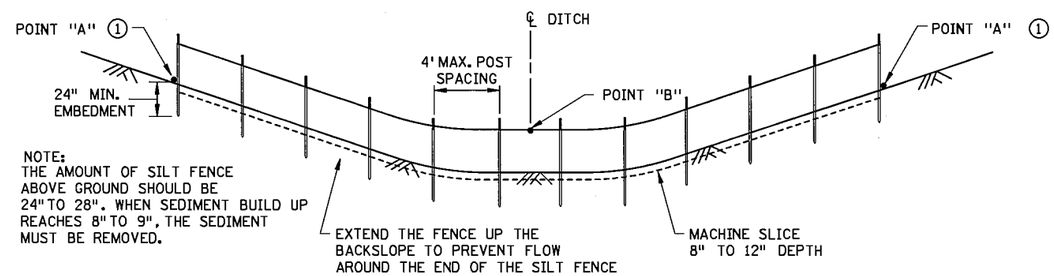

TYPE 1: SLICED IN SILT FENCE DITCH CHECK

NOTES:

SEE SPECS. 2573, 3601, 3733, 3885, 3886 & 3889.

APPROXIMATE SPACING BETWEEN EACH DITCH CHECK SHOULD BE DETERMINED FROM THE FOLLOWING SPACING FORMULA:

$$\text{APPROXIMATE SPACING OF DITCH CHECKS (FT.)} = Y = \frac{\text{DITCH CHECK HEIGHT (FT)}}{\text{\% CHANNEL SLOPE}} \times 100$$

① POINT "A" MUST BE A MINIMUM OF 6 INCHES HIGHER THAN POINT "B" TO ENSURE THAT WATER FLOWS OVER THE DIKE AND NOT AROUND THE ENDS.

② CLASS I - IV RIPRAP (SPEC. 3601) WITH GEOTEXTILE FABRIC LINER, TYPE IV (SPEC. 3733).

③ THE ROCK WEEPER FILTERS SEDIMENT OUT OF THE WATER BETTER THAN THE OTHER DITCH CHECKS. THE ROCK WEEPER COULD BE USED AS A PERMANENT WATER FILTERING FEATURE.

④ PERMANENT ROCK DITCH CHECKS PLACED WITHIN THE CLEAR ZONE WILL NEED TO BE 18" OR LESS IN HEIGHT. A 1:6 APPROACH AND DEPARTURE SLOPE SHALL BE PROVIDED.

GENERAL DESIGN GUIDELINES						
DITCH CHECK TYPE	SILT FENCE	BIOROLL	BIOROLL BLANKET	TRIANGULAR DIKE	ROCK WEEPER	ROCK CHECK
STORM FREQUENCY: MAX. FLOW VELOCITY: MAX. DITCH GRADE: MAX. DRAINAGE AREA:	2 YR. - 24 HR. < 1 FT./SECOND 0% - 0.5% 1 ACRE	2 YR. - 24 HR. 1.5 FT./SECOND 1.5% - 3% 2 ACRE	2 YR. - 24 HR. 4.5 FT./SECOND 1.5% - 3% 2 ACRE	2 YR. - 24 HR. 1.5 FT./SECOND 1.5% - 2.0% 4 ACRE	5 YR. - 24 HR. 12 FT./SECOND 3% - 5% 4+ ACRE	5 YR. - 24 HR. 12 FT./SECOND 3% - 5% 4+ ACRE

S.P. 179-020-031 S.P. 019-605-028

STANDARD SHEET NO.
5-297.405 (3 OF 4)

STANDARD APPROVED:
MARCH 29, 2012

TEMPORARY SEDIMENT CONTROL
DITCH CHECK/BARRIER

STATE PROJ. NO. 1901-148 (TH 13__) SHEET NO. 117 OF 442_ SHEETS

PLOTTED/REVISED: 14-JUN-2012 10:18
DISTRICT #: METRO
USER NAME: s405_3_spn
PATH & FILENAME: Projects/DM_ROS/013/1901/148/Design/PlanSheets/Standard Plans/s405_3_spn.dgn
FILE NAME: s405_3_spn

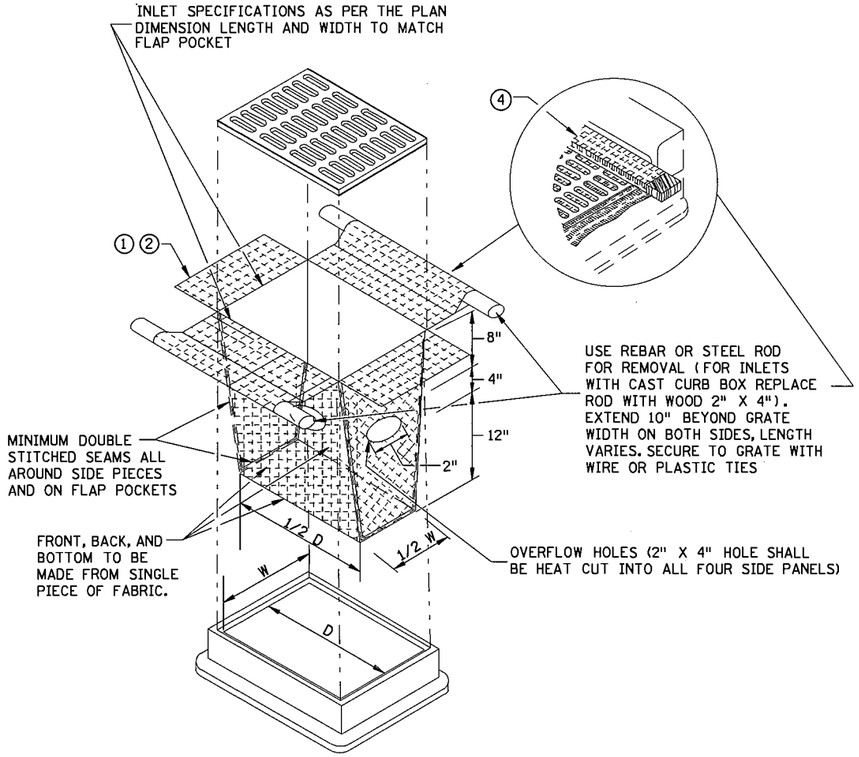

FILTER BAG INSERT 3

(CAN BE INSTALLED IN ANY INLET TYPE WITH OR WITHOUT A CURB BOX)

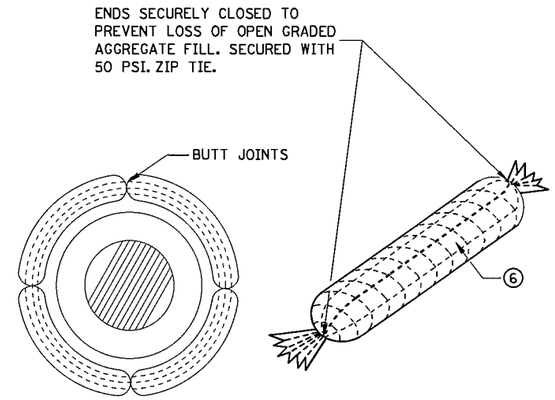

ROCK LOG/COMPOST LOG

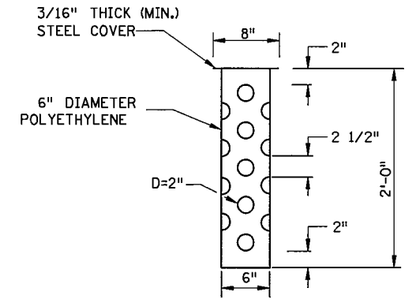

TUBE RISER

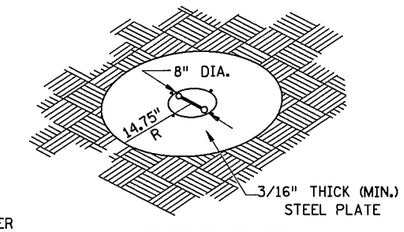

PERSPECTIVE VIEW

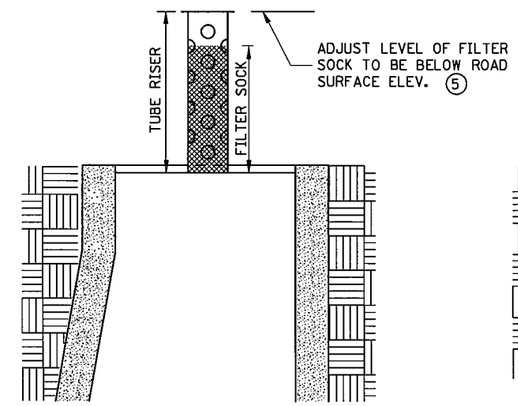

SECTION
(UP POSITION)

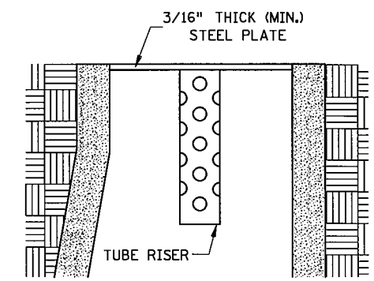

SECTION
(DOWN POSITION)

POP-UP HEAD

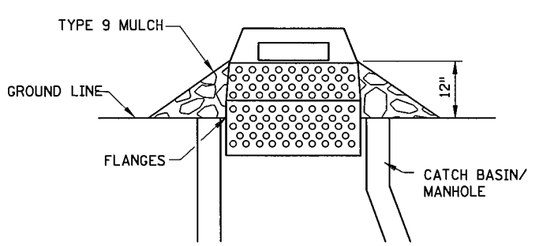

SEDIMENT CONTROL INLET HAT

NOTE:
THE SEDIMENT CONTROL BARRIER SHALL BE A METAL OR PLASTIC/POLYETHYLENE RISER SIZED TO FIT INSIDE THE CATCH BASIN/MANHOLE; HAVE PERFORATIONS TO ALLOW FOR WATER INFILTRATION; HAVE AN OVERFLOW OPENING, FLANGES AND A LID/COVER.

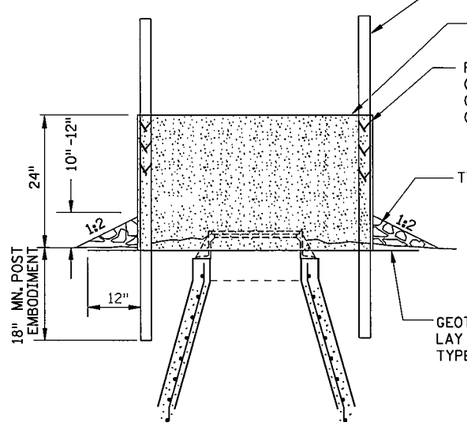

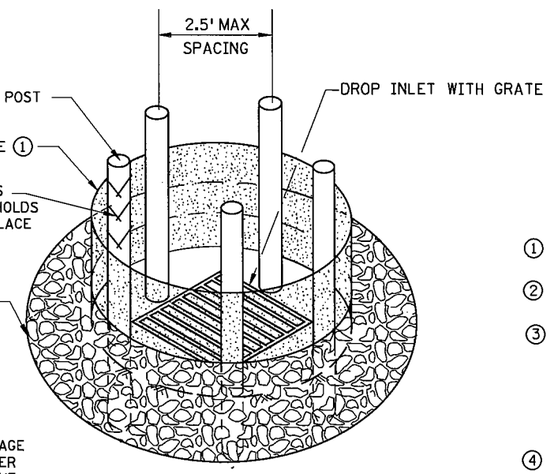

SILT FENCE RING AND ROCK FILTER BERM

USE WHERE INLET DRAINS IN AN AREA WITH SLOPES AT 1:3 or LESS

NOTES:

SEE SPECS. 2573, 3137, 3886 & 3891.

MANUFACTURED ALTERNATIVES LISTED ON Mn/DOT'S APPROVED PRODUCTS LIST MAY BE SUBSTITUTED.

1. ALL GEOTEXTILE USED FOR INLET PROTECTION SHALL BE MONOFILAMENT IN BOTH DIRECTIONS, MEETING SPEC. 3886.
2. FINISHED SIZE, INCLUDING POCKETS WHERE REQUIRED SHALL EXTEND A MINIMUM OF 10 INCHES AROUND THE PERIMETER TO FACILITATE MAINTENANCE OR REMOVAL.
3. INSTALLATION NOTES:
   DO NOT INSTALL FILTER BAG INSERT IN INLETS SHALLOWER THAN 30 INCHES, MEASURED FROM THE BOTTOM OF THE INLET TO THE TOP OF THE GRATE. THE INSTALLED BAG SHALL HAVE A MINIMUM SIDE CLEARANCE OF 3 INCHES BETWEEN THE INLET WALLS AND THE BAG, MEASURED AT THE BOTTOM OF THE OVERFLOW HOLES. WHERE NECESSARY THE CONTRACTOR SHALL CLINCH THE BAG, USING PLASTIC ZIP TIES, TO ACHIEVE THE 3 INCH SIDE CLEARANCE.
4. FLAP POCKETS SHALL BE LARGE ENOUGH TO ACCEPT WOOD 2 INCH X 4 INCH OR USE A ROCK SOCK OR SAND BAGS IN PLACE OF THE FLAP POCKETS.
5. SOCK HEIGHT MUST NOT BE SO HIGH AS TO SLOW DOWN WATER FILTRATION TO CAUSE FLOODING OF THE ROADWAY.
6. GEOTEXTILE SOCK BETWEEN 4-10 FEET LONG AND 4-6 INCH DIAMETER. SEAM TO BE JOINED BY TWO ROWS OF STITCHING WITH A PLASTIC MESH BACKING OR PROVIDE A HEAT BONDED SEAM (OR APPROVED EQUIVALENT). FILL ROCK LOG WITH OPEN GRADED AGGREGATE CONSISTING OF SOUND DURABLE PARTICLES OF COARSE AGGREGATE CONFORMING TO SPEC. 3137 TABLE 3137-1; CA-3 GRADATION.

S.P. 179-020-031 S.P. 019-605-028

STANDARD SHEET NO. 5-297.405 (4 OF 4)	TITLE: TEMPORARY SEDIMENT CONTROL STORM DRAIN INLET PROTECTION
STANDARD APPROVED: MARCH 29, 2012	

STATE PROJ. NO. 1901-148 (TH 13) SHEET NO. 118 OF 442 SHEETS

PLOTTED/REVISED: 14-JUN-2012 10:19
DISTRICT #: METRO
USER NAME: s405_4_spn
PATH & FILENAME: Projects/DM_ROS/013/190i/148/Design/PlanSheets/Standard Plans/s405_4_spn.dgn
FILE NAME: s405_4_spn

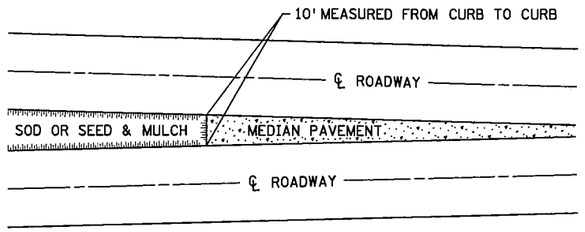

SODDING LIMITS AT GORE AREA

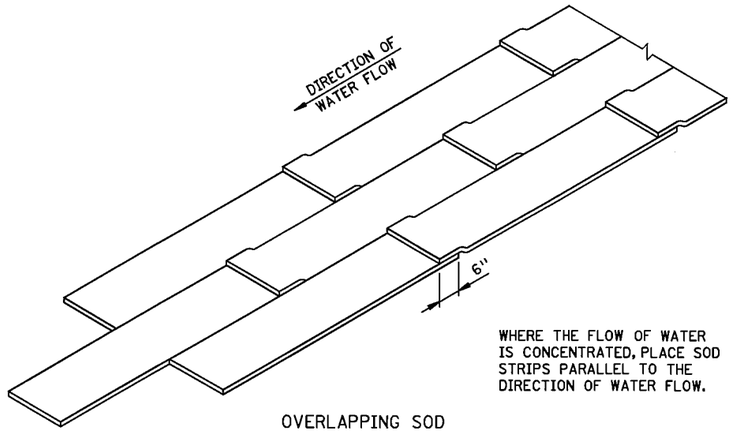

WHERE THE FLOW OF WATER IS CONCENTRATED, PLACE SOD STRIPS PARALLEL TO THE DIRECTION OF WATER FLOW.

OVERLAPPING SOD

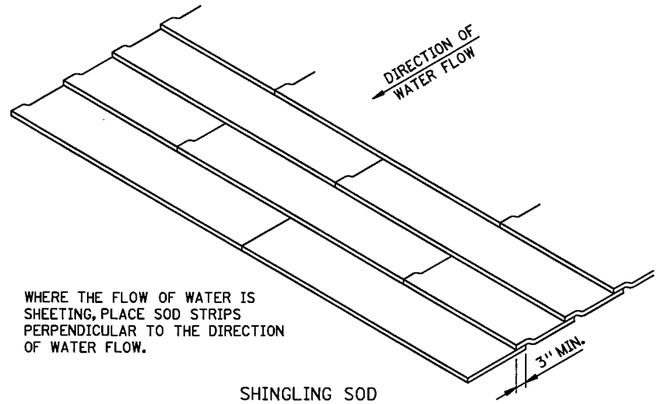

WHERE THE FLOW OF WATER IS SHEETING, PLACE SOD STRIPS PERPENDICULAR TO THE DIRECTION OF WATER FLOW.

SHINGLING SOD

SPECIAL SOD PLACEMENT TECHNIQUES

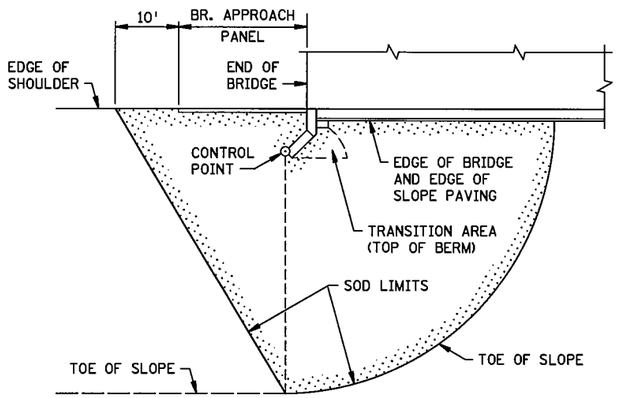

PLAN

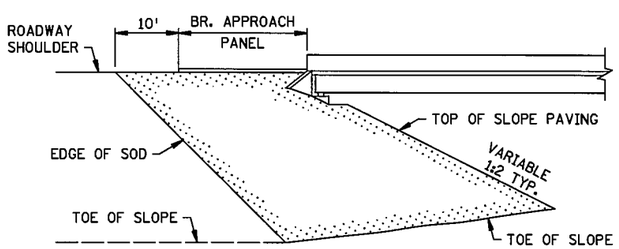

ELEVATION

SODDING LIMITS AT BRIDGE APPROACH FILLS

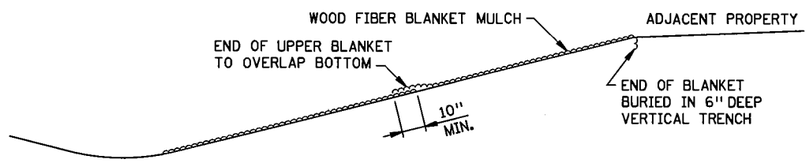

WOOD FIBER BLANKET INSTALLATION ON A CUT SLOPE

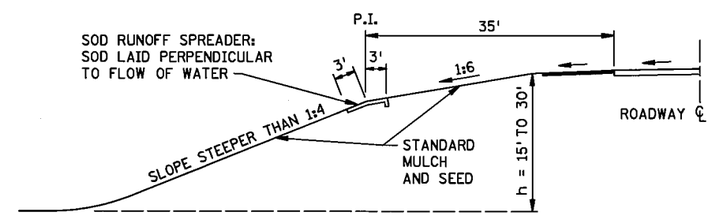

BROKEN-BACK SAFETY FILL SLOPE

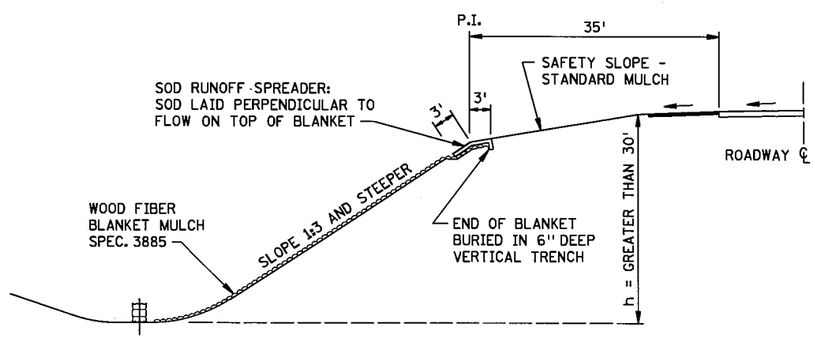

WOOD FIBER BLANKET INSTALLATION ON AN INSLOPE
(WHEN REQUIRED)

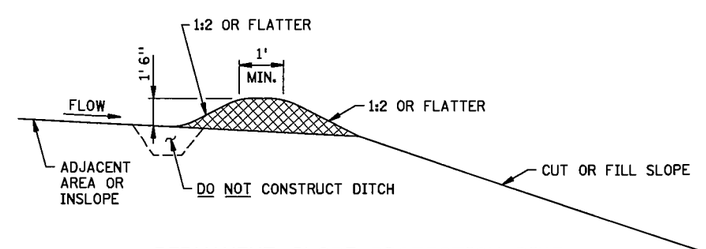

PERMANENT SLOPE PROTECTION DIKE

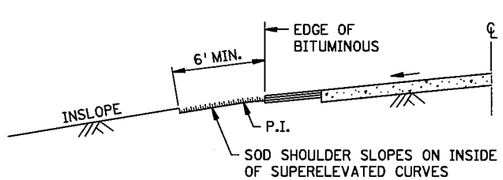

SODDING INSLOPES OF SUPERELEVATED CURVES

S.P. 179-020-031 S.P. 019-605-028

STANDARD SHEET NO. 5-297.406	TITLE: PERMANENT EROSION CONTROL ALONG ROADWAYS AND AT GORE AREAS & BRIDGE APPROACH FILLS
STANDARD APPROVED: JANUARY 31, 1985	

REVISION DATE 10-26-2000

STATE PROJ. NO. 1901-148 (TH 13) SHEET NO. 119 OF 442 SHEETS

PLOTTED/REVISED: 13-JUN-2012 10:03
DISTRICT #: METRO
USER NAME: s406_J_spn
PATH & FILENAME: Projects/DM_ROS/013/1901/148/Design/PlanSheets/Standard Plans/s406_J_spn.dgn
FILE NAME: s406_J_spn

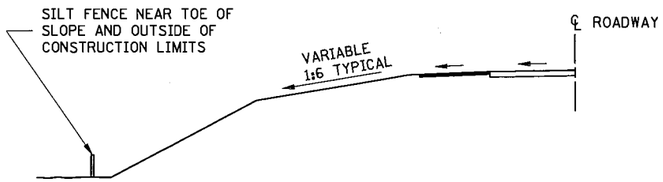

LOCATION OF SILT FENCE
AT TOE OF ROADWAY EMBANKMENT

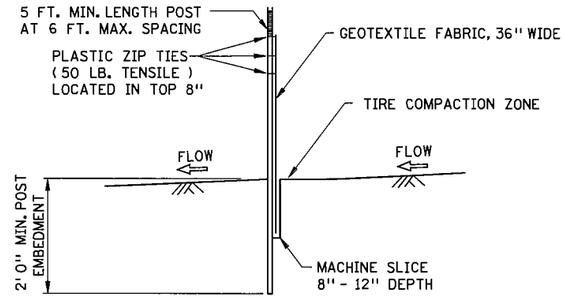

SILT FENCE, MACHINE SLICED
DESIGN GUIDELINES:
TO PROTECT AREAS FROM SHEET FLOW.
MAXIMUM CONTRIBUTING AREA: 1 ACRE.

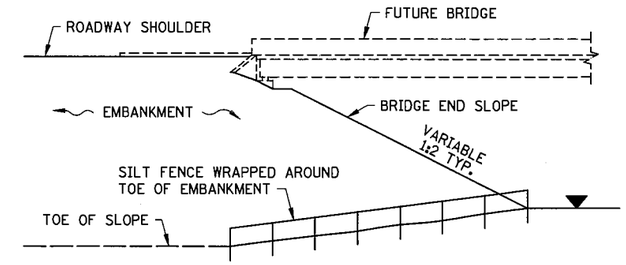

BRIDGE FILL

DESIGN GUIDELINES:
WATER COURSE FLOW VELOCITY: STAGNANT
CONTRIBUTING SLOPE AREA: 1/2 ACRE

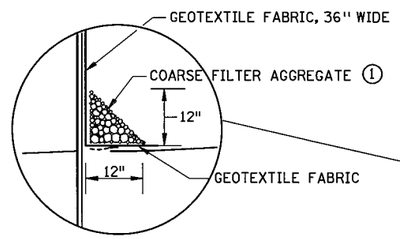

OPTIONAL METHOD
FOR SILT FENCE, HEAVY DUTY

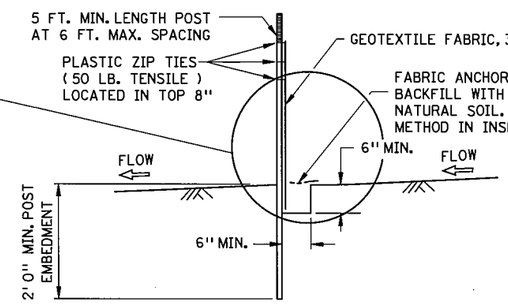

SILT FENCE, HEAVY DUTY
(HAND INSTALLED)
DESIGN GUIDELINES:
TO PROTECT AREAS FROM SHEET FLOW.
MAXIMUM CONTRIBUTING AREA: 1 ACRE.

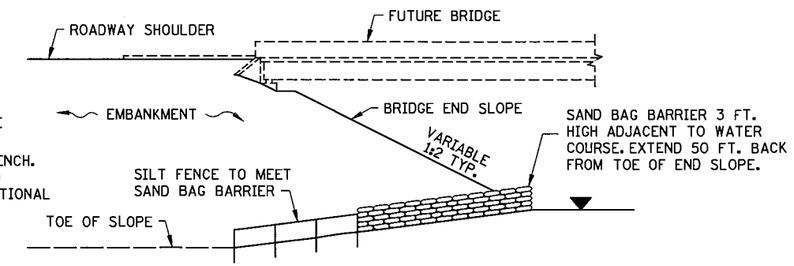

BRIDGE FILL

DESIGN GUIDELINES:
WATER COURSE FLOW VELOCITY: 1 TO 7 FT./SEC.
CONTRIBUTING SLOPE AREA: 1 ACRE

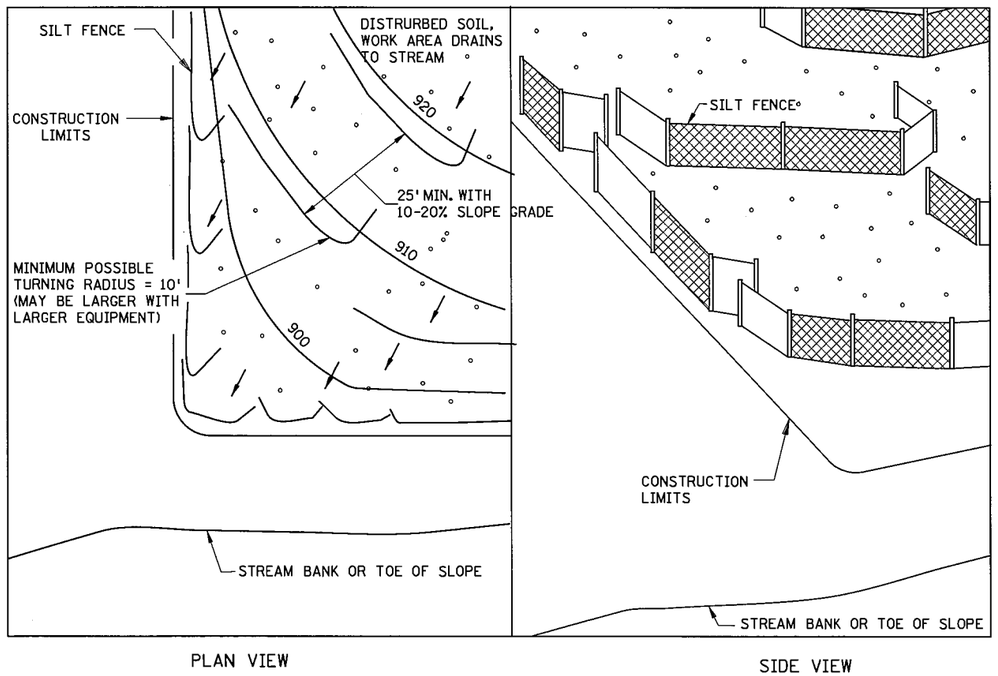

PLAN VIEW

SIDE VIEW

SILT FENCE, J-HOOK INSTALLATION

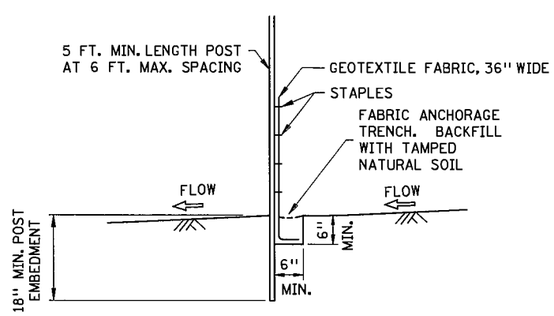

SILT FENCE, PREASSEMBLED
DESIGN GUIDELINES:
TO PROTECT AREAS FROM SHEET FLOW.
MAXIMUM CONTRIBUTING AREA: 1 ACRE.

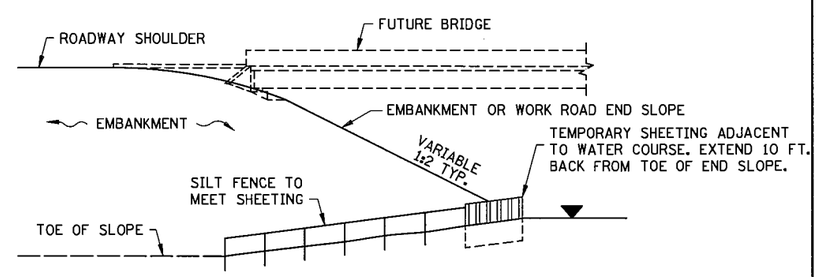

EMBANKMENT OR WORK ROAD FILL

DESIGN GUIDELINES:
WATER COURSE FLOW VELOCITY: 8 TO 15 FT./SEC.
CONTRIBUTING SLOPE AREA: 3 ACRES

SILT FENCE AT BRIDGE EMBANKMENT ADJACENT TO WATER

NOTES:
SEE SPECS. 2573, 3149 & 3886.
(1) COARSE FILTER AGGREGATE (SPEC. 3149) SHALL BE INCIDENTAL.

S.P. 179-020-031 S.P. 019-605-028

STANDARD SHEET NO. 5-297.408 (1 OF 2)	TITLE: TEMPORARY SEDIMENT CONTROL SILT FENCE
STANDARD APPROVED: SEPTEMBER 27, 2006	
STATE PROJ. NO. 1901-148 (TH 13)	SHEET NO. 120 OF 442 SHEETS

PLOTTED/REVISED: 13-JUN-2012 10:04
DISTRICT #: METRO
USER NAME: s408_l_spn
PATH & FILENAME: Projects/DM_ROS/013/1901/148/Design/PlanSheets/Standard Plans/s408_l_spn.dgn
FILE NAME: s408_l_spn

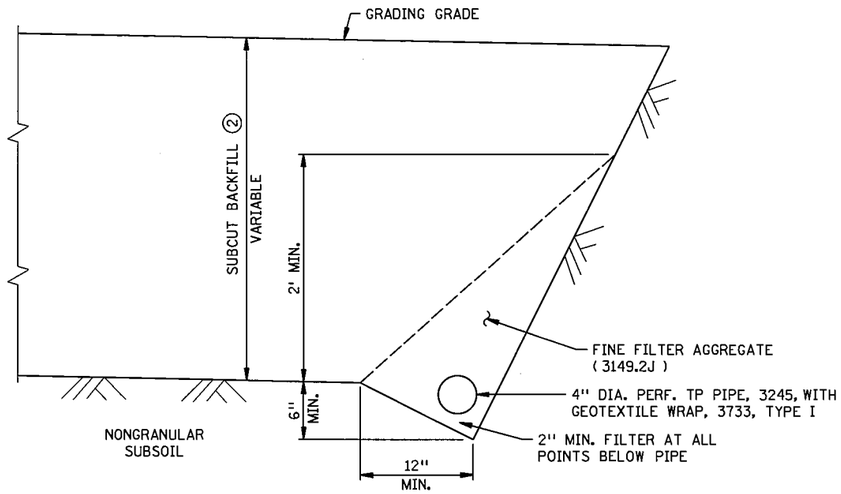

TYPICAL SECTION (OPTION NO. 1) ①

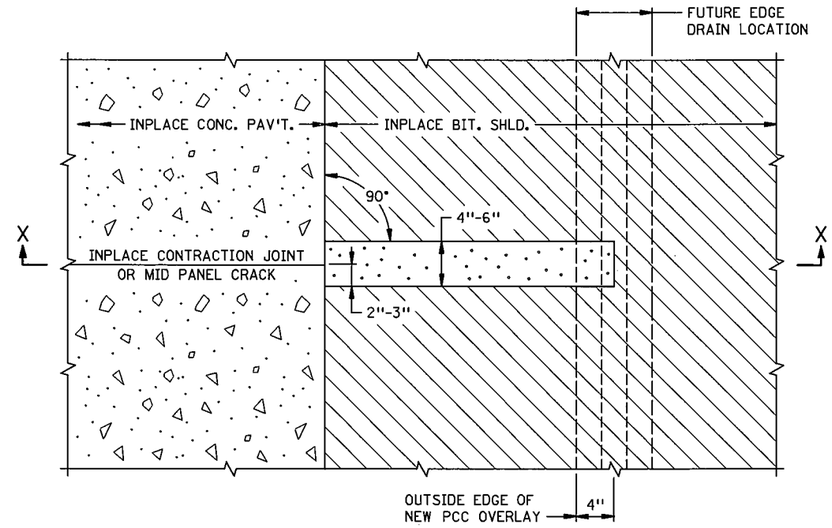

PLAN VIEW

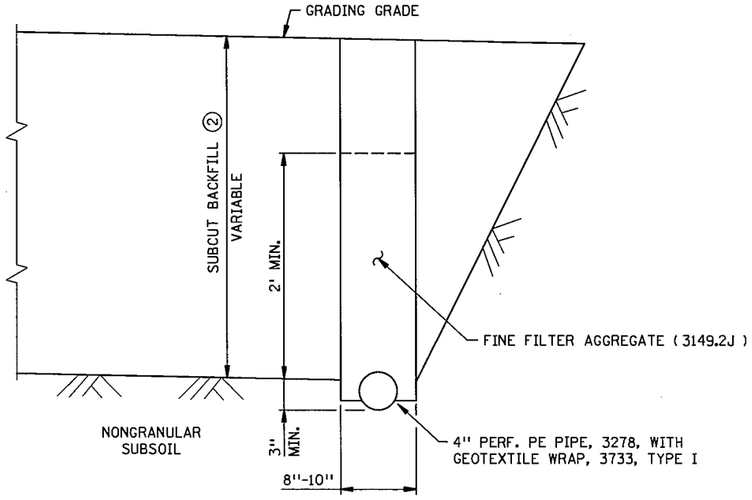

TYPICAL SECTION (OPTION NO. 2) ①

SUBSURFACE DRAIN, SUBCUT DRAIN TYPE

NOTES:

① MAY NEED TO BE MODIFIED FOR SPECIFIC PROJECTS. SEE SPECIAL PROVISIONS FOR MATERIAL AND CONSTRUCTION DETAILS. OPTION NO. 2 MAY ONLY BE USED WHEN PIPE IS TO BE PLACED BY MACHINE TRENCHER.

② GRANULAR, SELECT GRANULAR OR SELECT GRANULAR MODIFIED. (AS SHOWN IN DESIGN RECOMMENDATION LETTER).

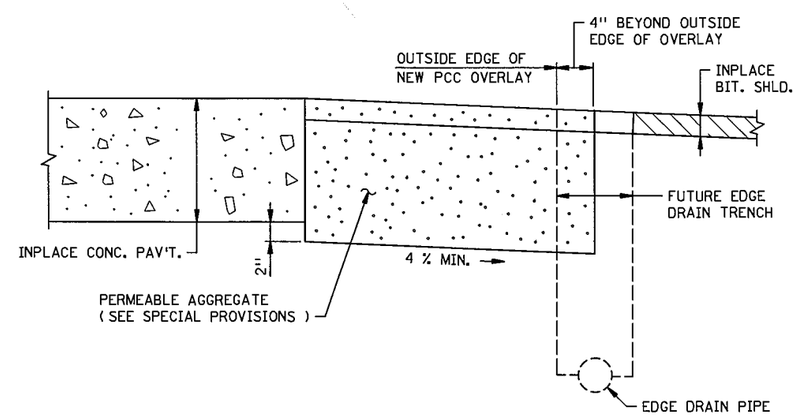

SECTION X-X

INTERCEPTOR DRAIN DETAIL ①

NOTE:

① SEE SPECIAL PROVISIONS FOR MATERIAL AND CONSTRUCTION DETAILS.

S.P. 179-020-031 S.P. 019-605-028

STANDARD SHEET NO. 5-297.430	TITLE: SUBSURFACE DRAINS
STANDARD APPROVED: FEBRUARY 25, 1997	

PLOTTED/REVISED: 13-JUN-2012 10:06
DISTRICT #: METRO
USER NAME: s430_1_spn
PATH & FILENAME: Projects/DM_ROS/013/1901/148/Design/PlanSheets/Standard Plans/s430_1_spndgn
FILE NAME: s430_1_spn

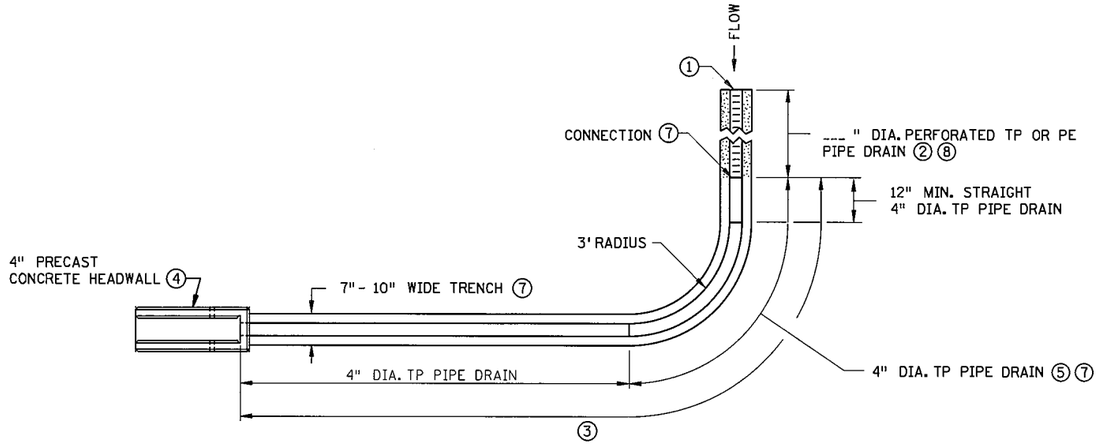

TYPICAL PLAN VIEW (SINGLE DISCHARGE) 7
(SEE TABULATION FOR LOCATIONS)

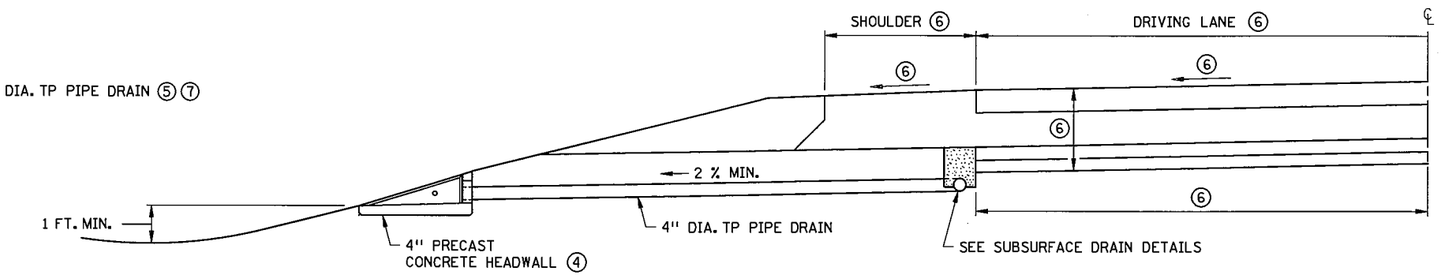

SECTION VIEW

TYPICAL EDGE DRAIN AND DISCHARGE CROSS SECTION 7
(SEE TABULATION FOR LOCATIONS)

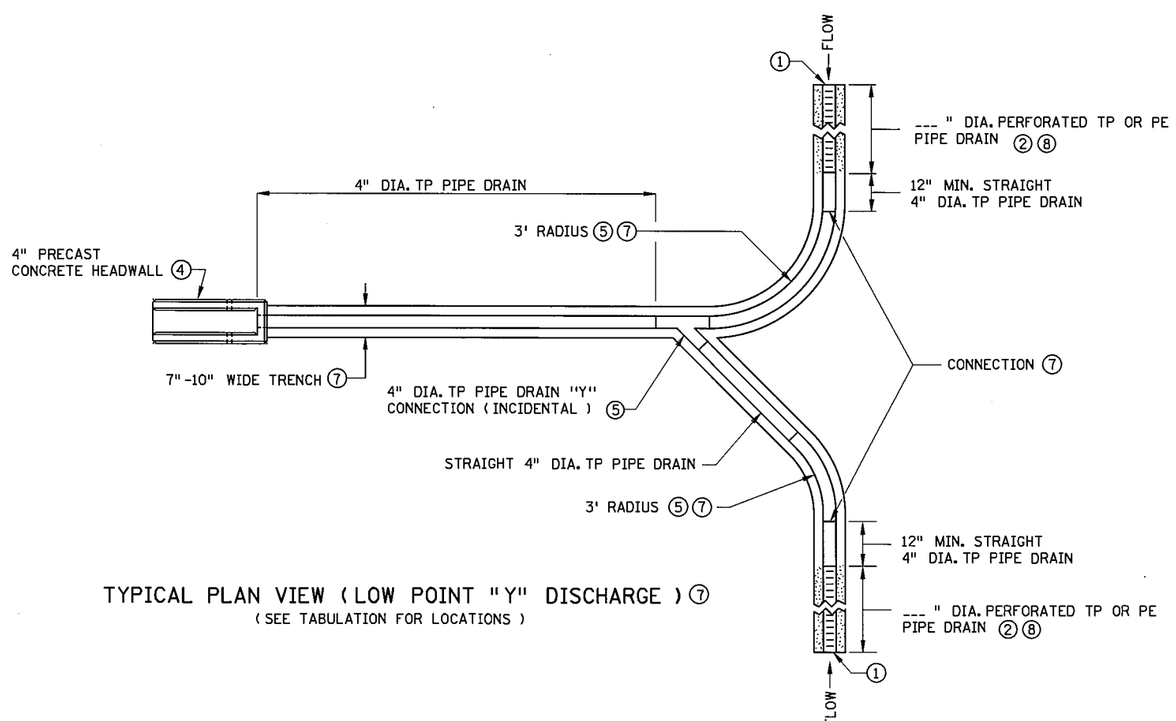

TYPICAL PLAN VIEW (LOW POINT "Y" DISCHARGE) 7
(SEE TABULATION FOR LOCATIONS)

NOTES:

1. THE UPSTREAM ENDS OF THE PERFORATED PIPE SHALL BE CAPPED AS APPROVED BY THE PROJECT ENGINEER, THE CAPS ARE INCIDENTAL. PLACE PERFORATED PIPE WITH THE PERFORATIONS DOWN.
2. MAXIMUM LENGTH 500 FT., EXCEPT 300 FT. MAXIMUM FOR GRADES LESS THAN 0.2% . LENGTH INCLUDED AND PAID FOR AS SPEC. 2502, __ INCH PERFORATED TP OR PE PIPE DRAIN.
3. LENGTH INCLUDED AND PAID FOR AS SPEC. 2502, 4 INCH DIA. TP PIPE DRAIN.
4. PRECAST CONCRETE HEADWALL STANDARD PLATE 3131 PAID FOR AS SPEC. 2502, 4 INCH PRECAST CONCRETE HEADWALL.
5. DETAILS OF CONNECTION AND COUPLING TO PIPE SHALL BE APPROVED BY THE ENGINEER. PAYMENT FOR "Y" AND EXTRA CONNECTION, 11 INCH TP PIPE AND COUPLING TO BE INCIDENTAL.
6. SEE ROADWAY TYPICAL SECTIONS FOR ADDITIONAL INFORMATION.
7. SEE SPECIAL PROVISIONS FOR MATERIAL AND CONSTRUCTION DETAILS.
8. 3 INCH OR 4 INCH DIAMETER.

S.P. 179-020-031 S.P. 019-605-028

STANDARD SHEET NO. 5-297.433	TITLE: SUBSURFACE DRAINS OUTLET PIPES FOR EDGE AND SUBCUT DRAINS
STANDARD APPROVED: SEPTEMBER 12, 2005	

REVISION DATE 4-19-2012

STATE PROJ. NO. 1901-148 (TH 13) SHEET NO. 122 OF 442 SHEETS

PLOTTED/REVISED: 13-JUN-2012 10:07
DISTRICT #: METRO
USER NAME: s433_J_spn
PATH & FILENAME: Projects/DM_ROS/013/1901/148/Design/PlanSheets/Standard Plans/s433_J_spn.dgn
FILE NAME: s433_J_spn

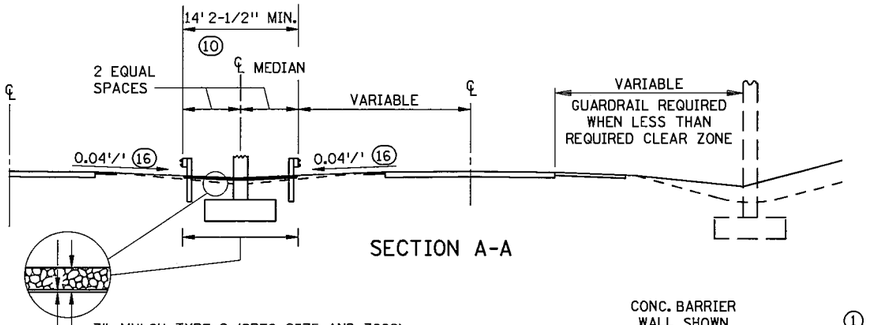

SECTION A-A

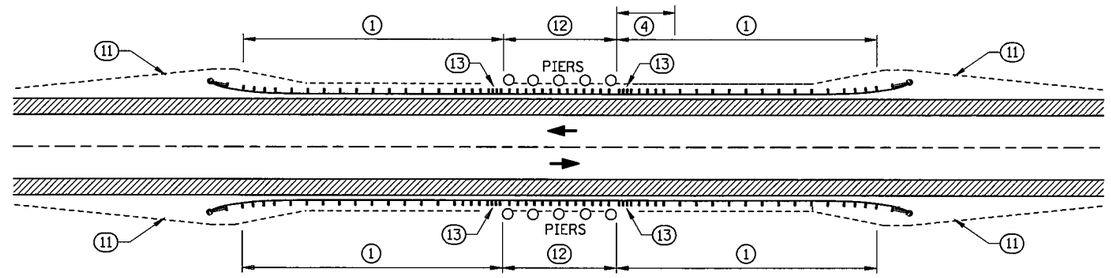

TWO-WAY UNDERPASS

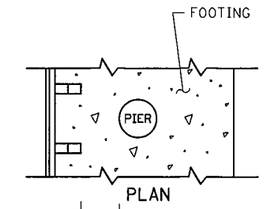

PLAN

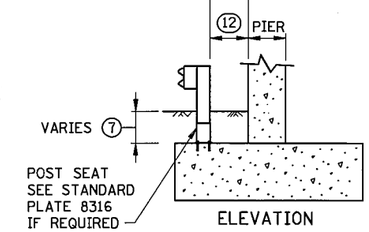

ELEVATION

POST REQUIREMENTS AT PIERS

ESTIMATED DESIGN DEFLECTION TABLE FOR DESIGN B W-BEAM GUARDRAIL

6' 3" POST SPACING	3' 0"
6' 3" POST SPACING WITH DOUBLE NESTED RAIL	2' 8"
MODIFIED 3' 1-1/2" POST SPACING	2' 3"
MODIFIED POST SPACING WITH DOUBLE NESTED RAIL	2' 0"

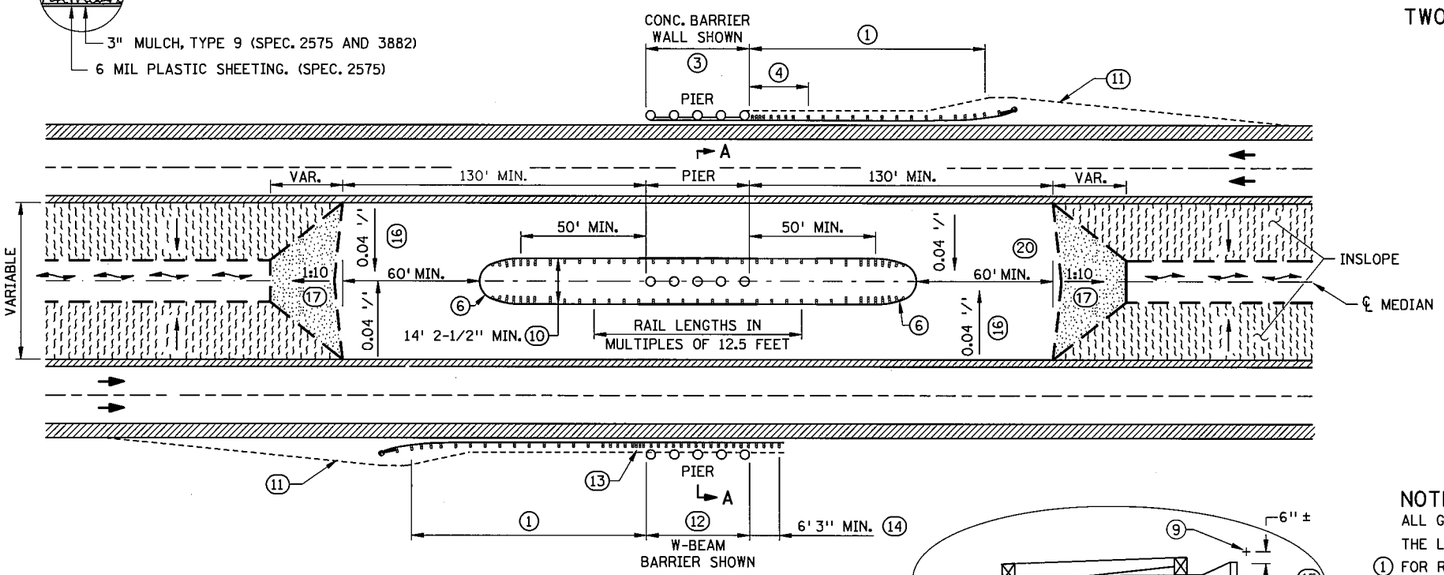

UNDERPASS-DEPRESSED MEDIAN (19)

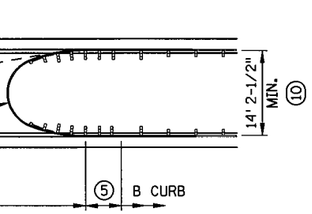

MODIFIED CURB AT RAISED MEDIAN

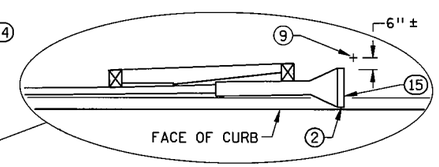

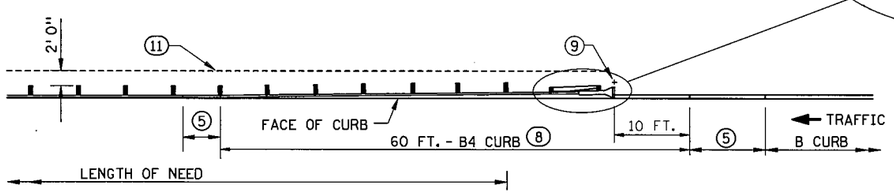

PLAN VIEW MODIFIED CURB (18)

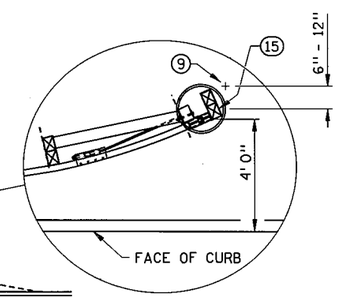

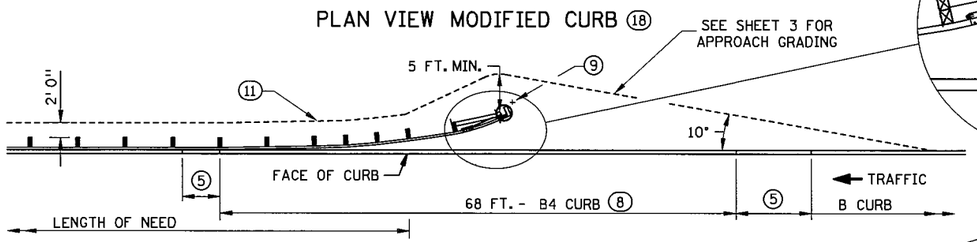

PLAN VIEW MODIFIED CURB AND SLOPE (18)
(NON-PROPRIETARY TERMINAL SHOWN AS EXAMPLE)

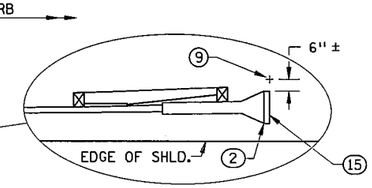

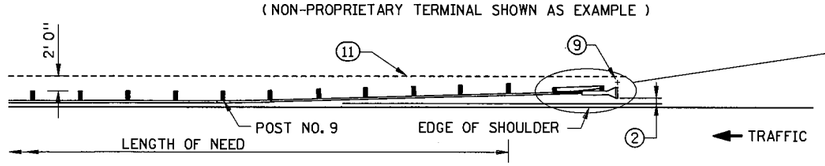

PLAN VIEW NO CURB (18)

NOTES:

ALL GUARDRAIL POSTS SHALL BE 6 FT. 3 IN. CENTER TO CENTER (DESIGN B), EXCEPT WHERE NOTED.

THE LATEST APPROVED VERSION OF STANDARD PLATES SHOWN OR AS INDICATED IN THE PLANS SHALL APPLY.

(1) FOR REQUIRED LENGTH OF INSTALLATION SEE ROAD DESIGN MANUAL CHAPTER 10.

(2) THE LAST 50 FT. OF TANGENT TERMINALS MAY BE FLARED AT 1:50 TAPER.

(3) CONC. BARRIER WALL BETWEEN PIER COLUMNS MAY BE USED. IF USED, SEE BARRIER WALL DETAILS.

(4) AN APPROVED TRANSITION MUST BE USED.

(5) 10 FT. CURB TRANSITION, USE IF ADJACENT CURB IS GREATER THAN 4 INCHES.

(6) THRIE BEAM BULLNOSE. SEE SHEET NO. 128 FOR DETAILS.

(7) IF EMBEDMENT IS GREATER THAN 3 FT. 0 IN., OR IF EMBEDMENT IS 2 FT. 6 IN. TO 3 FT. 0 IN. AND ADJACENT POSTS ARE EMBEDDED 3 FT. 0 IN. OR MORE, POST SEAT IS NOT REQUIRED.

(8) FOR CURB 6 IN. OR HIGHER, MILL TO 3 IN. HEIGHT.

(9) SNOWPLOW MARKER (X4-5) WITH A 2 LB./FT. DELINEATOR POST 8 FT. LONG (SPEC. 3401) DRIVEN INTO THE GROUND. EXTEND 3 FT. ABOVE TERMINAL. THE MARKER IS INCIDENTAL FOR WHICH NO DIRECT PAYMENT WILL BE MADE.

(10) MEASUREMENT IS FROM BACK OF RAIL TO BACK OF RAIL.

(11) 1:10 OR FLATTER SLOPE P.I.

(12) SEE ESTIMATED DESIGN DEFLECTION TABLE FOR DESIGN B W-BEAM GUARDRAIL.

(13) WHEN CLOSE POST SPACING OR DOUBLE NESTED RAIL IS USED, THIS POST SPACING SHOULD EXTEND A MINIMUM OF 12 FT. IN THE DIRECTION OF APPROACHING TRAFFIC.

(14) THE ANCHOR ASSEMBLY MUST BE LOCATED DOWNSTREAM OF THE HAZARD.

(15) MARK THE APPROACH END OF PLATE BEAM GUARDRAIL INSTALLATIONS WITH A STRIPED OBJECT MARKER SIZED TO FIT THE END TERMINAL, HAVING ALTERNATING BLACK AND REFLECTIVE YELLOW (WIDE ANGLE PRISMATIC RETROREFLECTIVE SHEETING) STRIPES SLOPED DOWNWARD AT A 45 DEGREE ANGLE TOWARD THE SIDE ON WHICH TRAFFIC PASSES. FOR FLAT END TREATMENTS THE OBJECT MARKER SHALL FIT INSIDE THE RECESSED AREA. FOR ROUNDED END TREATMENTS THE OBJECT MARKER SHALL WRAP AROUND THE CIRCULAR END AND BE MOUNTED SO THE TOP OF THE OBJECT MARKER LINES UP WITH THE TOP OF THE END TREATMENT.

(16) 0.04 FT./FT. CROSS SLOPE TYPICAL. 0.10 FT./FT. CROSS SLOPE MAXIMUM.

(17) 1:10 SLOPE OR FLATTER.

(18) USE ONLY FOR RETROFITS WITH SITE RESTRICTIONS. FOR RETROFITS WITHOUT SITE RESTRICTIONS AND NEW CONSTRUCTION, SEE SHEET 3.

(19) MEDIAN GRADING DETAIL SHOWN APPLIES TO THRIE-BEAM BULLNOSE ONLY.

(20) DRAINAGE DETAILS SHOWN ON GRADING PLAN.

S.P. 179-020-031 S.P. 019-605-028

STANDARD SHEET NO. 5-297.601 (1 OF 3)	TITLE: GUARDRAIL INSTALLATIONS AT MEDIANS AND END TREATMENTS
STANDARD APPROVED: MARCH 23, 2011	

STATE PROJ. NO. 1901-148 (TH 13) SHEET NO. 123 OF 442 SHEETS

PLOTTED/REVISED: 13-JUN-2012 10:09
DISTRICT #: METRO
USER NAME: s601J_spn
PATH & FILENAME: Projects/DM_ROS/013/1901/148/Design/PlanSheets/Standard Plans/s601J_spndgn
FILE NAME: s601J_spn

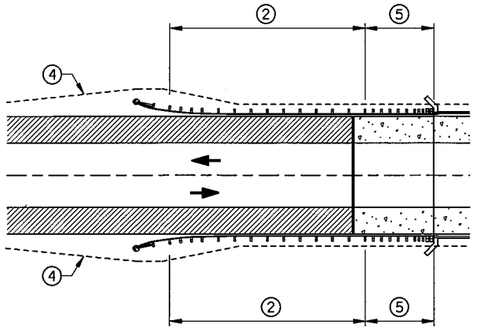

TWO - WAY BRIDGE
WITH FULL SHOULDERS

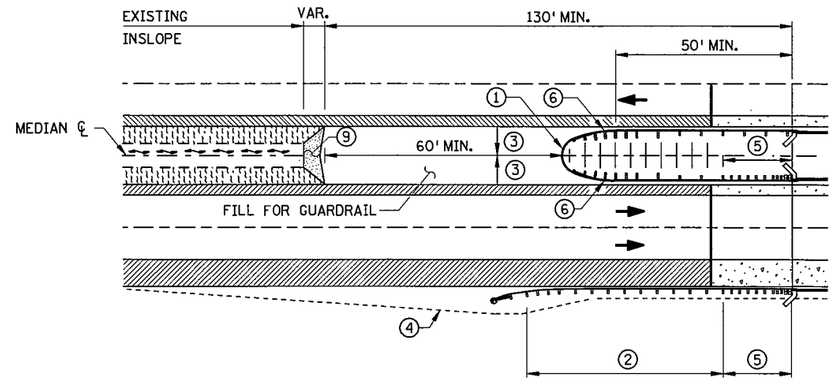

ONE - WAY BRIDGE
WITH FULL RIGHT SHOULDER
(FOR 14' 2-1/2" THRIE BEAM BULLNOSE)

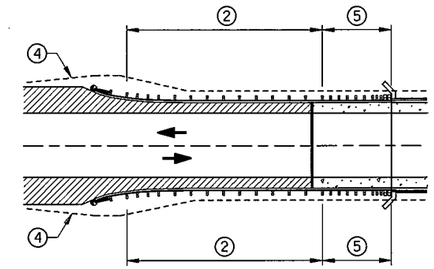

TWO - WAY BRIDGE
WITHOUT FULL SHOULDERS

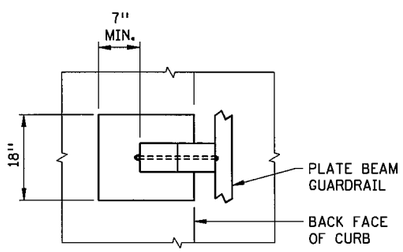

PLAN VIEW

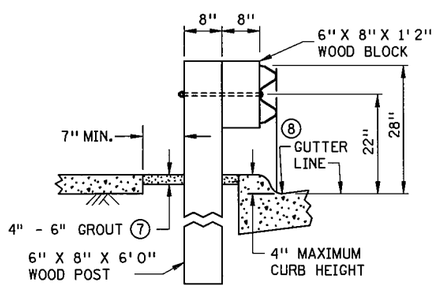

ELEVATION

TYPICAL W-BEAM GUARDRAIL SECTION
AT POST SET IN CONCRETE

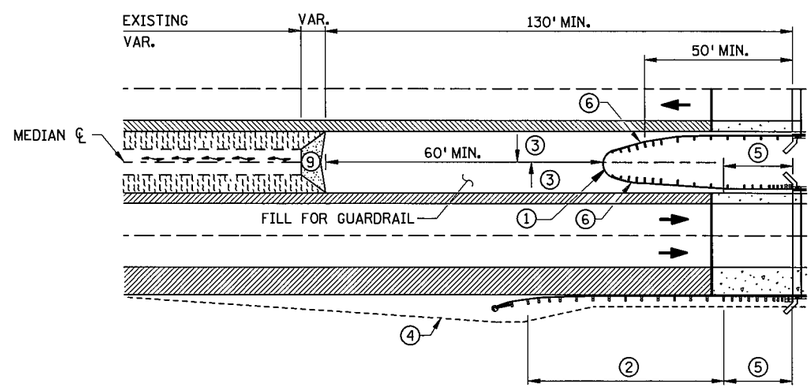

ONE - WAY BRIDGE
WITH FULL RIGHT SHOULDER
(FOR MEDIANS WIDER THAN 14' 2-1/2" THRIE BEAM BULLNOSE)

NOTES:

ALL GUARDRAIL POSTS SHALL BE 6 FT. 3 IN. CENTER TO CENTER (DESIGN B), EXCEPT WHERE NOTED.

THE LATEST APPROVED VERSION OF STANDARD PLATES SHOWN OR AS INDICATED IN THE PLANS SHALL APPLY.

1. THRIE BEAM BULLNOSE, SEE SHEET NO. 128 FOR DETAILS.
2. FOR THE REQUIRED LENGTH SEE ROAD DESIGN MANUAL CHAPTER 10.
3. 0.04 FT./FT. CROSS SLOPE TYPICAL, 0.10 FT./FT. CROSS SLOPE MAXIMUM.
4. 1:10 OR FLATTER SLOPE P.I.. APPROACH GRADING VARIES WITH TERMINAL TYPE.
5. PLATE BEAM GUARDRAIL ATTACHMENTS TO FIXED OBJECTS REQUIRE AN APPROVED TRANSITION SECTION.
6. FOR MEDIANS WIDER THAN THE 14 FT. 2-1/2 IN., BEFORE TAPERING THE APPROACH SIDE, TAPER THE OPPOSING SIDE AS SHOWN ON THE BULLNOSE DESIGN DETAIL. APPROACH TAPER SHOULD NOT EXCEED 1:25 IF THE BARRIER IS WITHIN THE SHY LINE OR 1:15 IF IT IS OUTSIDE.
7. GROUT MIX (BY VOLUME: 1 PART CEMENT [TYPE 1A], 14 PARTS SAND, 5 PARTS WATER).
8. PLACE FRONT FACE OF W-BEAM DIRECTLY ABOVE FRONT FACE OF CURB.
9. 1:10 SLOPE OR FLATTER.

S.P. 179-020-031 S.P. 019-605-028

STANDARD SHEET NO. 5-297.601 (2 OF 3)	TITLE: GUARDRAIL INSTALLATIONS AT MEDIANS AND END TREATMENTS
STANDARD APPROVED: MARCH 23, 2011	

STATE PROJ. NO. 1901-148 (TH 13) SHEET NO. 124 OF 442 SHEETS

PLOTTED/REVISED: 13-JUN-2012 10:10
DISTRICT #: METRO
USER NAME: s601_2_spn
PATH & FILENAME: Projects/DM_ROS/013/1901/148/Design/PlanSheets/Standard Plans/s601_2_spn.dgn
FILE NAME: s601_2_spn

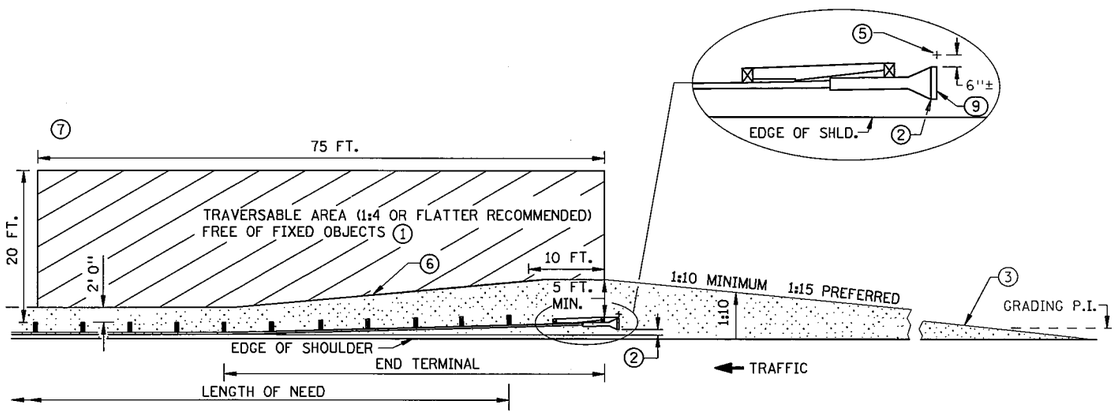

PLAN VIEW

(PROPRIETARY TANGENT TERMINAL SHOWN AS EXAMPLE)

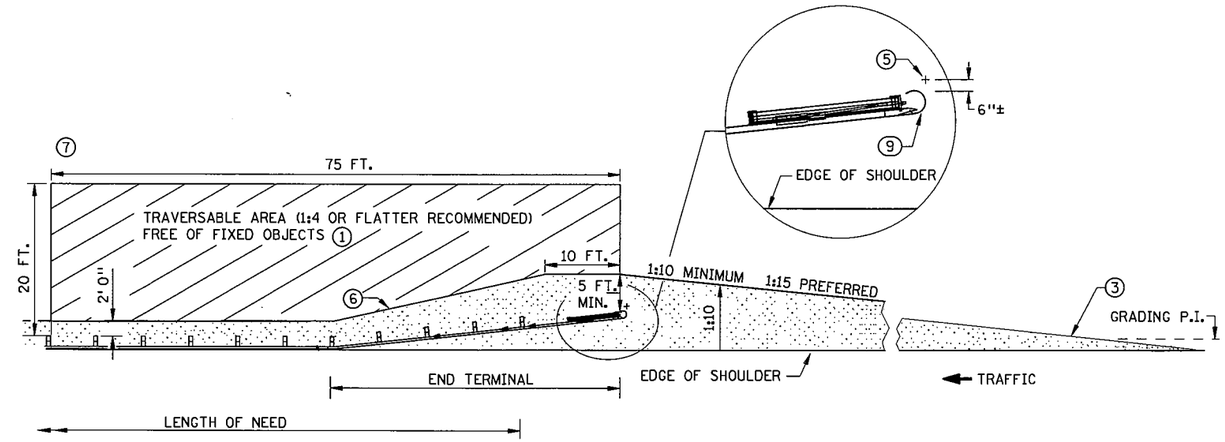

PLAN VIEW ⑧

(PROPRIETARY FLARED TERMINAL SHOWN AS EXAMPLE)

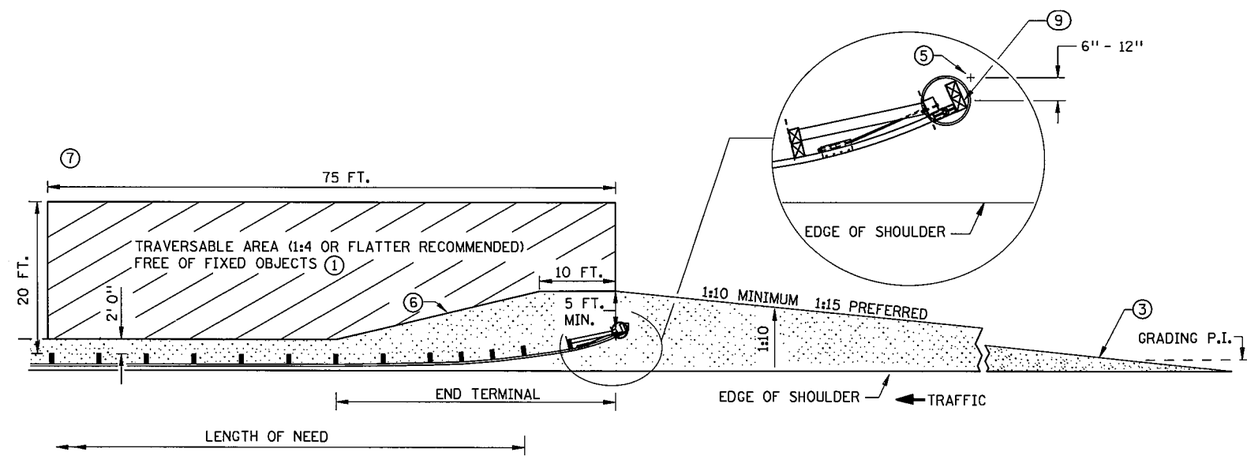

PLAN VIEW ④ ⑧

(ELT)

NOTES:

ALL CROSS SLOPES ARE IN FOOT/FOOT UNLESS OTHERWISE NOTED.

ALL GUARDRAIL POSTS SHALL BE 6 FT. 3 IN. CENTER TO CENTER (DESIGN B), EXCEPT WHERE NOTED.

CHANGES (TO SUBJECTS COVERED BY THIS SHEET) INDICATED IN THE PLANS OR ON PLATES WITH MORE RECENT APPROVAL DATES SHALL APPLY.

GRADING AND DRAINAGE HARDWARE ARE NOT INCIDENTAL TO GUARDRAIL INSTALLATION.

① SLOPES BETWEEN 1:3 AND 1:4 PERMITTED WHEN 1:4 OR FLATTER IS NOT POSSIBLE. FOR SLOPES STEEPER THAN 1:3 THE AREA IMMEDIATELY BEHIND AND BEYOND THE END TERMINAL SHOULD, AT LEAST, BE SIMILAR IN CROSS SECTION TO THE UNSHIELDED ROADSIDE AREA UPSTREAM OF THE END TERMINAL.

② THE LAST 50 FT. OF TANGENT TERMINALS CAN BE FLARED AT 1:50 TAPER.

③ WHEN GRADING PLATFORMS ARE BUILT, THEY MUST BE SMOOTHLY TRANSITIONED TO EXISTING SIDE SLOPE SO THE ENTIRE ROADSIDE APPROACH TO THE BARRIER REMAINS TRAVERSABLE, AS WELL AS THE AREA IMMEDIATELY BEHIND IT.

④ SEE STANDARD PLATE 8329.

⑤ SNOWPLOW MARKER (X4-5) WITH A 2 LB./FT. DELINEATOR POST 8 FT. LONG (SPEC. 3401) DRIVEN INTO THE GROUND. EXTEND 3 FT. ABOVE TERMINAL. THE MARKER IS INCIDENTAL FOR WHICH NO DIRECT PAYMENT WILL BE MADE. MARK BOTH THE BEGINNING AND END OF PLATE BEAM GUARDRAIL INSTALLATION.

⑥ 1:10 OR FLATTER SLOPE P.I.

⑦ GRADUALLY BLEND SLOPE FROM TRAVERSABLE AREA TO STEEP EXISTING SLOPE (WHEN SLOPE IS STEEPER THAN 1:6).

⑧ IF THE TERRAIN BEYOND THE TERMINAL END AND IMMEDIATELY BEHIND THE BARRIER IS NOT SAFELY TRAVERSABLE, A TANGENT (ENERGY- ABSORBING) TERMINAL SHALL BE USED.

⑨ MARK THE APPROACH END OF PLATE BEAM GUARDRAIL INSTALLATIONS WITH A STRIPED OBJECT MARKER SIZED TO FIT THE END TERMINAL, HAVING ALTERNATING BLACK AND REFLECTIVE YELLOW (WIDE ANGLE PRISMATIC RETROREFLECTIVE SHEETING). STRIPES SHALL SLOPE DOWNWARD AT A 45 DEGREE ANGLE TOWARD THE SIDE ON WHICH TRAFFIC PASSES. FOR FLAT END TREATMENTS THE OBJECT MARKER SHALL FIT INSIDE THE RECESSED AREA. FOR ROUNDED END TREATMENTS THE OBJECT MARKER SHALL WRAP AROUND THE CIRCULAR END AND BE MOUNTED SO THE TOP OF THE OBJECT MARKER LINES UP WITH THE TOP OF THE END TREATMENT.

S.P. 179-020-031 S.P. 019-605-028

STANDARD SHEET NO. 5-297.601 (3 OF 3)	TITLE: GUARDRAIL INSTALLATIONS AT MEDIANS & END TREATMENTS (FOR NEW CONSTRUCTION AND RETROFITS WITHOUT SITE RESTRICTIONS)
STANDARD APPROVED: MARCH 23, 2011	

STATE PROJ. NO. 1901-148 (TH 13) SHEET NO. 125 OF 442 SHEETS

PLOTTED/REVISED: 13-JUN-2012 10:10
DISTRICT #: METRO
USER NAME: s601_3_spn
PATH & FILENAME: Projects/DM_ROS/013/1901/148/Design/PlanSheets/Standard Plans/s601_3_spndgn
FILE NAME: s601_3_spn

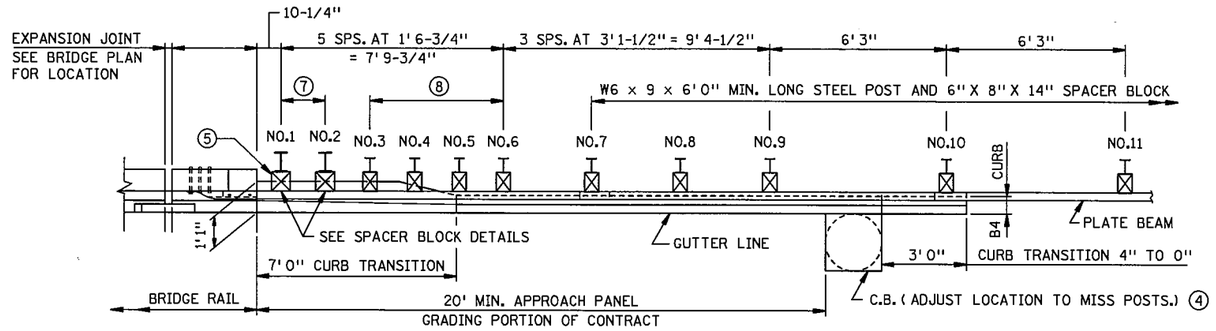

PLAN

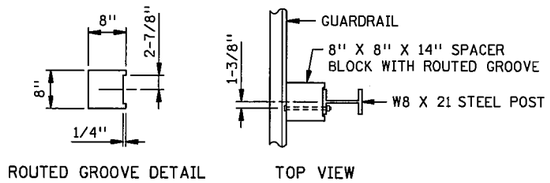

POSTS 1 AND 2

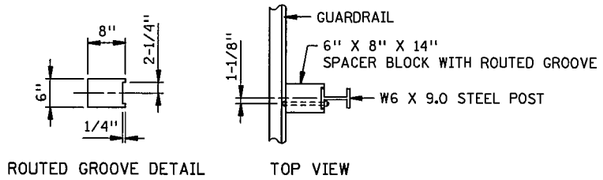

POSTS 3 - 11

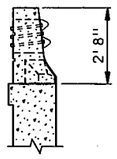

SECTION A - A
F SHAPE RAIL (F BARRIER)
(PARALLEL WINGWALL SHOWN)

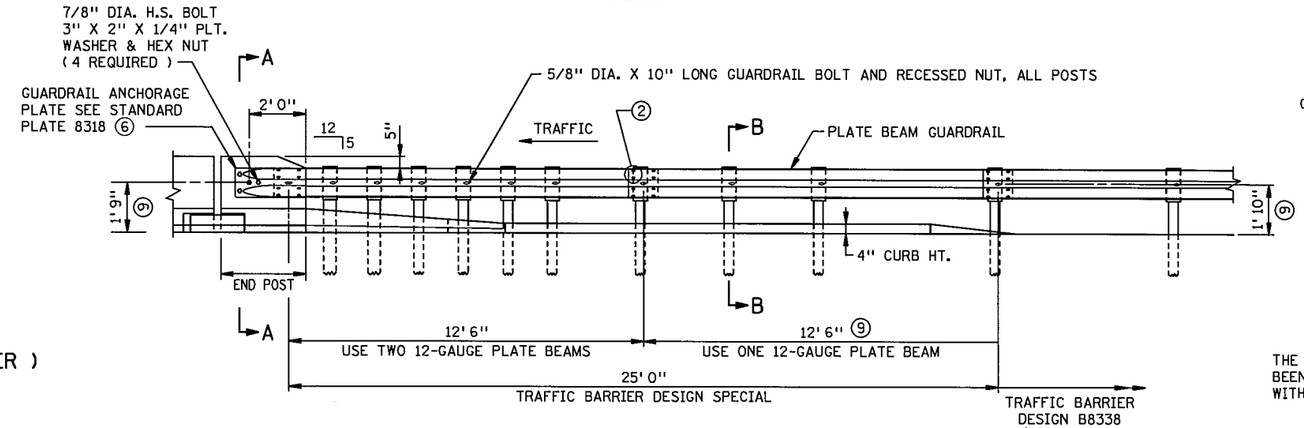

ELEVATION

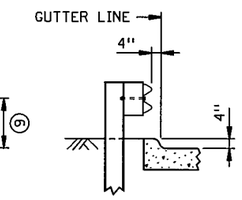

SECTION B-B
THE TRANSITION SECTION HAS
BEEN TESTED AND APPROVED
WITH THE CURB PLACED AS SHOWN

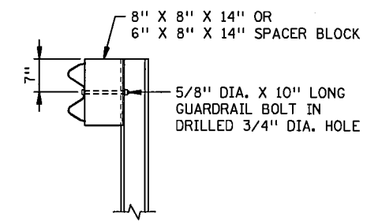

END VIEW
SPACER BLOCK DETAILS

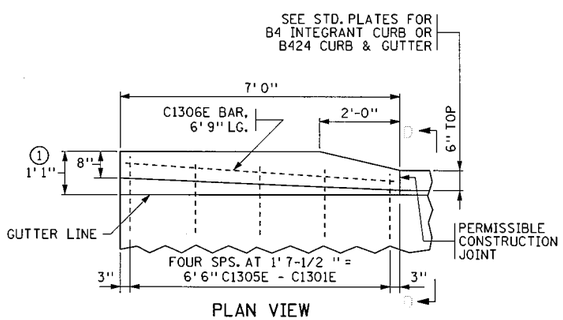

PLAN VIEW

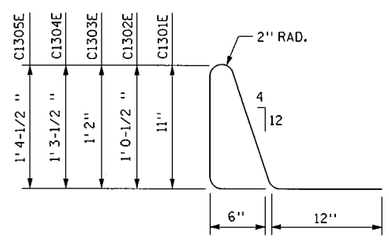

C1301E - C1305E ③

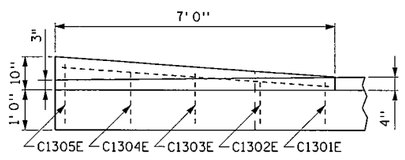

INSIDE ELEVATION
(FOR F - SHAPE SAFETY RAIL)

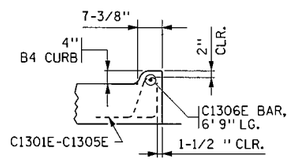

SECTION D-D

CURB TRANSITION DETAILS
F-SHAPE SAFETY BARRIER TO B4 CURB
WITH W-BEAM GUARDRAIL BARRIER

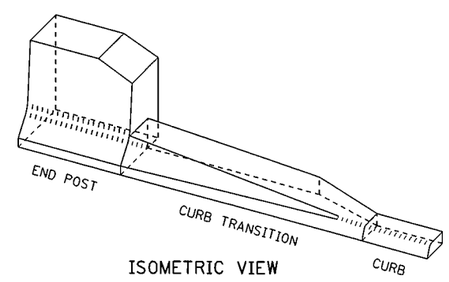

ISOMETRIC VIEW

NOTES:

ALL REBARS ARE IN METRIC DESIGNATIONS

① FROM BACK SIDE OF CURB TRANSITION TO GUTTERLINE.

② 5/8" DIA. X 1-1/4" LONG GUARDRAIL BOLTS AND NUTS TYPICAL AT SPLICES.

③ AS PER MNDOT 3301, USE EPOXY COATED GRADE 60 REINFORCEMENT BARS.

④ SEE ROAD PLANS TO VERIFY ACTUAL DIMENSION AND LOCATION.

⑤ ADDITIONAL BLOCKING MAY BE REQUIRED TO CLEAR BRIDGE STRUCTURE. VERIFY IN FIELD.

⑥ SANDWICH ANCHOR PLATE BETWEEN RAIL BEAMS.

⑦ POSTS 1 AND 2 TO BE W8 x 21 X 8'0" MINIMUM LONG STEEL POST AND 8" X 8" X 14" SPACER BLOCK.

⑧ POSTS 3, 4, 5, AND 6 TO BE W6 x 9 X 6'0" MIN. LONG STEEL POST AND 6" X 8" X 14" SPACER BLOCK.

⑨ GUARDRAIL CENTERLINE HEIGHT IS 1'-9" FROM 0' TO 12'-6" FROM BRIDGE. HEIGHT TRANSITIONS FROM 1'-9" TO 1'-10" BETWEEN 12'-6" AND 25' FROM BRIDGE.

S.P. 179-020-031 S.P. 019-605-028 TRAFFIC BARRIER DESIGN SPECIAL

STANDARD SHEET NO. 5-297.603	TITLE: W-BEAM TRANSITION TO CONCRETE F-SHAPE SAFETY RAIL WITH APPROACH CURB (STEEL POST)
STANDARD APPROVED: MARCH 23, 2011	

STATE PROJ. NO. 1901-148 (TH 13) SHEET NO. 126 OF 442 SHEETS

PLOTTED/REVISED: 14-JUN-2012 08:25
DISTRICT #: METRO
USER NAME: s603_l_spn
PATH & FILENAME: Projects/DM_ROS/013/190/148/Design/PlanSheets/Standard Plans/s603_l_spn.dgn
FILE NAME: s603_l_spn

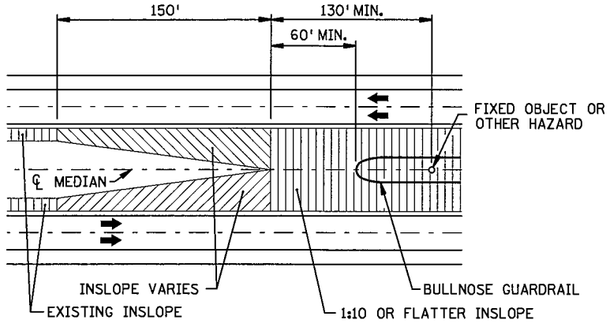

GRADING AT BULLNOSE
(DEPRESSED MEDIAN)

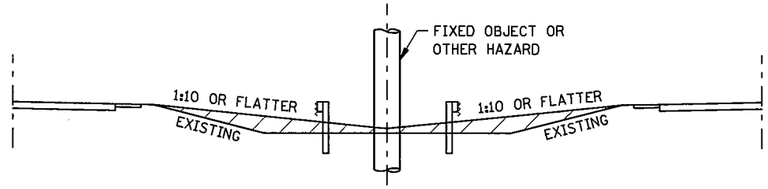

MEDIAN GRADING SECTION
(AT FIXED OBJECT)

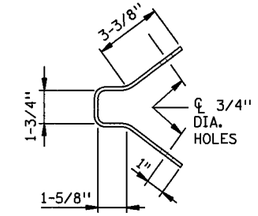

END VIEW
GUARDRAIL ANCHOR BRACKET

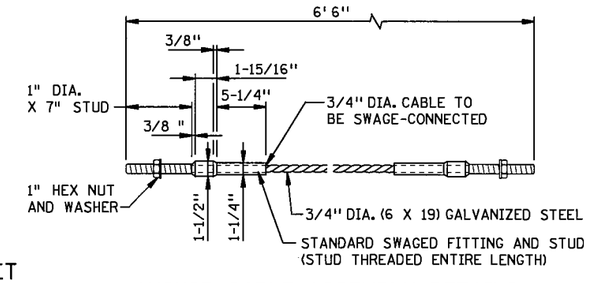

ANCHOR CABLE ASSEMBLY DETAILS

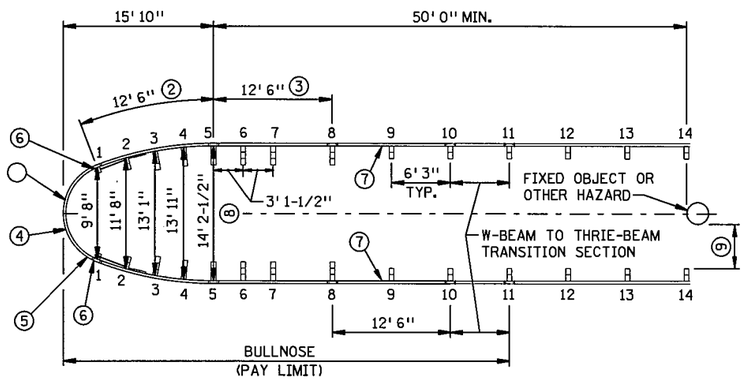

PLAN VIEW
DETAILS OF BULLNOSE

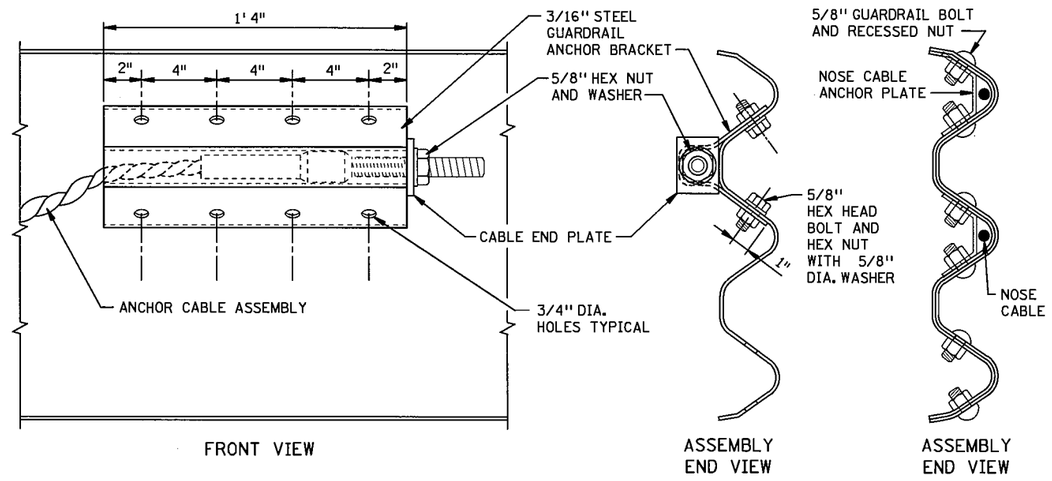

GUARDRAIL ANCHOR BRACKET DETAILS

NOSE CABLE ANCHOR PLATE DETAILS

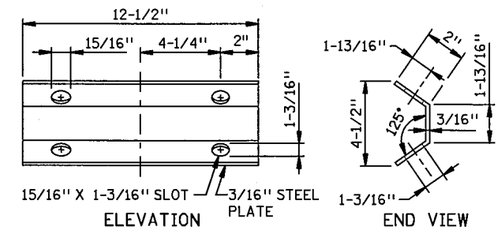

NOSE CABLE ANCHOR PLATE

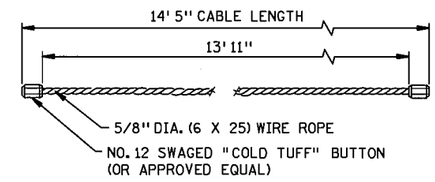

NOSE CABLE

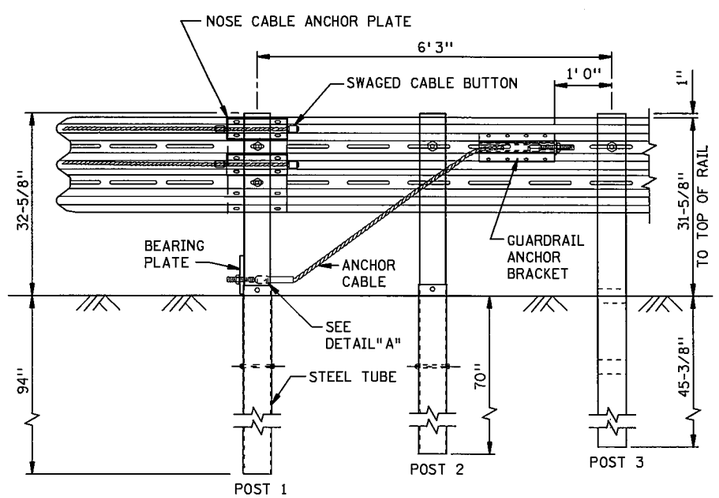

ELEVATION
BULL NOSE ASSEMBLY

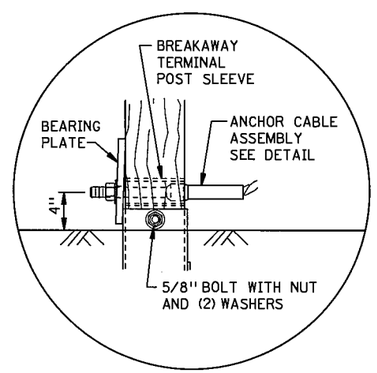

DETAIL "A"

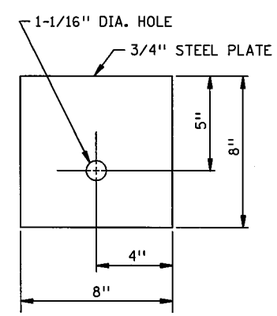

BEARING PLATE

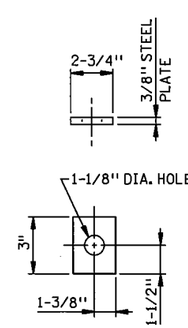

CABLE END PLATE

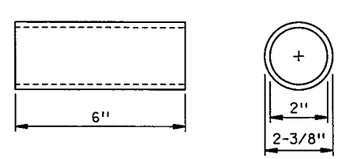

BREAKAWAY TERMINAL POST SLEEVE

NOTES:

OTHER ANCHOR CABLE ASSEMBLIES HAVING 40,000 LBS. MIN. BREAKING STRENGTH MAY BE USED.

ALTERNATE HARDWARE DESIGNS WILL BE CONSIDERED FOR APPROVAL PROVIDED THEIR CONNECTION DETAILS, FOR THE PURPOSE OF MAINTENANCE SUBSTITUTIONS, ARE COMPATIBLE WITH THE DETAILS OF THIS STANDARD AND THEIR OPERATING CHARACTERISTICS ARE SIMILAR TO THOSE OF THE HARDWARE SHOWN IN THIS STANDARD.

BOLTS AND ALL NECESSARY HARDWARE SHALL BE GALVANIZED IN ACCORDANCE WITH ASTM A 153.

SEE "A GUIDE TO STANDARDIZED HIGHWAY BARRIER RAIL HARDWARE" FOR ADDITIONAL HARDWARE INFORMATION. THE MN/DOT STANDARD SPECIFICATIONS FOR HIGHWAY CONSTRUCTION SHALL GOVERN.

1. SLOTTED RAIL NO. 1, 12' 6", SHOP BEND TO R=5' 3"
2. SLOTTED RAIL NO. 2, 12' 6", SHOP BEND TO R=34' 2"
3. SLOTTED RAIL NO.3, 12' 6", TANGENT
4. U-BOLT CABLE CLIPS (3 PER CABLE) SPACED OUT ON NOSE, TO HOLD CABLE TO BACKSIDE OF THE RAIL.
5. NOSE CABLE W/SWAGED END BUTTONS
6. NOSE CABLE ANCHOR PLATE (BACKSIDE OF SPLICE).
7. THRIE-BEAM GUARDRAIL, 12' 6".
8. MEASUREMENTS ARE FROM BACK OF RAIL TO BACK OF RAIL. FOR GUARDRAIL LAPPING DETAIL, SEE SHEET 2 OF 2.
9. MINIMUM DESIGN DEFLECTION FOR BARRIER USED.

S.P. 179-020-031 S.P. 019-605-028

STANDARD SHEET NO. 5-297.611 (1 OF 3)	THRIE BEAM BULLNOSE GUARDRAIL FOR MEDIANS (14' 2-1/2" WIDTH)
STANDARD APPROVED: AUGUST 20, 2001	

REVISION DATE 7-11-02

STATE PROJ. NO. 1901-148 (TH 13) SHEET NO. 127 OF 442 SHEETS

PLOTTED/REVISED: 14-JUN-2012 10:31
DISTRICT #: METRO
USER NAME: s611_l_spn
PATH & FILENAME: Projects/DM_ROS/013/1901/148/Design/StandardPlans/s611_l_spn.dgn
FILE NAME: s611_l_spn

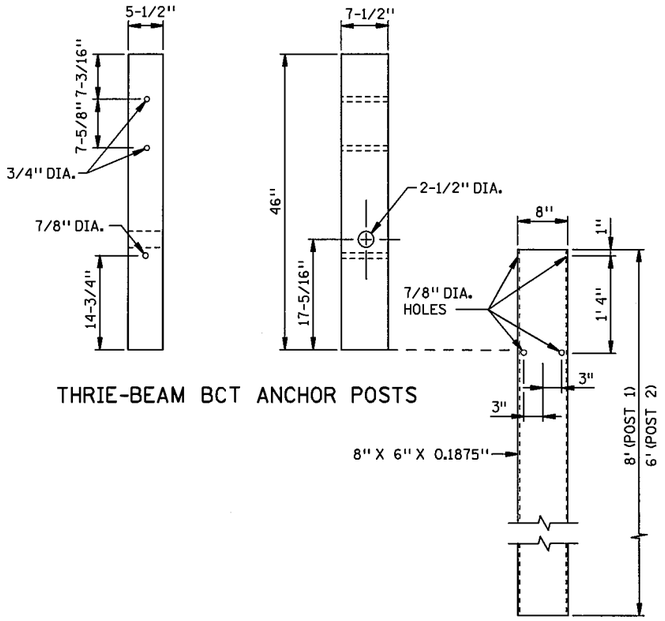

THRIE-BEAM BCT ANCHOR POSTS

STEEL TUBE

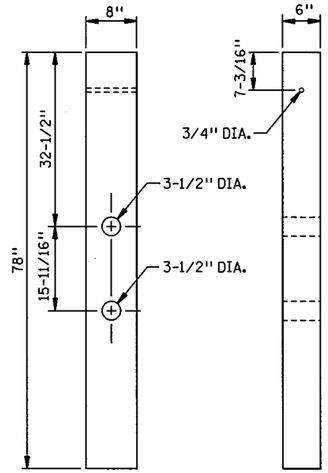

THRIE-BEAM CRT POSTS

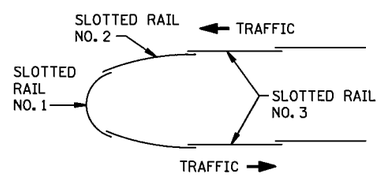

GUARDRAIL OVERLAPPING DETAIL

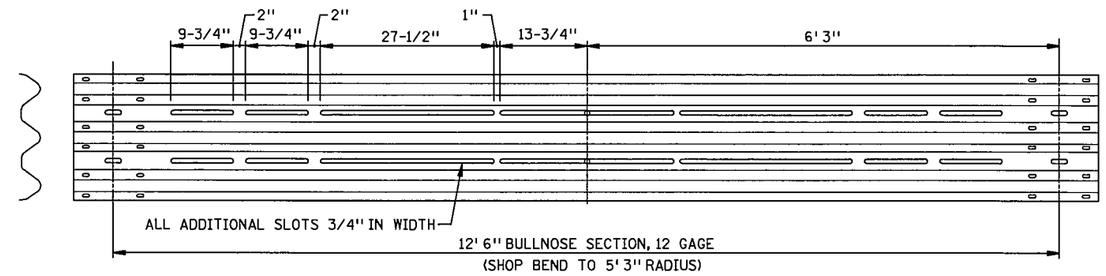

SLOTTED RAIL NO. 1

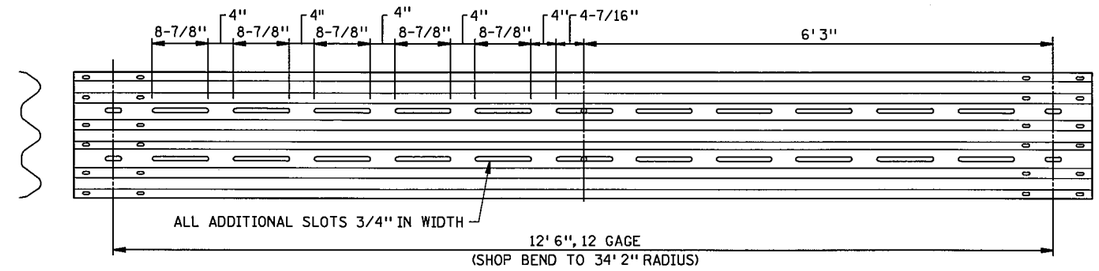

SLOTTED RAIL NO. 2

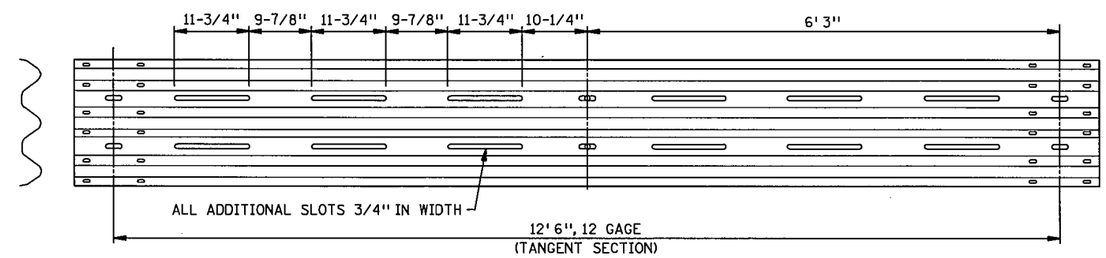

SLOTTED RAIL NO. 3

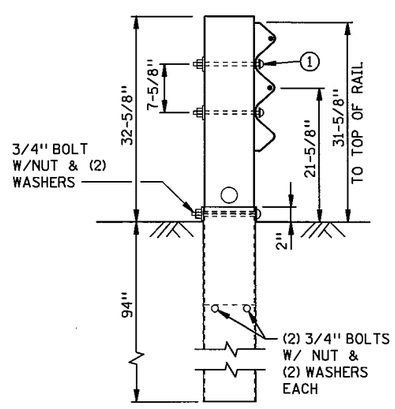

THRIE-BEAM BCT POST
(WITH 96" STEEL TUBE)
POST NO. 1

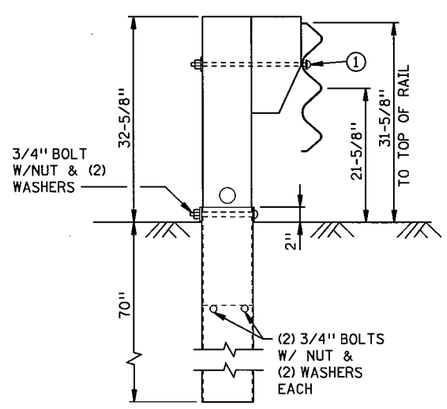

THRIE-BEAM BCT POST
(WITH 72" STEEL TUBE
AND 14" TAPERED BLOCK)
POST NO. 2

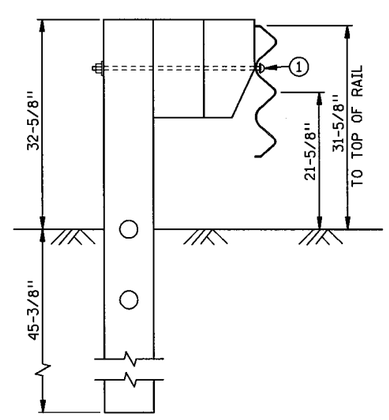

THRIE-BEAM CRT POST
(78" LONG WITH 14" BLOCK
AND 14" TAPERED BLOCK)
POST NO. 3, 4, 5, 6, 7, & 8

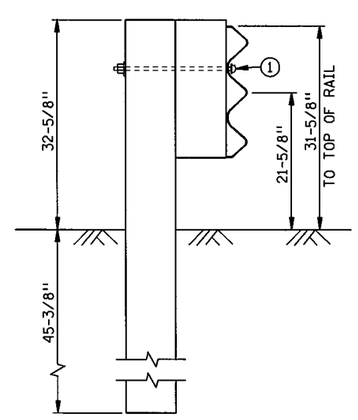

THRIE-BEAM POST
(6" X 8" X 78" LONG POST
WITH 6" X 8" X 22" BLOCK)
POST NO. 9 & 10

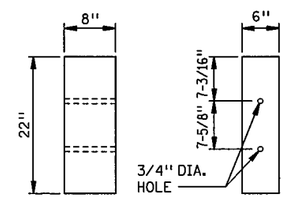

STANDARD
22" LONG BLOCK

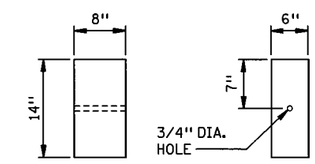

STANDARD BLOCK

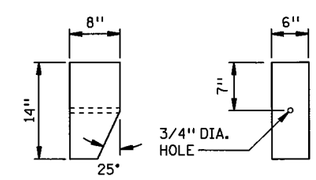

TAPERED BLOCK

NOTES:

1. 5/8" DIA. BUTTON HEAD BOLT X LENGTH AS REQUIRED, SECURED WITH WASHER AND HEX NUT.

S.P. 179-020-031 S.P. 019-605-028

STANDARD SHEET NO. 5-297.611 (2 OF 3)	TITLE: THRIE BEAM BULLNOSE GUARDRAIL FOR MEDIANS (14'2-1/2" WIDTH)
STANDARD APPROVED: AUGUST 20, 2001	
REVISION DATE 7-11-2002	STATE PROJ. NO. 1901-148 (TH 13) SHEET NO. 128 OF 442 SHEETS

PLOTTED/REVISED: 14-JUN-2012 10:32
DISTRICT #: METRO
USER NAME: s611_2_spn
PATH & FILENAME: Projects/DM_ROS/013/190/148/Design/StandardPlans/s611_2_spn.dgn
FILE NAME: s611_2_spn

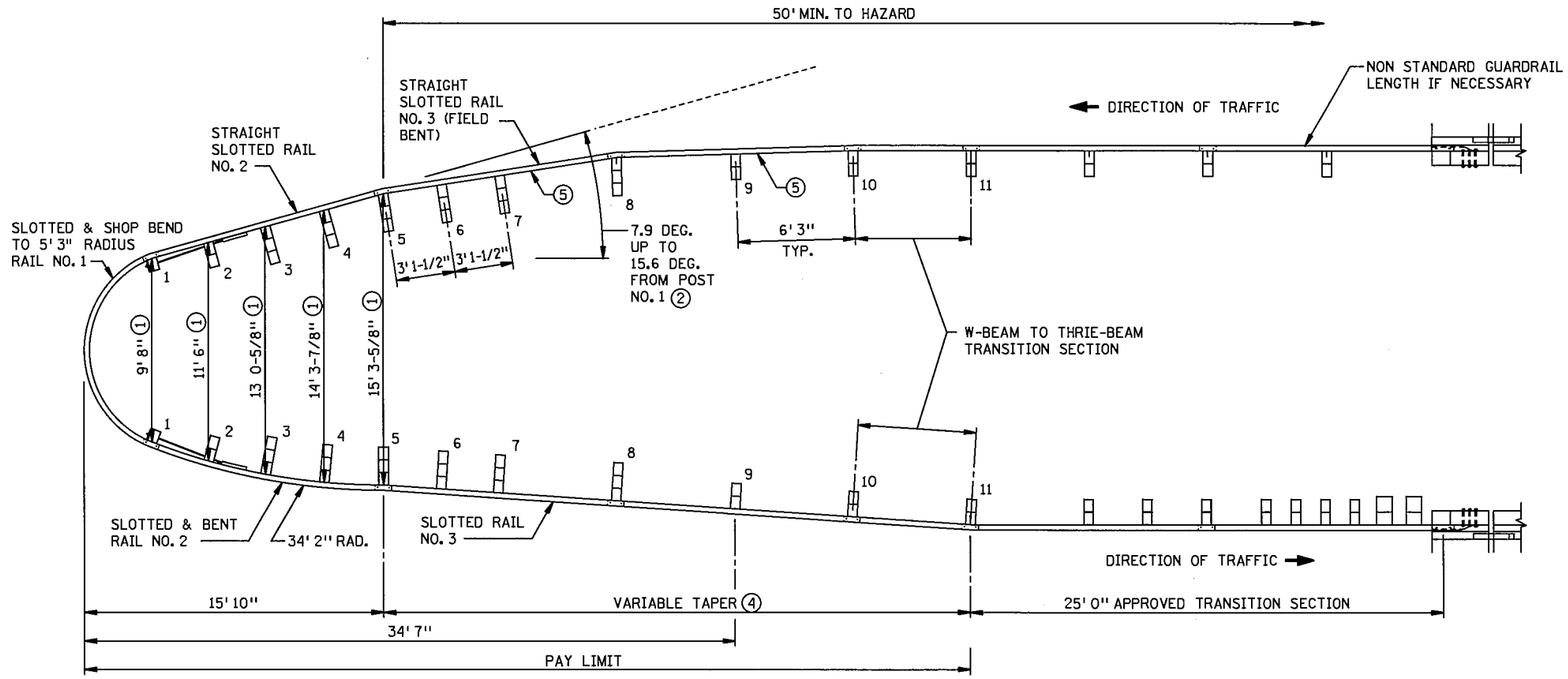

PLAN VIEW

WIDENED BULLNOSE DESIGN ③

NOTES:

① POST SPACINGS ACROSS THE BARRIER ARE MEASURED AS PERPENDICULAR DISTANCE ACROSS THE BARRIER FROM THE CENTER OF POST.

② TAPER BEGINNING AT POST NO. 1 MUST CONTINUE TO POST NO. 5, PAST POST NO. 5, TAPER MAY END OR BE EXTENDED UP TO 15.6 DEGREES TO FIT VARIABLE MEDIAN WIDTHS.

③ THRIE BEAM BULLNOSE, SEE SHEET NO. ___ FOR DETAILS.

④ FOR MEDIANS WIDER THAN 14' 2 1/2", BEFORE TAPERING THE APPROACH SIDE, TAPER THE OPPOSING SIDE AS SHOWN ON THE BULLNOSE DESIGN DETAIL. APPROACH TAPER SHOULD NOT EXCEED 1:25 IF THE BARRIER IS WITHIN THE SHY LINE OR 1:15 IF IT IS OUTSIDE.

⑤ THRIE BEAM MAY BE FIELD BENT UP TO 18" IN A 12' 6" LENGTH (APPROX. 6.9 DEG.). ADJUST BENDS TO FIT BULLNOSE TO SITE. SLOTTED RAIL NO. 2 ON OPPOSING SIDE MAY BE USED STRAIGHT OR NORMAL (SHOP BEND TO 34' 2" RAD.). SLOTTED RAIL NO. 3 ON OPPOSING SIDE DOES NOT HAVE TO BE SHOP BENT (BEND IN FIELD).

S.P. 179-020-031 S.P. 019-605-028

STANDARD PLAN SHEET NO. 5-297.611 (3 OF 3)	THRIE BEAM BULLNOSE GUARDRAIL FOR MEDIANS (WIDER THAN 14' 2-1/2")
STANDARD APPROVED: MAY 30, 2002	

REVISION DATE 7-11-02

STATE PROJ. NO. 1901-148 (TH 13) SHEET NO. 129 OF 442 SHEETS

PLOTTED/REVISED: 14-JUN-2012 10:33
DISTRICT #: METRO
USER NAME: s611_3_spn
PATH & FILENAME: Projects/DM_ROS/013/1901/148/Design/StandardPlans/s611_3_spn.dgn
FILE NAME: s611_3_spn

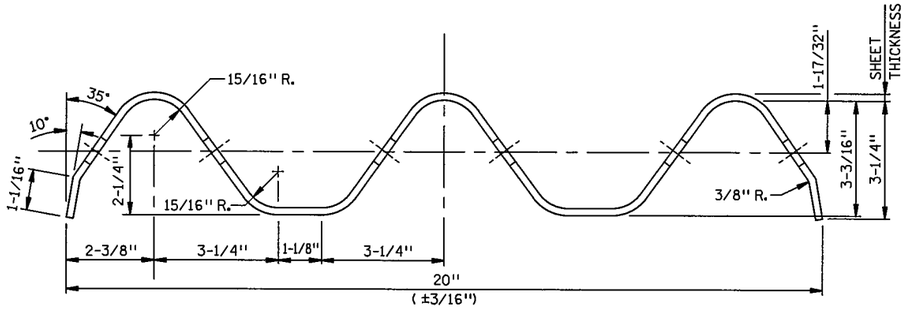

SECTION A-A

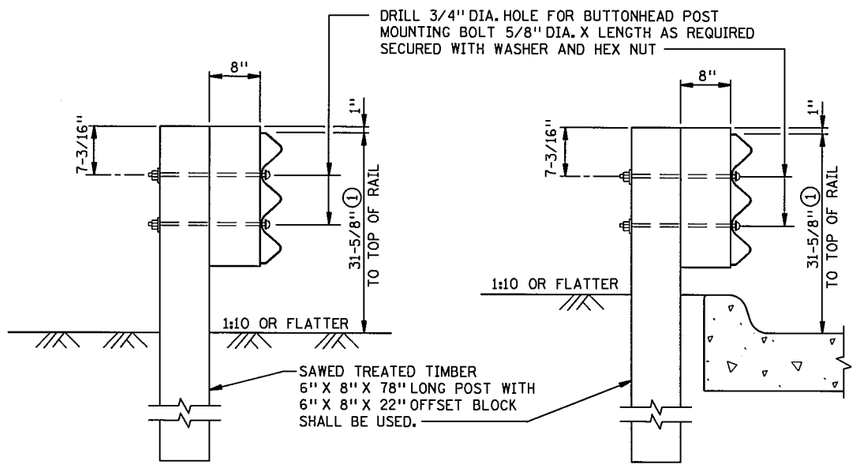

SIDE VIEW WITHOUT CURB

SIDE VIEW WITH CURB

THRIE-BEAM AND POST ASSEMBLY

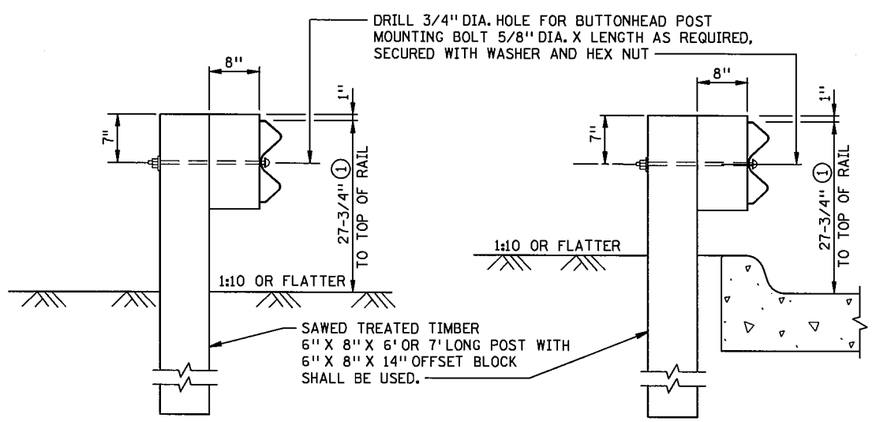

SIDE VIEW WITHOUT CURB

SIDE VIEW WITH CURB

W-BEAM AND POST ASSEMBLY

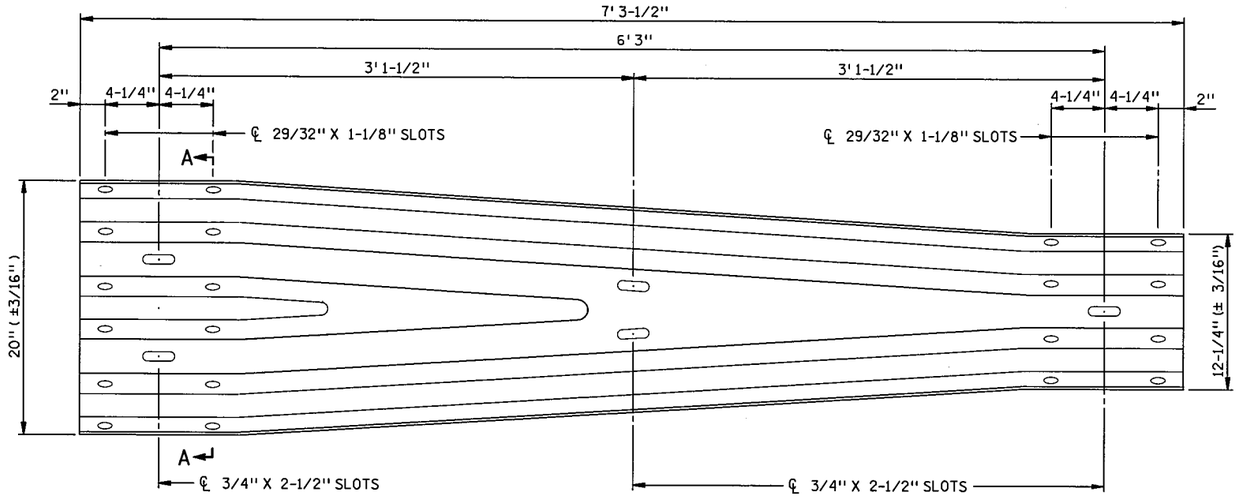

DETAILS OF W-BEAM TO THRIE BEAM TRANSITION SECTION

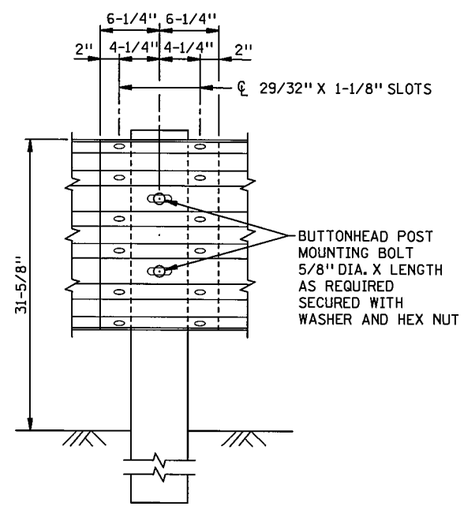

RAIL ELEMENT SPLICING AND POST MOUNTING DETAIL

NOTES:

NOT NCHRP-350 APPROVED.

IN LOCATIONS WITH CURB THE FACE OF THE GUARDRAIL SHALL BE LOCATED AT THE FACE OF THE CURB. THE HEIGHT OF THE GUARDRAIL SHALL BE MEASURED FROM THE GUTTER TO THE TOP OF THE RAIL.

BOLTS AND ALL NECESSARY HARDWARE SHALL BE GALVANIZED IN ACCORDANCE WITH ASTM A 153.

SEE "A GUIDE TO STANDARDIZED HIGHWAY BARRIER RAIL HARDWARE" FOR ADDITIONAL HARDWARE INFORMATION. THE MN/DOT STANDARD SPECIFICATIONS FOR HIGHWAY CONSTRUCTION SHALL GOVERN.

① DIFFERENCE IN HEIGHT BETWEEN THE TRANSITION AND INPLACE OR STANDARD W-BEAM RAIL SHALL BE MADE UP IN THE FIRST FULL W-BEAM RAIL SECTION FOLLOWING THE TRANSITION.

S.P. 179-020-031 S.P. 019-605-028

STANDARD SHEET NO. 5-297.614	TITLE: W-BEAM TO THRIE BEAM TRANSITION
STANDARD APPROVED: AUGUST 20, 2001	

STATE PROJ. NO. 1901-148 (TH 13) SHEET NO. 130 OF 442 SHEETS

PLOTTED/REVISED: 14-JUN-2012 10:34
DISTRICT #: METRO
USER NAME: s614_l_spn
PATH & FILENAME: Projects/DM_ROS/013/1901/148/Design/StandardPlans/s614_l_spn.dgn
FILE NAME: s614_l_spn

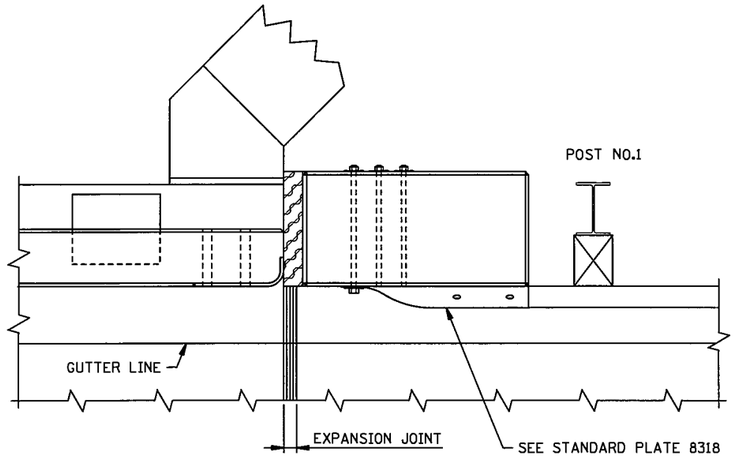

PLAN VIEW
(45° WINGWALL SHOWN)

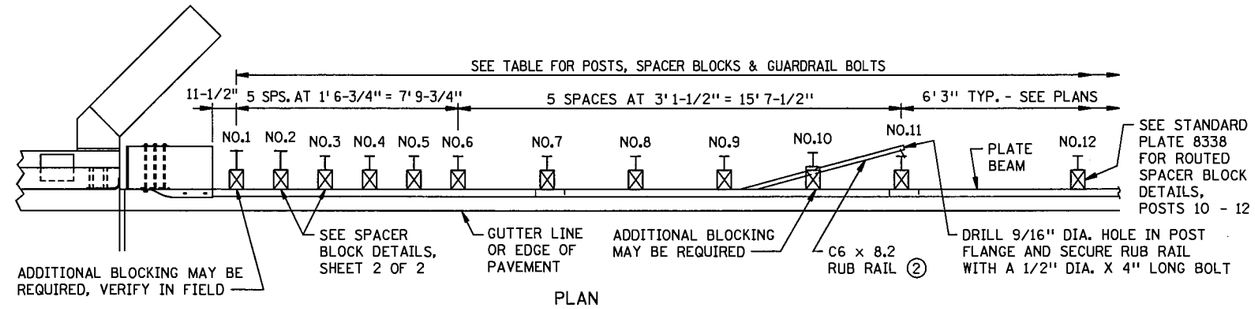

PLAN

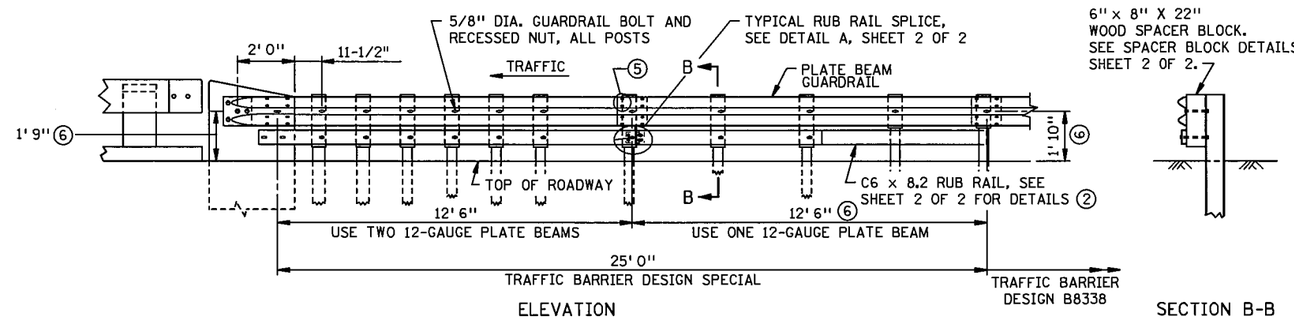

ELEVATION

SECTION B-B

GENERAL ASSEMBLY DETAILS

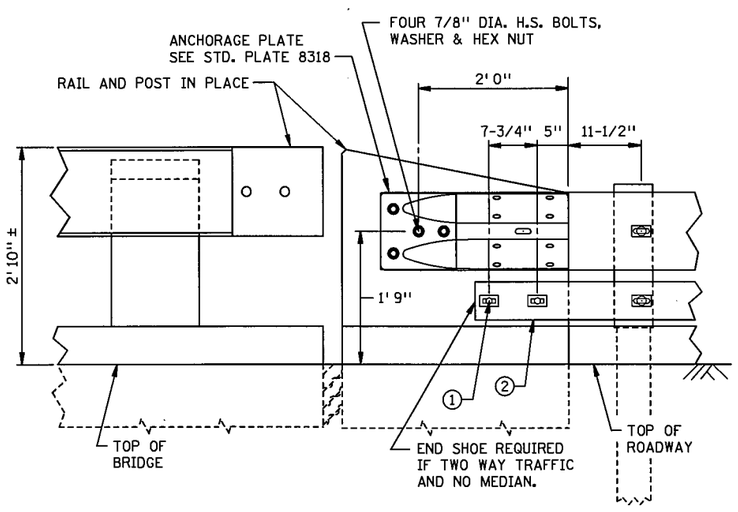

INSIDE ELEVATION

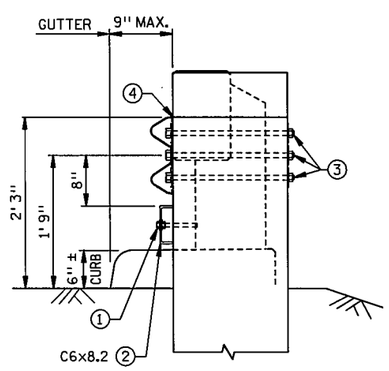

END VIEW

CONNECTION DETAILS

POST, SPACER BLOCK & BOLT TABLE

DESCRIPTION	POST NO.	SIZE
POST	1 & 2	W8 X 21 X 8' 0" MIN. LONG
	3 - 12	W6 X 9 X 6' 0" MIN. LONG
SPACER BLOCK	1 - 9	6" X 8" X 22"
	10 - 12	6" X 8" X 14"
GUARDRAIL BOLT & RECESSED NUT	1 - 12	5/8" DIA. X 10" - GUARDRAIL
	1 - 9	5/8" DIA. X 12" - RUB RAIL

NOTES:

SOIL COMPACTION AT END POST AS PER SPEC. 2451.

GUARDRAIL CONNECTION SHALL BE THE SAME AS REQUIRED ON BRIDGE RAILINGS, SEE BRIDGE DETAILS MANUAL FOR ADDITIONAL INFORMATION.

(1) 5/8" DIA. BOLTS WITH APPROVED CONCRETE ANCHORS EMBEDDED 5" IN END POST. LOCATE CONCRETE ANCHORS TO MISS BRIDGE REINFORCEMENT

(2) RUB RAIL SHALL BE USED WHEN THERE IS NO CURBING ON APPROACH PANEL.

(3) 7/8" DIA. H.S. BOLT OR EQUAL THREADED ROD, 3" X 2" X 1/4" PLATE WASHER AND HEX NUT (4 REQUIRED).

(4) TIMBER BLOCKING MAY BE REQUIRED BEHIND GUARDRAIL CONNECTION AND RUB RAIL DEPENDING ON CURB WIDTH.

(5) 5/8" DIA. X 1-1/4" LONG GUARDRAIL BOLTS AND NUTS TYPICAL AT SPLICES.

(6) GUARDRAIL CENTERLINE HEIGHT IS 1'-9" FROM 0' TO 12'-6" FROM BRIDGE. HEIGHT TRANSITIONS FROM 1'-9" TO 1'-10" BETWEEN 12'-6" AND 25' FROM BRIDGE.

TRAFFIC BARRIER DESIGN SPECIAL

STANDARD SHEET NO. 5-297.619 (1 OF 2)	W-BEAM TRANSITION TO CONCRETE END POST WITH OR WITHOUT APPROACH CURB (STEEL POST)
STANDARD APPROVED: APRIL 2, 2012	

S.P. 179-020-031 S.P. 019-605-028

STATE PROJ. NO. 1901-148 (TH 13) SHEET NO. 131 OF 442 SHEETS

PLOTTED/REVISED: 14-JUN-2012 10:26
DISTRICT #: METRO
USER NAME: s619_l_spn
PATH & FILENAME: Projects/DM_ROS/013/1901/148/Design/StandardPlans/s619_l_spn.dgn
FILE NAME: s619_l_spn

PLOTTED/REVISED: 14-JUN-2012 10:28
DISTRICT #: METRO
USER NAME: s619_2_spn
PATH & FILENAME: Projects/DM_ROS/013/1901/148/Design/StandardPlans/s619_2_spn.dgn
FILE NAME: s619_2_spn

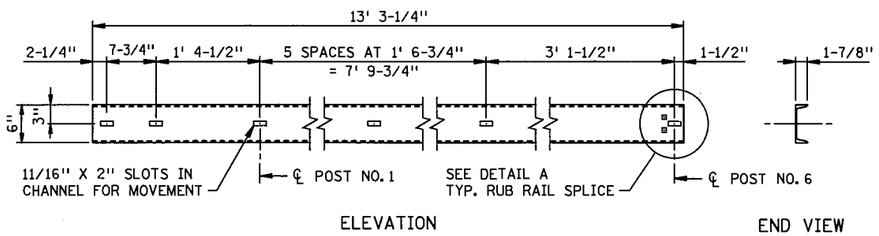

RUB RAIL STRAIGHT SECTION
NON-STANDARD RUB RAIL LENGTH

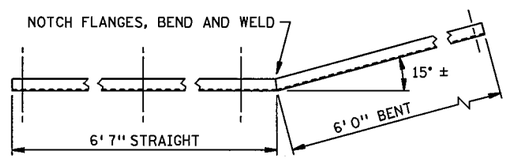

PLAN VIEW

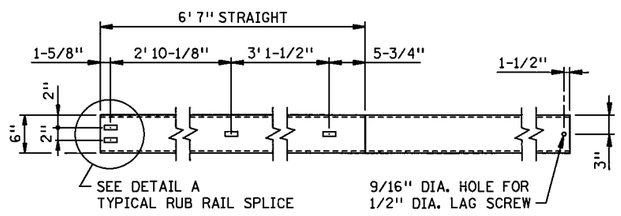

ELEVATION

RUB RAIL BENT SECTION
NON-STANDARD RUB RAIL LENGTH

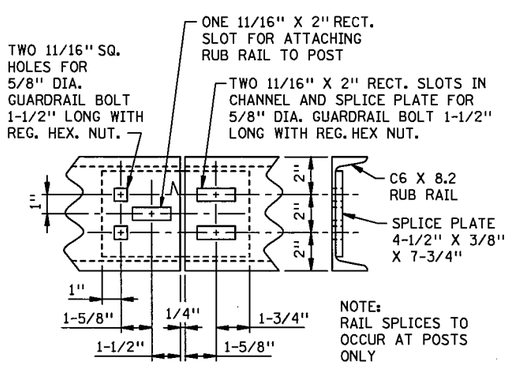

DETAIL A
TYPICAL RUB RAIL SPLICE

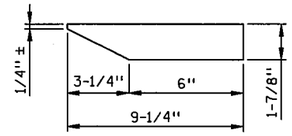

TOP & BOTTOM PLATES

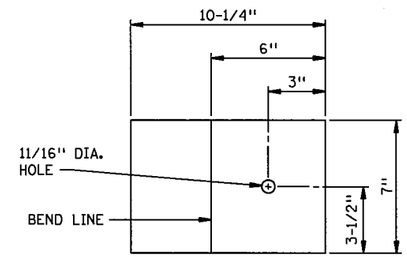

FRONT PLATE

END SHOE PLATE DETAILS
(1/4" PLATE)

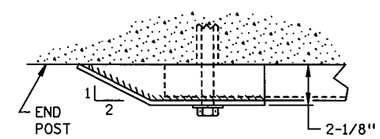

PLAN VIEW

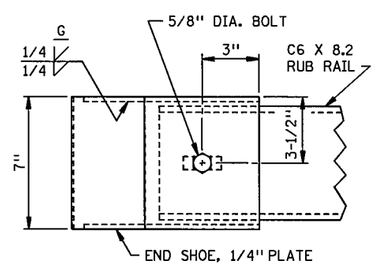

ELEVATION

RUB RAIL END SHOE ASSEMBLY
(USE IF TWO WAY TRAFFIC WITH NO MEDIAN)

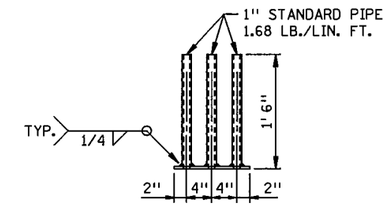

PLAN

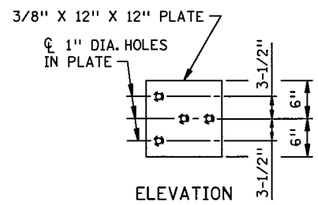

ELEVATION

GUARDRAIL CONNECTION DETAIL

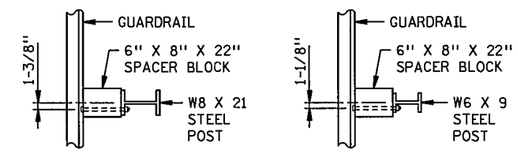

TOP VIEW
POSTS 1 & 2

TOP VIEW
POSTS 3 - 9

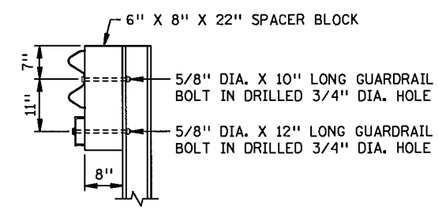

END VIEW

SPACER BLOCK DETAILS
POSTS 1 - 9

NOTES:
GALVANIZE ALL HARDWARE PER SPEC. 3392.

USE END SHOE ON RUB RAIL IF TWO WAY TRAFFIC WITH NO MEDIAN.

RUB RAIL IS C6 × 8.2

STRUCTURAL STEEL PER SPEC. 3306 UNLESS OTHERWISE NOTED.

ALL SLOTTED HOLES ARE 11/16" × 2".

ALL SQUARE HOLES ARE 11/16".

GALVANIZE STRUCTURAL SHAPES PER SPEC. 3394 AFTER FABRICATION UNLESS OTHERWISE NOTED.

(1) VERIFY DIMENSION IN FIELD.

TRAFFIC BARRIER DESIGN SPECIAL

STANDARD SHEET NO. 5-297.619 (2 OF 2)	W-BEAM TRANSITION TO CONCRETE END POST WITH OR WITHOUT APPROACH CURB (STEEL POST)
STANDARD APPROVED: APRIL 2, 2012	

S.P. 179-020-031 S.P. 019-605-028

STATE PROJ. NO. 1901-148 (TH 13) SHEET NO. 132 OF 442 SHEETS

STAGE 1 TRAFFIC

1. NBCSAH5, SOUTH OF WILLIAMS DR., USES SBCSAH5 AND E.B. WILLIAMS DR. TO GET TO MORGAN AVE.
2. TRAFFIC FROM WILLIAMS DR. TO GREENWOOD DR. WILL BE ALLOWED DURING CONSTRUCTION OF NBCSAH5 IN THAT LOCATION.
3. CLOSE THE NWFRONT RD. JUST PAST OLIVER AVE. S.
4. KEEP SOUTHERLY ENTRANCE TO BURNSVILLE MOTORS OPEN UNTIL CUL-DE-SAC IS CONSTRUCTED.
5. REMOVE CSAH5 MEDIAN STA. 109+00 TO 109+50 FOR ACCESS TO EASTERLY PARKING LOTS.
6. FOR STAGE 1A AND 1B TRAFFIC, SEE TRAFFIC CONTROL PLAN.
7. ALL OTHER ROADWAYS TO REMAIN OPEN TO TRAFFIC.

STAGE 1 CONSTRUCTION

1. CONSTRUCT TEMPORARY CROSS-OVERS FOR T.H.13 AT THE WEST AND EAST END OF THE PROJECT.
2. REMOVE ALL TOTAL TAKE BUILDINGS.
3. DO THE EXCAVATION, UTILITY WORK AND GRADING ON 126CON STA. 11+50 TO 23+00.
4. CONSTRUCT RETAINING WALL NO. 3 ON SOUTH SIDE OF THE SWRAMP.
5. CONSTRUCT LARGE STORM SEWER LINE FROM CSAH5, SWRAMP, UNDER TH13 AND ON 126TH CONNECTION TO OUTLET.
6. FOR THE DETAILS OF CONSTRUCTING THE LARGE STORM SEWER UNDER T.H.13, REFERRED TO AS STAGE 1A AND 1B, SEE SHEET NO. 96. OF THE PLAN, AND THE TRAFFIC CONTROL PLANS.
7. CONSTRUCT THE PROPOSED SANITARY AND STORM SEWER LINES UNDER T.H.13 AT APPROXIMATELY STA. 700+00, REFERRED TO AS STAGE 1A AND 1B. FOR DETAILS SEE SHEET NO. 96 AND THE TRAFFIC CONTROL PLAN.
8. CONSTRUCT NBCSAH5 STA. 103+00 TO 109+00 WITH THE CROSSINGS AT WILLIAMS DR. BUILT UNDER TRAFFIC.
9. CONSTRUCT SBCSAH5 STA 105+50 TO 109+00.
10. CONSTRUCT WILLIAMS DR. W.B. STA 40+12 TO 45+50.
11. CONSTRUCT RETAINING WALL NO. 8 AT WILLIAMS DR. W.B.
12. CONSTRUCT THE NWFRONT RD. TO BURNSVILLE MOTORS.
13. CONSTRUCT DRIVE2 TO BURNSVILLE MOTORS AT 126THCON STA. 15+75.
14. CONSTRUCT THE SOUTH FRONTAGE RD. TURN LANE AT WASHBURN AVE.
15. CONSTRUCT THE SANITARY AND STORM SEWER LINES FROM OUTLETS TO N.E. FRONTAGE RD., LEFT OF APPROXIMATE STA. 700+00.
16. CONSTRUCT TRAFFIC SIGNAL AT WILLIAMS DRIVE AND CSAH5.

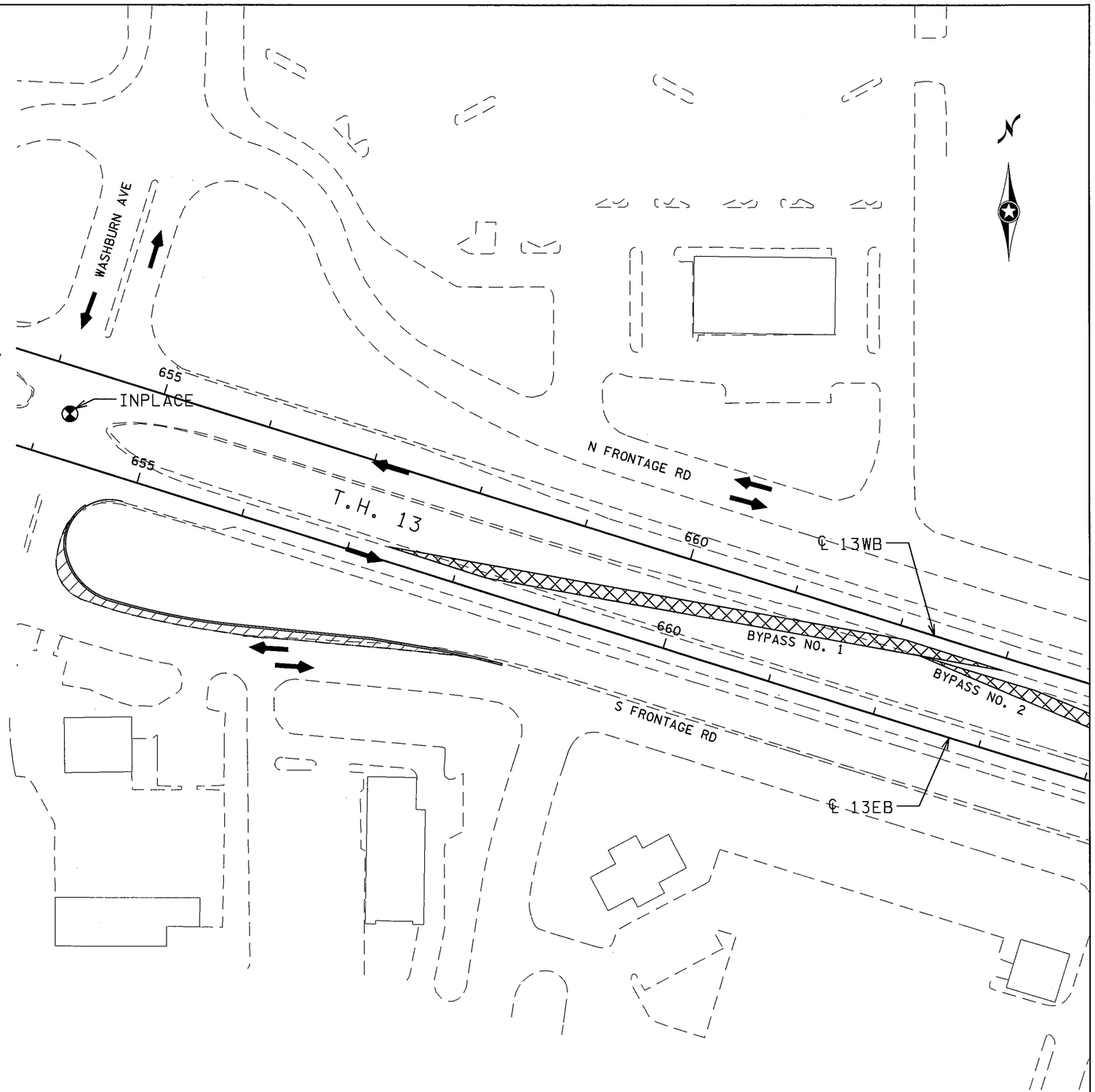

LEGEND

- PERMANENT CONSTRUCTION
- TEMPORARY CONSTRUCTION
- INPLACE PAVEMENT
- TRAFFIC FLOW

100

SCALE IN FEET

S.P. 179-020-031 S.P. 019-605-028

SHEET 1 OF 7

STAGING PLANS - STAGE 1

DRAWN BY: GLJ	CHECKED BY: HS	CERTIFIED BY _____ LICENSED PROFESSIONAL ENGINEER LIC. NO. 18520 DATE 6/18/12	STATE PROJ. NO. 1901-148 (T.H. 13)	SHEET NO. 133 OF 442 SHEETS

PLOTTED/REVISED: 13-JUN-2012 11:26
DISTRICT *: METRO
IPLOT NAME: d1901148_STG1_01
PATH & FILENAME: Projects/DM_ROS/013/1901/148/Design/PlanSheets/Staging/Stage1/d1901148_STG1_01.dgn

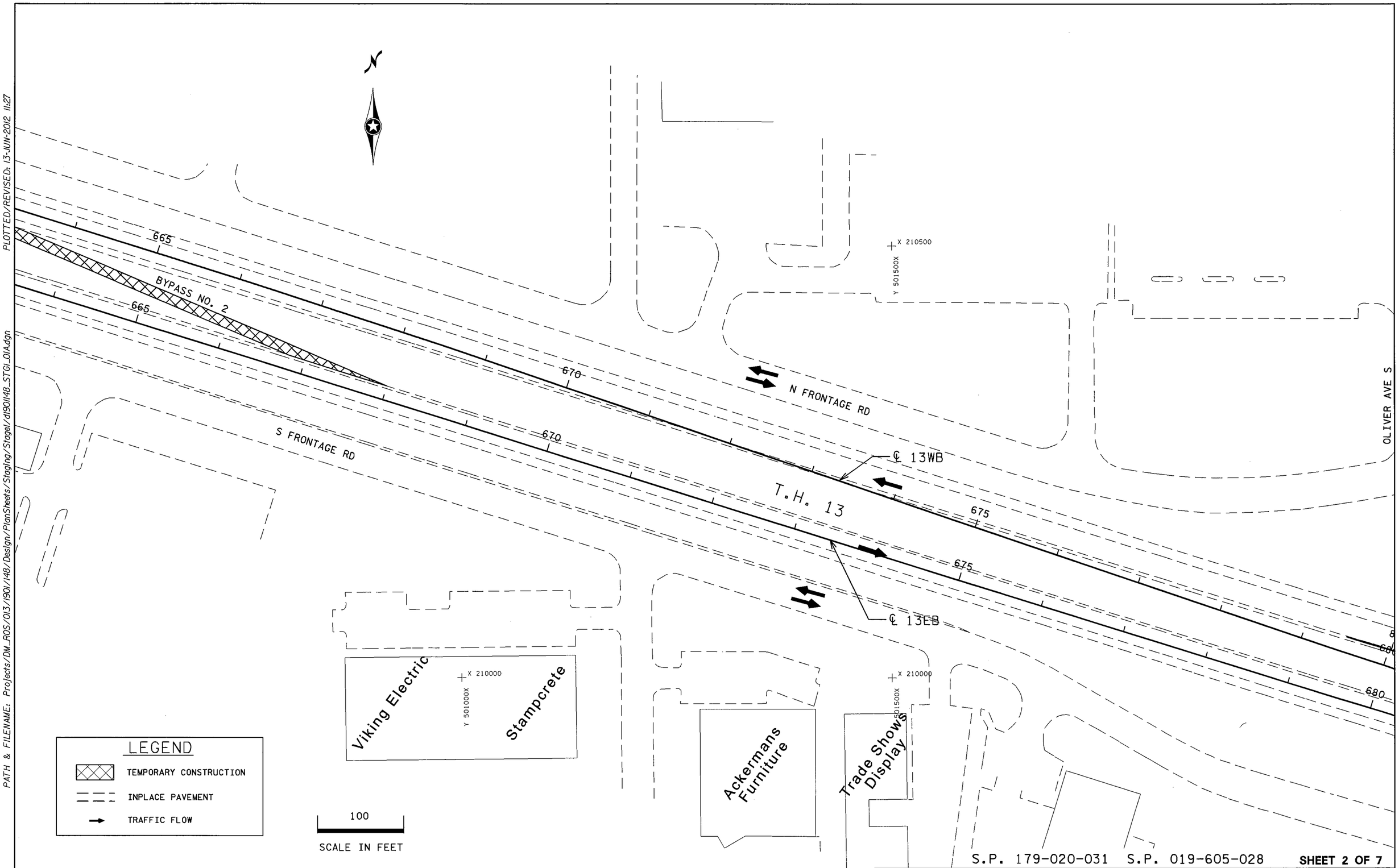

S.P. 179-020-031 S.P. 019-605-028 **SHEET 2 OF 7**

STAGING PLANS - STAGE 1

DRAWN BY: GLJ	CHECKED BY: HS	CERTIFIED BY [signature] LICENSED PROFESSIONAL ENGINEER	LIC. NO. 18520 DATE 6/18/12	STATE PROJ. NO. 1901-148 (T.H. 13)	SHEET NO. 134 OF 442 SHEETS

PLOTTED/REVISED: 13-JUN-2012 11:27

DISTRICT #: METRO
IPLOT NAME: d1901148_STG1_01A
PATH & FILENAME: Projects/DM_ROS/013/1901/148/Design/PlanSheets/Staging/Stage1/d1901148_STG1_01A.dgn

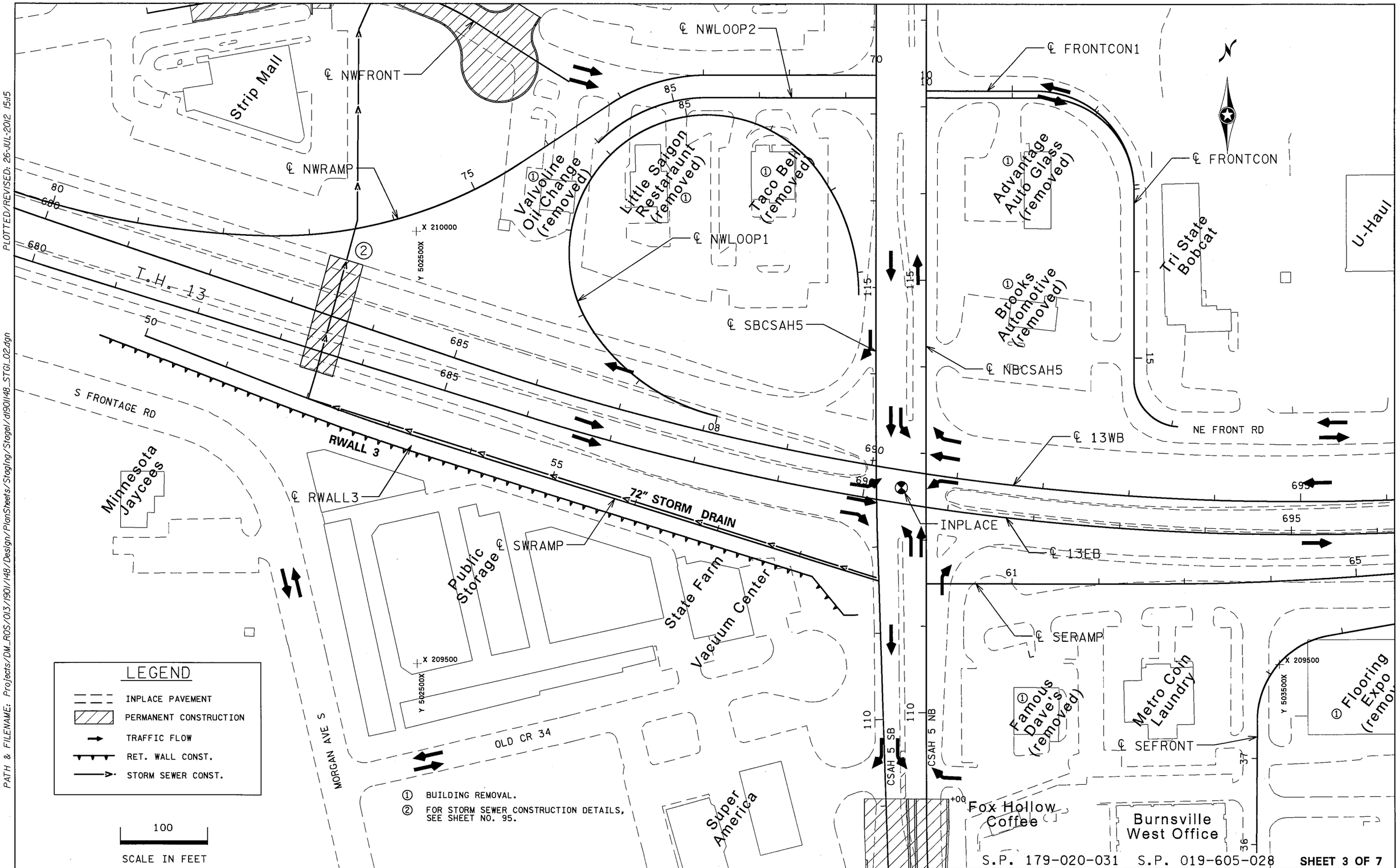

DISTRICT #: METRO
IPLOT NAME: d1901148_STGI_02
PATH & FILENAME: Projects/DM_ROS/013/1901/148/Design/PlanSheets/Staging/Stage1/d1901148_STGI_02.dgn
PLOTTED/REVISED: 26-JUL-2012 15:15

STAGING PLANS – STAGE 1

DRAWN BY: GLJ	CHECKED BY: HS	CERTIFIED BY _____ LICENSED PROFESSIONAL ENGINEER	LIC. NO. 18520 DATE 7/26/12	STATE PROJ. NO. 1901-148 (T.H. 13)	SHEET NO. 135 OF 442 SHEETS

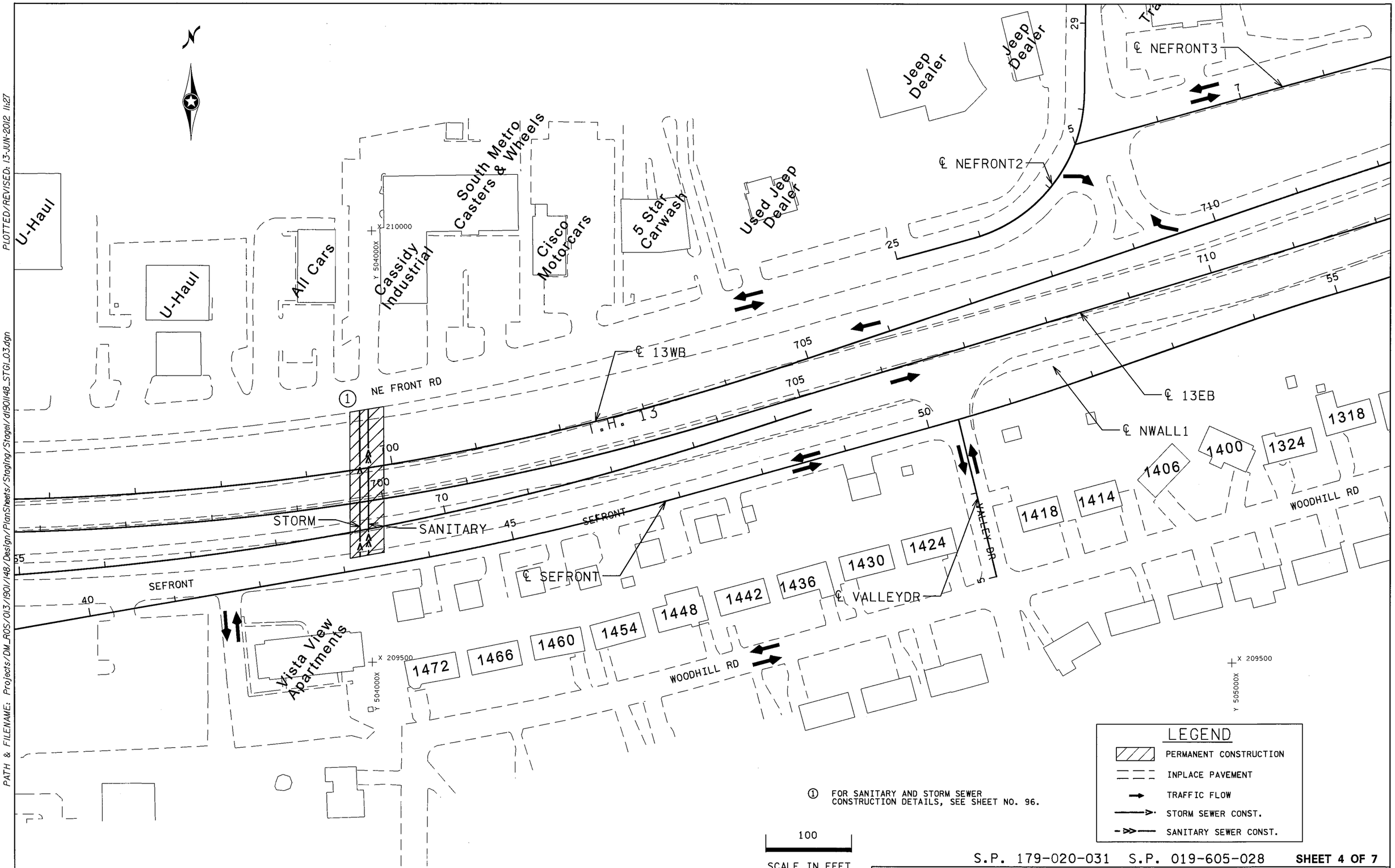

① FOR SANITARY AND STORM SEWER CONSTRUCTION DETAILS, SEE SHEET NO. 96.

S.P. 179-020-031 S.P. 019-605-028 **SHEET 4 OF 7**

STAGING PLANS - STAGE 1

DRAWN BY: GLJ	CHECKED BY: HS	CERTIFIED BY [signature] LICENSED PROFESSIONAL ENGINEER	LIC. NO. 18520 DATE 6/18/12	STATE PROJ. NO. 1901-148 (T.H. 13)	SHEET NO. 136 OF 442 SHEETS

PLOTTED/REVISED: 13-JUN-2012 11:27

DISTRICT #: METRO
IPLOT NAME: d1901148_STGI_03
PATH & FILENAME: Projects/DM_ROS/013/1901/148/Design/PlanSheets/Staging/Stage1/d1901148_STGI_03.dgn

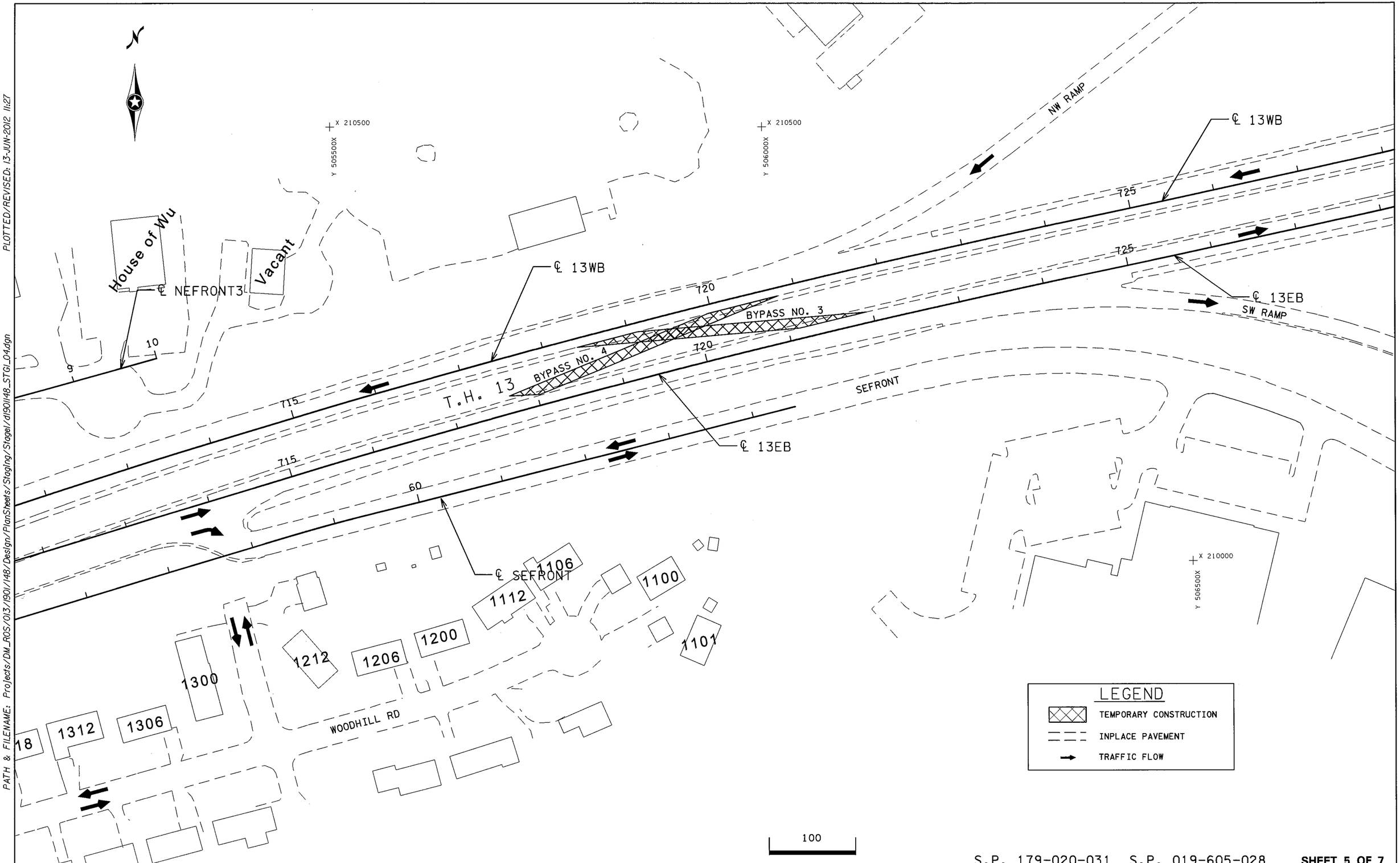

PLOTTED/REVISED: 13-JUN-2012 11:27

DISTRICT #: METRO
IPLOT NAME: d190ll48_STGI_04
PATH & FILENAME: Projects/DM_ROS/013/190l/148/Design/PlanSheets/Staging/Stage1/d190ll48_STGI_04.dgn

S.P. 179-020-031 S.P. 019-605-028 **SHEET 5 OF 7**

STAGING PLANS – STAGE 1

DRAWN BY: GLJ	CHECKED BY: HS	CERTIFIED BY LICENSED PROFESSIONAL ENGINEER LIC. NO. 18520 DATE 6/18/12	STATE PROJ. NO. 1901-148 (T.H. 13) SHEET NO. 137 OF 442 SHEETS

DISTRICT #: METRO
IPLOT NAME: d1901148_STGI_05
PATH & FILENAME: Projects/DM_ROS/013/1901/148/Design/PlanSheets/Staging/Stage1/d1901148_STGI_05.dgn
PLOTTED/REVISED: 13-JUN-2012 11:27

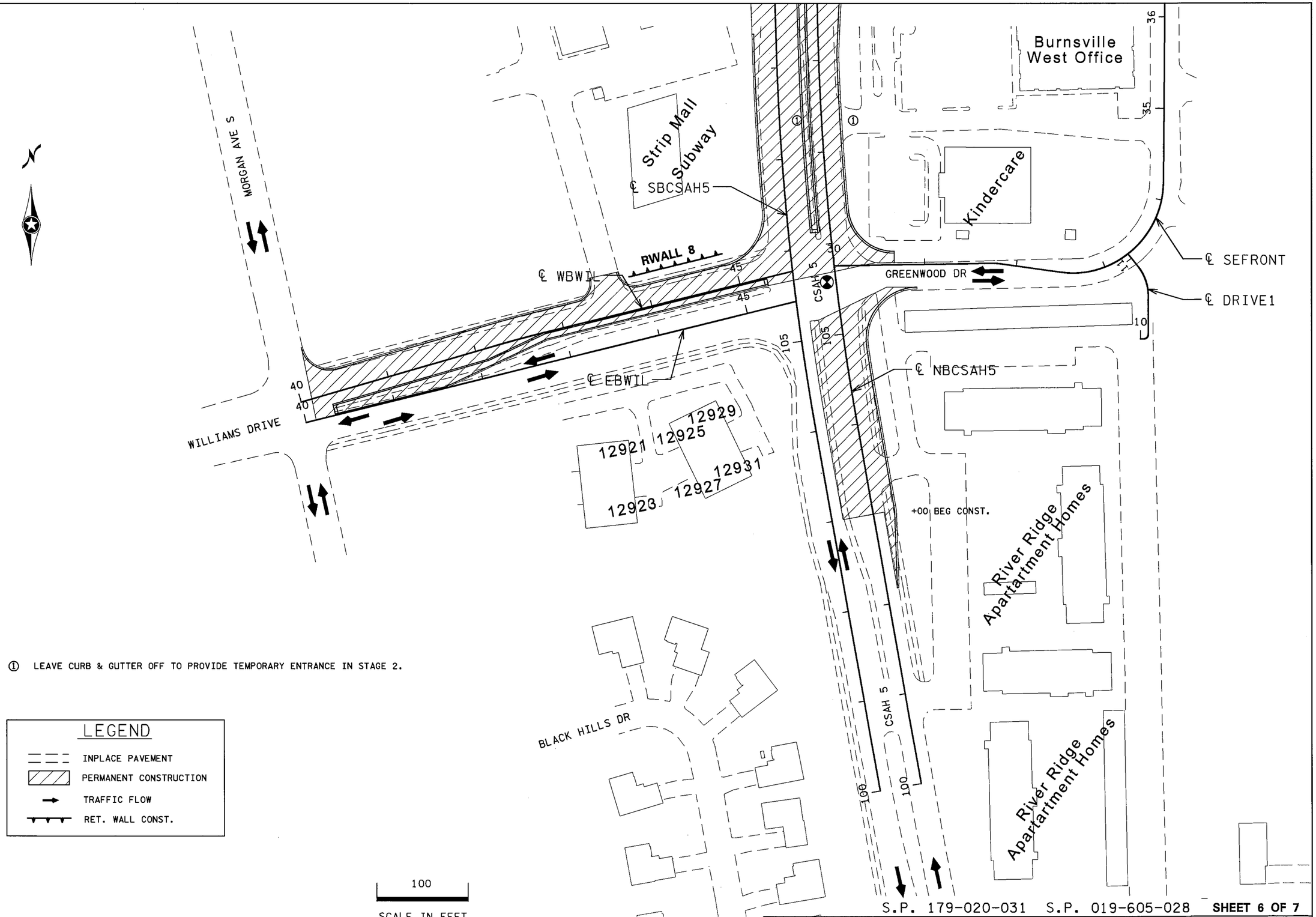

① LEAVE CURB & GUTTER OFF TO PROVIDE TEMPORARY ENTRANCE IN STAGE 2.

LEGEND

- INPLACE PAVEMENT
- PERMANENT CONSTRUCTION
- TRAFFIC FLOW
- RET. WALL CONST.

S.P. 179-020-031 S.P. 019-605-028 **SHEET 6 OF 7**

STAGING PLANS – STAGE 1

DRAWN BY: GLJ	CHECKED BY: HS	CERTIFIED BY _____ LICENSED PROFESSIONAL ENGINEER	LIC. NO. 18520 DATE 6/18/12	STATE PROJ. NO. 1901-148 (T.H. 13)	SHEET NO. 138 OF 442 SHEETS

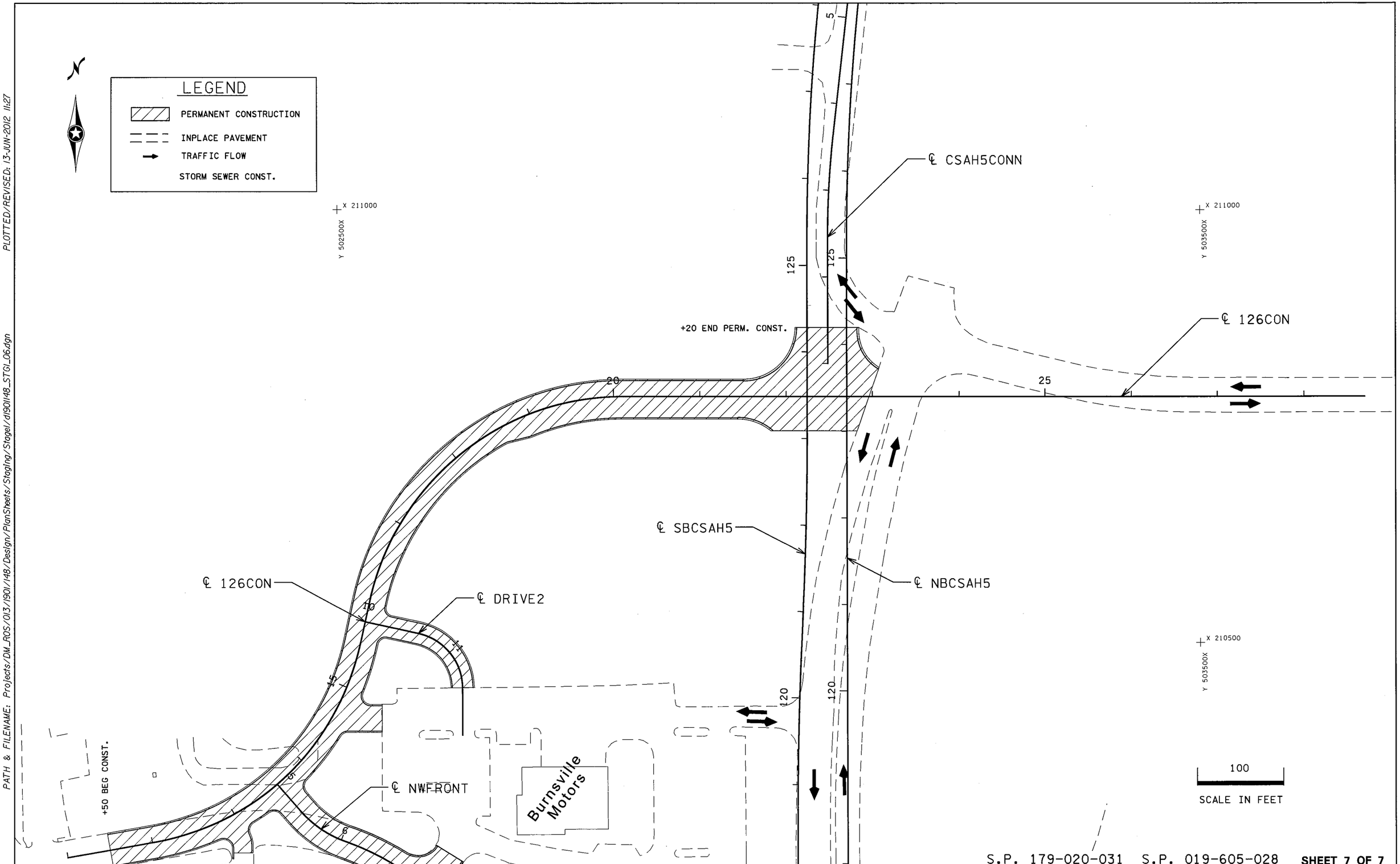

S.P. 179-020-031 S.P. 019-605-028 **SHEET 7 OF 7**

STAGING PLANS - STAGE 1

DRAWN BY: GLJ	CHECKED BY: HS	CERTIFIED BY [signature] LICENSED PROFESSIONAL ENGINEER	LIC. NO. 18520 DATE 6/18/12	STATE PROJ. NO. 1901-148 (T.H. 13) SHEET NO. 139 OF 442 SHEETS

PLOTTED/REVISED: 13-JUN-2012 11:27

DISTRICT #: METRO
IPLOT NAME: d1901148_STGI_06
PATH & FILENAME: Projects/DM_ROS/013/1901/148/Design/PlanSheets/Staging/Stage1/d1901148_STGI_06.dgn

STAGE 2 TRAFFIC

1. SBCSAH5, SOUTH OF WILLIAMS DR., USES WILLIAMS DR. W.B. AND NBCSAH5 TO GET FROM MORGAN AVE.
2. CSAH5 TO PROVIDE ACCESS TO THE BURNSVILLE WEST OFFICES PARKING LOT AT APPROX. STA. 107+30.
3. CLOSE GREENWOOD DR. TO STA. 38+50.
4. CLOSE 126TH ST. FROM CSAH5 TO THE EAST.
5. ALL OTHER ROADWAYS TO REMAIN OPEN AS IN STAGE 1.

STAGE 2 CONSTRUCTION

1. COMPLETE 126CON STA. 11+50 TO 28+50, EASTERLY PORTION UNDER TRAFFIC.
2. COMPLETE CSAH5 CONN NORTH OF 126TH CONNECTION, UNDER TRAFFIC.
3. COMPLETE BOTH ENTRANCES TO BURNSVILLE MOTORS.
4. CONSTRUCT SBCSAH5 STA. 103+00 TO 105+50.
5. CONSTRUCT THE E.B. PORTION OF WILLIAMS DR. STA. 40+11 TO 45+50.
6. CONSTRUCT THE S.E. FRONTAGE RD. STA. 30+50 TO 38+50, PORTIONS UNDER TRAFFIC.
7. CONSTRUCT RWALL NO. 9 AND DRIVE1.
8. CONTINUE THE CONSTRUCTION OF THE PROPOSED SANITARY AND STORM SEWER LINES NORTHERLY OF APPROXIMATE STA. 700+00. FOR DETAILS SEE SHEET NO. 96.
9. CONSTRUCT BYPASS NO. 9, T.H. 13 INPLACE MEDIAN STA. 695+00 TO 705+00.

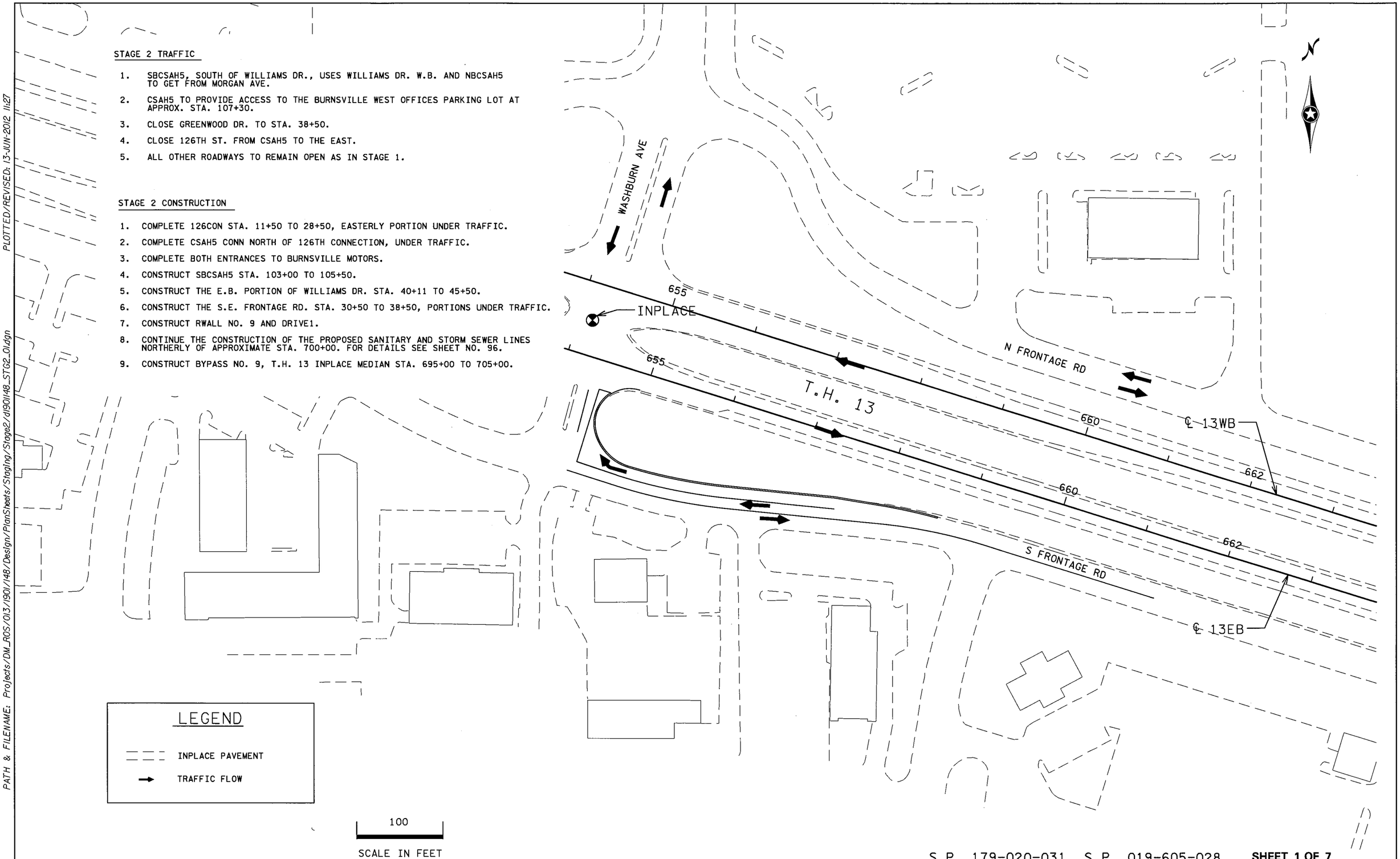

S.P. 179-020-031 S.P. 019-605-028 **SHEET 1 OF 7**

STAGING PLANS - STAGE 2

DRAWN BY: GLJ	CHECKED BY: HS	CERTIFIED BY LICENSED PROFESSIONAL ENGINEER LIC. NO. 18520 DATE 6/18/12	STATE PROJ. NO. 1901-148 (T.H. 13) SHEET NO. 140 OF 442 SHEETS

PLOTTED/REVISED: 13-JUN-2012 11:27
DISTRICT *: METRO
IPLOT NAME: d1901148_STG2_01
PATH & FILENAME: Projects/DM_ROS/013/1901/148/Design/PlanSheets/Staging/Stage2/d1901148_STG2_01.dgn

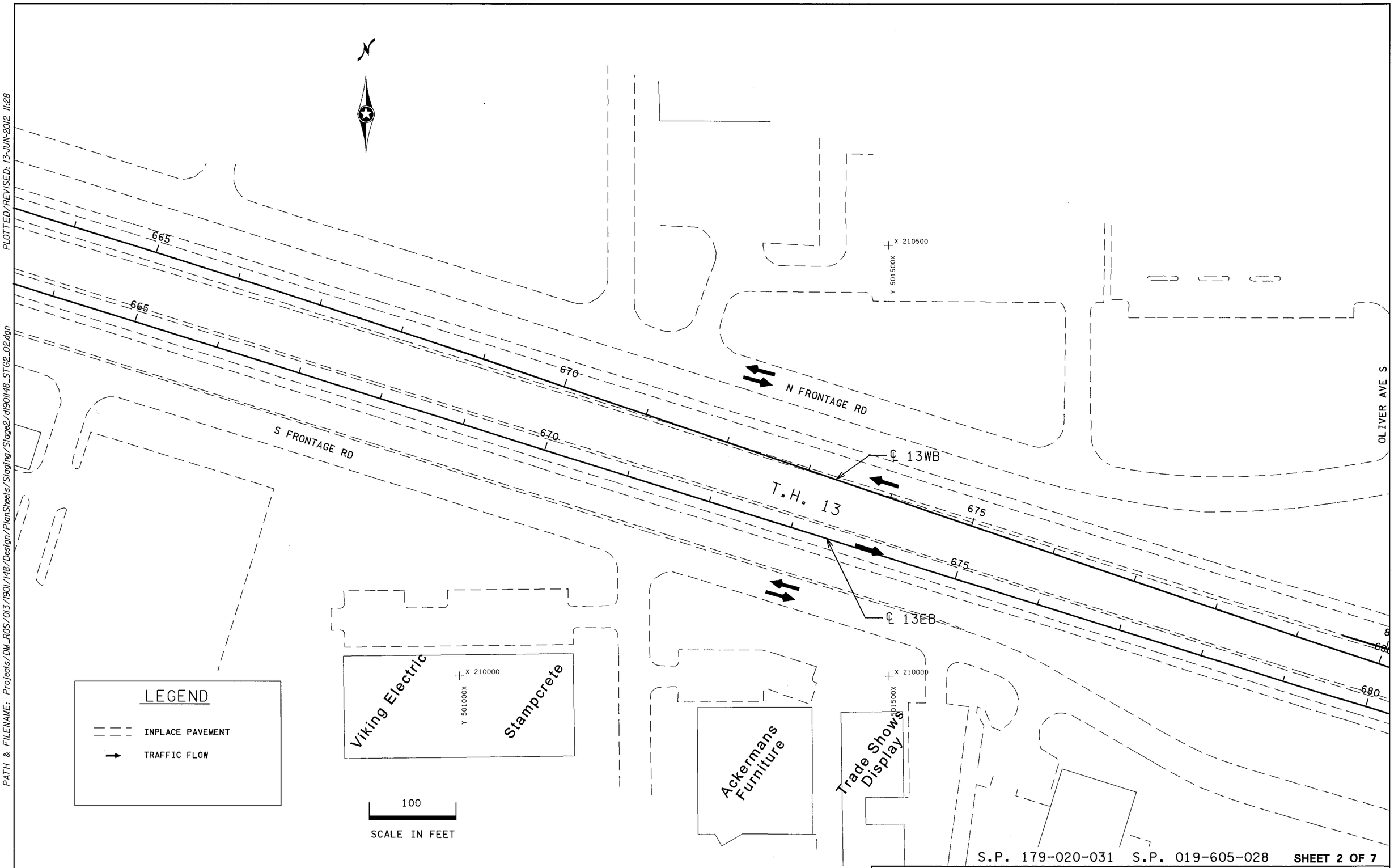

S.P. 179-020-031 S.P. 019-605-028 **SHEET 2 OF 7**

STAGING PLANS - STAGE 2

DRAWN BY: GLJ	CHECKED BY: HS	CERTIFIED BY LICENSED PROFESSIONAL ENGINEER	LIC. NO. 18520 DATE 6/18/12	STATE PROJ. NO. 1901-148 (T.H. 13)	SHEET NO. 141 OF 442 SHEETS

DISTRICT #: METRO
IPLOT NAME: d1901148_STG2_02
PATH & FILENAME: Projects/DM_ROS/013/1901/148/Design/PlanSheets/Staging/Stage2/d1901148_STG2_02.dgn
PLOTTED/REVISED: 13-JUN-2012 11:28

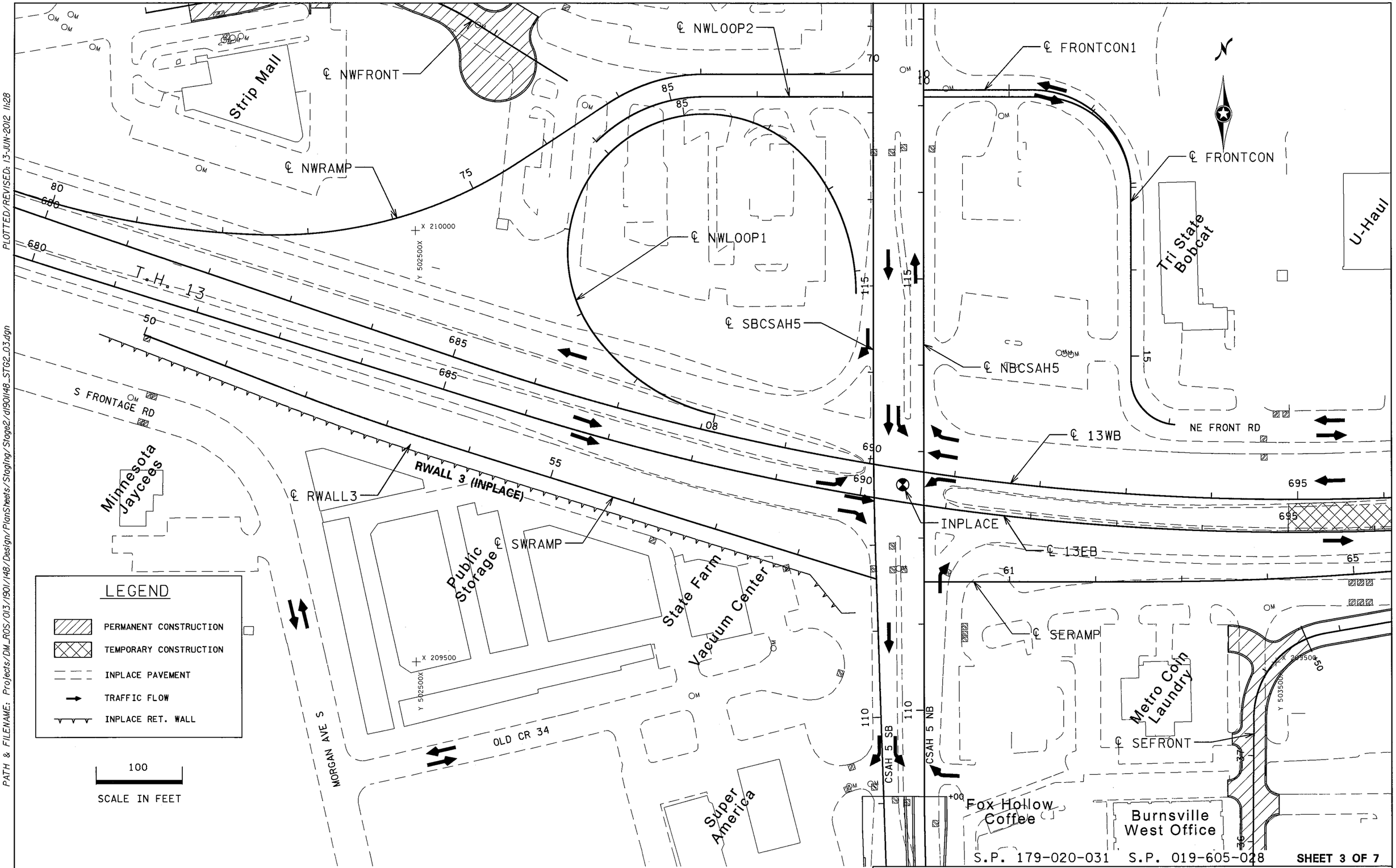

S.P. 179-020-031 S.P. 019-605-028

SHEET 3 OF 7

STAGING PLANS – STAGE 2

DRAWN BY: GLJ	CHECKED BY: HS	CERTIFIED BY _____ LICENSED PROFESSIONAL ENGINEER	LIC. NO. 18520 DATE 6/18/12	STATE PROJ. NO. 1901-148 (T.H. 13)	SHEET NO. 142 OF 442 SHEETS

DISTRICT #: METRO
IPLOT NAME: d1901148_STG2_03
PATH & FILENAME: Projects/DM_ROS/013/1901/148/Design/PlanSheets/Staging/Stage2/d1901148_STG2_03.dgn
PLOTTED/REVISED: 13-JUN-2012 11:28

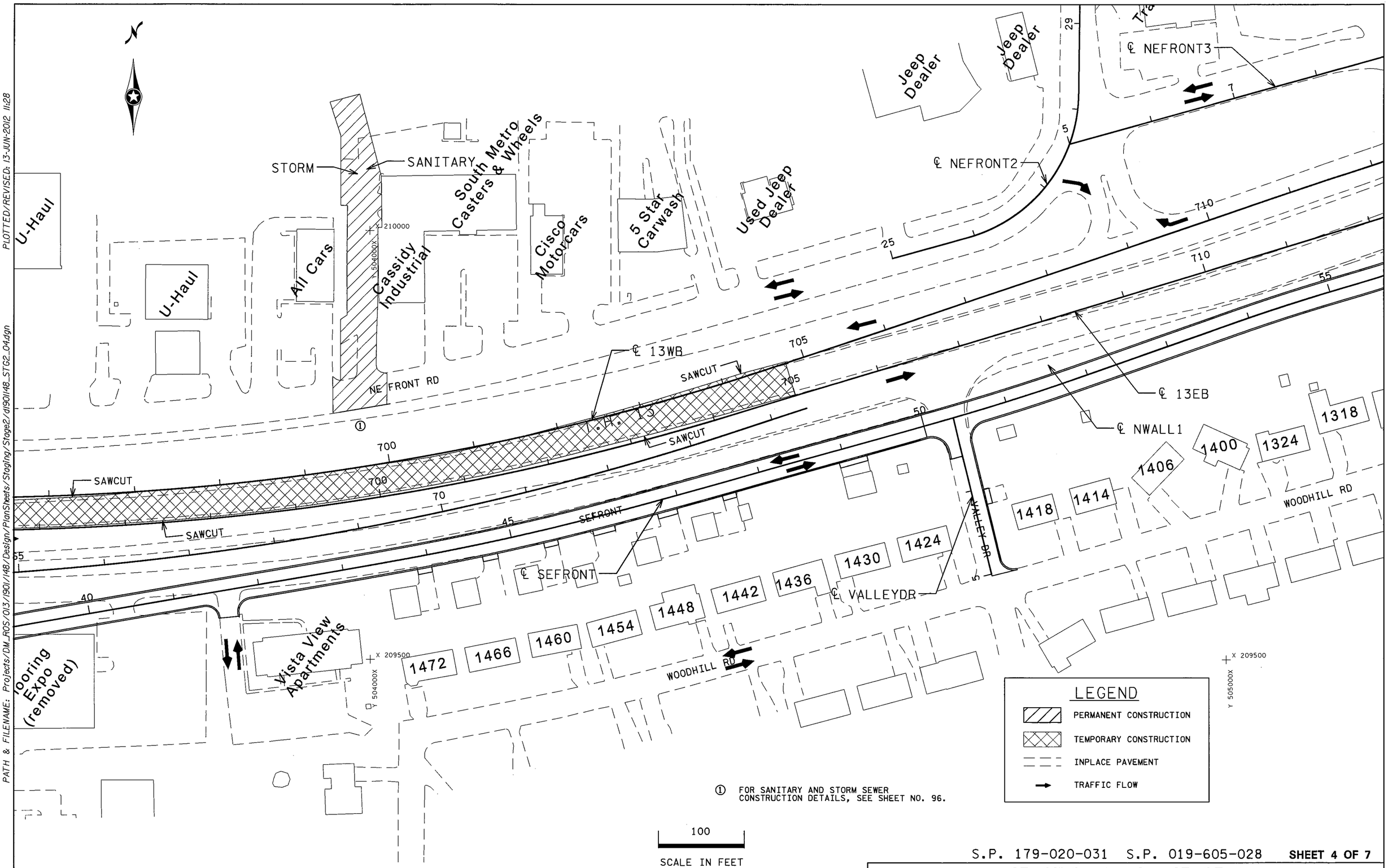

① FOR SANITARY AND STORM SEWER CONSTRUCTION DETAILS, SEE SHEET NO. 96.

S.P. 179-020-031 S.P. 019-605-028 **SHEET 4 OF 7**

STAGING PLANS – STAGE 2

DRAWN BY: GLJ	CHECKED BY: HS	CERTIFIED BY _____ LICENSED PROFESSIONAL ENGINEER LIC. NO. 18520 DATE 6/18/12	STATE PROJ. NO. 1901-148 (T.H. 13) SHEET NO. 143 OF 442 SHEETS

DISTRICT #: METRO
IPLOT NAME: d190148_STG2_04
PATH & FILENAME: Projects/DM_ROS/013/1901/148/Design/PlanSheets/Staging/Stage2/d190148_STG2_04.dgn
PLOTTED/REVISED: 13-JUN-2012 11:28

DISTRICT #: METRO
IPLOT NAME: d190l148_STG2_05
PATH & FILENAME: Projects/DM_ROS/013/190l/148/Design/PlanSheets/Staging/Stage2/d190l148_STG2_05.dgn
PLOTTED/REVISED: 13-JUN-2012 11:28

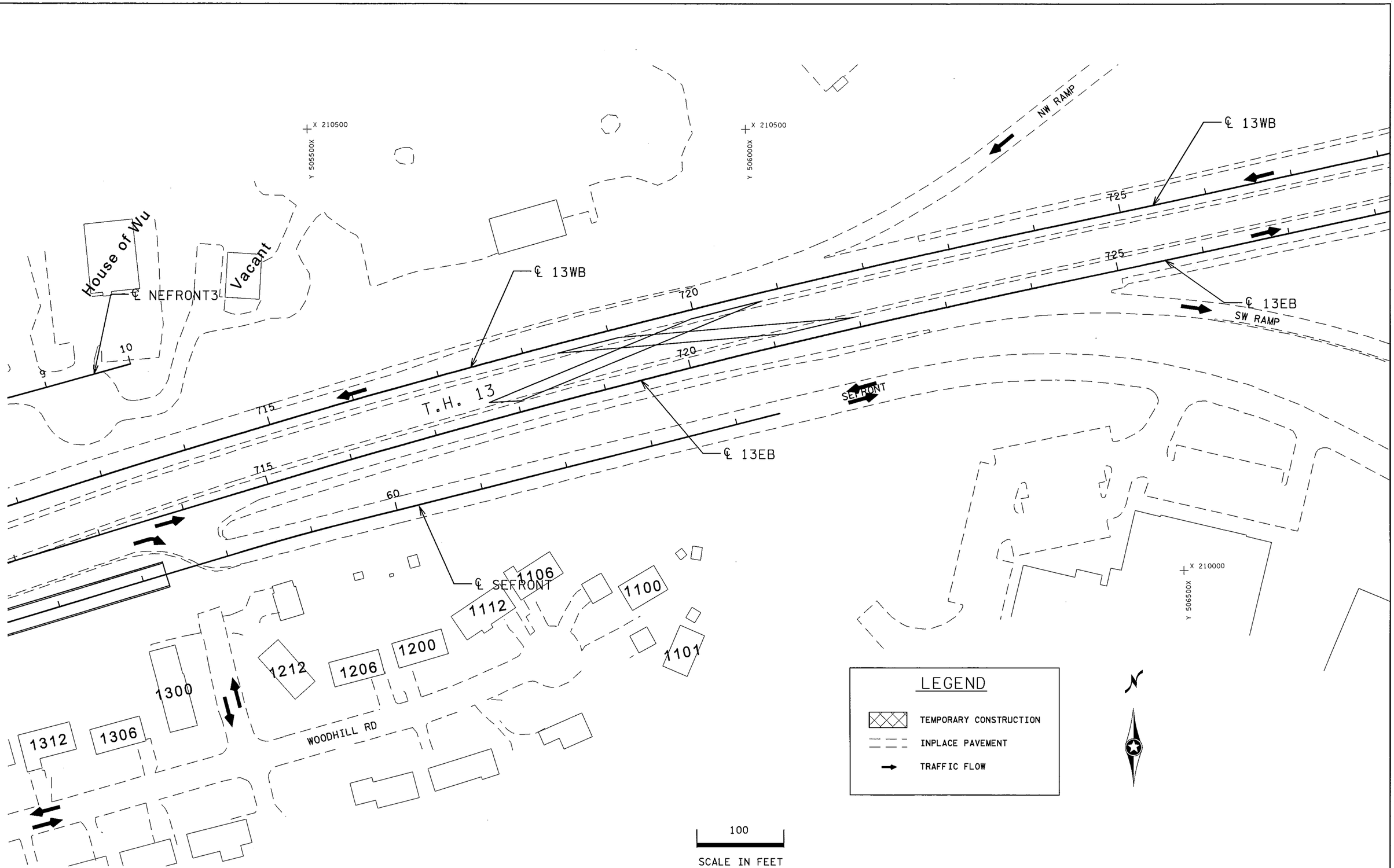

S.P. 179-020-031 S.P. 019-605-028 **SHEET 5 OF 7**

STAGING PLANS – STAGE 2

DRAWN BY: GLJ	CHECKED BY: HS	CERTIFIED BY LICENSED PROFESSIONAL ENGINEER LIC. NO. 20534 DATE 6/18/12	STATE PROJ. NO. 1901-148 (T.H. 13)	SHEET NO. 144 OF 442 SHEETS

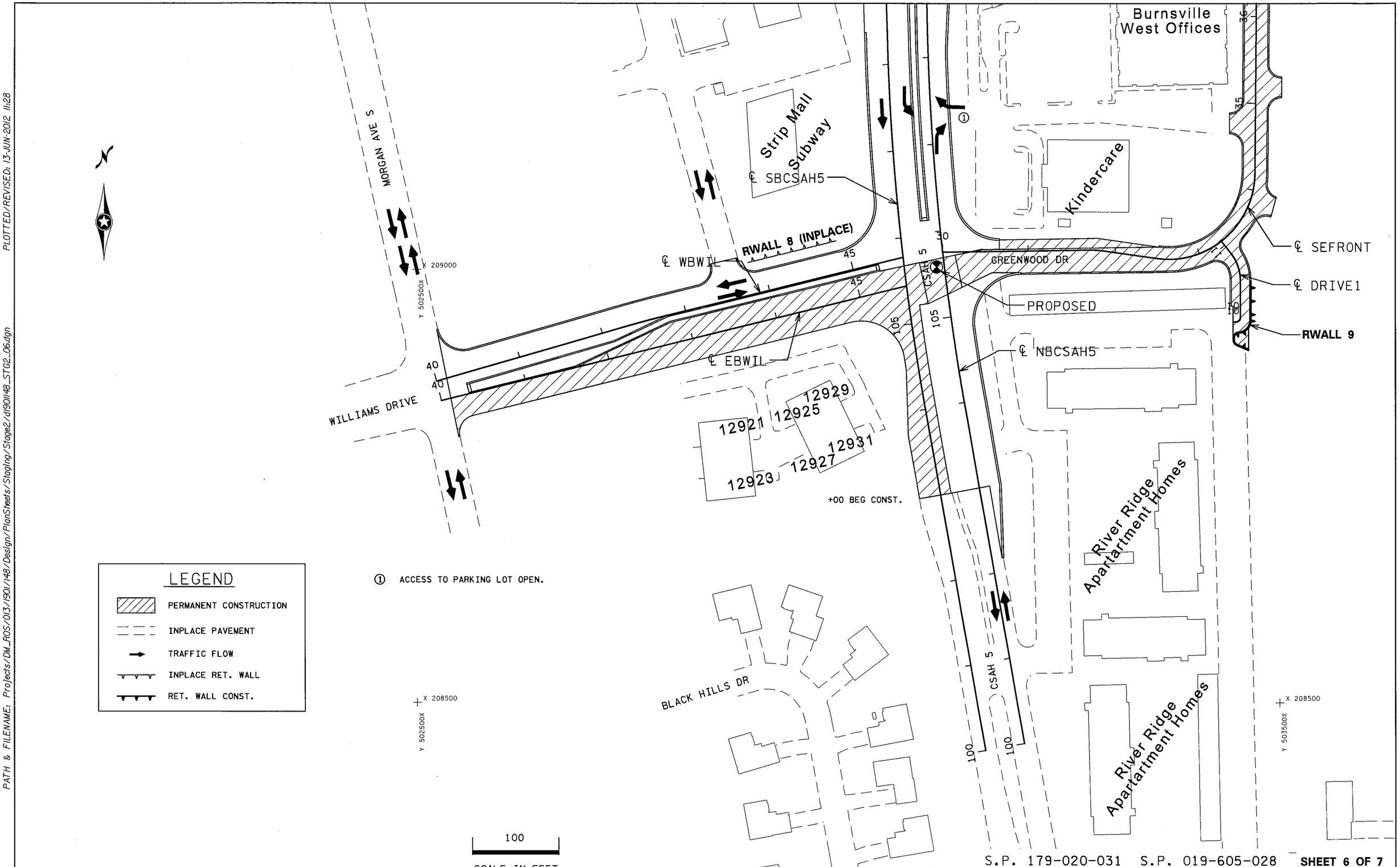

S.P. 179-020-031 S.P. 019-605-028 **SHEET 6 OF 7**

STAGING PLANS – STAGE 2

DRAWN BY: GLJ	CHECKED BY: HS	CERTIFIED BY _____ LICENSED PROFESSIONAL ENGINEER LIC. NO. 18520 DATE 6/18/12	STATE PROJ. NO. 1901-148 (T.H. 13) SHEET NO. 145 OF 442 SHEETS

DISTRICT #: METRO
IPLOT NAME: d190l148_STG2_06
PATH & FILENAME: Projects/DM_ROS/013/190l/148/Design/PlanSheets/Staging/Stage2/d190l148_STG2_06.dgn
PLOTTED/REVISED: 13-JUN-2012 11:28

DISTRICT #: METRO
IPLOT NAME: d1901148_STG2_07
PATH & FILENAME: Projects/DM_ROS/013/1901/148/Design/PlanSheets/Staging/Stage2/d1901148_STG2_07.dgn
PLOTTED/REVISED: 13-JUN-2012 11:28

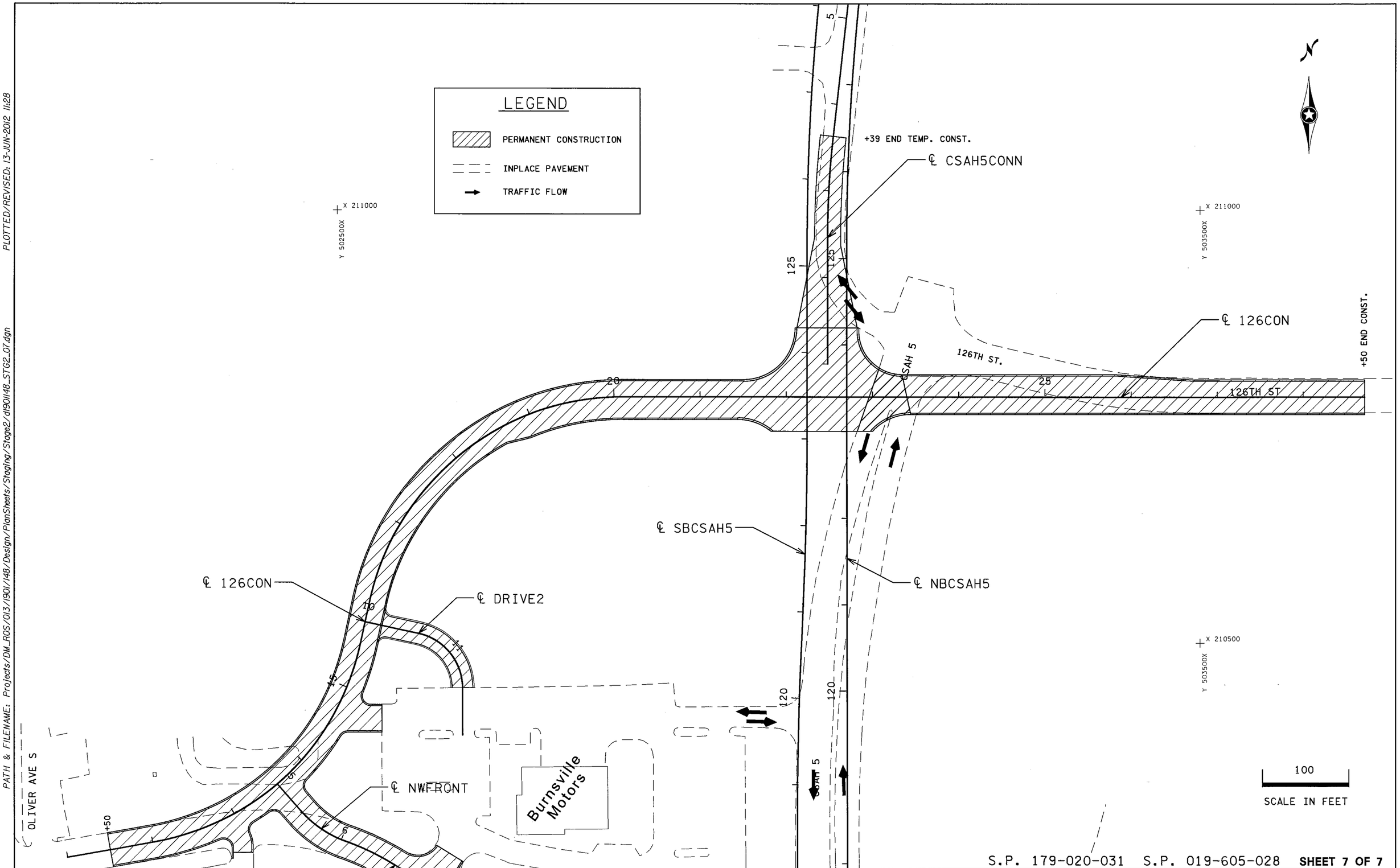

S.P. 179-020-031 S.P. 019-605-028 **SHEET 7 OF 7**

STAGING PLANS – STAGE 2

DRAWN BY: GLJ	CHECKED BY: HS	CERTIFIED BY _____ LICENSED PROFESSIONAL ENGINEER LIC. NO. 18520 DATE 6/18/12	STATE PROJ. NO. 1901-148 (T.H. 13) SHEET NO. 146 OF 442 SHEETS

STAGE 3 TRAFFIC

1. OPEN 126CON FROM STA. 11+50 TO 28+50.
2. OPEN ENTRANCES TO BURNSVILLE MOTORS.
3. OPEN CSAH5 FRON 103+00 TO T.H. 13.
4. OPEN WILLIAMS DR. AND GREENWOOD DR.
5. CLOSE NORTHERLY PORTION OF CSAH 5 AT T.H. 13.
6. CLOSE FRONTCON RD. STA. 10+00 TO N.E. FRONTAGE RD.
7. T.H. 13 W.B. RESTRICTED TO ONE LANE FOR THE RECONSTRUCTION OF THE T.H.13 W.B. SHOULDER.
8. CLOSE THE SEFRONT RD. STA. 38+50 TO 50+00. LOCAL TRAFFIC TO VISTA VIEW OPEN.
9. CLOSE THE T.H. 13 E.B. RIGHT EXIT TO SEFRONT WHEN CONSTRUCTION BEGINS AT THAT LOCATION.
10. T.H.13 E.B. TRAFFIC USES BYPASS 9.
11. ALL OTHER ROADWAYS TO REMAIN OPEN AS IN STAGE 2.

STAGE 3 CONSTRUCTION

1. CONSTRUCT CSAH5 FROM STA. 115+50 TO 126TH CONNECTION.
2. CONSTRUCT FRONTCON STA. 10+00 TO N.E. FRONTAGE RD.
3. CONSTRUCT RWALL NO. 7.
4. CONSTRUCT RWALL NO. 6.
5. BEGIN CONSTRUCT NWRAMP STA. 70+00 TO 77+00.
6. BEGIN CONSTRUCT NWLOOP2 ADJACENT TO NWRAMP.
7. RECONSTRUCT T.H. 13 W.B. OUTSIDE SHOULDER.
8. RELOCATE ALL UTILITIES IN THE SEFRONT RD.
9. CONSTRUCT RWALL NO. 5, WITH NWALL NO. 2 AND NWALL NO. 1.
10. CONSTRUCT SEFRONT STA. 38+50 TO 64+50.
11. CONSTRUCT A TEMPORARY RIGHT-IN TO DUPONT AVE. ADJACENT TO T.H. 13 W.B. (BYPASS NO. 7).
12. CONSTRUCT BYPASS NO. 8.
13. CONSTRUCT MEDIAN CROSS OVER, EAST OF THE T.H. 35W BRIDGE.
14. CONSTRUCT TRAFFIC SIGNAL AT RAMP INTERCHANGE.

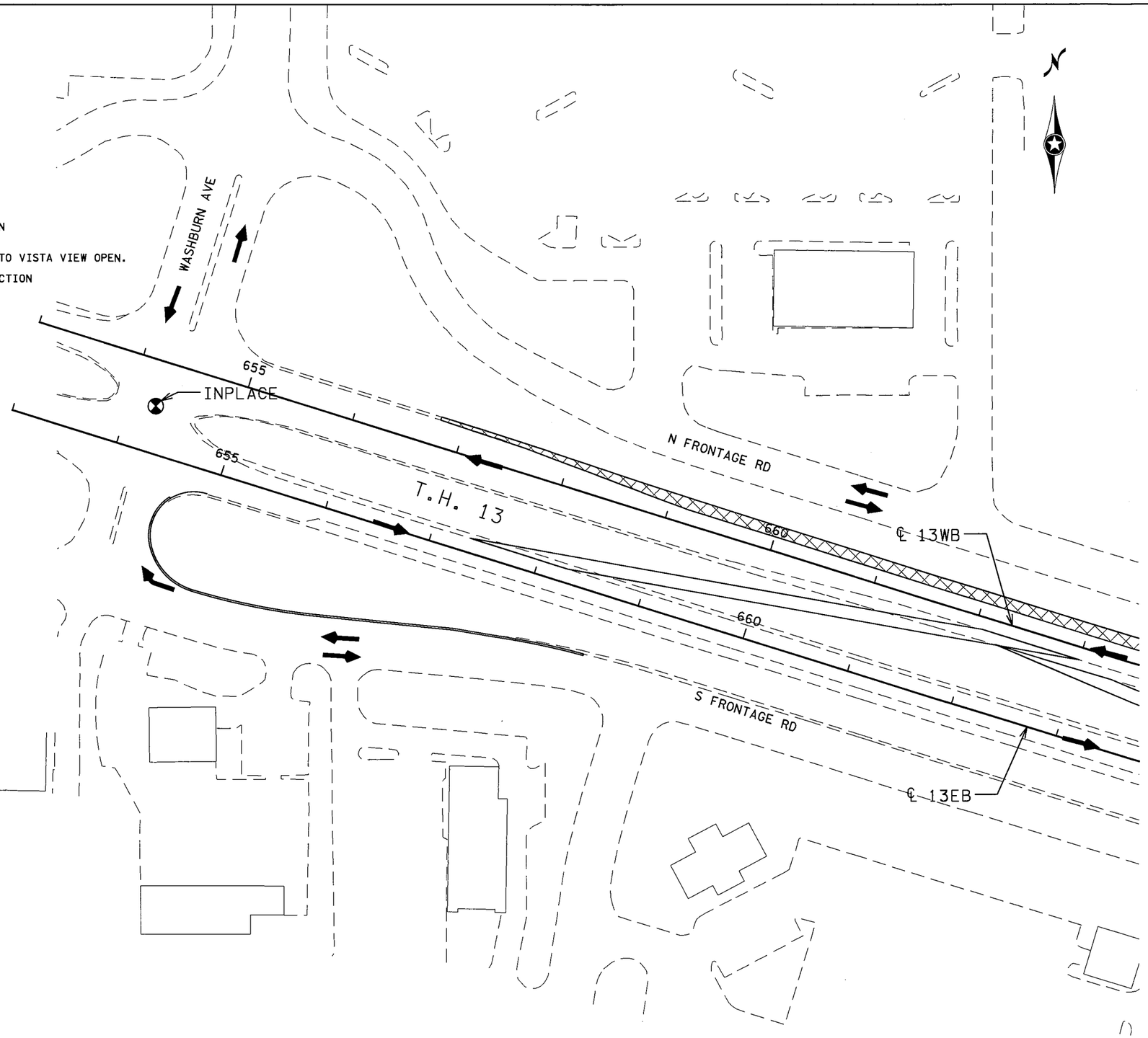

LEGEND

INPLACE PAVEMENT

TRAFFIC FLOW

TEMPORARY CONSTRUCTION

100

SCALE IN FEET

S.P. 179-020-031 S.P. 019-605-028

SHEET 1 OF 8

STAGING PLANS - STAGE 3

DRAWN BY: GLJ	CHECKED BY: HS	CERTIFIED BY _____ LICENSED PROFESSIONAL ENGINEER LIC. NO. 18520 DATE 6/18/12	STATE PROJ. NO. 1901-148 (T.H. 13)	SHEET NO. 147 OF 442 SHEETS

PLOTTED/REVISED: 13-JUN-2012 11:35
DISTRICT : METRO
IPLOT NAME: d1901148_STG3_01
PATH & FILENAME: Projects/DM_ROS/013/1901/148/Design/PlanSheets/Staging/Stage3/d1901148_STG3_01.dgn

PLOTTED/REVISED: 13-JUN-2012 11:35
DISTRICT : METRO
IPLOT NAME: d1901148_STG3_02
PATH & FILENAME: Projects/DM_ROS/013/1901/148/Design/PlanSheets/Staging/Stage3/d1901148_STG3_02.dgn

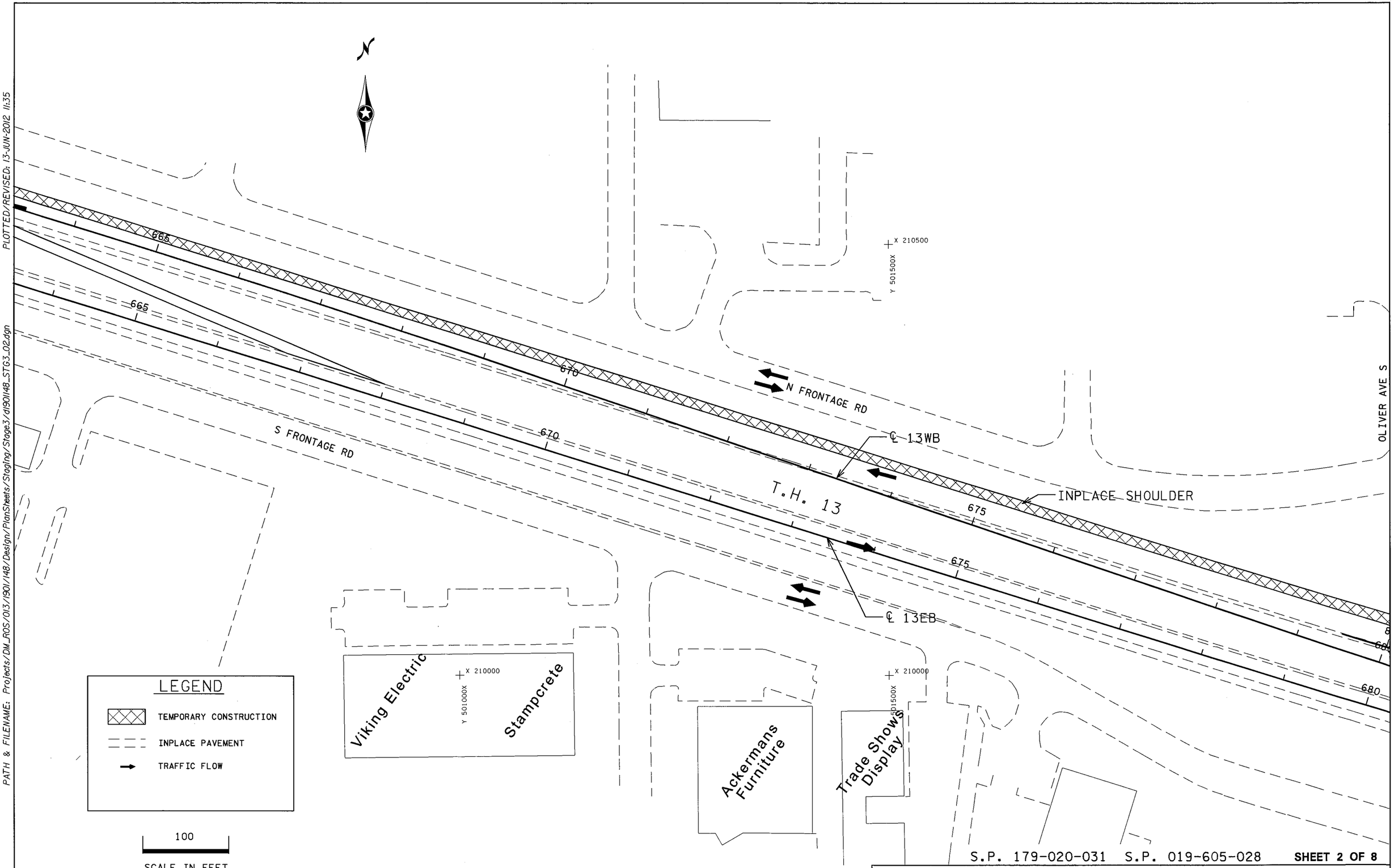

S.P. 179-020-031 S.P. 019-605-028 **SHEET 2 OF 8**

STAGING PLANS - STAGE 3

DRAWN BY: GLJ	CHECKED BY: HS	CERTIFIED BY _____ LICENSED PROFESSIONAL ENGINEER	LIC. NO. 18520 DATE 6/18/12	STATE PROJ. NO. 1901-148 (T.H. 13)	SHEET NO. 148 OF 442 SHEETS

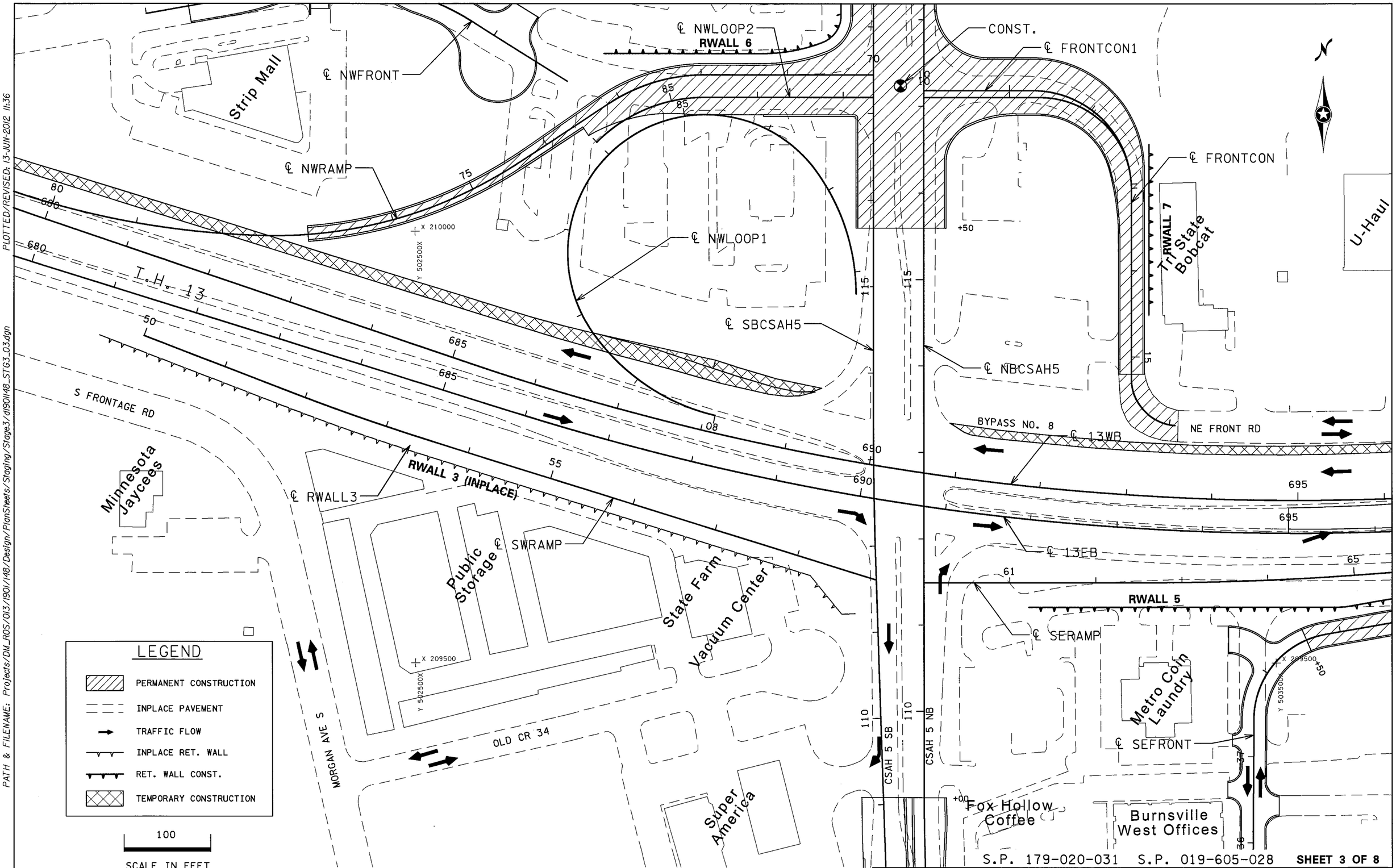

S.P. 179-020-031 S.P. 019-605-028 **SHEET 3 OF 8**

STAGING PLANS – STAGE 3

DRAWN BY: GLJ	CHECKED BY: HS	CERTIFIED BY _____ LICENSED PROFESSIONAL ENGINEER	LIC. NO. 20534 DATE 6/18/12	STATE PROJ. NO. 1901-148 (T.H. 13)	SHEET NO. 149 OF 442 SHEETS

DISTRICT #: METRO
IPLOT NAME: d1901148_STG3_03
PATH & FILENAME: Projects/DM_ROS/013/1901/148/Design/PlanStreets/Staging/Stage3/d1901148_STG3_03.dgn
PLOTTED/REVISED: 13-JUN-2012 11:36

DISTRICT #: METRO
IPLOT NAME: d901148_STG3_04
PATH & FILENAME: Projects/DM_ROS/013/1901/148/Design/PlanSheets/Staging/Stage3/d901148_STG3_04.dgn
PLOTTED/REVISED: 13-JUN-2012 11:36

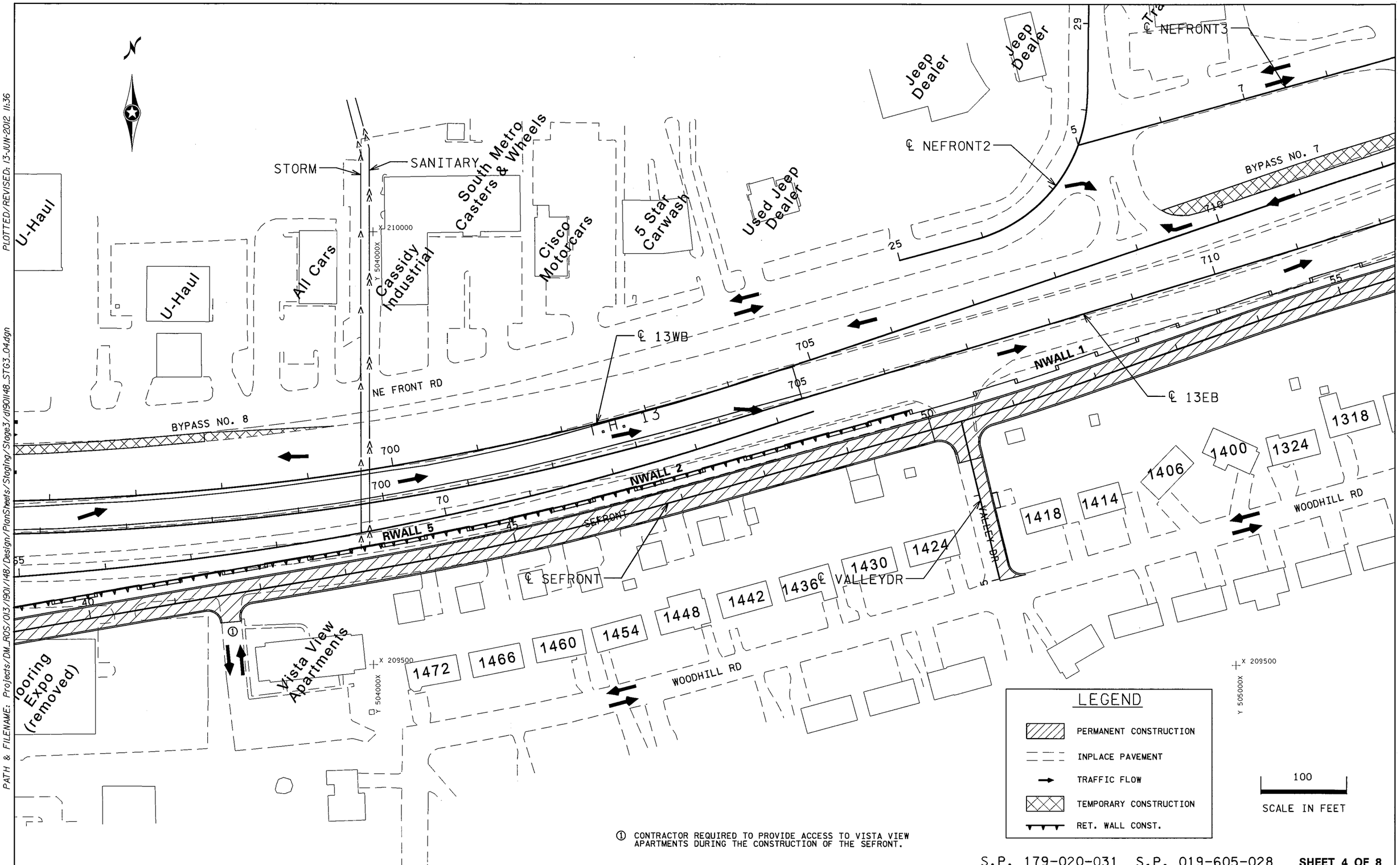

① CONTRACTOR REQUIRED TO PROVIDE ACCESS TO VISTA VIEW APARTMENTS DURING THE CONSTRUCTION OF THE SEFRONT.

S.P. 179-020-031 S.P. 019-605-028 **SHEET 4 OF 8**

STAGING PLANS – STAGE 3

DRAWN BY: GLJ	CHECKED BY: HS	CERTIFIED BY _____ LICENSED PROFESSIONAL ENGINEER LIC. NO. 18520 DATE 6/18/12	STATE PROJ. NO. 1901-148 (T.H. 13)	SHEET NO. 150 OF 442 SHEETS

PLOTTED/REVISED: 13-JUN-2012 11:36
DISTRICT #: METRO
IPLOT NAME: d1901148_STG3_05
PATH & FILENAME: Projects/DM_ROS/013/1901/148/Design/PlanSheets/Staging/Stage3/d1901148_STG3_05.dgn

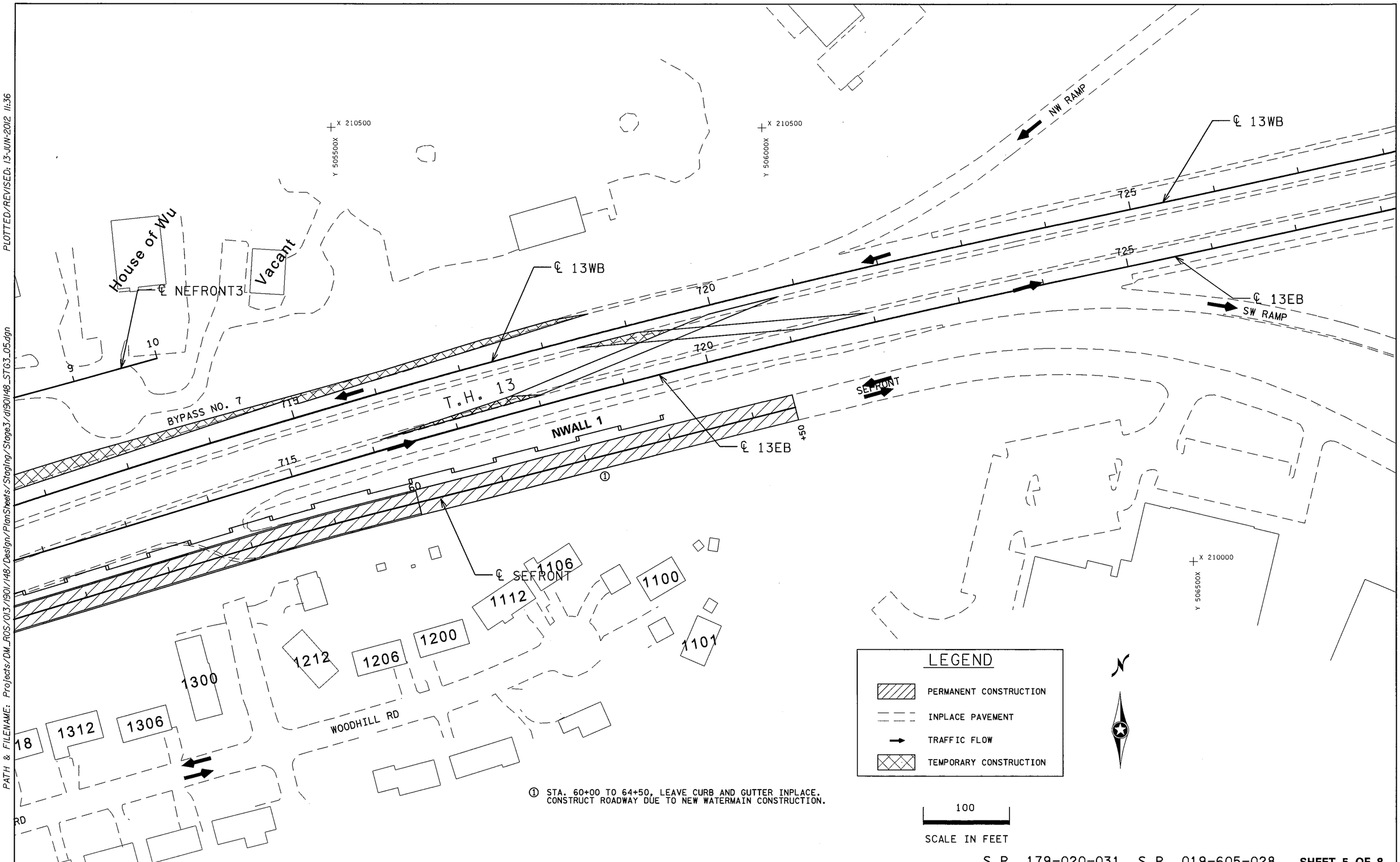

① STA. 60+00 TO 64+50, LEAVE CURB AND GUTTER INPLACE.
CONSTRUCT ROADWAY DUE TO NEW WATERMAIN CONSTRUCTION.

S.P. 179-020-031 S.P. 019-605-028 **SHEET 5 OF 8**

STAGING PLANS – STAGE 3

DRAWN BY: GLJ	CHECKED BY: HS	CERTIFIED BY LICENSED PROFESSIONAL ENGINEER LIC. NO. 18520 DATE 6/18/12	STATE PROJ. NO. 1901-148 (T.H. 13)	SHEET NO. 151 OF 442 SHEETS

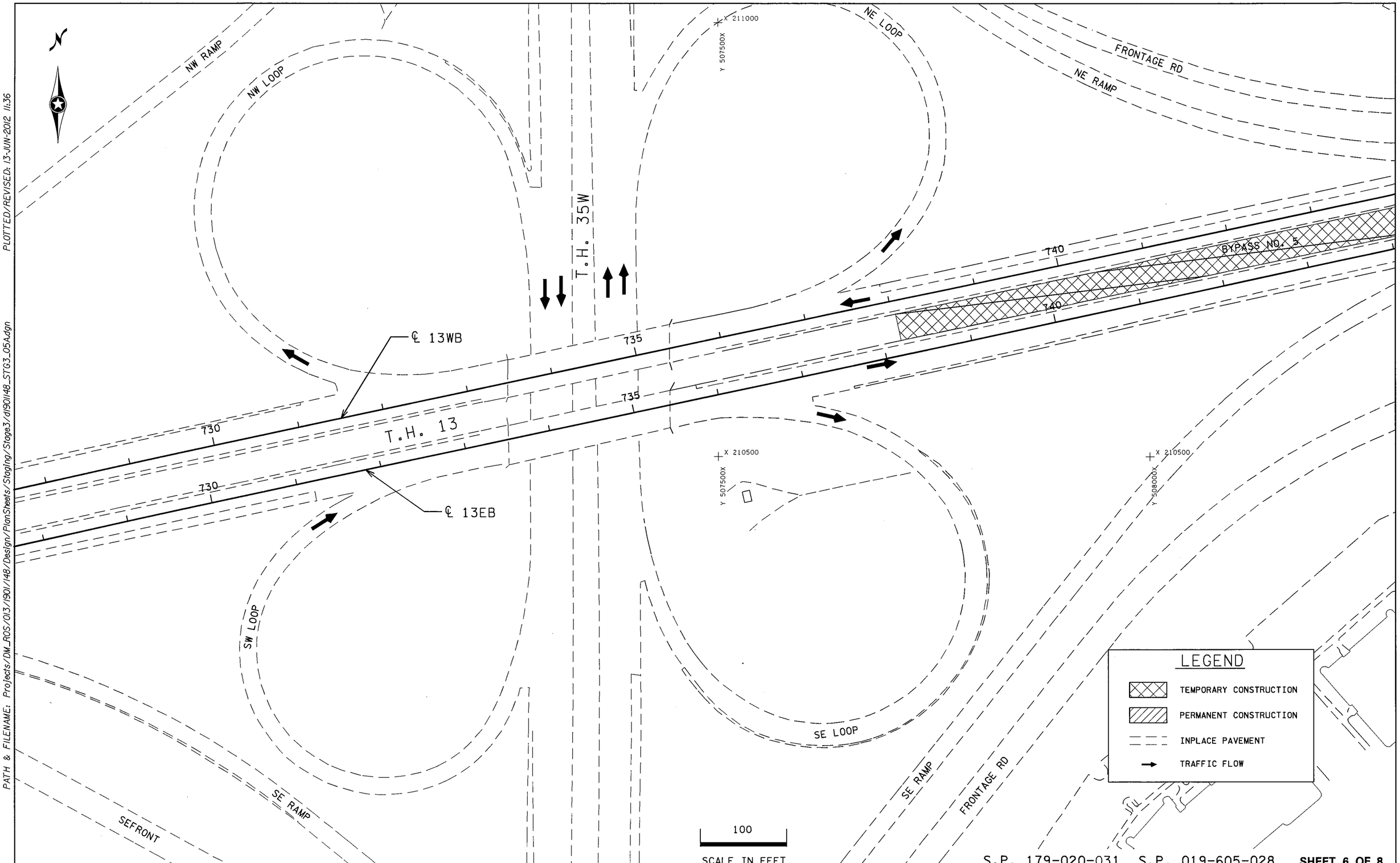

DISTRICT #: METRO
IPLOT NAME: d1901148_STG3_05A
PATH & FILENAME: Projects/DM_ROS/013/1901/148/Design/PlanSheets/Staging/Stage3/d1901148_STG3_05A.dgn
PLOTTED/REVISED: 13-JUN-2012 11:36

S.P. 179-020-031 S.P. 019-605-028 **SHEET 6 OF 8**

STAGING PLANS - STAGE 3

DRAWN BY: GLJ	CHECKED BY: HS	CERTIFIED BY _____ LICENSED PROFESSIONAL ENGINEER LIC. NO. 18520 DATE 6/18/12	STATE PROJ. NO. 1901-148 (T.H. 13)	SHEET NO. 152 OF 442 SHEETS

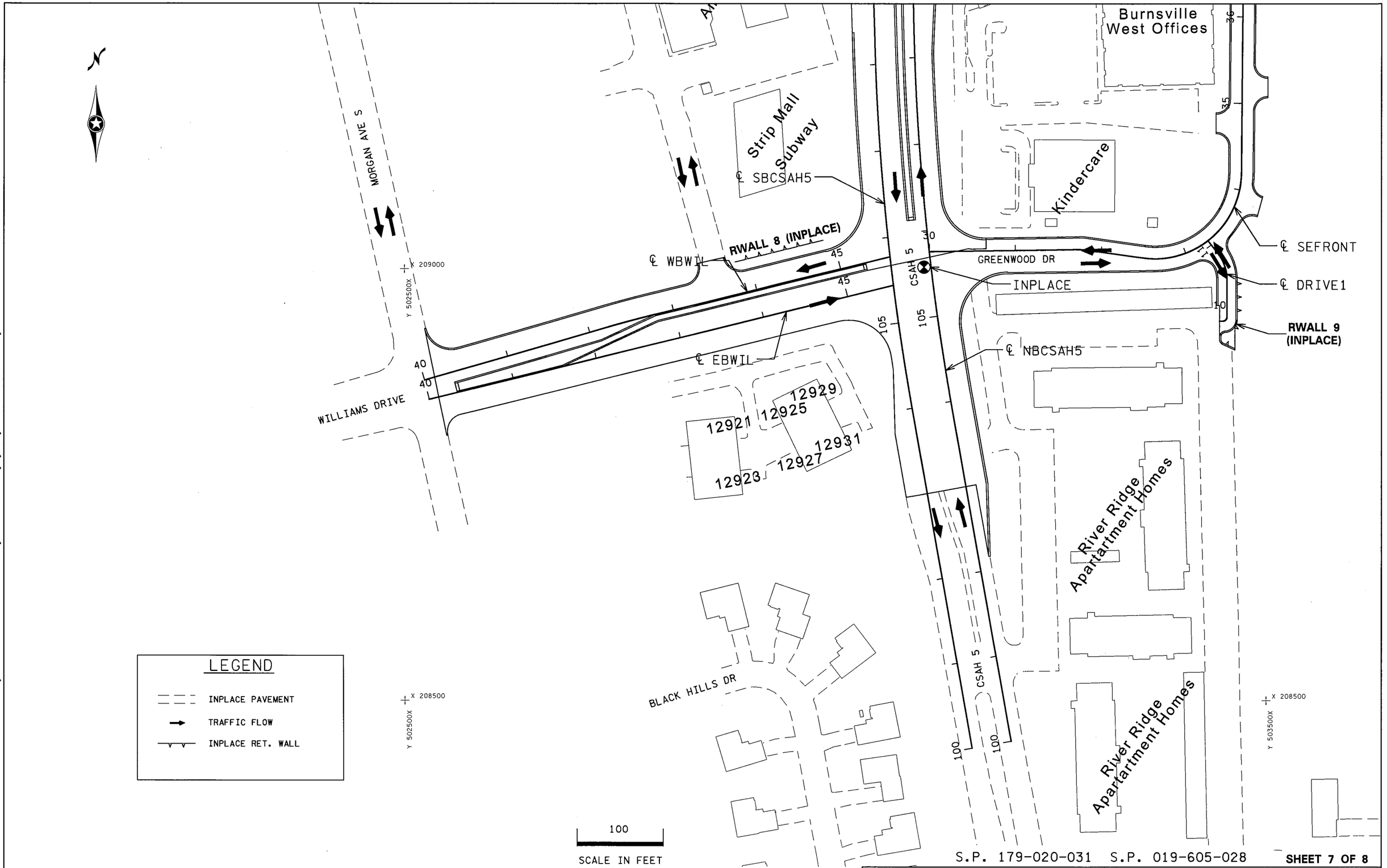

S.P. 179-020-031 S.P. 019-605-028

SHEET 7 OF 8

STAGING PLANS - STAGE 3

DRAWN BY: GLJ	CHECKED BY: HS	CERTIFIED BY [signature] LICENSED PROFESSIONAL ENGINEER	LIC. NO. 18520 DATE 6/18/12	STATE PROJ. NO. 1901-148 (T.H. 13) SHEET NO. 153 OF 442 SHEETS

DISTRICT #: METRO
IPLOT NAME: d1901148_STG3_06
PATH & FILENAME: Projects/DM_ROS/013/1901/148/Design/PlanSheets/Staging/Stage3/d1901148_STG3_06.dgn
PLOTTED/REVISED: 13-JUN-2012 11:36

DISTRICT #: METRO
IPLOT NAME: d1901148_STG3_07
PATH & FILENAME: Projects/DM_ROS/013/1901/148/Design/PlanSheets/Staging/Stage3/d1901148_STG3_07.dgn
PLOTTED/REVISED: 13-JUN-2012 11:36

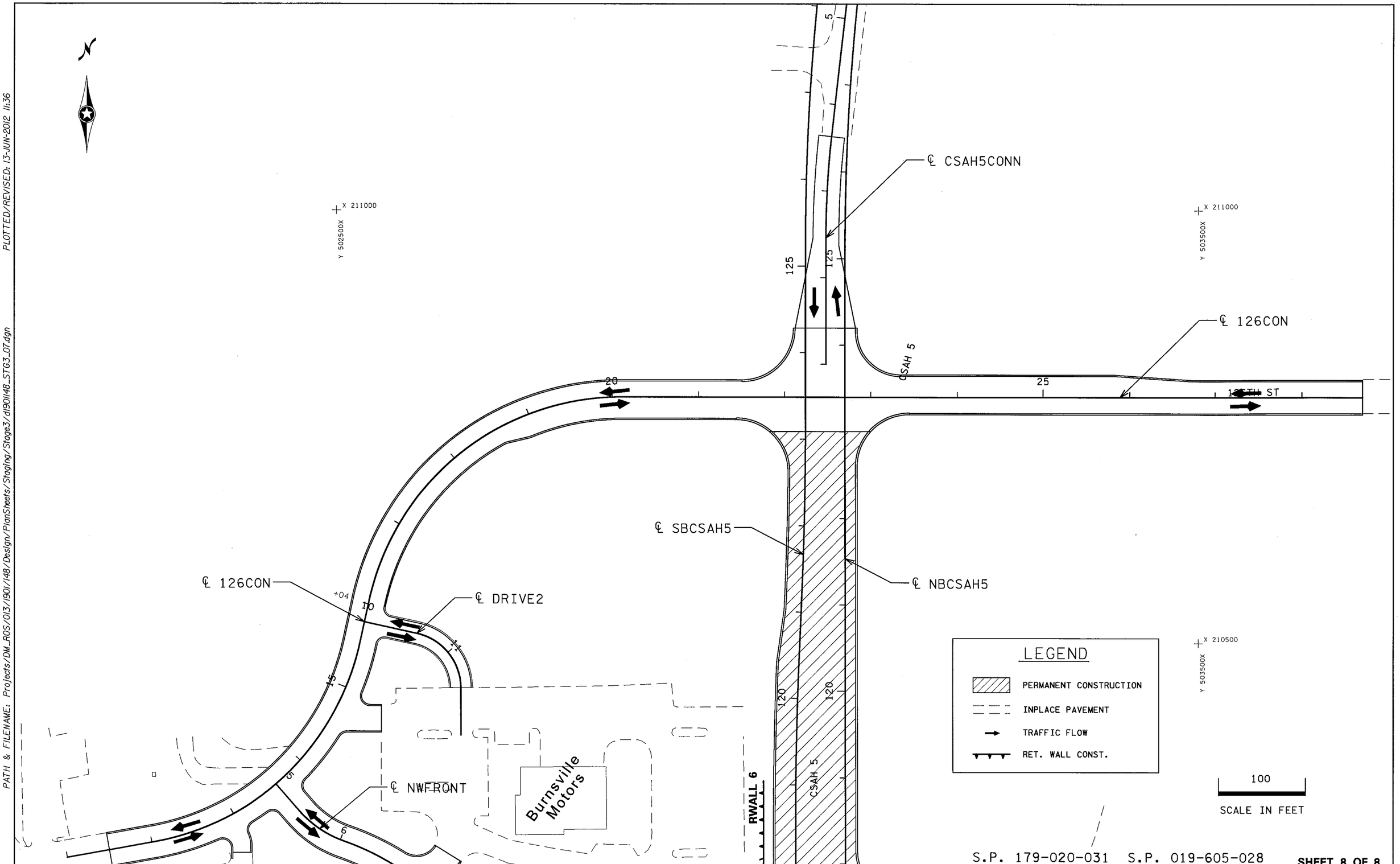

S.P. 179-020-031 S.P. 019-605-028

SHEET 8 OF 8

STAGING PLANS – STAGE 3

DRAWN BY: GLJ	CHECKED BY: HS	CERTIFIED BY LICENSED PROFESSIONAL ENGINEER	LIC. NO. 18520 DATE 6/18/12	STATE PROJ. NO. 1901-148 (T.H. 13)	SHEET NO. 154 OF 442 SHEETS

STAGE 4 TRAFFIC

1. SWITCH ALL OF THE T.H. 13 TRAFFIC TO THE W.B. ROADWAY VIA THE MEDIAN CROSS-OVERS. ONE LANE IN EACH DIRECTION.
2. CLOSE CSAH5 FROM WILLIAMS DR. TO T.H. 13.
3. REMOVE INPLACE TRAFFIC SIGNAL AT T.H. 13 AND CSAH5.
4. T.H. 13 TRAFFIC TO SBCSAH5 TO USE S FRONTAGE RD. FROM WASHBURN AVE. TO MORGAN AVE, TO WILLIAMS DR.
5. T.H. 13 TRAFFIC TO NBCSAH5 TO USE N FRONTAGE RD. FROM WASHBURN AVE. AND 126TH CONNECTION TO CSAH5.
6. OPEN BYPASS NO. 7 ADJACENT TO T.H. 13 W.B. TO DUPONT AVE.
7. CSAH5 NORTH OF T.H. 13 TO RAMP INTERSECTION IS CLOSED.
8. OPEN SEFRONT STA. 38+50 TO 64+50.
9. OPEN CSAH5 FROM 126CON TO RAMP INTERSECTION.
10. CLOSE DUPONT AVE. ENTRANCE TO T.H. 13 W.B.
11. ALL OTHER ROADWAYS TO REMAIN OPEN AS IN STAGE 3.

STAGE 4 CONSTRUCTION

1. CONSTRUCT THE SOUTHERLY HALF OF NEW BRIDGE NO. 19036.
2. CONSTRUCT GRADING AND DRAINAGE ON T.H. 13 E.B STA. 670+00 TO 717+44.
3. CONSTRUCT THE SWRAMP ALONG WITH RWALL NO. 2.
4. CONSTRUCT THE SERAMP ALONG WITH RWALL NO. 4.
5. COMPLETE CONSTRUCTION OF CSAH5 STA. 109+00 TO BRIDGE NO. 19036.
6. CONSTRUCT TRAFFIC SIGNAL AT SOUTH RAMP.

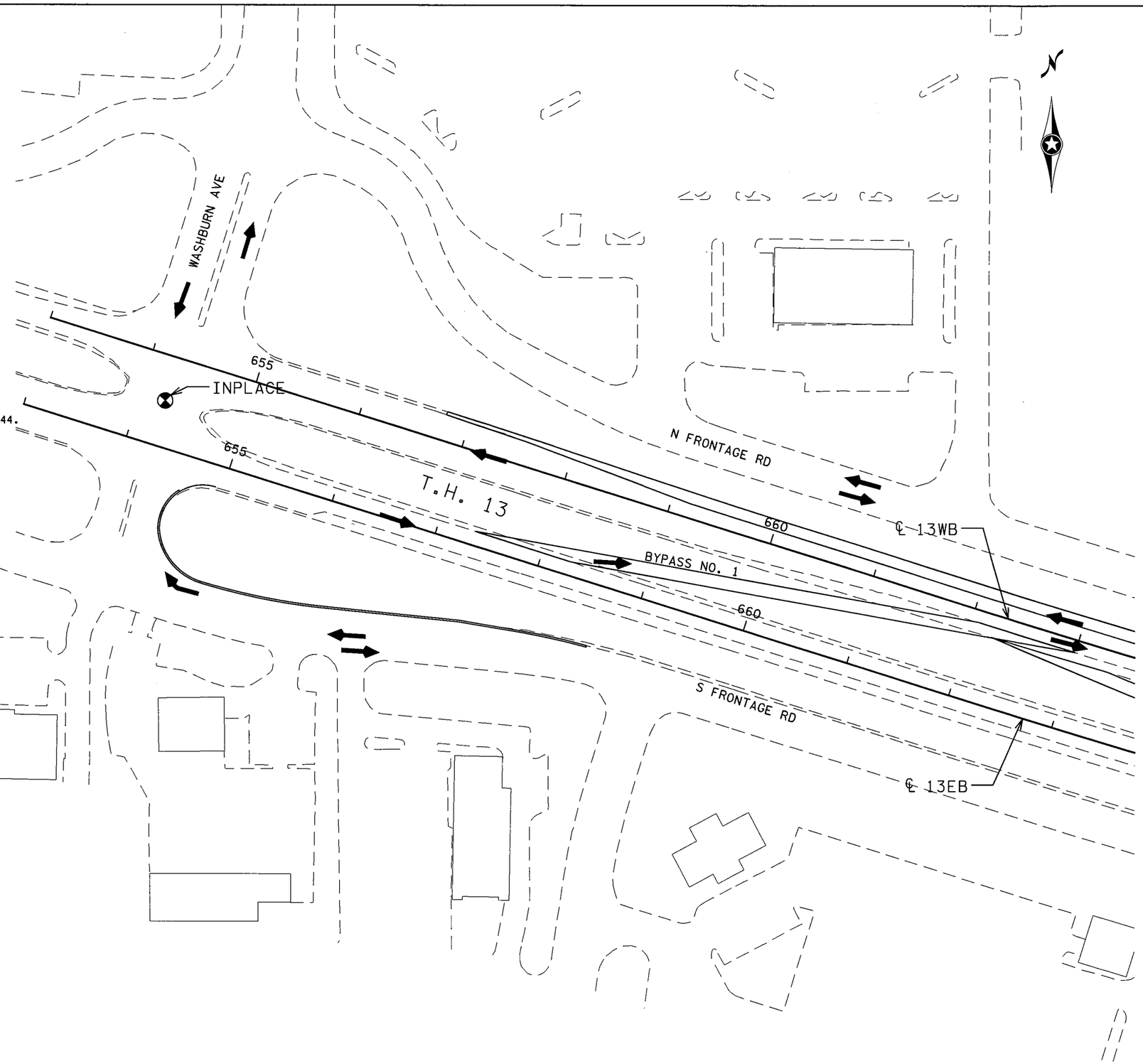

LEGEND

INPLACE PAVEMENT

TRAFFIC FLOW

100

SCALE IN FEET

S.P. 179-020-031 S.P. 019-605-028 **SHEET 1 OF 7**

STAGING PLANS – STAGE 4

DRAWN BY: GLJ	CHECKED BY: HS	CERTIFIED BY LICENSED PROFESSIONAL ENGINEER LIC. NO. 18520 DATE 6/18/12	STATE PROJ. NO. 1901-148 (T.H. 13) SHEET NO. 155 OF 442 SHEETS

DISTRICT #: METRO
IPLOT NAME: d1901148_STG4_01
PATH & FILENAME: Projects/DM_ROS/013/1901/148/Design/PlanSheets/Staging/Stage4/d1901148_STG4_01.dgn
PLOTTED/REVISED: 13-JUN-2012 11:36

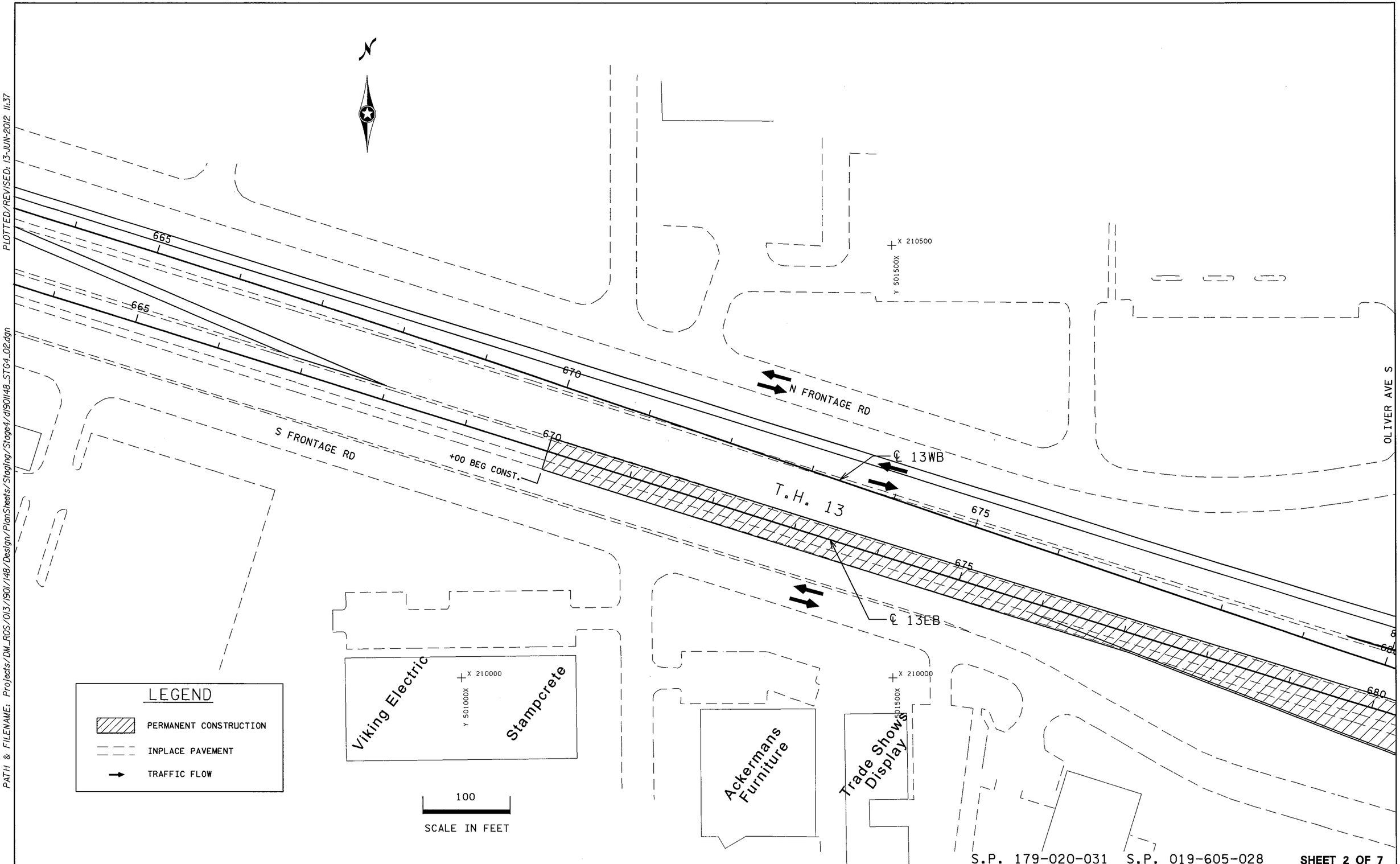

S.P. 179-020-031 S.P. 019-605-028

SHEET 2 OF 7

STAGING PLANS - STAGE 4

DRAWN BY: GLJ	CHECKED BY: HS	CERTIFIED BY LICENSED PROFESSIONAL ENGINEER	LIC. NO. 18520 DATE 6/18/12	STATE PROJ. NO. 1901-148 (T.H. 13)	SHEET NO. 156 OF 442 SHEETS

PLOTTED/REVISED: 13-JUN-2012 11:37

DISTRICT #: METRO
IPLOT NAME: d1901148_STG4_02
PATH & FILENAME: Projects/DM_ROS/013/1901/148/Design/PlanSheets/Staging/Stage4/d1901148_STG4_02.dgn

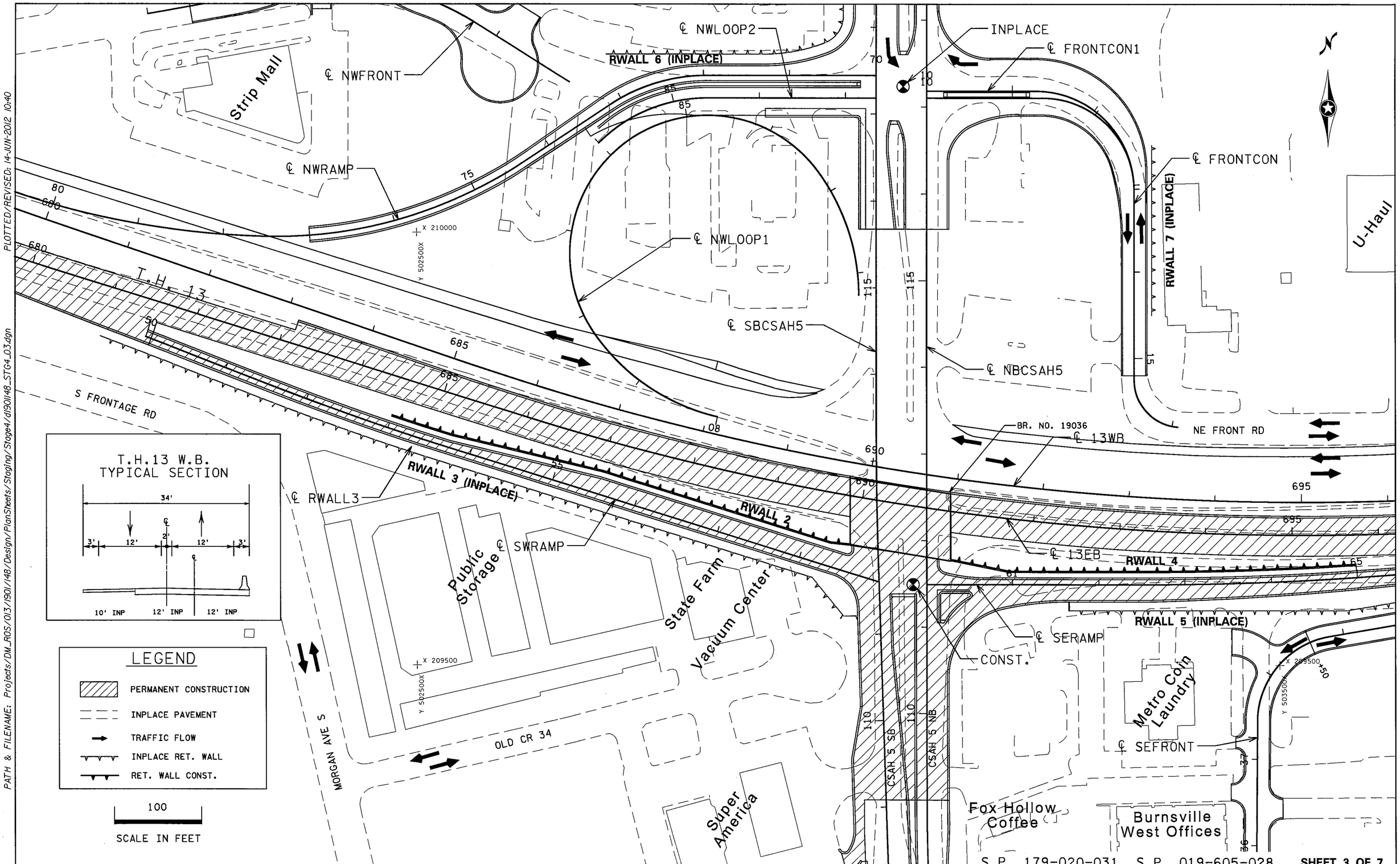

PLOTTED/REVISED: 14-JUN-2012 10:40

DISTRICT #: METRO
IPLOT NAME: d1901148_STG4_03
PATH & FILENAME: Projects/DM_ROS/013/1901/148/Design/PlanSheets/Staging/Stage4/d1901148_STG4_03.dgn

STAGING PLANS – STAGE 4

DRAWN BY: GLJ	CHECKED BY: HS	CERTIFIED BY [signature] LICENSED PROFESSIONAL ENGINEER LIC. NO. 18520 DATE 6/18/12	STATE PROJ. NO. 1901-148 (T.H. 13) SHEET NO. 157 OF 442 SHEETS

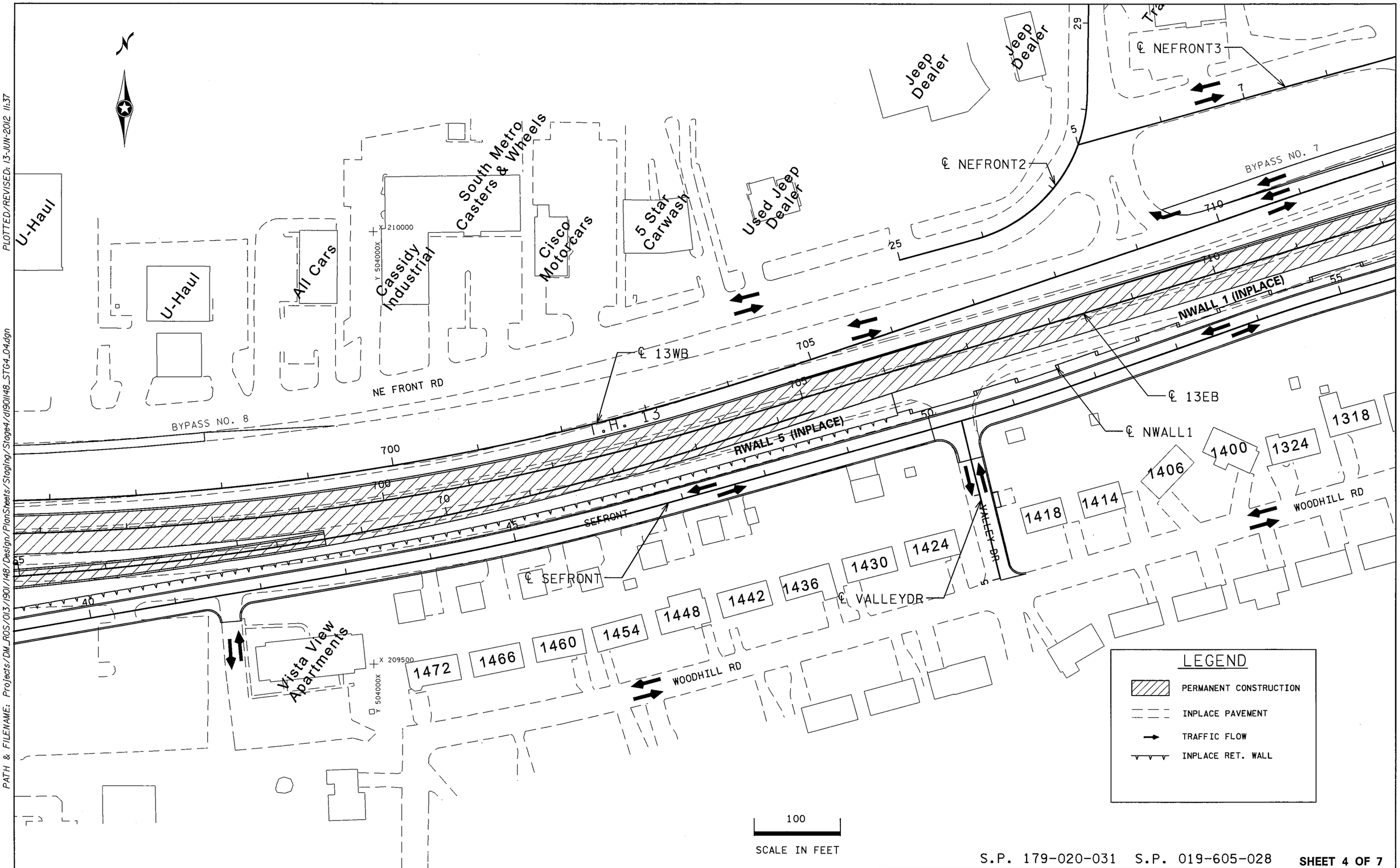

S.P. 179-020-031 S.P. 019-605-028 **SHEET 4 OF 7**

STAGING PLANS – STAGE 4

DRAWN BY: GLJ	CHECKED BY: HS	CERTIFIED BY LICENSED PROFESSIONAL ENGINEER	LIC. NO. 18520 DATE 6/18/12	STATE PROJ. NO. 1901-148 (T.H. 13)	SHEET NO. 158 OF 442 SHEETS

DISTRICT #: METRO
IPLOT NAME: d190l148_STG4_04
PATH & FILENAME: Projects/DM_ROS/013/190l/148/Design/PlanSheets/Staging/Stage4/d190l148_STG4_04.dgn
PLOTTED/REVISED: 13-JUN-2012 11:37

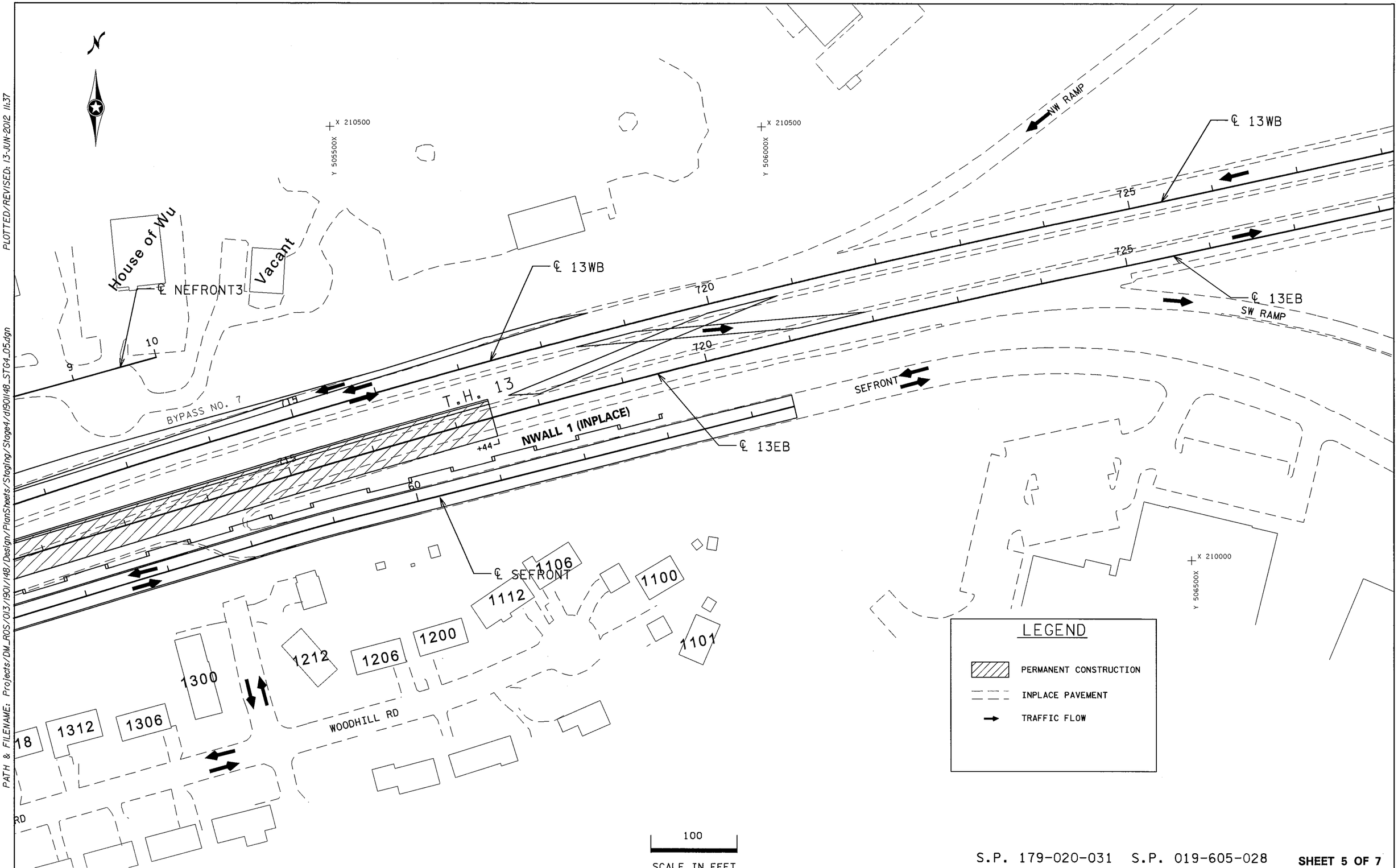

PLOTTED/REVISED: 13-JUN-2012 11:37

DISTRICT #: METRO
IPLOT NAME: d1901148_STG4_05
PATH & FILENAME: Projects/DM_ROS/013/1901/148/Design/PlanSheets/Staging/Stage4/d1901148_STG4_05.dgn

S.P. 179-020-031 S.P. 019-605-028 **SHEET 5 OF 7**

STAGING PLANS - STAGE 4

DRAWN BY: GLJ	CHECKED BY: HS	CERTIFIED BY [signature] LICENSED PROFESSIONAL ENGINEER	LIC. NO. 18520 DATE 6/18/12	STATE PROJ. NO. 1901-148 (T.H. 13)	SHEET NO. 159 OF 442 SHEETS

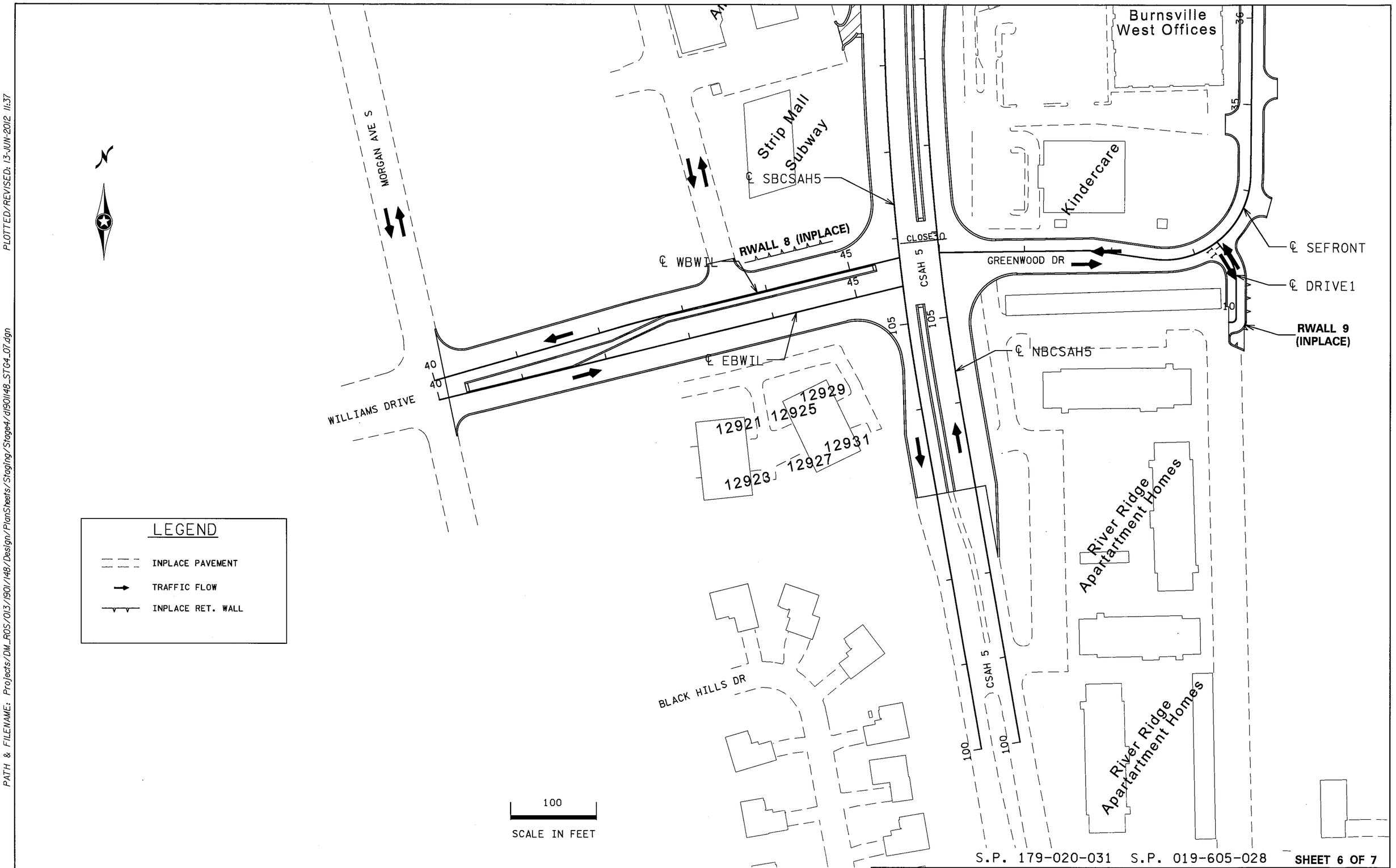

S.P. 179-020-031 S.P. 019-605-028 SHEET 6 OF 7

STAGING PLANS – STAGE 4

DRAWN BY: GLJ	CHECKED BY: HS	CERTIFIED BY LICENSED PROFESSIONAL ENGINEER LIC. NO. 18520 DATE 6/18/12	STATE PROJ. NO. 1901-148 (T.H. 13) SHEET NO. 160 OF 442 SHEETS

DISTRICT : METRO
IPLOT NAME: d190148_STG4_07
PATH & FILENAME: Projects/DM_ROS/013/1901/148/Design/PlanSheets/Staging/Stage4/d190148_STG4_07.dgn
PLOTTED/REVISED: 13-JUN-2012 11:37

PLOTTED/REVISED: 13-JUN-2012 11:37
DISTRICT *: METRO
IPLOT NAME: d1901148_STG4_08
PATH & FILENAME: Projects/DM_ROS/013/1901/148/Design/PlanSheets/Staging/Stage4/d1901148_STG4_08.dgn

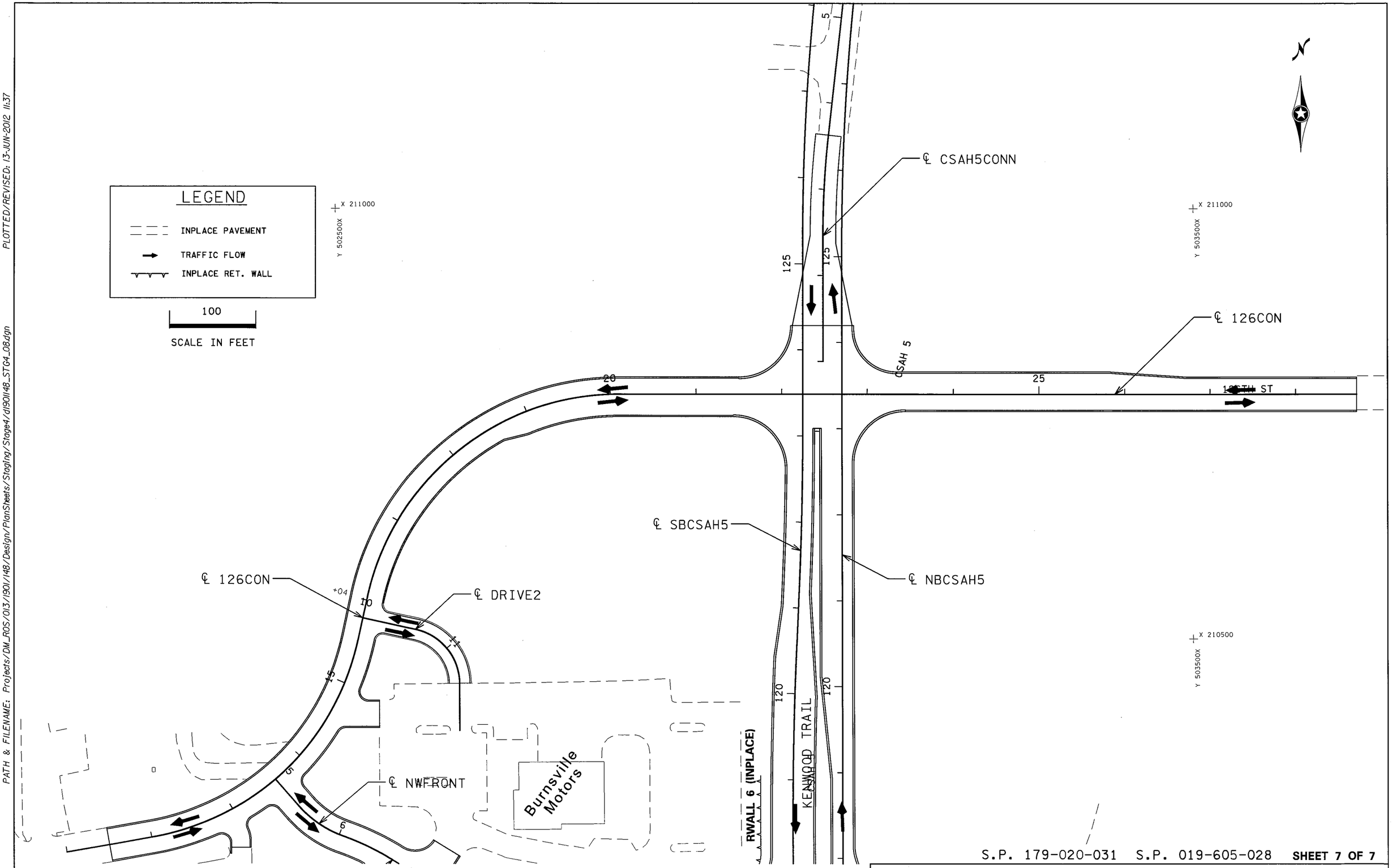

S.P. 179-020-031 S.P. 019-605-028 **SHEET 7 OF 7**

STAGING PLANS – STAGE 4

DRAWN BY: GLJ	CHECKED BY: HS	CERTIFIED BY _____ LICENSED PROFESSIONAL ENGINEER	LIC. NO. 18520 DATE 6/18/12	STATE PROJ. NO. 1901-148 (T.H. 13)	SHEET NO. 161 OF 442 SHEETS

STAGE 4A TRAFFIC

1. CLOSE T.H. 13 E.B. FROM STA. 717+44 TO THE T.H. 35W BRIDGE.
2. CLOSE THE T.H. 13 E.B. RAMP TO T.H. 35W S.B.
3. CLOSE THE S.W. LOOP AT T.H. 35W WHEN THE T.H. 13 E.B. CONSTURCTION NEARS THAT LOCATION.
4. OPEN BYPASS NO. 5 EAST OF THE T.H.35W BRIDGE.
5. ALL OTHER ROADWAYS TO REMAIN OPEN AS IN STAGE 4.

STAGE 4A CONSTRUCTION

1. COMPLETE THE T.H. 13 E.B. GRADING FROM STA. 717+44 TO THE T.H. 35W BRIDGE.
2. COMPLETE CONCRETE PAVING FOR T.H. 13 STA. E.B. STA. 670+00 TO THE T.H. 35W BRIDGE, THE S.W. RAMP AND S.E. RAMP.
3. CONSTRUCT TEMPORARY CONNECTION FROM NEW T.H. 13 E.B. TO DUPONT AVE.
4. COMPLETE THE SOUTHERLY HALF OF NEW BRIDGE NO. 19036.
5. COMPLETE SOUTHERLY PORTION OF CSAH5.
6. COMPLETE ALL OTHER WORK IDENTIFIED IN STAGE 4.

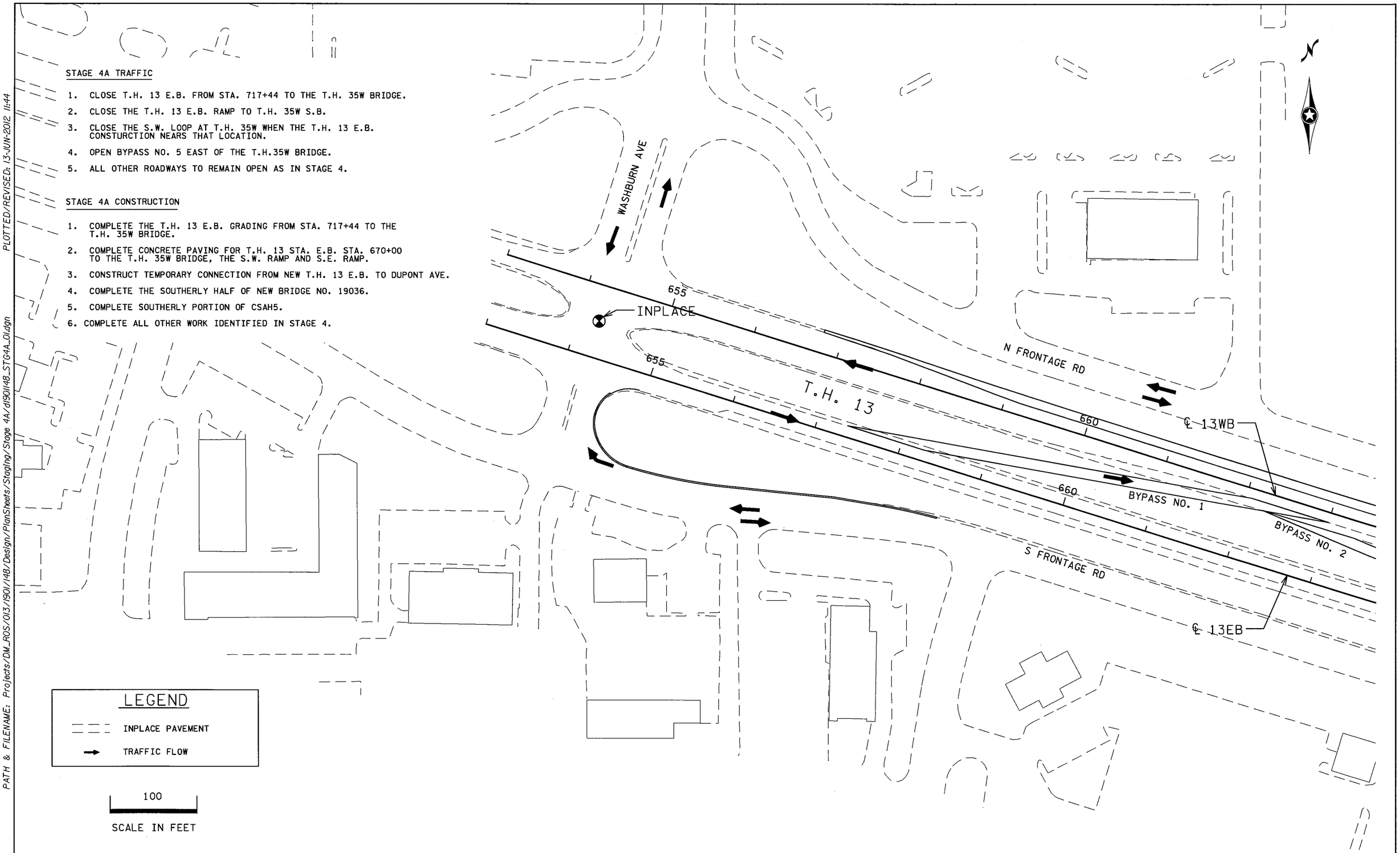

S.P. 179-020-031 S.P. 019-605-028 **SHEET 1 OF 8**

STAGING PLANS - STAGE 4A

DRAWN BY: GLJ	CHECKED BY: HS	CERTIFIED BY _____ LICENSED PROFESSIONAL ENGINEER LIC. NO. 18520 DATE 6/18/12	STATE PROJ. NO. 1901-148 (T.H. 13) SHEET NO. 162 OF 442 SHEETS

DISTRICT #: METRO
IPLOT NAME: d1901148_STG4A_01
PATH & FILENAME: Projects/DM_ROS/013/1901/148/Design/PlanSheets/Staging/Stage 4A/d1901148_STG4A_01.dgn
PLOTTED/REVISED: 13-JUN-2012 11:44

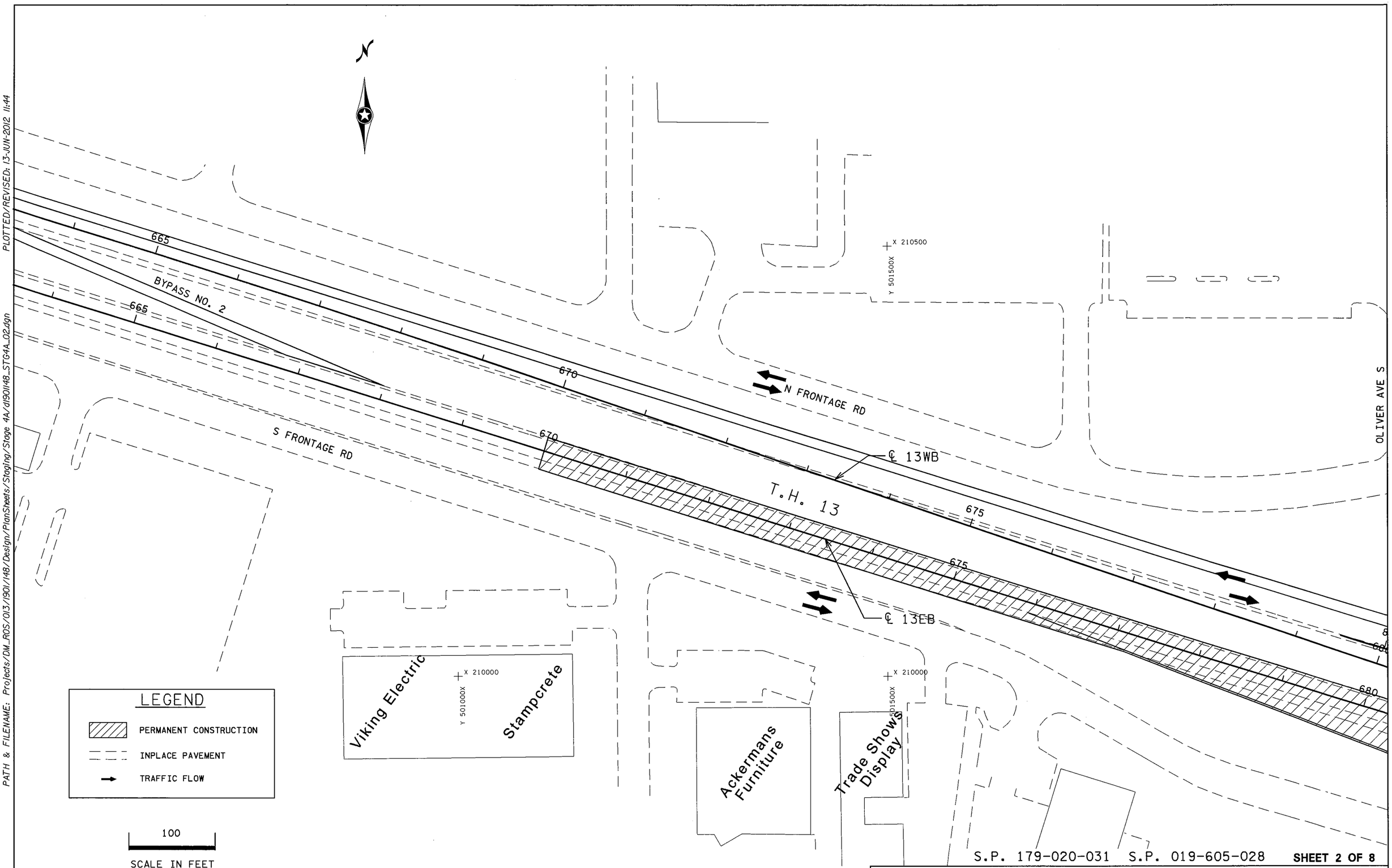

S.P. 179-020-031 S.P. 019-605-028 **SHEET 2 OF 8**

STAGING PLANS - STAGE 4A

DRAWN BY: GLJ	CHECKED BY: HS	CERTIFIED BY LICENSED PROFESSIONAL ENGINEER	LIC. NO. 18520 DATE 6/18/12	STATE PROJ. NO. 1901-148 (T.H. 13) SHEET NO. 163 OF 442 SHEETS

PLOTTED/REVISED: 13-JUN-2012 11:44

DISTRICT #: METRO
IPLOT NAME: d1901148_STG4A_02
PATH & FILENAME: Projects/DM_ROS/013/1901/148/Design/PlanSheets/Staging/Stage 4A/d1901148_STG4A_02.dgn

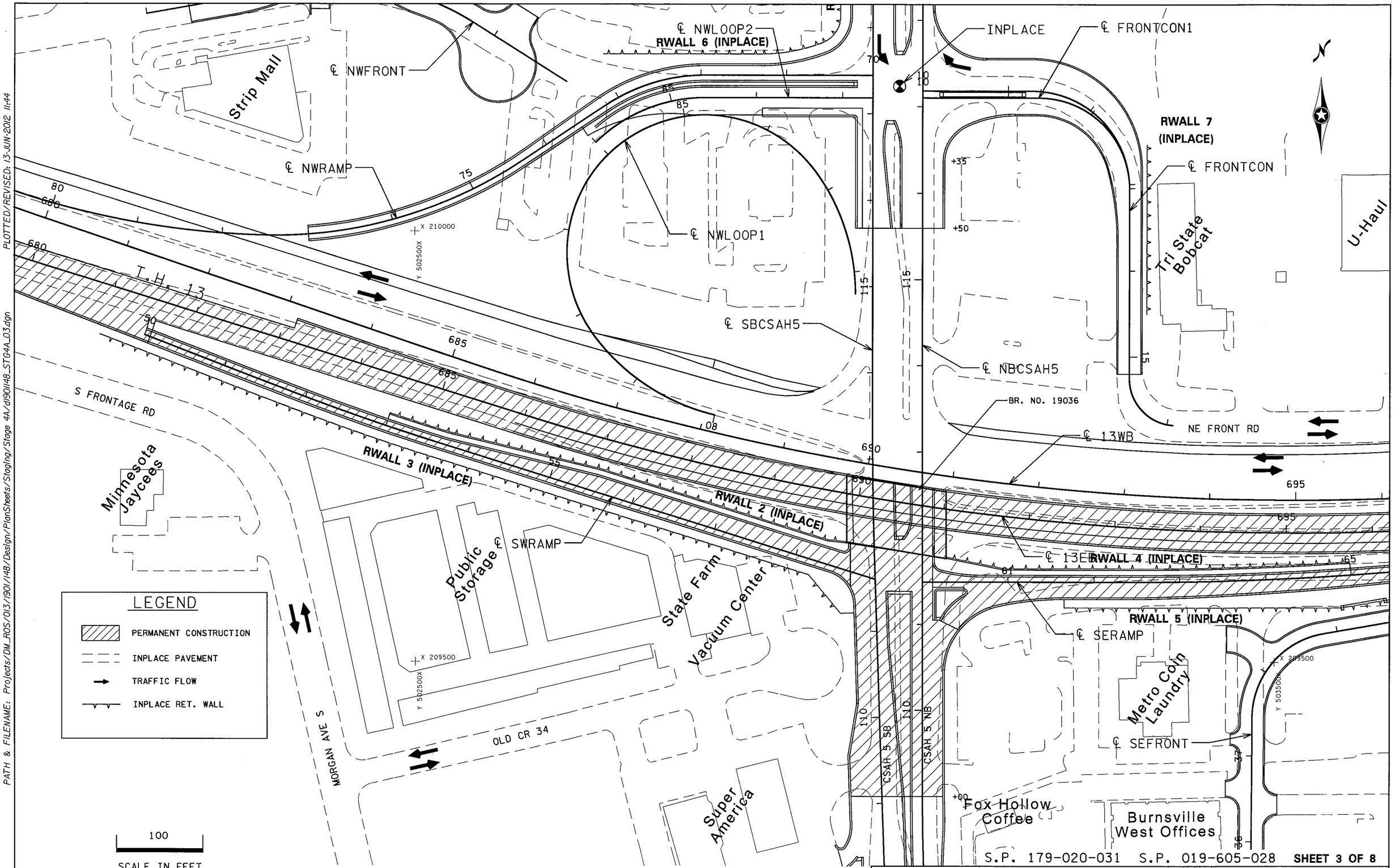

DISTRICT #: METRO
IPLOT NAME: d190I148_STG4A_03
PATH & FILENAME: Projects/DM_ROS/013/1901/148/Design/PlanSheets/Staging/Stage 4A/d190I148_STG4A_03.dgn
PLOTTED/REVISED: 13-JUN-2012 11:44

STAGING PLANS – STAGE 4A

DRAWN BY: GLJ	CHECKED BY: HS	CERTIFIED BY _____ LICENSED PROFESSIONAL ENGINEER	LIC. NO. 20534 DATE 6/18/12	STATE PROJ. NO. 1901-148 (T.H. 13)	SHEET NO. 164 OF 442 SHEETS

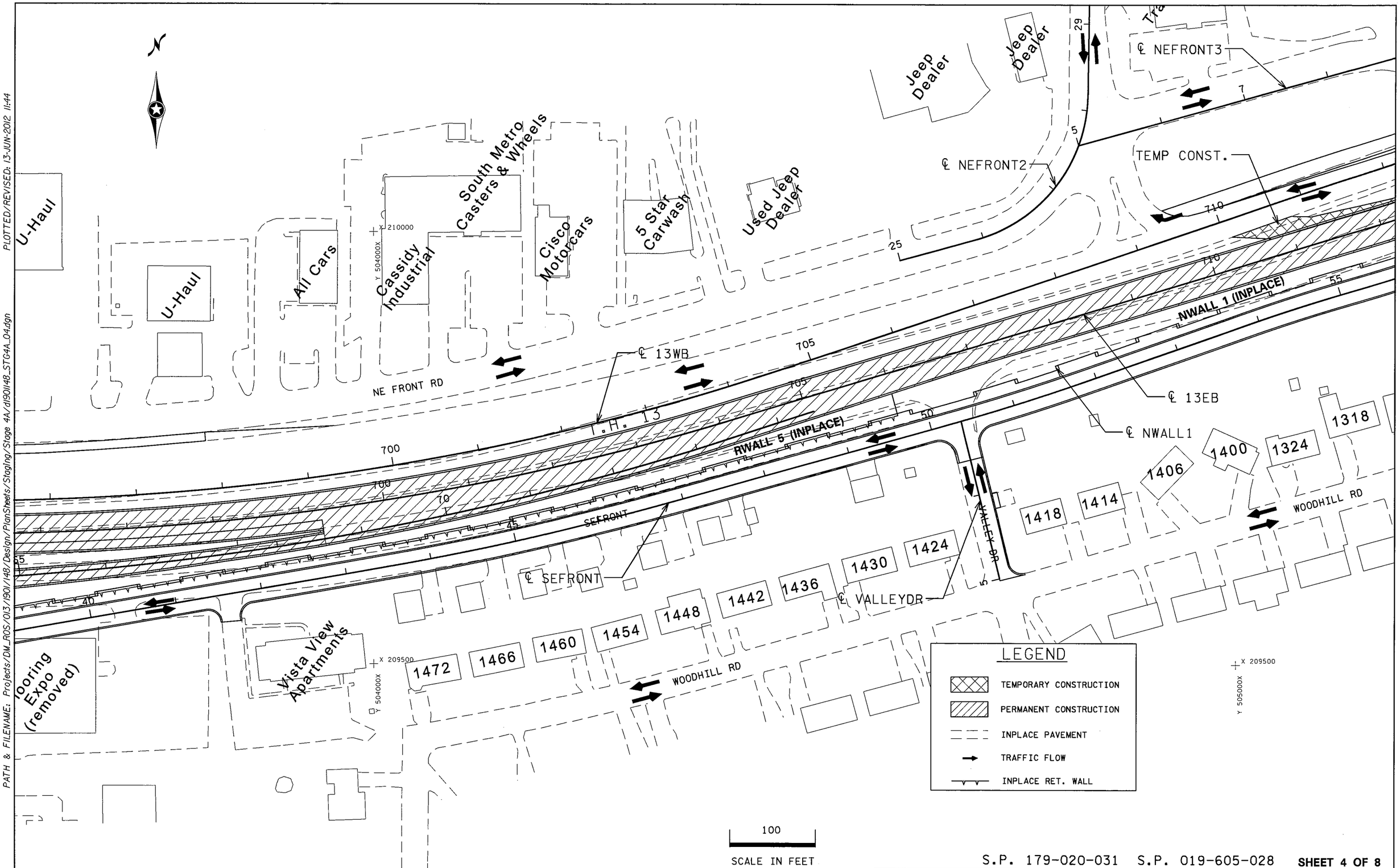

S.P. 179-020-031 S.P. 019-605-028 **SHEET 4 OF 8**

STAGING PLANS – STAGE 4A

DRAWN BY: GLJ	CHECKED BY: HS	CERTIFIED BY _____ LICENSED PROFESSIONAL ENGINEER LIC. NO. 18520 DATE 6/18/12	STATE PROJ. NO. 1901-148 (T.H. 13)	SHEET NO. 165 OF 442 SHEETS

DISTRICT #: METRO
IPLOT NAME: d1901148_STG4A_04
PATH & FILENAME: Projects/DM_ROS/013/1901/148/Design/PlanSheets/Staging/Stage 4A/d1901148_STG4A_04.dgn
PLOTTED/REVISED: 13-JUN-2012 11:44

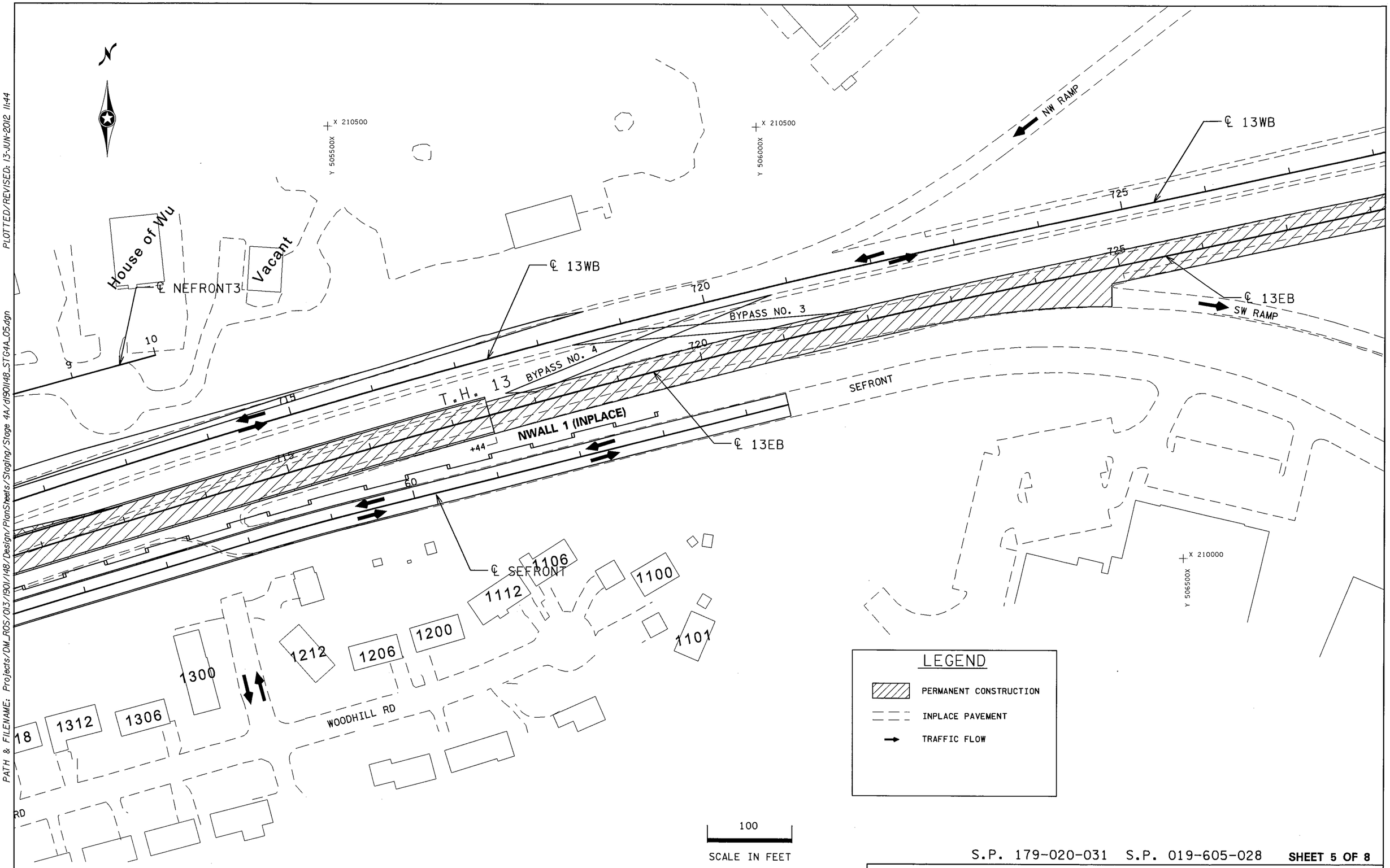

S.P. 179-020-031 S.P. 019-605-028 **SHEET 5 OF 8**

STAGING PLANS - STAGE 4A

DRAWN BY: GLJ	CHECKED BY: HS	CERTIFIED BY LICENSED PROFESSIONAL ENGINEER	LIC. NO. 18520 DATE 6/18/12	STATE PROJ. NO. 1901-148 (T.H. 13) SHEET NO. 166 OF 442 SHEETS

DISTRICT #: METRO
IPLOT NAME: d1901148_STG4A_05
PATH & FILENAME: Projects/DM_ROS/013/1901/148/Design/PlanSheets/Staging/Stage 4A/d1901148_STG4A_05.dgn
PLOTTED/REVISED: 13-JUN-2012 11:44

DISTRICT #: METRO
IPLOT NAME: d1901148_STG4A_05a
PATH & FILENAME: Projects/DM_ROS/013/1901/148/Design/PlanSheets/Staging/Stage 4A/d1901148_STG4A_05a.dgn
PLOTTED/REVISED: 13-JUN-2012 11:45

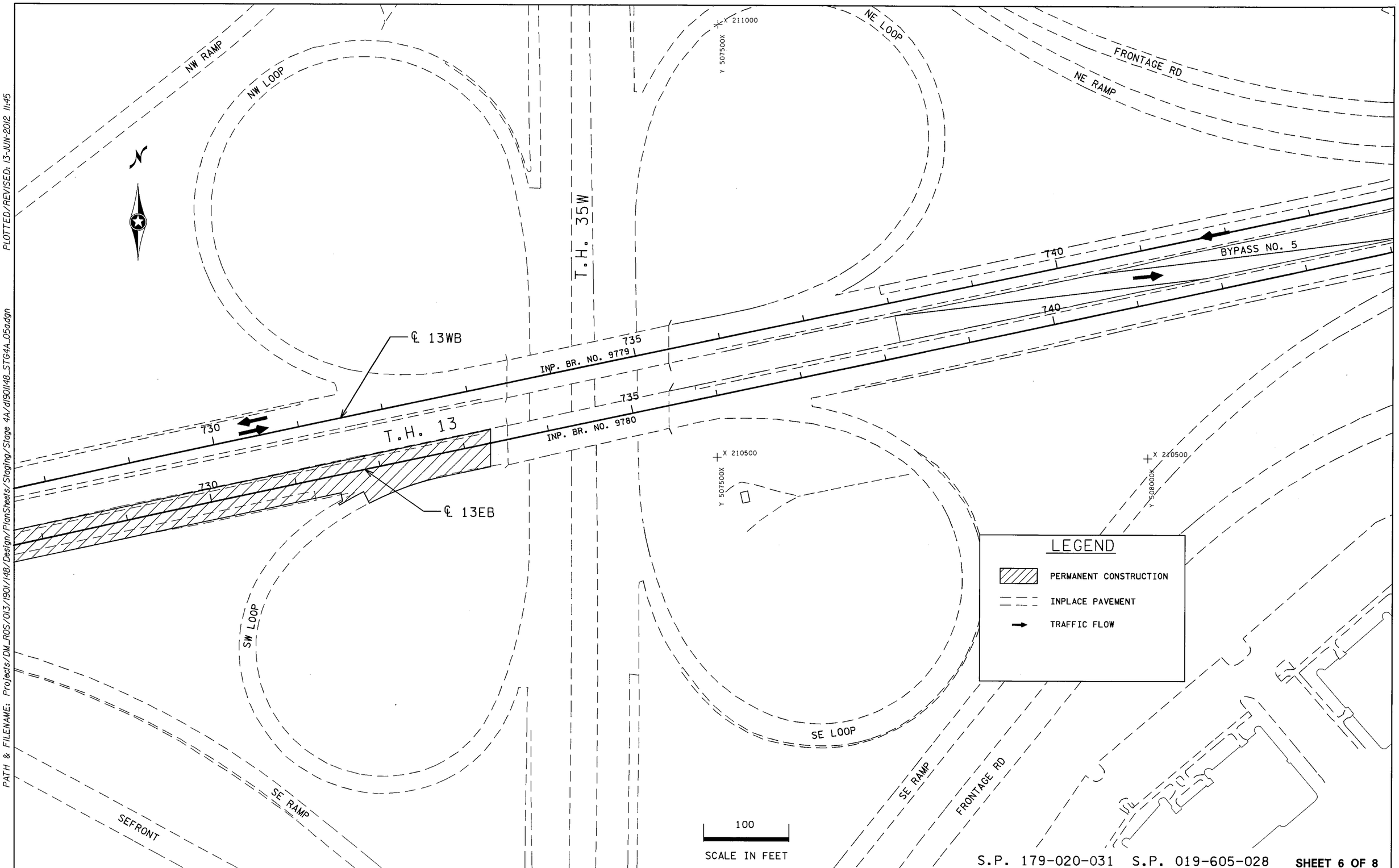

S.P. 179-020-031 S.P. 019-605-028 **SHEET 6 OF 8**

STAGING PLANS – STAGE 4A

DRAWN BY: GLJ	CHECKED BY: HS	CERTIFIED BY _____ LICENSED PROFESSIONAL ENGINEER LIC. NO. 18520 DATE 6/18/12	STATE PROJ. NO. 1901-148 (T.H. 13) SHEET NO. 167 OF 442 SHEETS

DISTRICT #: METRO
IPLOT NAME: d1901148_STG4A_06
PATH & FILENAME: Projects/DM_ROS/013/1901/148/Design/PlanSheets/Staging/Stage 4A/d1901148_STG4A_06.dgn
PLOTTED/REVISED: 13-JUN-2012 11:45

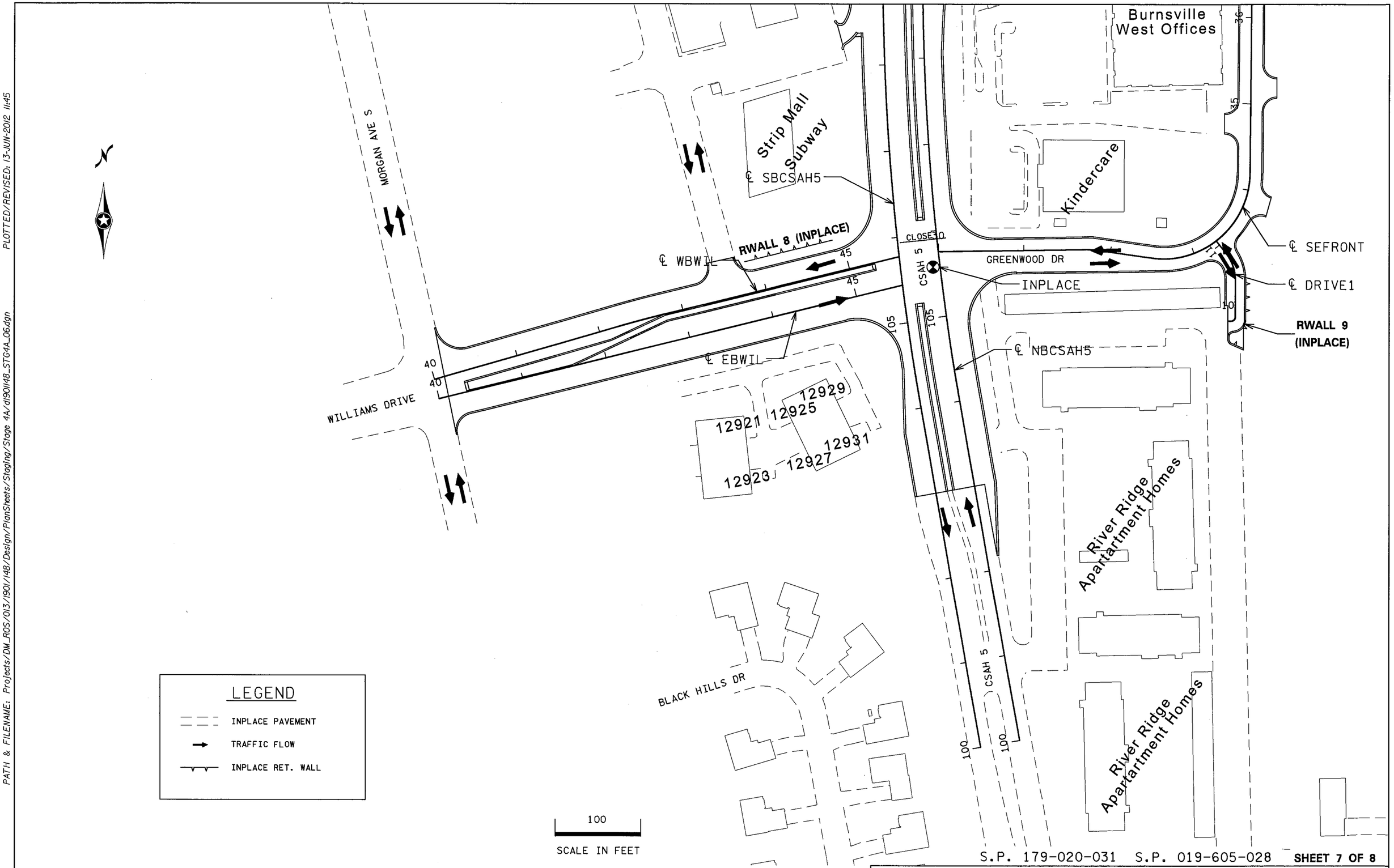

S.P. 179-020-031 S.P. 019-605-028 **SHEET 7 OF 8**

STAGING PLANS - STAGE 4A

DRAWN BY: GLJ	CHECKED BY: HS	CERTIFIED BY _____ LICENSED PROFESSIONAL ENGINEER LIC. NO. 18520 DATE 6/18/12	STATE PROJ. NO. 1901-148 (T.H. 13) SHEET NO. 168 OF 442 SHEETS

DISTRICT : METRO
IPLOT NAME: d1901148_STG4A_07
PATH & FILENAME: Projects/DM_ROS/013/1901/148/Design/PlanSheets/Staging/Stage 4A/d1901148_STG4A_07.dgn
PLOTTED/REVISED: 13-JUN-2012 11:45

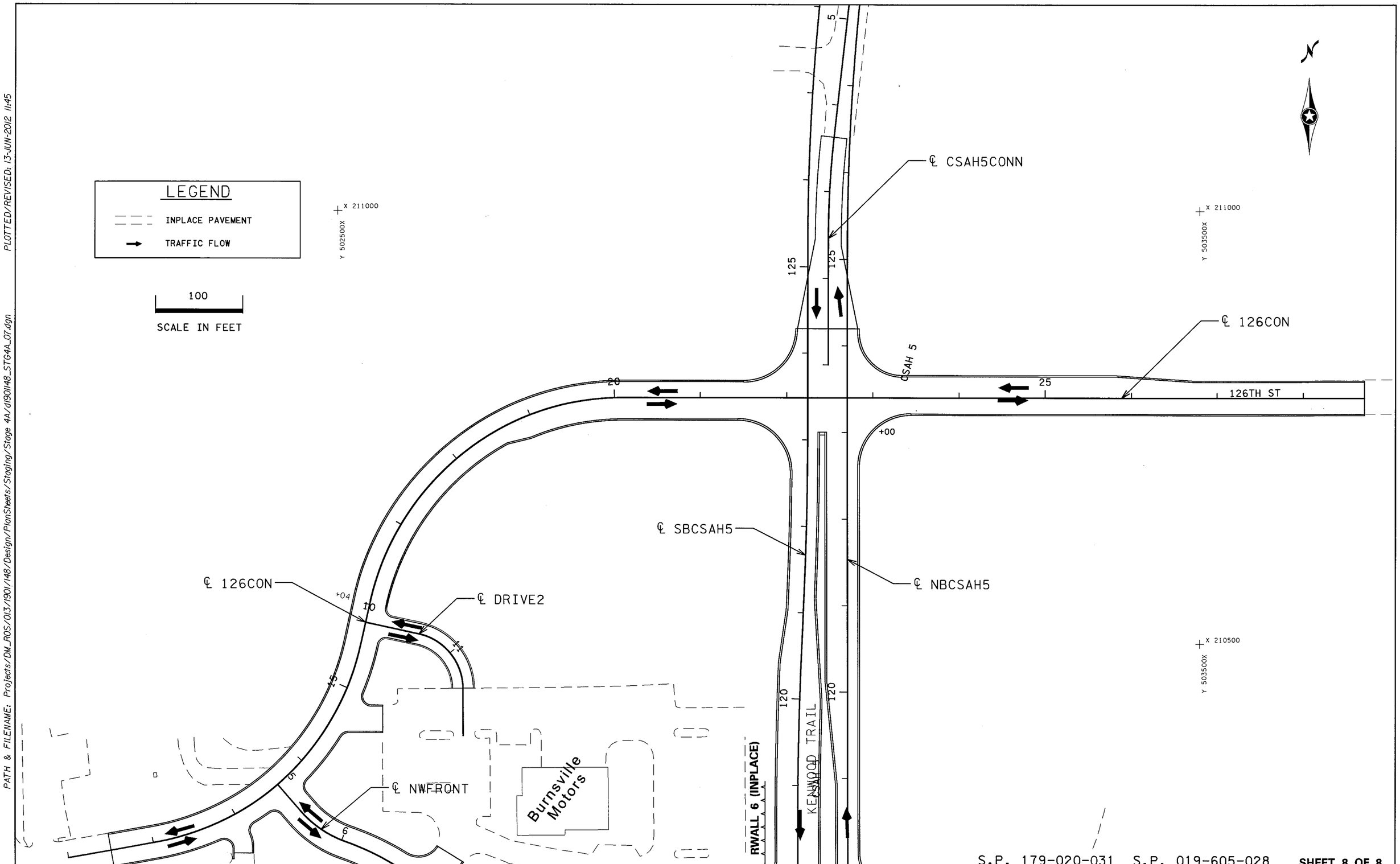

S.P. 179-020-031 S.P. 019-605-028 **SHEET 8 OF 8**

STAGING PLANS - STAGE 4A

DRAWN BY: GLJ	CHECKED BY: HS	CERTIFIED BY _____ LICENSED PROFESSIONAL ENGINEER	LIC. NO. 18520 DATE 6/18/12	STATE PROJ. NO. 1901-148 (T.H. 13)	SHEET NO. 169 OF 442 SHEETS

STAGE 5 TRAFFIC

1. SWITCH ALL OF THE T.H. 13 TRAFFIC TO THE COMPLETED E.B. ROADWAY VIA THE MEDIAN CROSS-OVERS. ONE LANE IN EACH DIRECTION.
2. OPEN CSAH5 SOUTH OF BRIDGE NO. 19036.
3. OPEN PROVIDED TEMPORARY CONNECTION FROM T.H. 13 W.B TO DUPONT AVE.
4. CSAH5 NORTH OF T.H 13 IS CLOSED TO RAMP INTERSECTIONS.
5. OPEN THE S.W. AND S.E. RAMPS TO AND FROM CSAH5.
6. ALL OTHER ROADWAYS TO REMAIN OPEN AS IN STAGE 4A.

STAGE 5 CONSTRUCTION

1. COMPLETE CONSTRUCTION OF THE NORTH HALF OF NEW BRIDGE NO. 19036.
2. CONSTRUCT GRADING, DRAINAGE, AND PAVING T.H.13 W.B. STA. 664+64 TO 709+00.
3. CONSTRUCT RETAINING WALL NO. 1 ALONG T.H.13 W.B.
4. CONSTRUCT NWLOOP1 AND COMPLETE NWLOOP2.
5. COMPLETE NWRAMP CONSTRUCTION.
6. COMPLETE CSAH5 CONSTRUCTION FROM BRIDGE NO. 19036 TO STA 115+50.

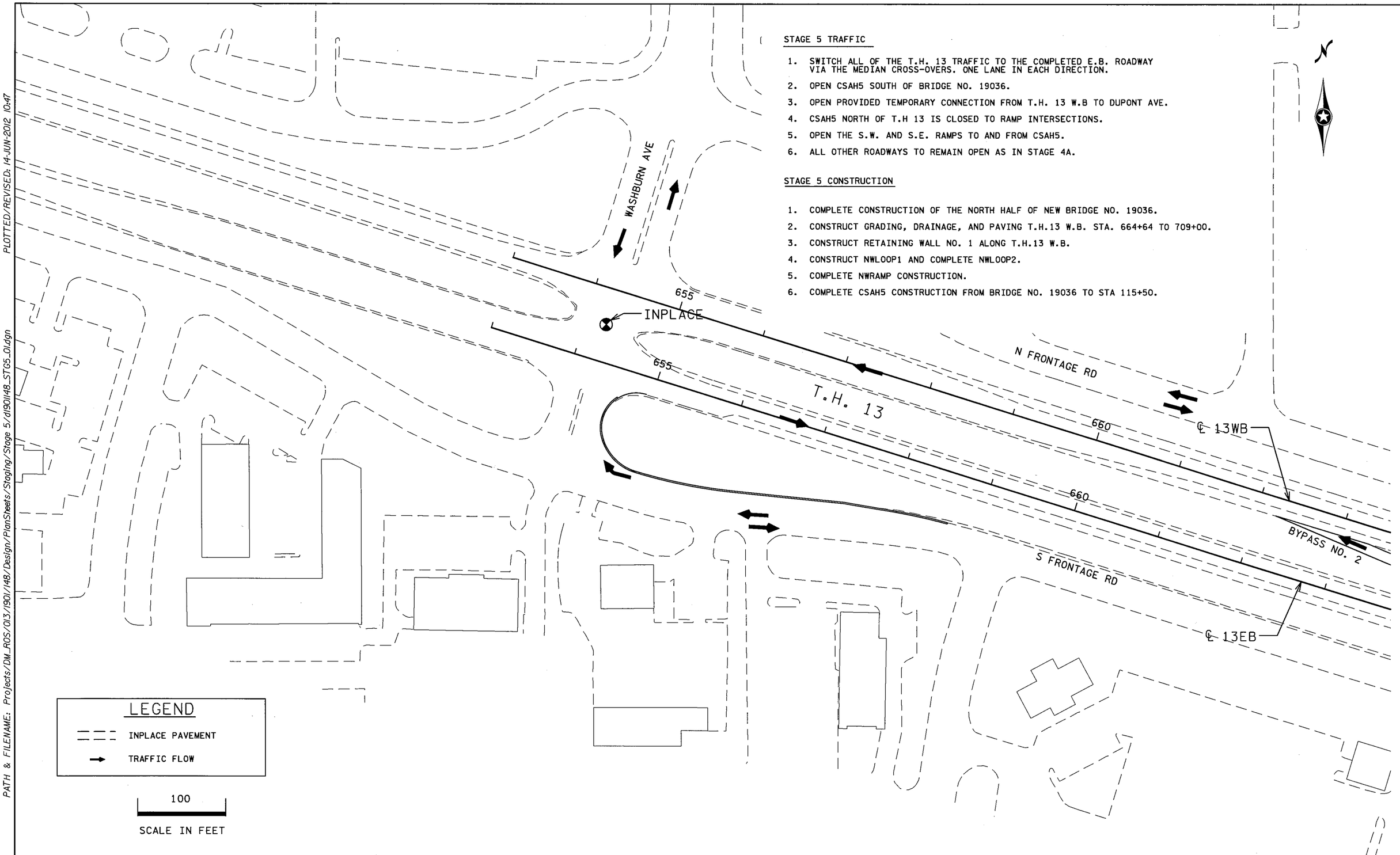

S.P. 179-020-031 S.P. 019-605-028 **SHEET 1 OF 7**

STAGING PLANS - STAGE 5

DRAWN BY: GLJ	CHECKED BY: HS	CERTIFIED BY LICENSED PROFESSIONAL ENGINEER LIC. NO. 18520 DATE 6/18/12	STATE PROJ. NO. 1901-148 (T.H. 13) SHEET NO. 170 OF 442 SHEETS

DISTRICT #: METRO
IPLOT NAME: d190I148_STG5_01
PATH & FILENAME: Projects/DM_ROS/013/1901/148/Design/PlanSheets/Staging/Stage 5/d190I148_STG5_01.dgn
PLOTTED/REVISED: 14-JUN-2012 10:47

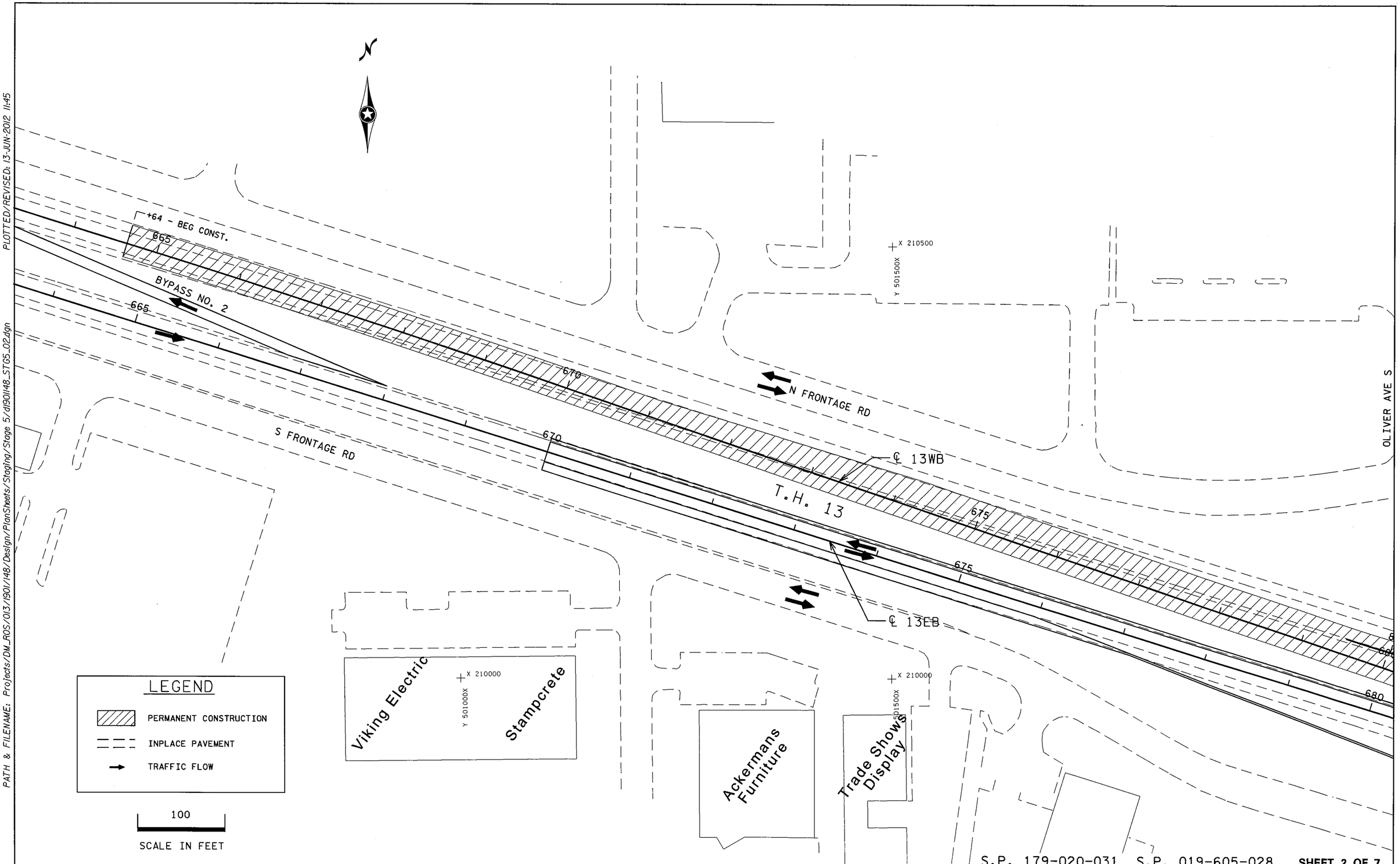

S.P. 179-020-031 S.P. 019-605-028 **SHEET 2 OF 7**

STAGING PLANS - STAGE 5

DRAWN BY: GLJ	CHECKED BY: HS	CERTIFIED BY _____ LICENSED PROFESSIONAL ENGINEER	LIC. NO. 18520 DATE 6/18/12	STATE PROJ. NO. 1901-148 (T.H. 13)	SHEET NO. 171 OF 442 SHEETS

DISTRICT #: METRO
IPLOT NAME: d190l148_STG5_02
PATH & FILENAME: Projects/DM_ROS/013/190l/148/Design/PlanSheets/Staging/Stage 5/d190l148_STG5_02.dgn
PLOTTED/REVISED: 13-JUN-2012 11:45

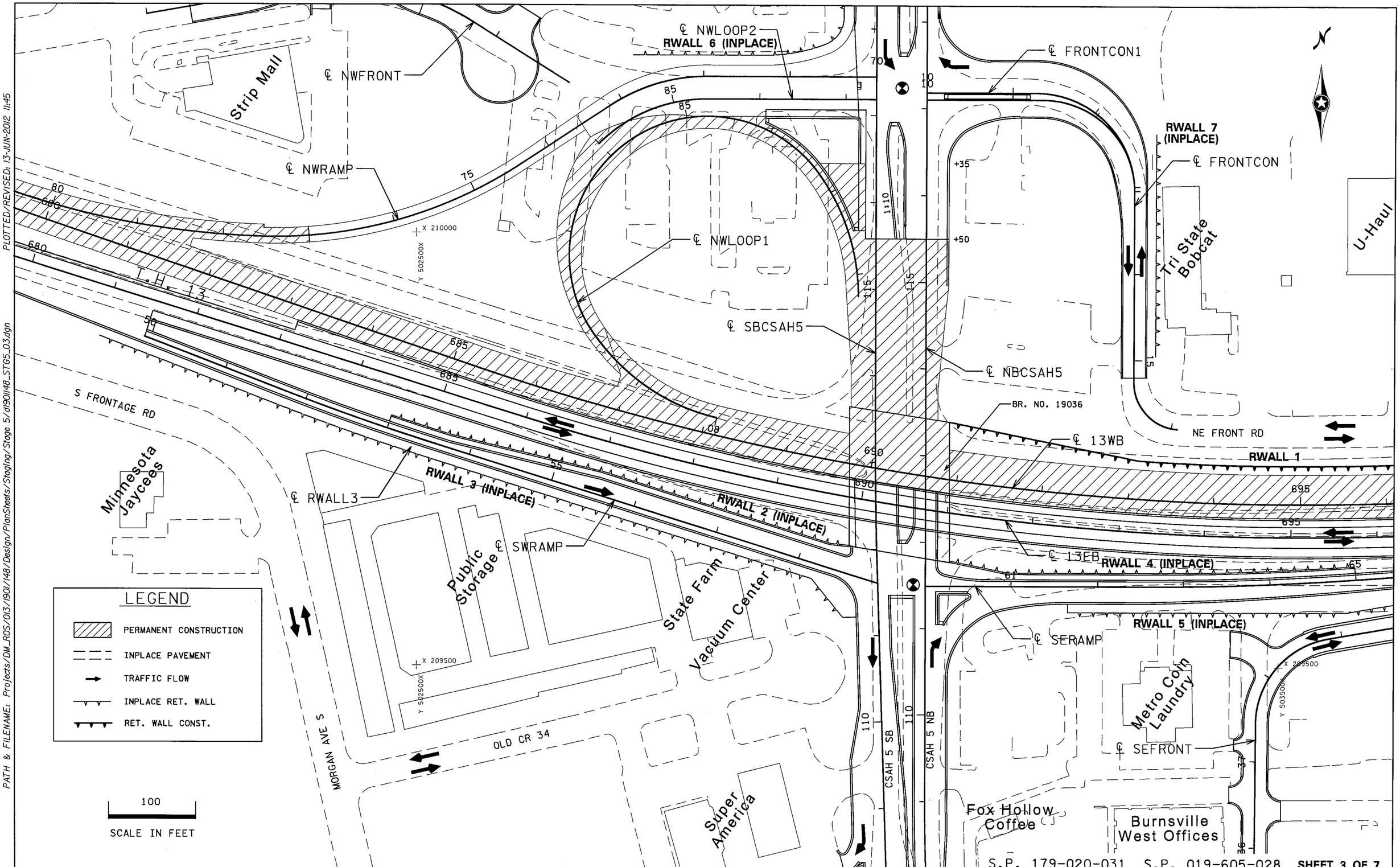

S.P. 179-020-031 S.P. 019-605-028 **SHEET 3 OF 7**

STAGING PLANS - STAGE 5

DRAWN BY: GLJ	CHECKED BY: HS	CERTIFIED BY _____ LICENSED PROFESSIONAL ENGINEER	LIC. NO. 20534 DATE 6/18/12	STATE PROJ. NO. 1901-148 (T.H. 13)	SHEET NO. 172 OF 442 SHEETS

DISTRICT #: METRO
IPLOT NAME: d1901148_STG5_03
PATH & FILENAME: Projects/DM_ROS/013/1901/148/Design/PlanSheets/Staging/Stage 5/d1901148_STG5_03.dgn
PLOTTED/REVISED: 13-JUN-2012 11:45

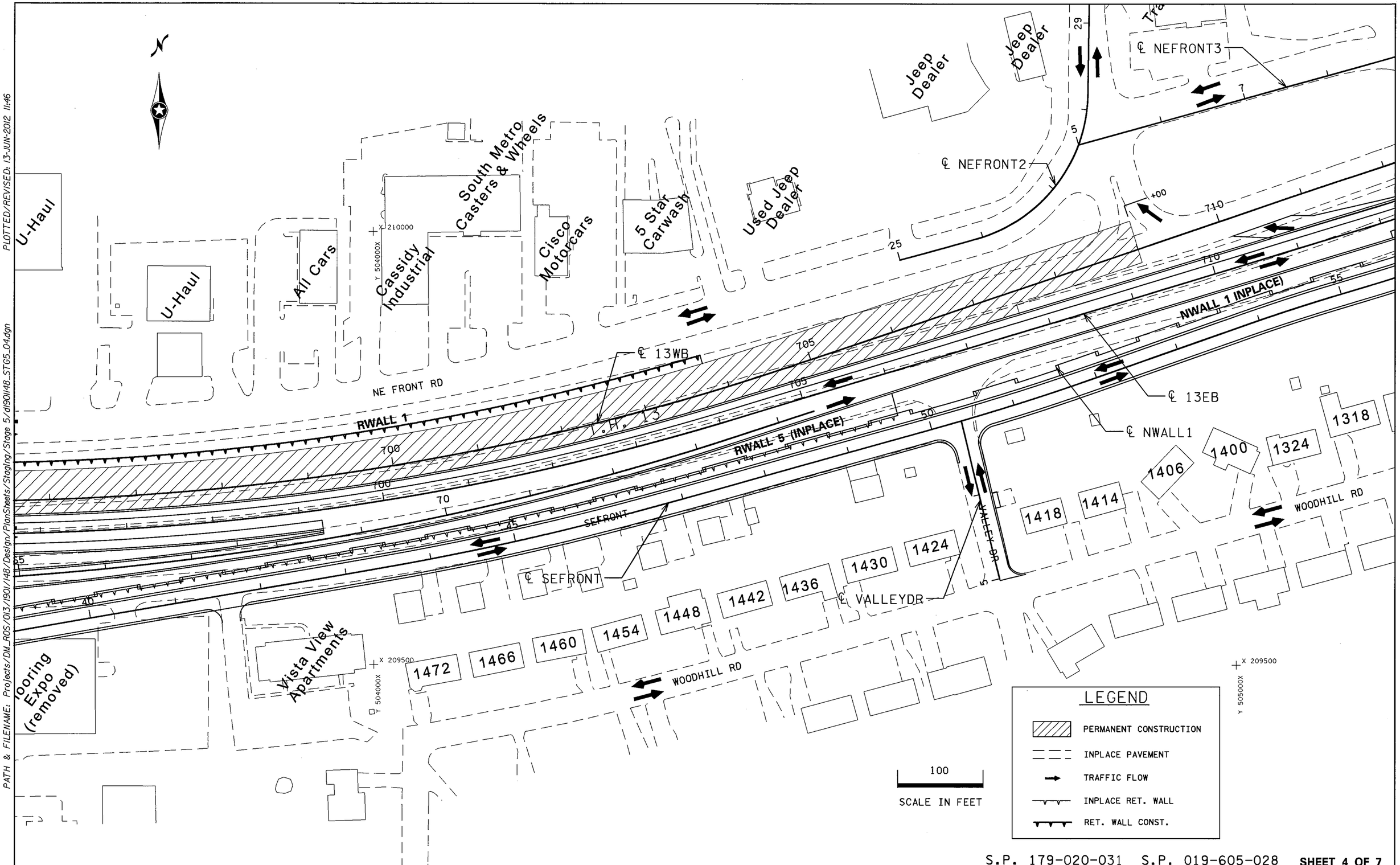

S.P. 179-020-031 S.P. 019-605-028 **SHEET 4 OF 7**

STAGING PLANS – STAGE 5

DRAWN BY: GLJ	CHECKED BY: HS	CERTIFIED BY _____ LICENSED PROFESSIONAL ENGINEER LIC. NO. 18520 DATE 6/18/12	STATE PROJ. NO. 1901-148 (T.H. 13)	SHEET NO. 173 OF 442 SHEETS

DISTRICT #: METRO
IPLOT NAME: d190ll48_ST05_04
PATH & FILENAME: Projects/DM_ROS/013/190l/148/Design/PlanSheets/Staging/Stage 5/d190ll48_ST05_04.dgn
PLOTTED/REVISED: 13-JUN-2012 11:46

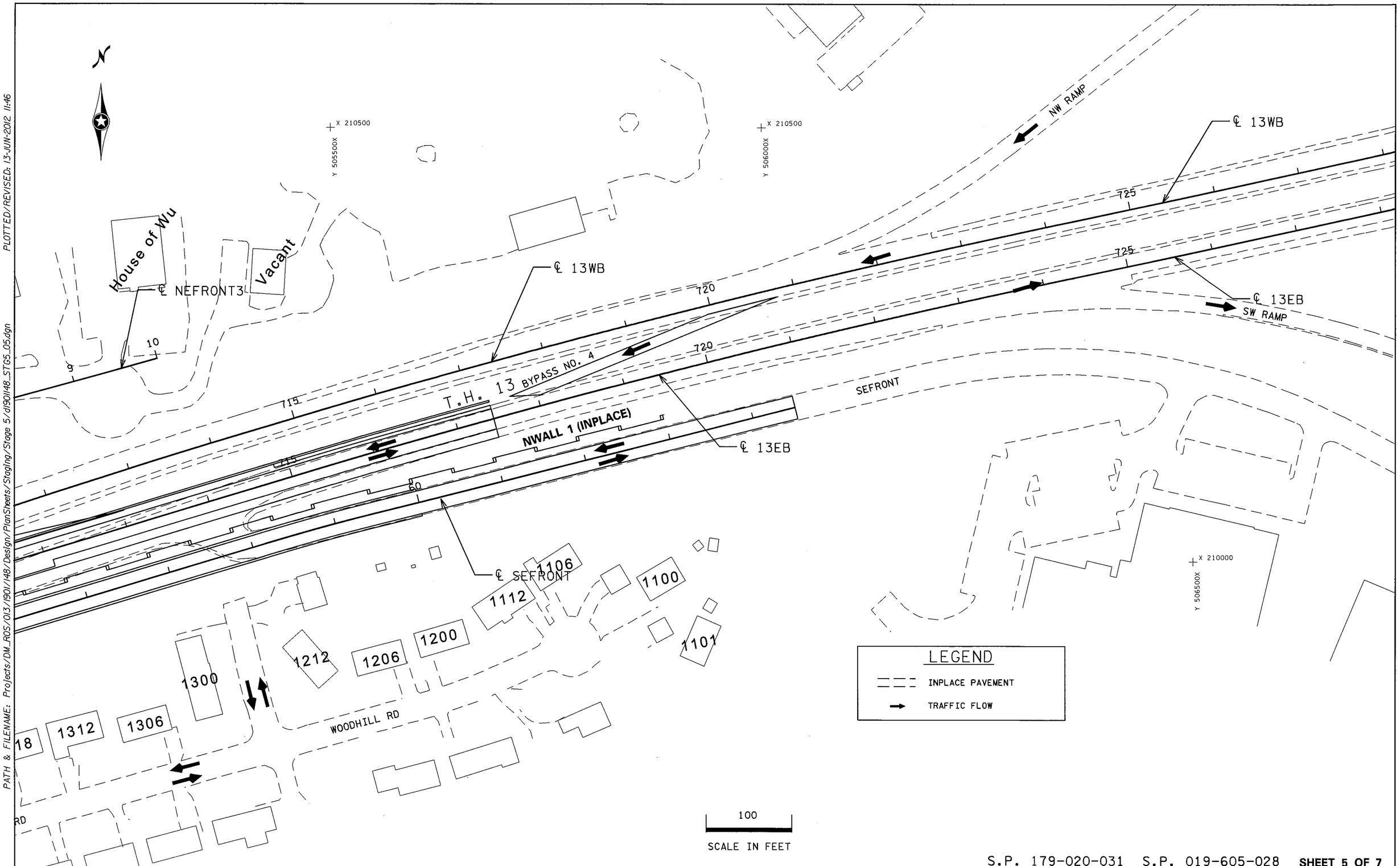

S.P. 179-020-031 S.P. 019-605-028 **SHEET 5 OF 7**

STAGING PLANS - STAGE 5

DRAWN BY: GLJ	CHECKED BY: HS	CERTIFIED BY LICENSED PROFESSIONAL ENGINEER LIC. NO. 18520 DATE 6/18/12	STATE PROJ. NO. 1901-148 (T.H. 13) SHEET NO. 174 OF 442 SHEETS

DISTRICT #: METRO
IPLOT NAME: d1901148_STG5_05
PATH & FILENAME: Projects/DM_ROS/013/1901/148/Design/PlanSheets/Staging/Stage 5/d1901148_STG5_05.dgn
PLOTTED/REVISED: 13-JUN-2012 11:46

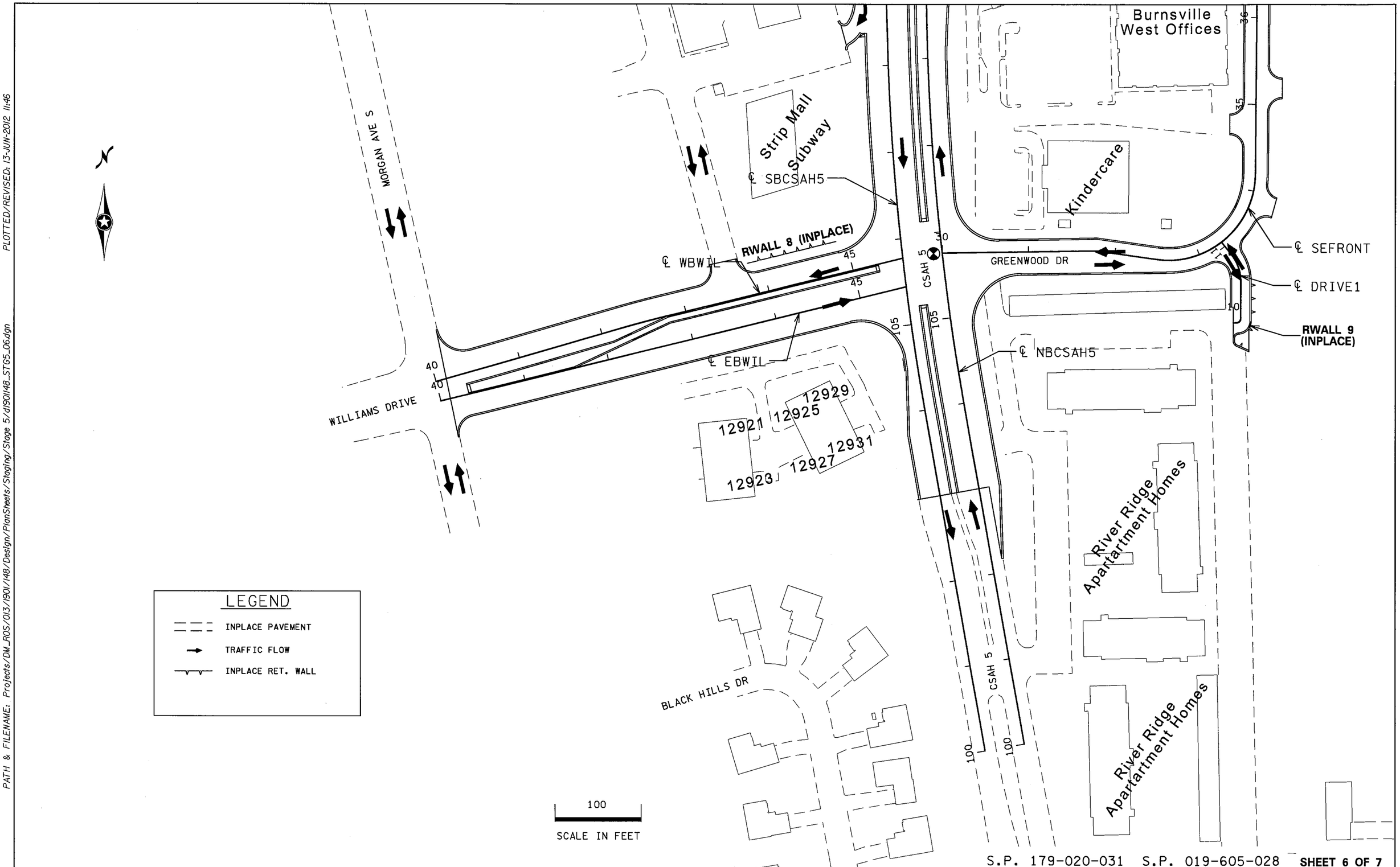

S.P. 179-020-031 S.P. 019-605-028 **SHEET 6 OF 7**

STAGING PLANS - STAGE 5

DRAWN BY: GLJ	CHECKED BY: HS	CERTIFIED BY _____ LICENSED PROFESSIONAL ENGINEER LIC. NO. 18520 DATE 6/18/12	STATE PROJ. NO. 1901-148 (T.H. 13) SHEET NO. 175 OF 442 SHEETS

DISTRICT #: METRO
IPLOT NAME: d1901148_ST05_06
PATH & FILENAME: Projects/DM_ROS/013/1901/148/Design/PlanSheets/Staging/Stage 5/d1901148_ST05_06.dgn
PLOTTED/REVISED: 13-JUN-2012 11:46

DISTRICT #: METRO
IPLOT NAME: d1901148_STG5_07
PATH & FILENAME: Projects/DM_ROS/013/1901/148/Design/PlanSheets/Staging/Stage 5/d1901148_ST05_07.dgn
PLOTTED/REVISED: 13-JUN-2012 11:46

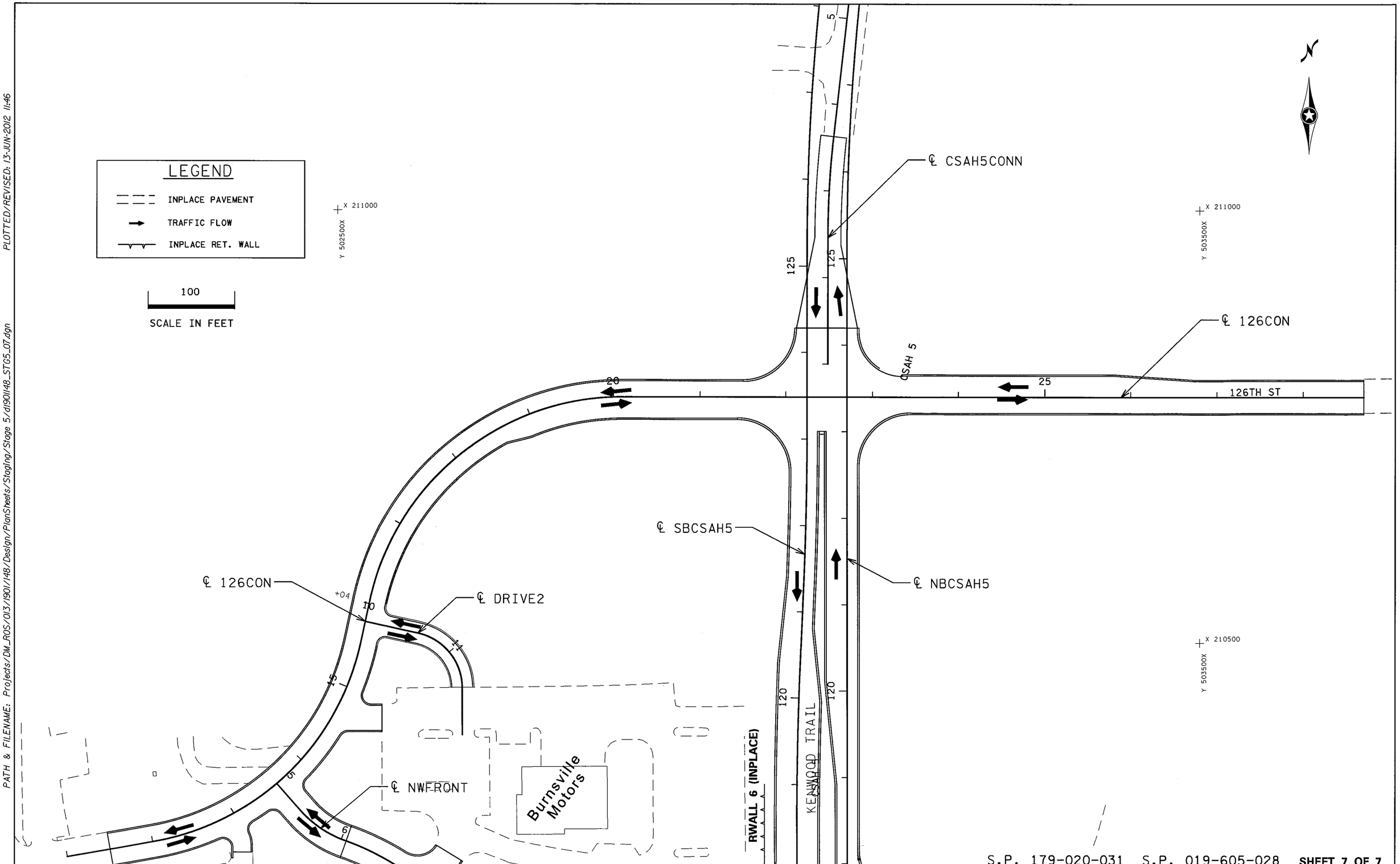

S.P. 179-020-031 S.P. 019-605-028 **SHEET 7 OF 7**

STAGING PLANS - STAGE 5

DRAWN BY: GLJ	CHECKED BY: HS	CERTIFIED BY _____ LICENSED PROFESSIONAL ENGINEER LIC. NO. 18520 DATE 6/18/12	STATE PROJ. NO. 1901-148 (T.H. 13) SHEET NO. 176 OF 442 SHEETS

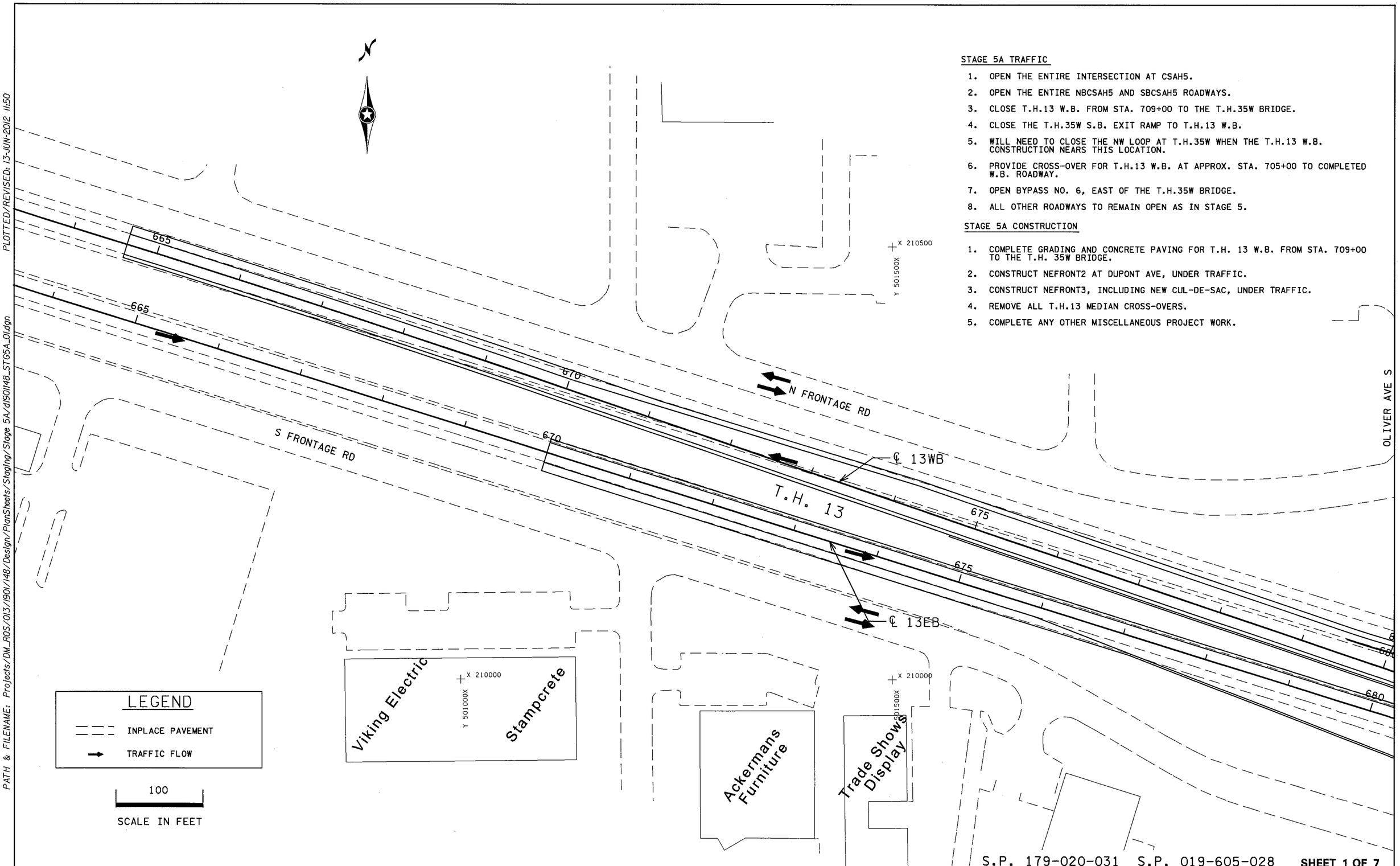

STAGE 5A TRAFFIC

1. OPEN THE ENTIRE INTERSECTION AT CSAH5.
2. OPEN THE ENTIRE NBCSAH5 AND SBCSAH5 ROADWAYS.
3. CLOSE T.H.13 W.B. FROM STA. 709+00 TO THE T.H.35W BRIDGE.
4. CLOSE THE T.H.35W S.B. EXIT RAMP TO T.H.13 W.B.
5. WILL NEED TO CLOSE THE NW LOOP AT T.H.35W WHEN THE T.H.13 W.B. CONSTRUCTION NEARS THIS LOCATION.
6. PROVIDE CROSS-OVER FOR T.H.13 W.B. AT APPROX. STA. 705+00 TO COMPLETED W.B. ROADWAY.
7. OPEN BYPASS NO. 6, EAST OF THE T.H.35W BRIDGE.
8. ALL OTHER ROADWAYS TO REMAIN OPEN AS IN STAGE 5.

STAGE 5A CONSTRUCTION

1. COMPLETE GRADING AND CONCRETE PAVING FOR T.H. 13 W.B. FROM STA. 709+00 TO THE T.H. 35W BRIDGE.
2. CONSTRUCT NEFRONT2 AT DUPONT AVE, UNDER TRAFFIC.
3. CONSTRUCT NEFRONT3, INCLUDING NEW CUL-DE-SAC, UNDER TRAFFIC.
4. REMOVE ALL T.H.13 MEDIAN CROSS-OVERS.
5. COMPLETE ANY OTHER MISCELLANEOUS PROJECT WORK.

S.P. 179-020-031 S.P. 019-605-028 **SHEET 1 OF 7**

STAGING PLANS - STAGE 5A

DRAWN BY: GLJ	CHECKED BY: HS	CERTIFIED BY [signature] LICENSED PROFESSIONAL ENGINEER	LIC. NO. 18520 DATE 6/18/12	STATE PROJ. NO. 1901-148 (T.H. 13)	SHEET NO. 177 OF 442 SHEETS

PLOTTED/REVISED: 13-JUN-2012 11:50

DISTRICT #: METRO
IPLOT NAME: d1901148_STG5A_01
PATH & FILENAME: Projects/DM_ROS/013/1901/148/Design/PlanSheets/Staging/Stage 5A/d1901148_STG5A_01.dgn

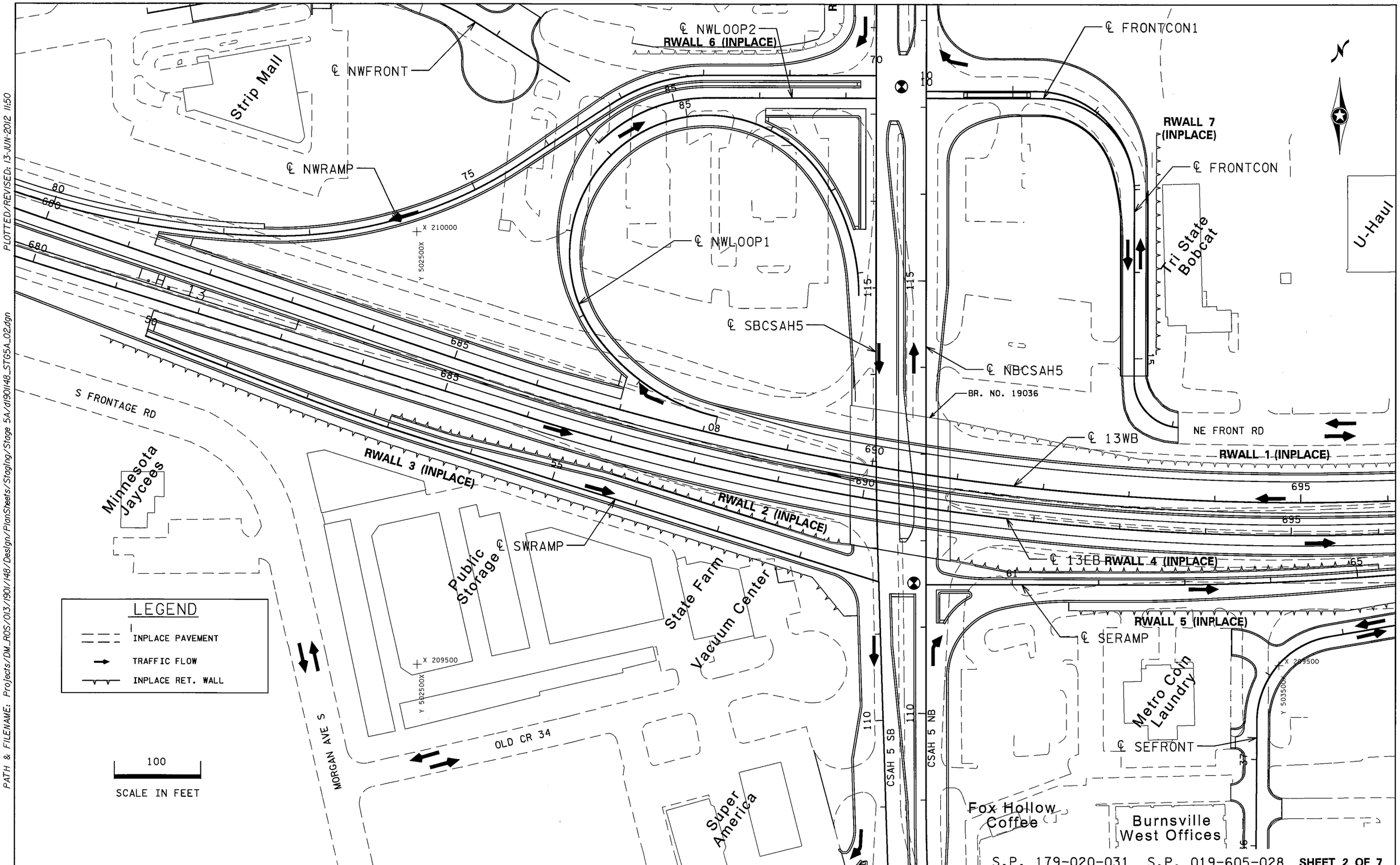

S.P. 179-020-031 S.P. 019-605-028 **SHEET 2 OF 7**

STAGING PLANS – STAGE 5A

DRAWN BY: GLJ	CHECKED BY: HS	CERTIFIED BY LICENSED PROFESSIONAL ENGINEER LIC. NO. 20534 DATE 6/18/12	STATE PROJ. NO. 1901-148 (T.H. 13)	SHEET NO. 178 OF 442 SHEETS

DISTRICT #: METRO
IPLOT NAME: d1901148_STG5A_02
PATH & FILENAME: Projects/DM_ROS/013/1901/148/Design/PlanSheets/Staging/Stage 5A/d1901148_STG5A_02.dgn
PLOTTED/REVISED: 13-JUN-2012 11:50

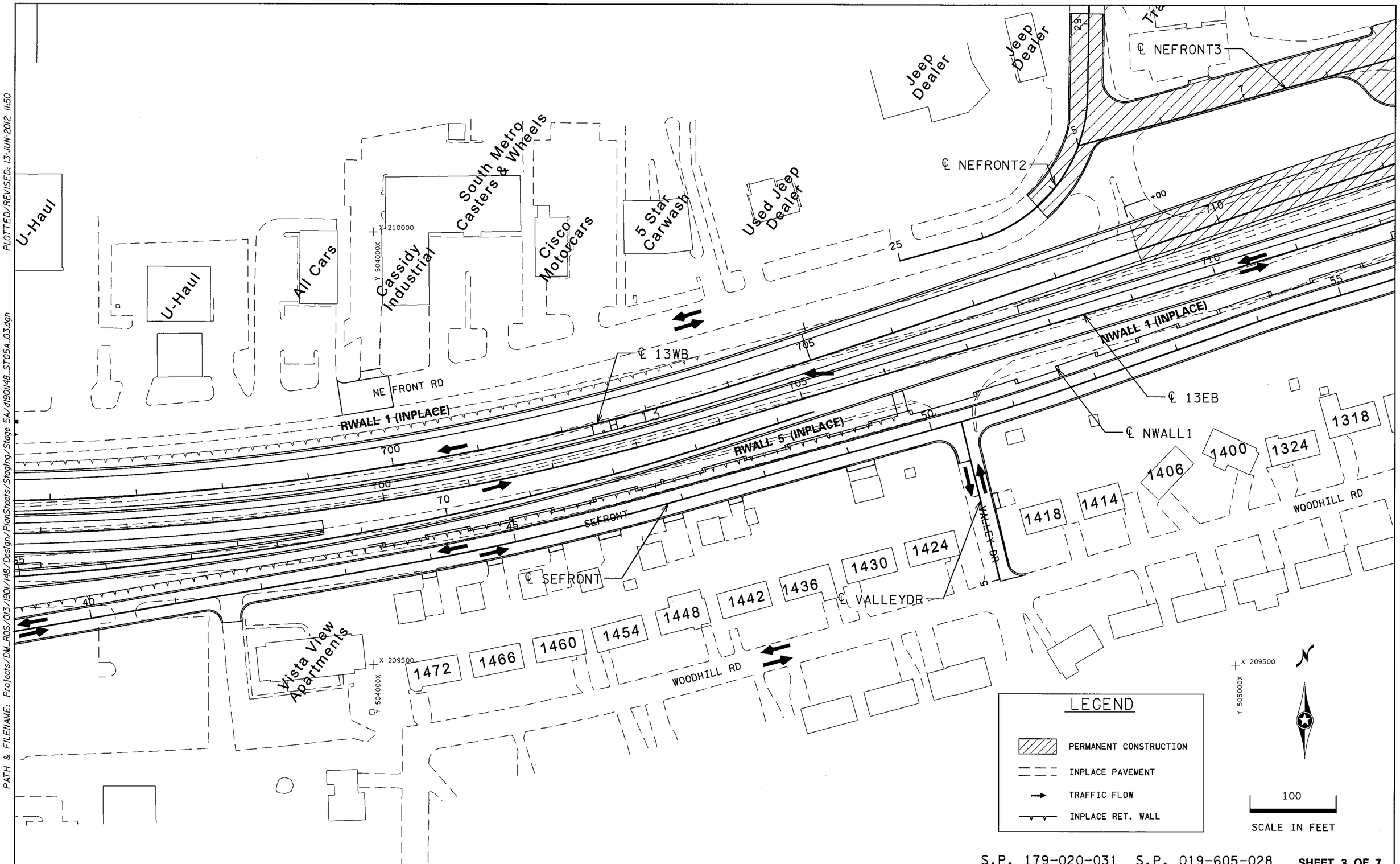

S.P. 179-020-031 S.P. 019-605-028 **SHEET 3 OF 7**

STAGING PLANS - STAGE 5A

DRAWN BY: GLJ	CHECKED BY: HS	CERTIFIED BY [signature] LICENSED PROFESSIONAL ENGINEER	LIC. NO. 18520 DATE 6/18/12	STATE PROJ. NO. 1901-148 (T.H. 13)	SHEET NO. 179 OF 442 SHEETS

PLOTTED/REVISED: 13-JUN-2012 11:50

DISTRICT #: METRO
IPLOT NAME: d1901148_STG5A_03
PATH & FILENAME: Projects/DM_ROS/013/1901/148/Design/PlanSheets/Staging/Stage 5A/d1901148_STG5A_03.dgn

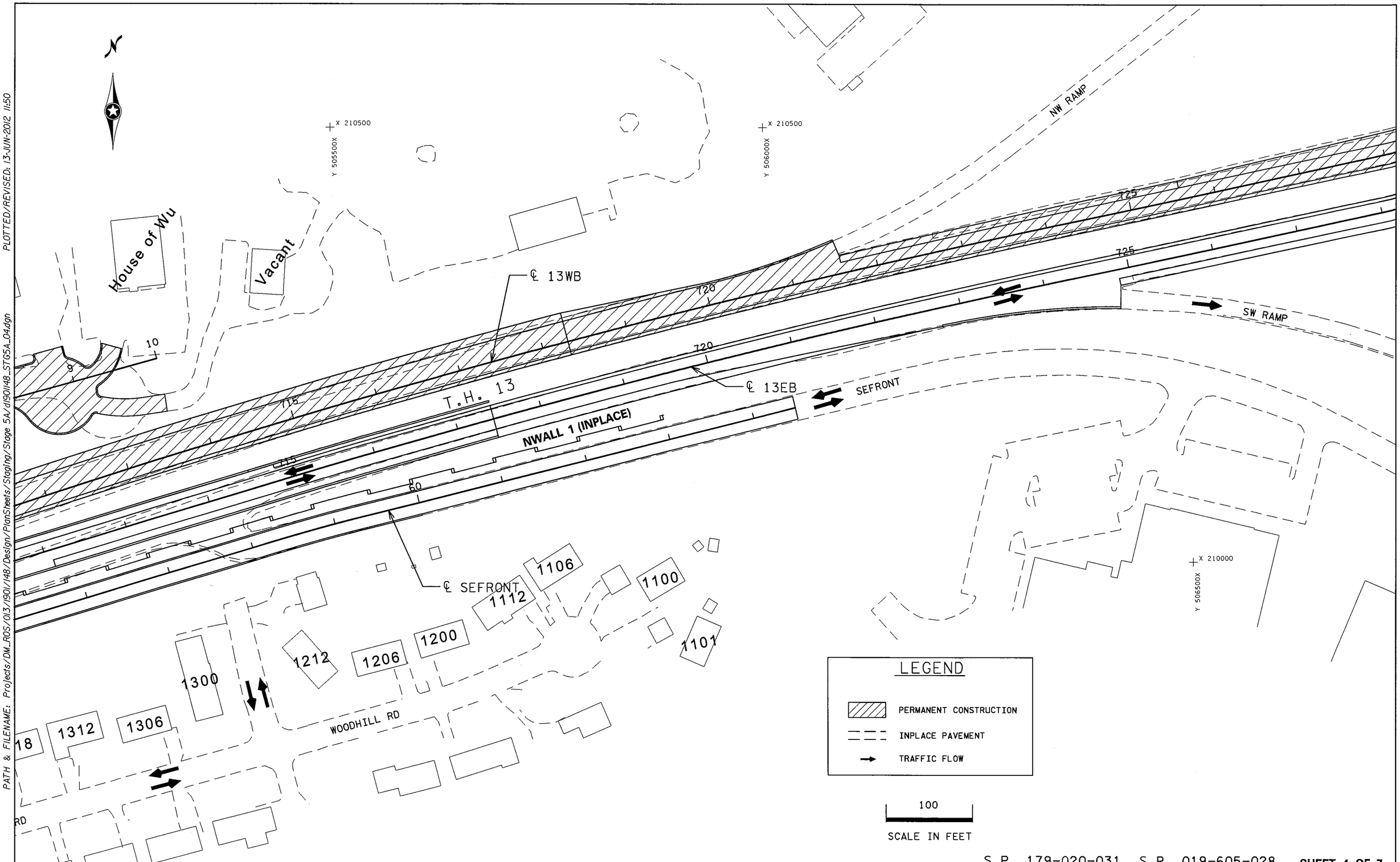

S.P. 179-020-031 S.P. 019-605-028 **SHEET 4 OF 7**

STAGING PLANS - STAGE 5A

DRAWN BY: GLJ	CHECKED BY: HS	CERTIFIED BY _____ LICENSED PROFESSIONAL ENGINEER	LIC. NO. 18520 DATE 6/18/12	STATE PROJ. NO. 1901-148 (T.H. 13) SHEET NO. 180 OF 442 SHEETS

DISTRICT #: METRO
IPLOT NAME: d190l148_ST65A_04
PATH & FILENAME: Projects/DM_ROS/013/190l/148/Design/PlanSheets/Staging/Stage 5A/d190l148_ST65A_04.dgn
PLOTTED/REVISED: 13-JUN-2012 11:50

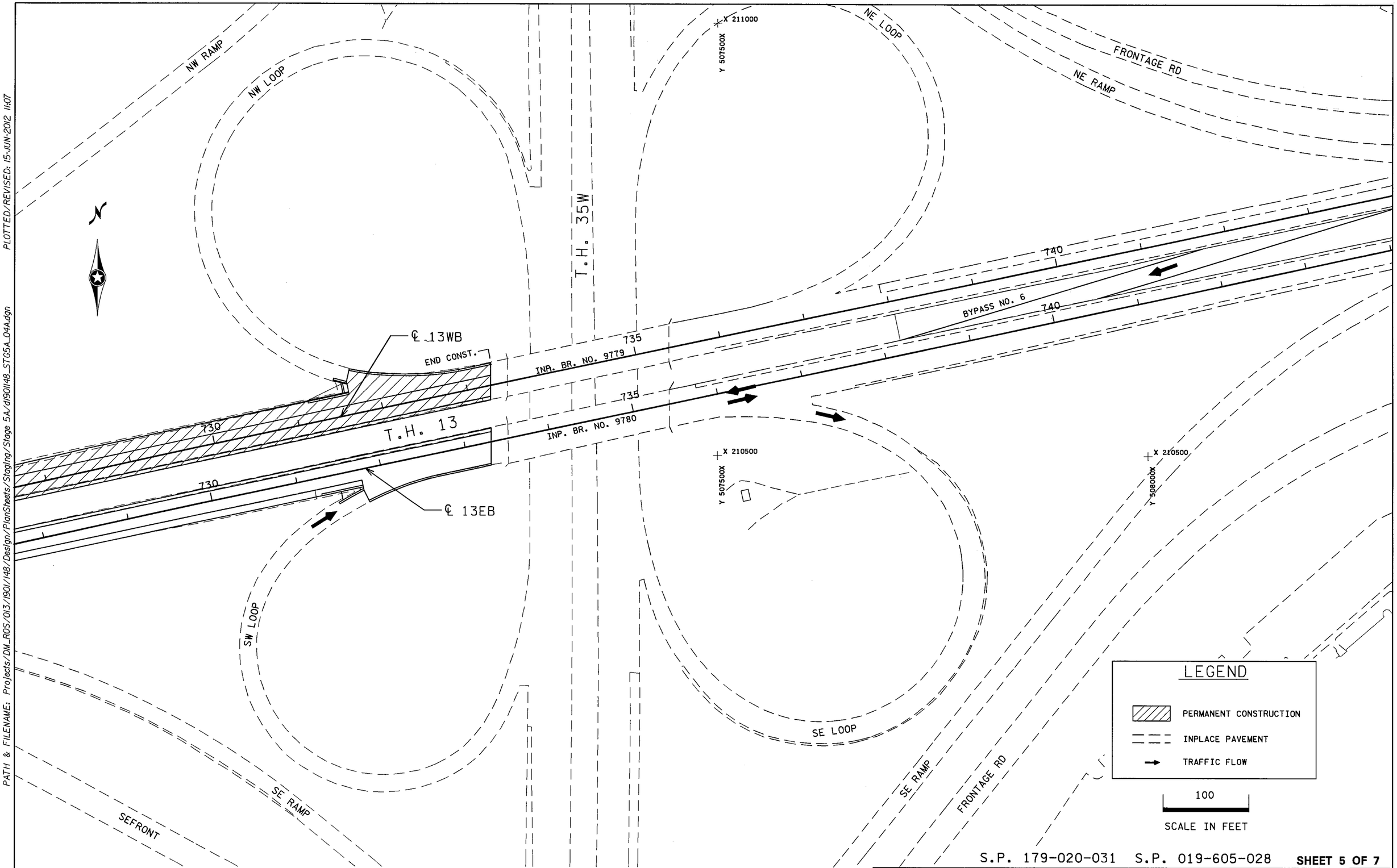

S.P. 179-020-031 S.P. 019-605-028 **SHEET 5 OF 7**

STAGING PLAN - STAGE 5A

DRAWN BY: GLJ	CHECKED BY: HS	CERTIFIED BY LICENSED PROFESSIONAL ENGINEER LIC. NO. 18520 DATE 6/18/12	STATE PROJ. NO. 1901-148 (T.H. 13) SHEET NO. 181 OF 442 SHEETS

DISTRICT #: METRO
IPLOT NAME: d1901148_STG5A_04A
PATH & FILENAME: Projects/DM_ROS/013/1901/148/Design/PlanSheets/Staging/Stage 5A/d1901148_STG5A_04A.dgn
PLOTTED/REVISED: 15-JUN-2012 11:07

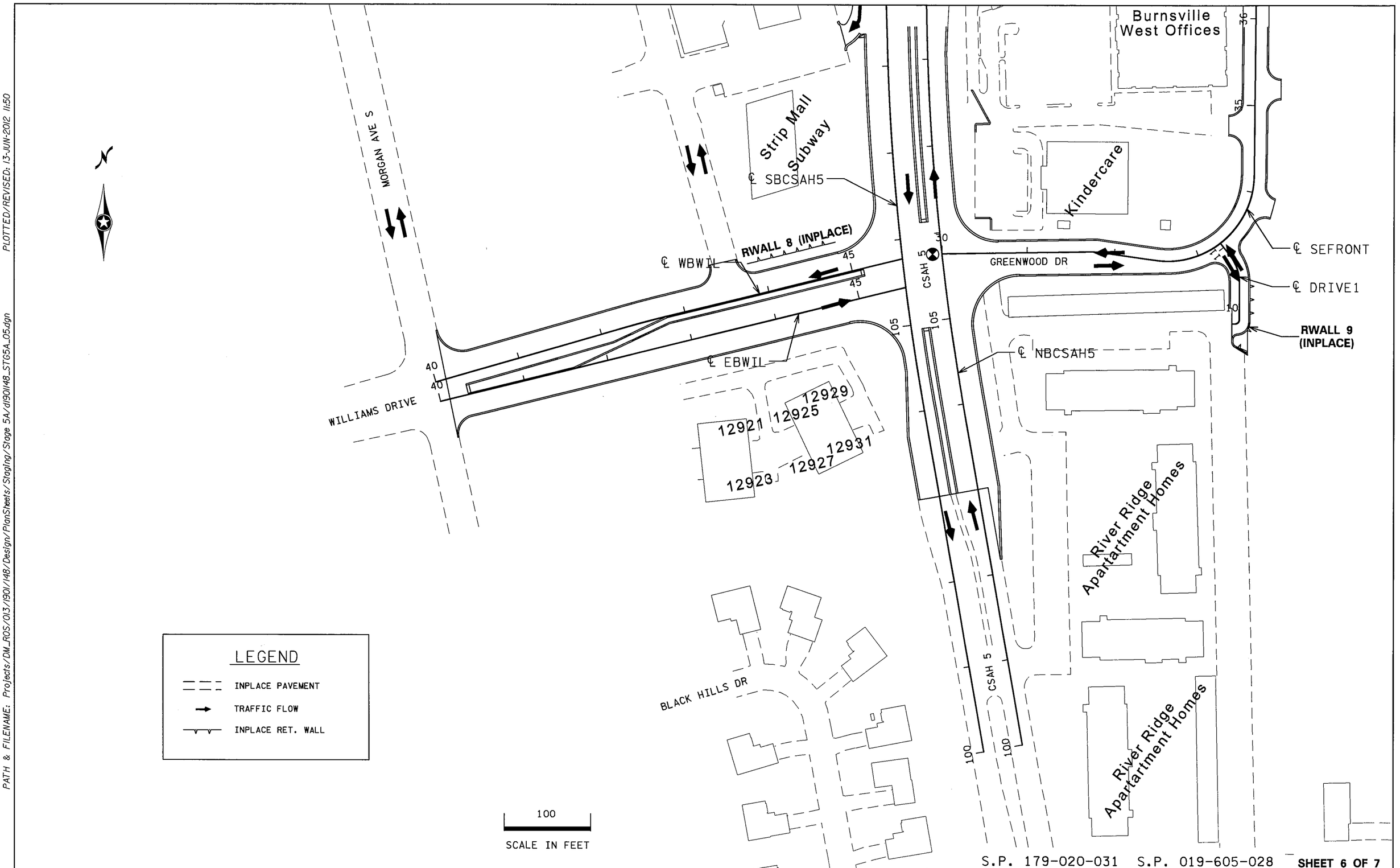

S.P. 179-020-031 S.P. 019-605-028 **SHEET 6 OF 7**

STAGING PLANS - STAGE 5A

DRAWN BY: GLJ	CHECKED BY: HS	CERTIFIED BY _____ LICENSED PROFESSIONAL ENGINEER LIC. NO. 18520 DATE 6/18/12	STATE PROJ. NO. 1901-148 (T.H. 13) SHEET NO. 182 OF 442 SHEETS

DISTRICT #: METRO
IPLOT NAME: d190148_ST65A_05
PATH & FILENAME: Projects/DM_ROS/013/1901/148/Design/PlanSheets/Staging/Stage 5A/d190148_ST65A_05.dgn
PLOTTED/REVISED: 13-JUN-2012 11:50

DISTRICT #: METRO
IPLOT NAME: d190148_STG5A_06
PATH & FILENAME: Projects/DM_ROS/013/1901/148/Design/PlanSheets/Staging/Stage 5A/d190148_STG5A_06.dgn
PLOTTED/REVISED: 13-JUN-2012 11:51

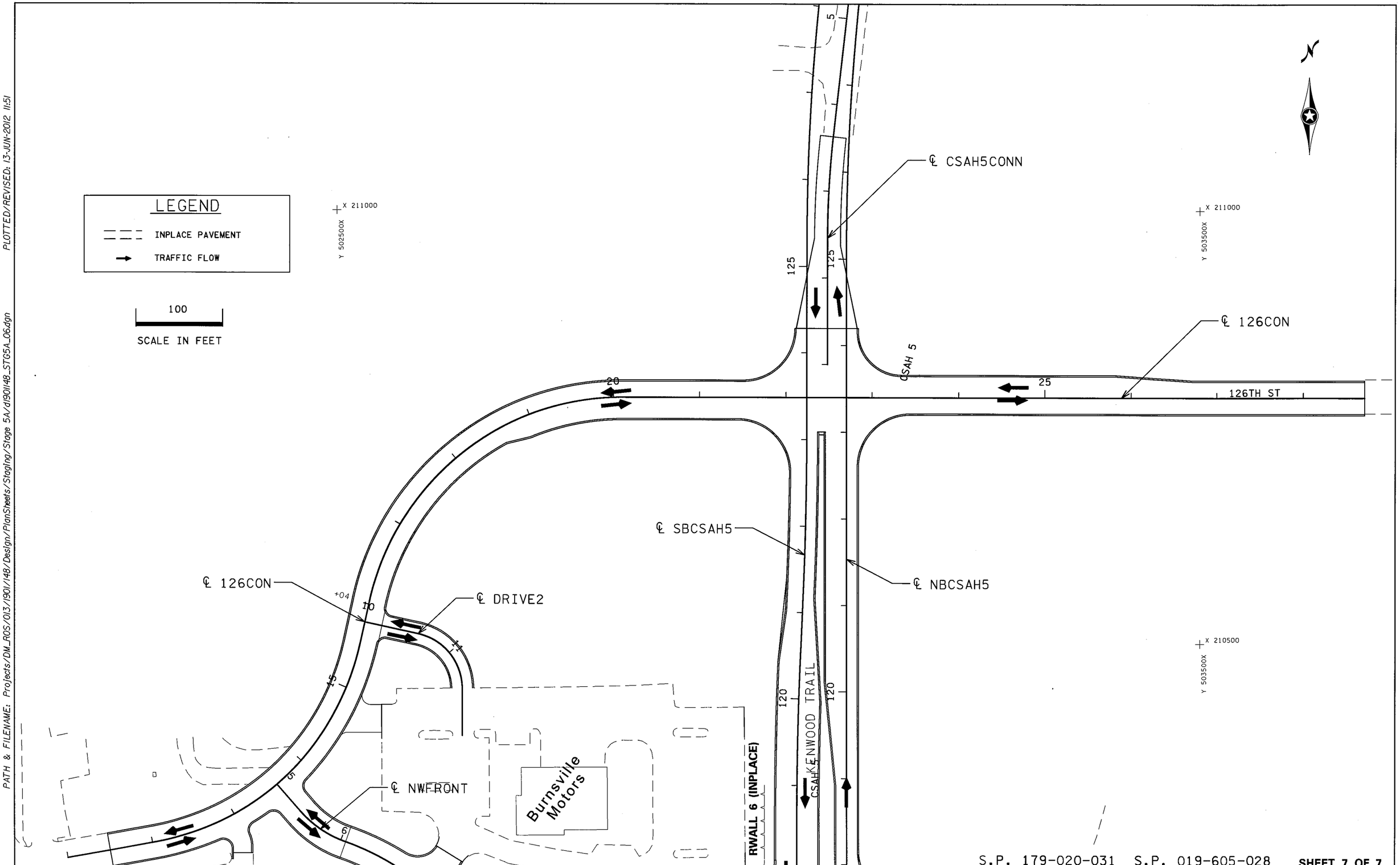

S.P. 179-020-031 S.P. 019-605-028 **SHEET 7 OF 7**

STAGING PLAN - STAGE 5A

DRAWN BY: GLJ	CHECKED BY: HS	CERTIFIED BY _____ LICENSED PROFESSIONAL ENGINEER LIC. NO. 18520 DATE 6/18/12	STATE PROJ. NO. 1901-148 (T.H. 13)	SHEET NO. 183 OF 442 SHEETS

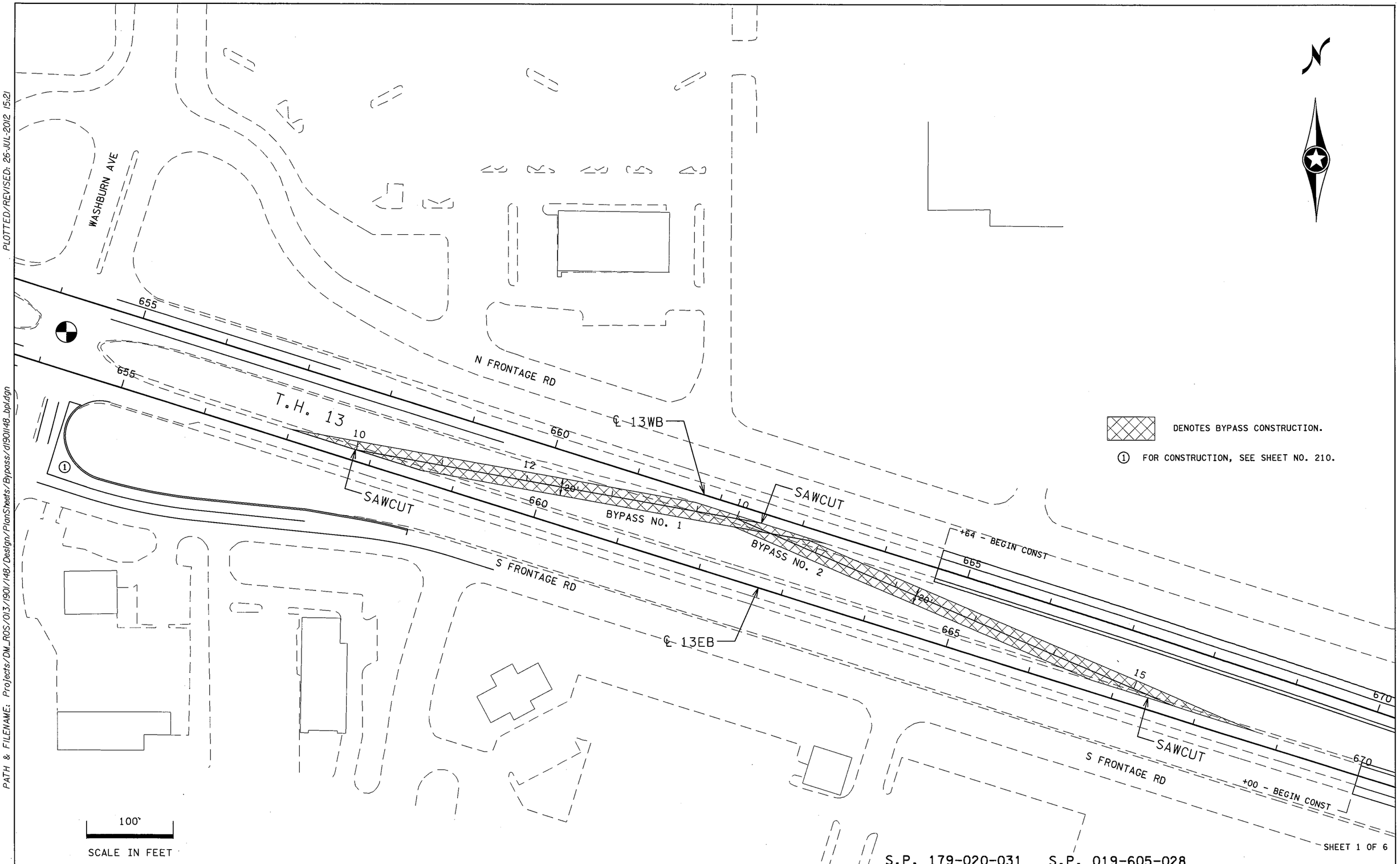

PLOTTED/REVISED: 26-JUL-2012 15:21

DISTRICT #: METRO
IPLOT NAME: d1901148_bpl
PATH & FILENAME: Projects/DM_ROS/013/1901/148/Design/PlanSheets/Bypass/d1901148_bpl.dgn

S.P. 179-020-031 S.P. 019-605-028

BYPASS PLANS – BYPASS 1, 2

DRAWN BY: GJ	CHECKED BY: HS	CERTIFIED BY [signature] LICENSED PROFESSIONAL ENGINEER	LIC. NO. 18520 DATE 7/26/12	STATE PROJ. NO. 1901-148 (T.H. 13) SHEET NO. 184 OF 442 SHEETS

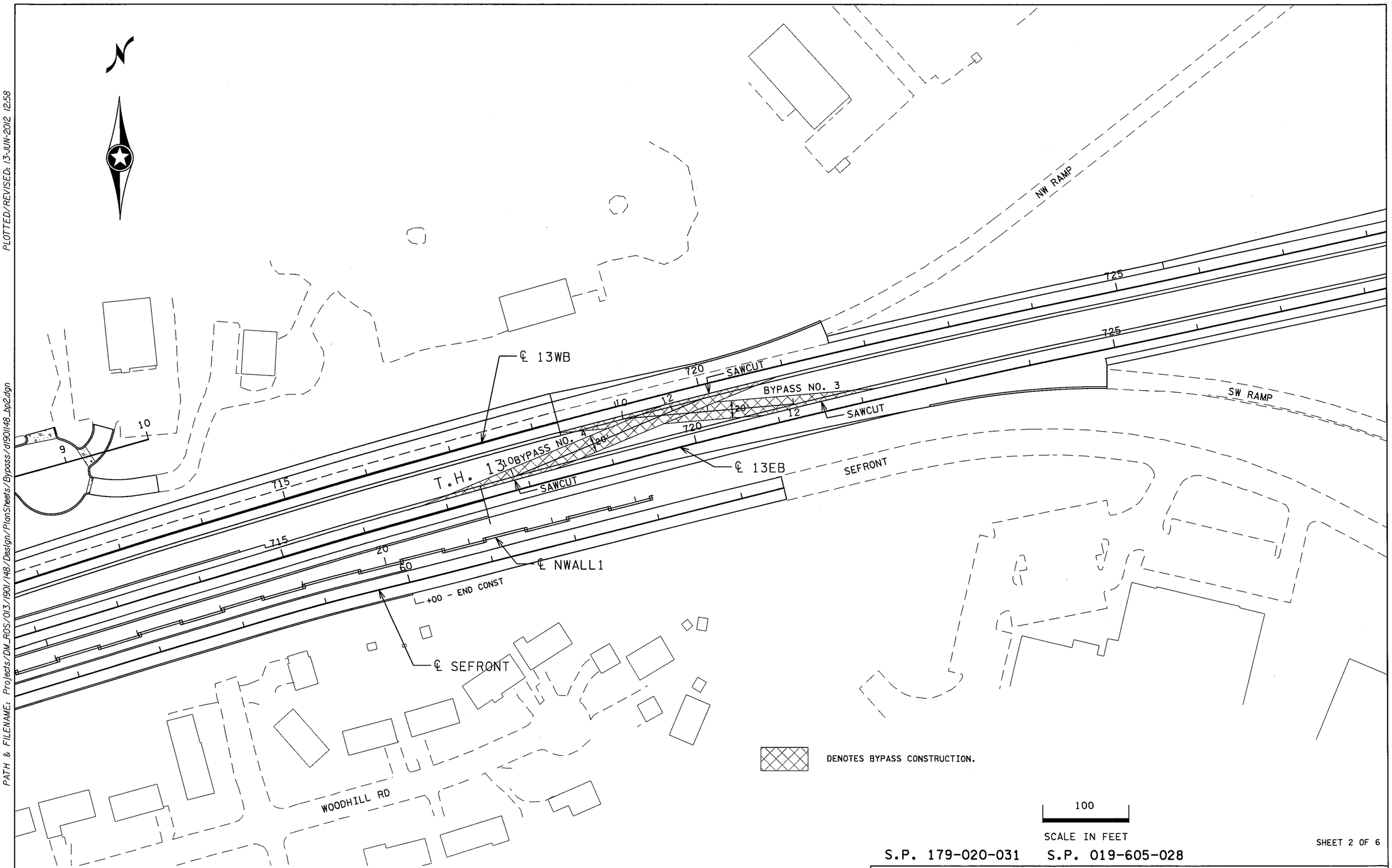

PLOTTED/REVISED: 13-JUN-2012 12:58

DISTRICT #: METRO
IPLOT NAME: d1901148_bp2
PATH & FILENAME: Projects/DM_ROS/013/1901/148/Design/PlanSheets/Bypass/d1901148_bp2.dgn

SHEET 2 OF 6

S.P. 179-020-031 S.P. 019-605-028

BYPASS PLANS - BYPASS 3, 4

DRAWN BY: GJ	CHECKED BY: HS	CERTIFIED BY [signature] LICENSED PROFESSIONAL ENGINEER	LIC. NO. 18520 DATE 6/18/12	STATE PROJ. NO. 1901-148 (T.H. 13) SHEET NO. 185 OF 442 SHEETS

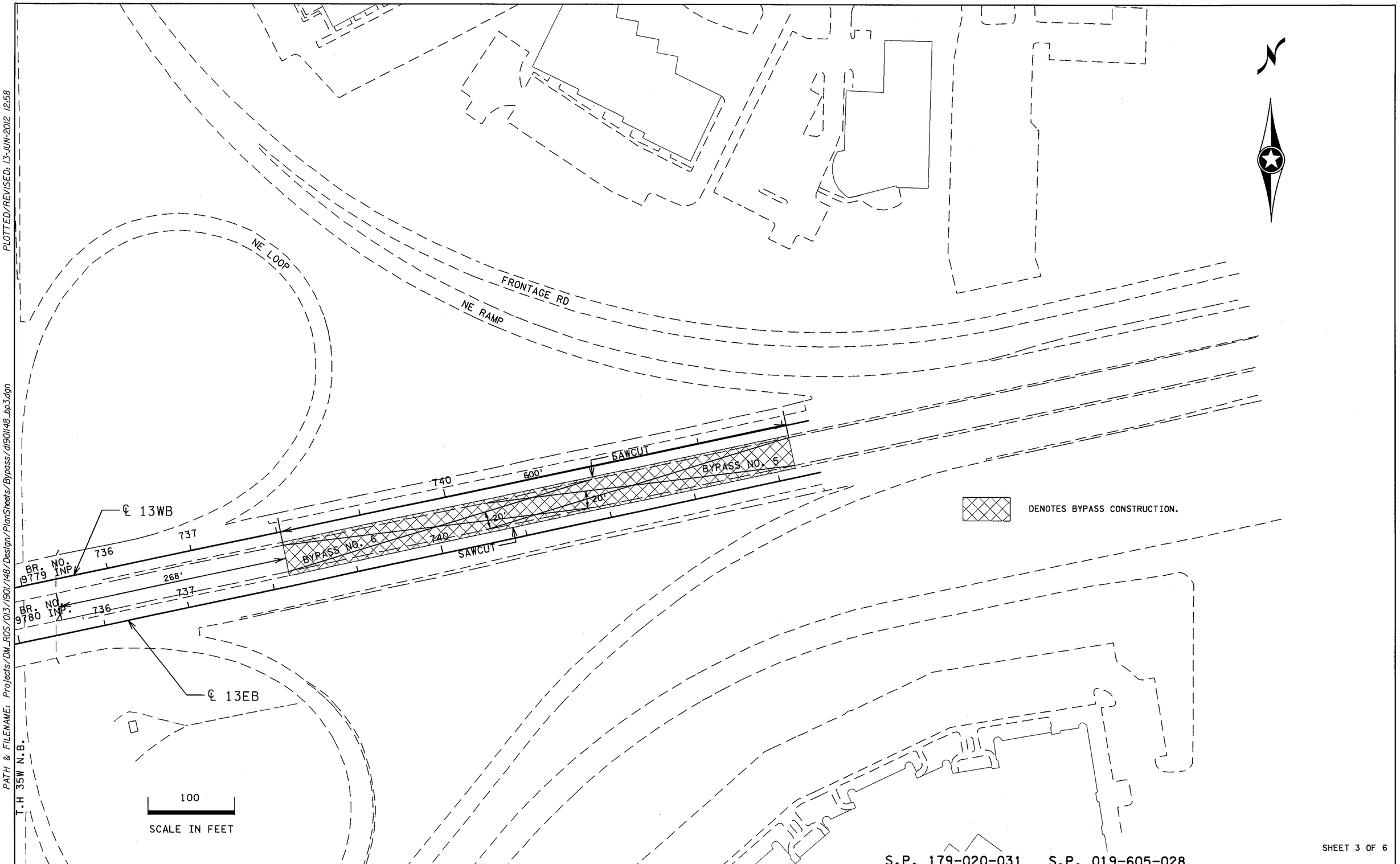

S.P. 179-020-031 S.P. 019-605-028

SHEET 3 OF 6

DISTRICT #: METRO
IPLOT NAME: d1901148_bp3
PATH & FILENAME: Projects/DM_ROS/013/1901/148/Design/PlanSheets/Bypass/d1901148_bp3.dgn
PLOTTED/REVISED: 13-JUN-2012 12:58

DRAWN BY: GJ	CHECKED BY: HS	CERTIFIED BY _____ LICENSED PROFESSIONAL ENGINEER LIC. NO. 18520 DATE 6/18/12	**BYPASS PLANS - BYPASS 5, 6**
			STATE PROJ. NO. 1901-148 (T.H. 13) SHEET NO. 186 OF 442 SHEETS

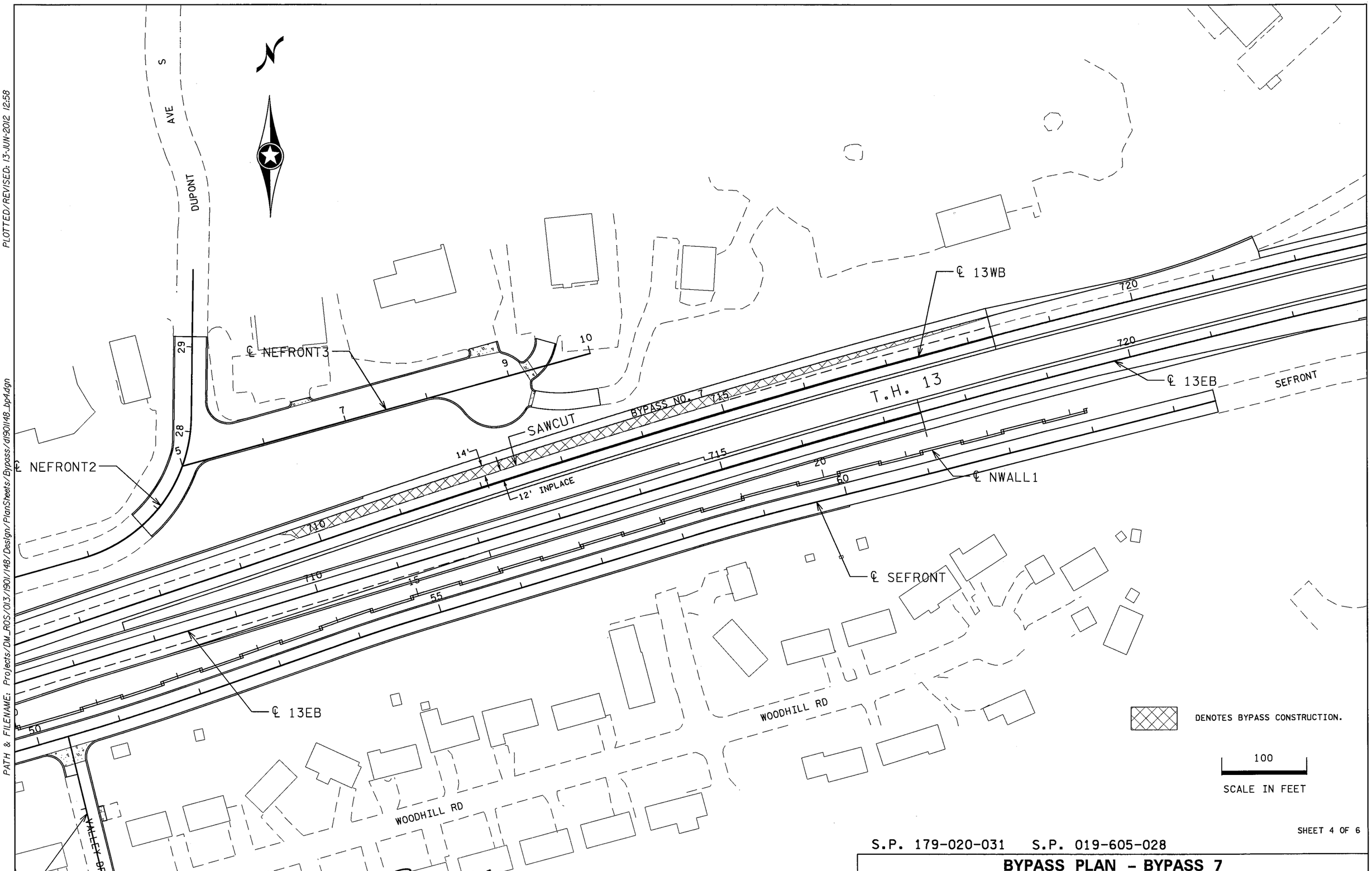

SHEET 4 OF 6

S.P. 179-020-031 S.P. 019-605-028

BYPASS PLAN - BYPASS 7

DRAWN BY: GJ	CHECKED BY: HS	CERTIFIED BY LICENSED PROFESSIONAL ENGINEER	LIC. NO. 18520 DATE 6/18/12	STATE PROJ. NO. 1901-148 (T.H. 13) SHEET NO. 187 OF 442 SHEETS

PLOTTED/REVISED: 13-JUN-2012 12:58

DISTRICT #: METRO
IPLOT NAME: d190l148_bp4
PATH & FILENAME: Projects/DM_ROS/013/1901/148/Design/PlanSheets/Bypass/d190l148_bp4.dgn

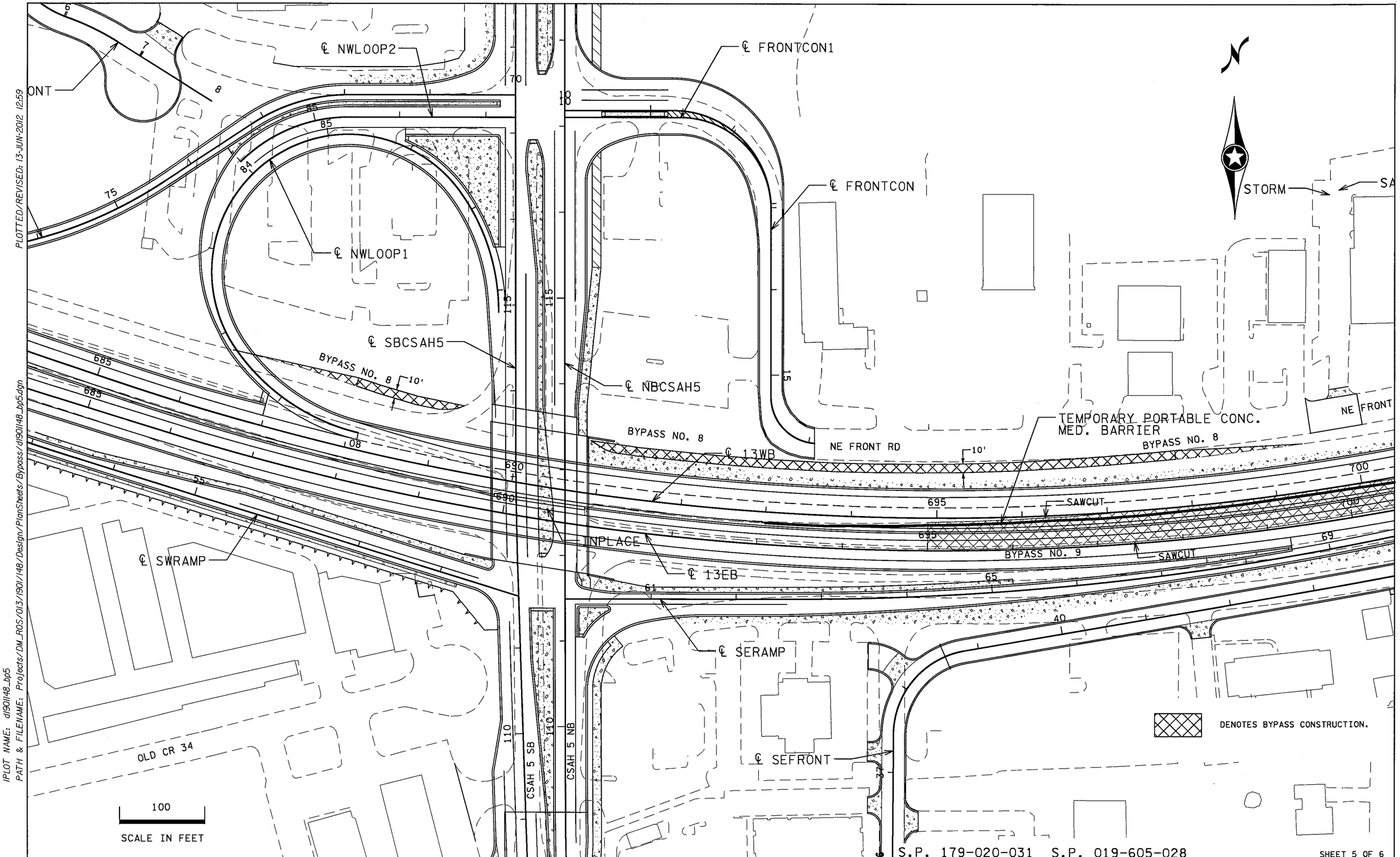

PLOTTED/REVISED: 13-JUN-2012 12:59

DISTRICT *: METRO
IPLOT NAME: d1901148_bp5
PATH & FILENAME: Projects/DM_ROS/013/1901/148/Design/PlanSheets/Bypass/d1901148_bp5.dgn

S.P. 179-020-031 S.P. 019-605-028

SHEET 5 OF 6

BYPASS PLANS – BYPASS 8,9

DRAWN BY: GJ	CHECKED BY: HS	CERTIFIED BY LICENSED PROFESSIONAL ENGINEER	LIC. NO. 18520 DATE 6/18/12	STATE PROJ. NO. 1901-148 (T.H. 13) SHEET NO. 188 OF 442 SHEETS

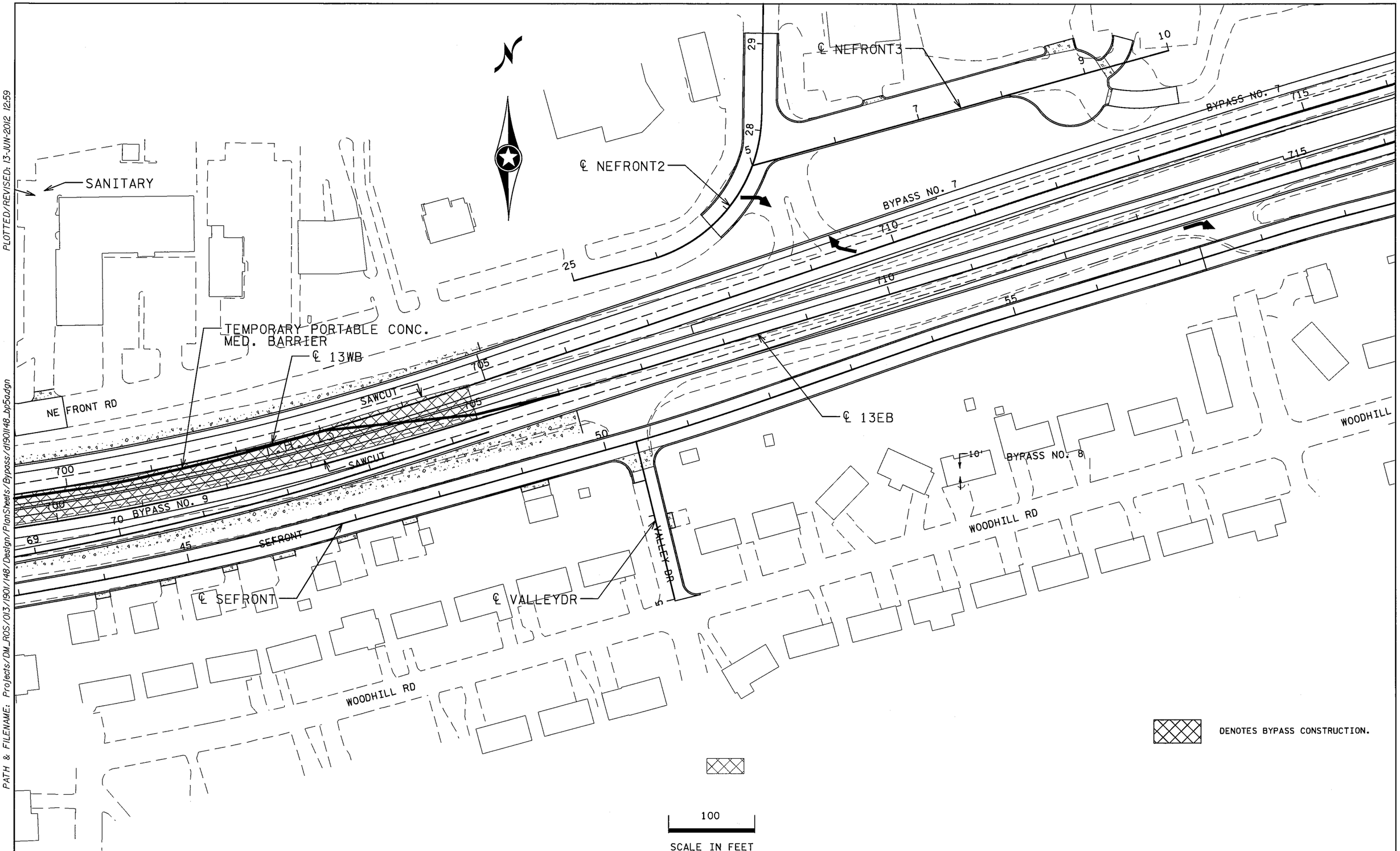

S.P. 179-020-031 S.P. 019-605-028

SHEET 6 OF 6

BYPASS PLANS - BYPASS 9

DRAWN BY: GJ	CHECKED BY: HS	CERTIFIED BY _____ LICENSED PROFESSIONAL ENGINEER	LIC. NO. 18520 DATE 6/18/12	STATE PROJ. NO. 1901-148 (T.H. 13) SHEET NO. 189 OF 442 SHEETS

PLOTTED/REVISED: 13-JUN-2012 12:59

DISTRICT #: METRO
IPLOT NAME: d190l148_bp5a
PATH & FILENAME: Projects/DM_ROS/013/1901/148/Design/PlanSheets/Bypass/d190l148_bp5a.dgn

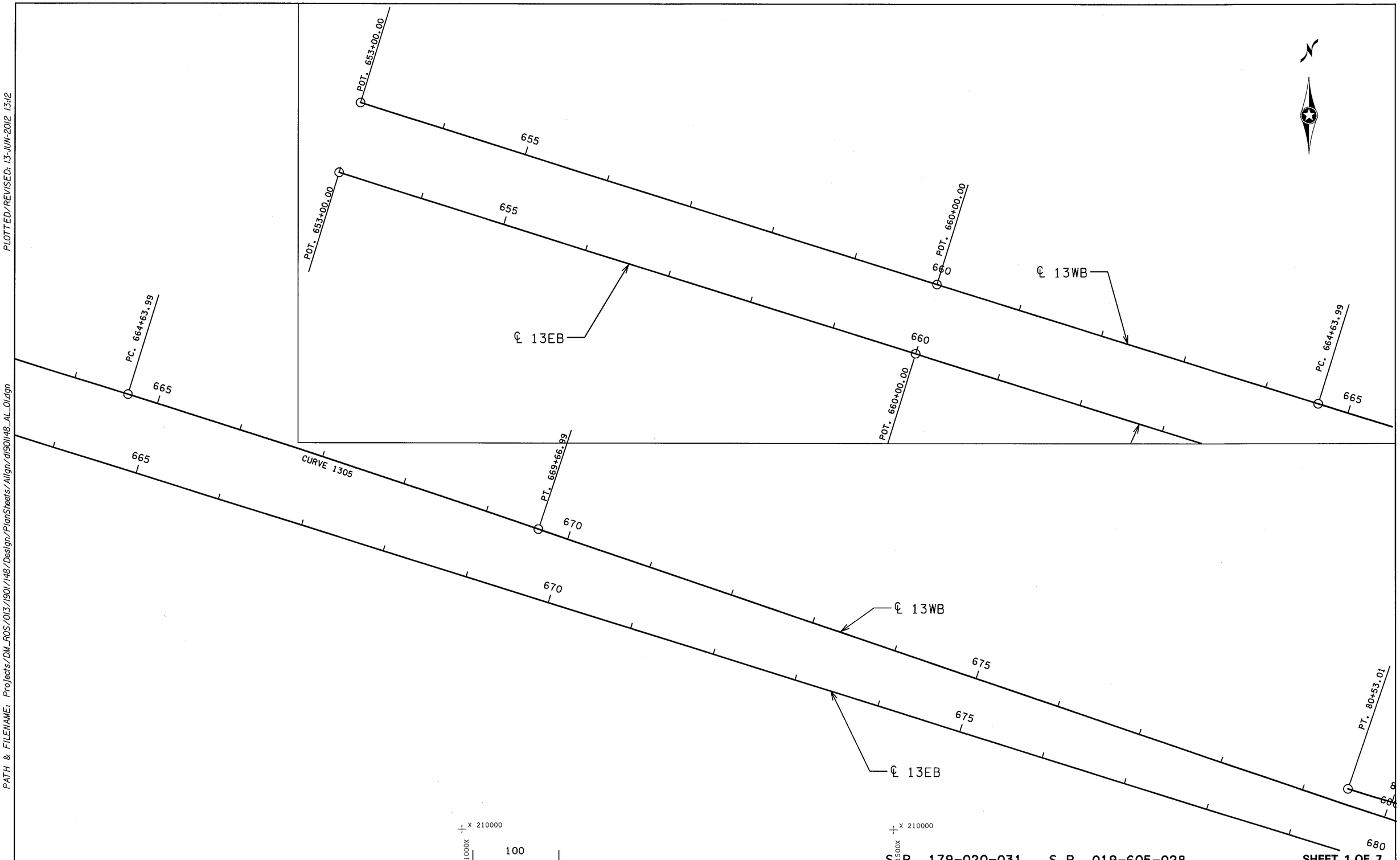

S.P. 179-020-031 S.P. 019-605-028

SHEET 1 OF 7

ALIGNMENT PLAN

DRAWN BY: GLJ	CHECKED BY: HS	CERTIFIED BY [signature] LICENSED PROFESSIONAL ENGINEER	LIC. NO. 18520 DATE 6/18/12	STATE PROJ. NO. 1901-148 (T.H. 13) SHEET NO. 190 OF 442 SHEETS

DISTRICT #: METRO
IPLOT NAME: d1901148_AL_01
PATH & FILENAME: Projects/DM_ROS/013/1901/148/Design/PlanSheets/Align/d1901148_AL_01.dgn
PLOTTED/REVISED: 13-JUN-2012 13:12

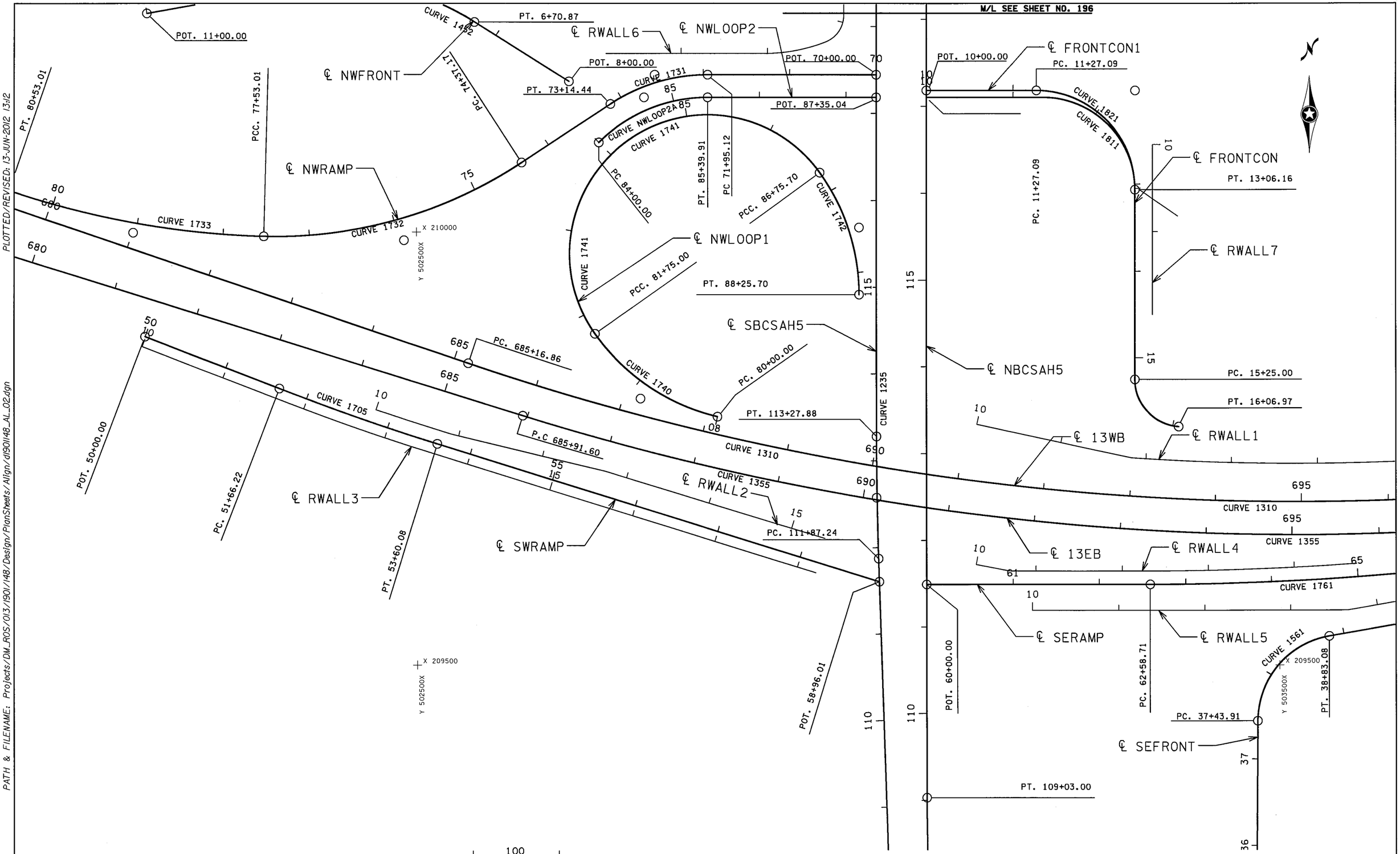

M/L SEE SHEET NO. 195

S.P. 179-020-031 S.P. 019-605-028

SHEET 2 OF 7

ALIGNMENT PLAN

DRAWN BY: GLJ	CHECKED BY: HS	CERTIFIED BY LICENSED PROFESSIONAL ENGINEER LIC. NO. 18520 DATE 6/18/12	STATE PROJ. NO. 1901-148 (T.H. 13)	SHEET NO. 191 OF 442 SHEETS

DISTRICT #: METRO
IPLOT NAME: d190148_AL_02
PATH & FILENAME: Projects/DM_ROS/013/1901/148/Design/PlanSheets/Align/d190148_AL_02.dgn
PLOTTED/REVISED: 13-JUN-2012 13:12

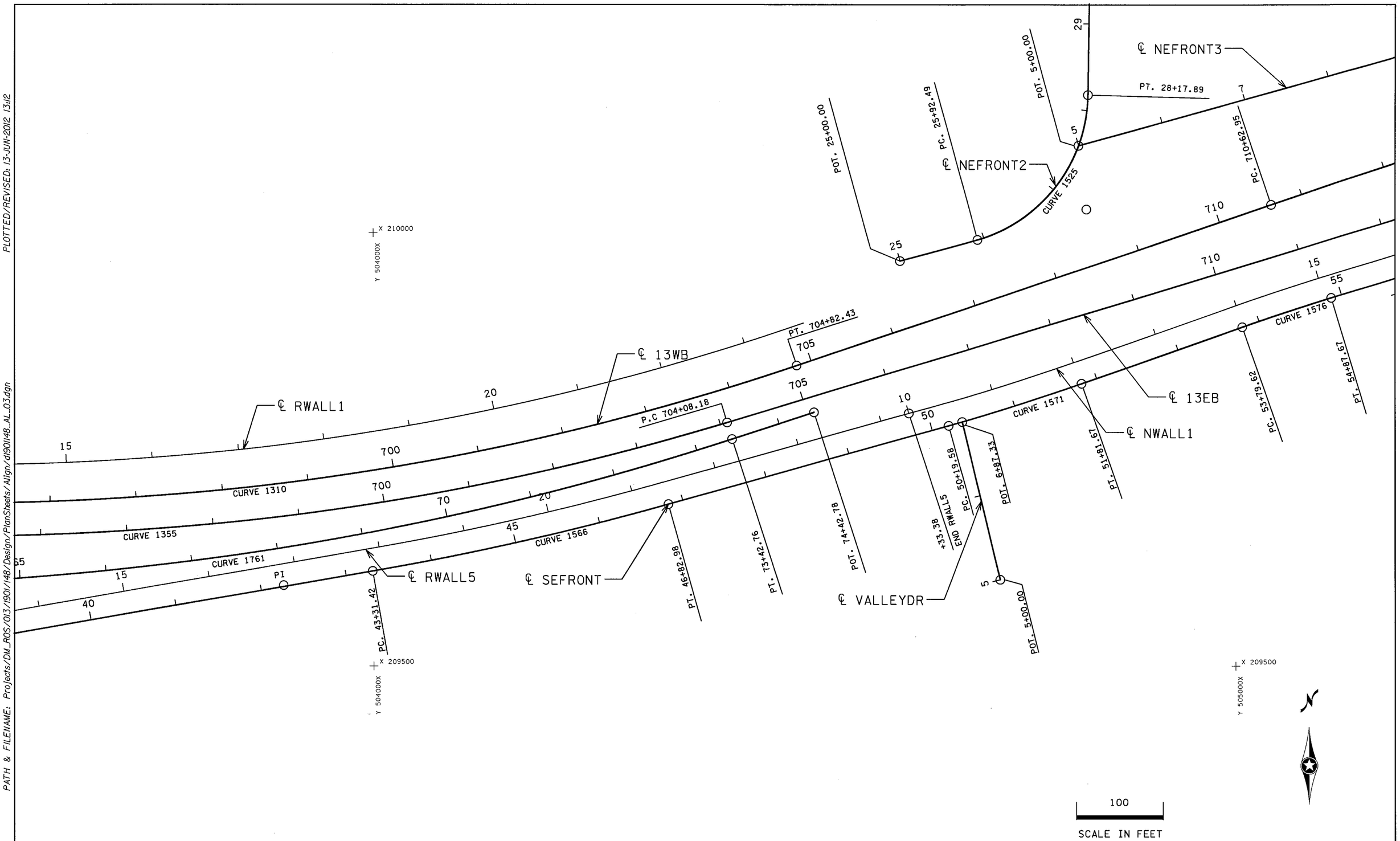

PLOTTED/REVISED: 13-JUN-2012 13:12

DISTRICT #: METRO
IPLOT NAME: d190l148_AL_03
PATH & FILENAME: Projects/DM_ROS/013/190l/148/Design/PlanSheets/Align/d190l148_AL_03.dgn

S.P. 179-020-031 S.P. 019-605-028 **SHEET 3 OF 7**

ALIGNMENT PLAN

DRAWN BY: GLJ	CHECKED BY: HS	CERTIFIED BY _____ LICENSED PROFESSIONAL ENGINEER LIC. NO. 18520 DATE 6/18/12	STATE PROJ. NO. 1901-148 (T.H. 13) SHEET NO. 192 OF 442 SHEETS

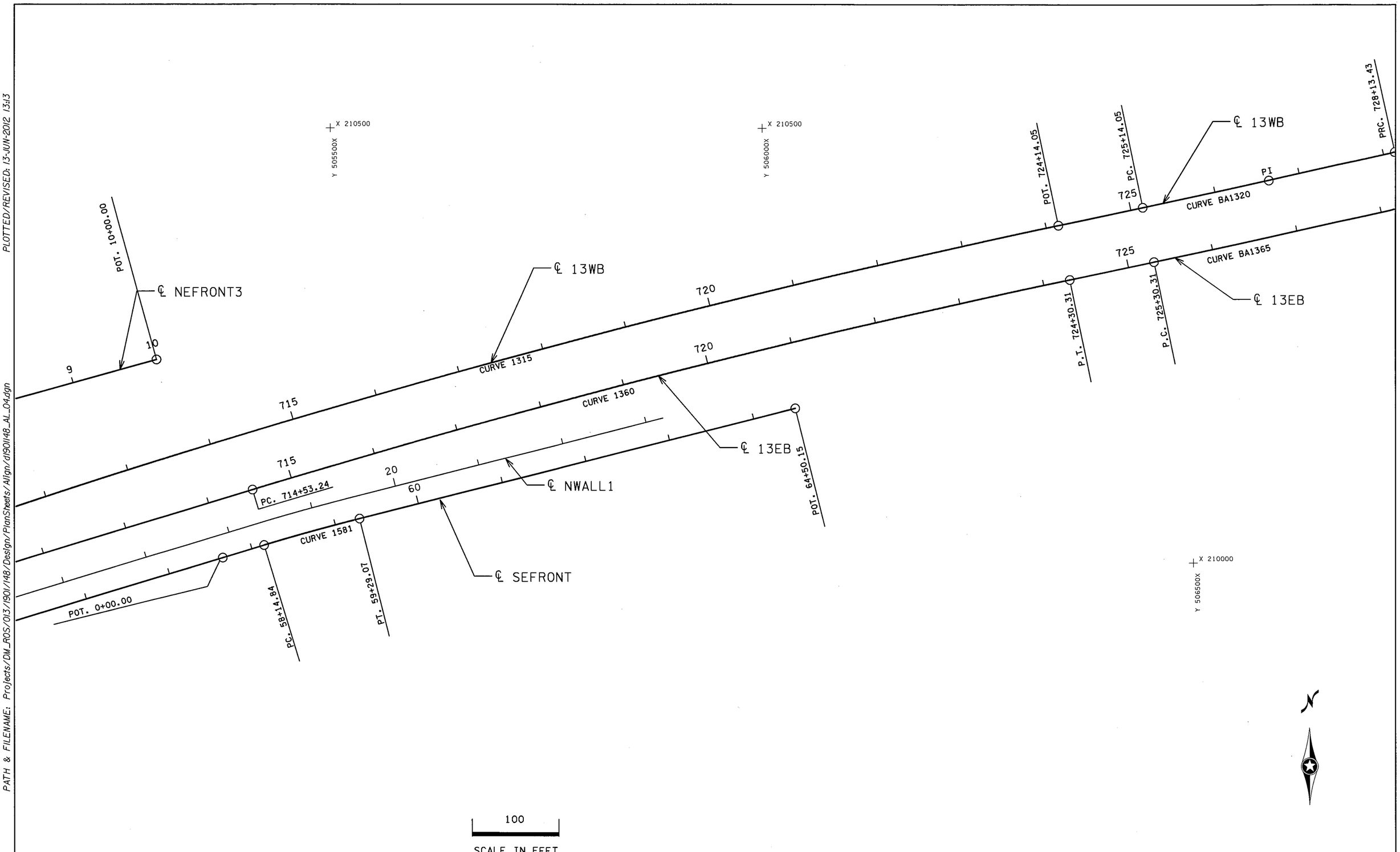

S.P. 179-020-031 S.P. 019-605-028

SHEET 4 OF 7

ALIGNMENT PLAN

DRAWN BY: GLJ	CHECKED BY: HS	CERTIFIED BY [signature] LICENSED PROFESSIONAL ENGINEER LIC. NO. 18520 DATE 6/18/12	STATE PROJ. NO. 1901-148 (T.H. 13) SHEET NO. 193 OF 442 SHEETS

PLOTTED/REVISED: 13-JUN-2012 13:13

DISTRICT #: METRO
IPLOT NAME: d1901148_AL_04
PATH & FILENAME: Projects/DM_ROS/013/1901/148/Design/PlanSheets/Align/d1901148_AL_04.dgn

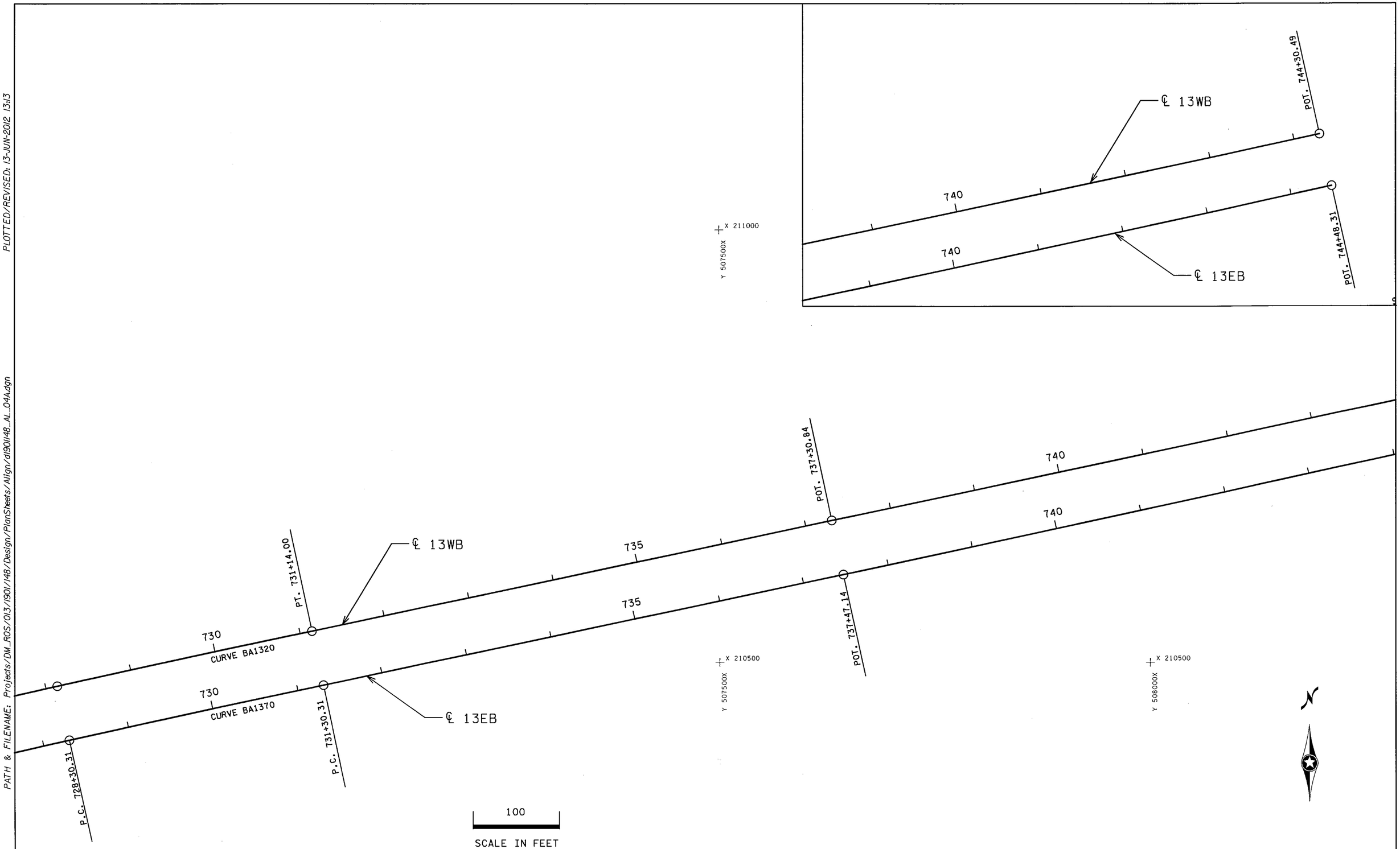

S.P. 179-020-031 S.P. 019-605-028 SHEET 5 OF 7

ALIGNMENT PLAN

DRAWN BY: GLJ	CHECKED BY: HS	CERTIFIED BY LICENSED PROFESSIONAL ENGINEER LIC. NO. 18520 DATE 6/18/12	STATE PROJ. NO. 1901-148 (T.H. 13) SHEET NO. 194 OF 442 SHEETS

DISTRICT #: METRO
IPLOT NAME: d1901148_AL_04A
PATH & FILENAME: Projects/DM_ROS/013/1901/148/Design/PlanSheets/Align/d1901148_AL_04A.dgn
PLOTTED/REVISED: 13-JUN-2012 13:13

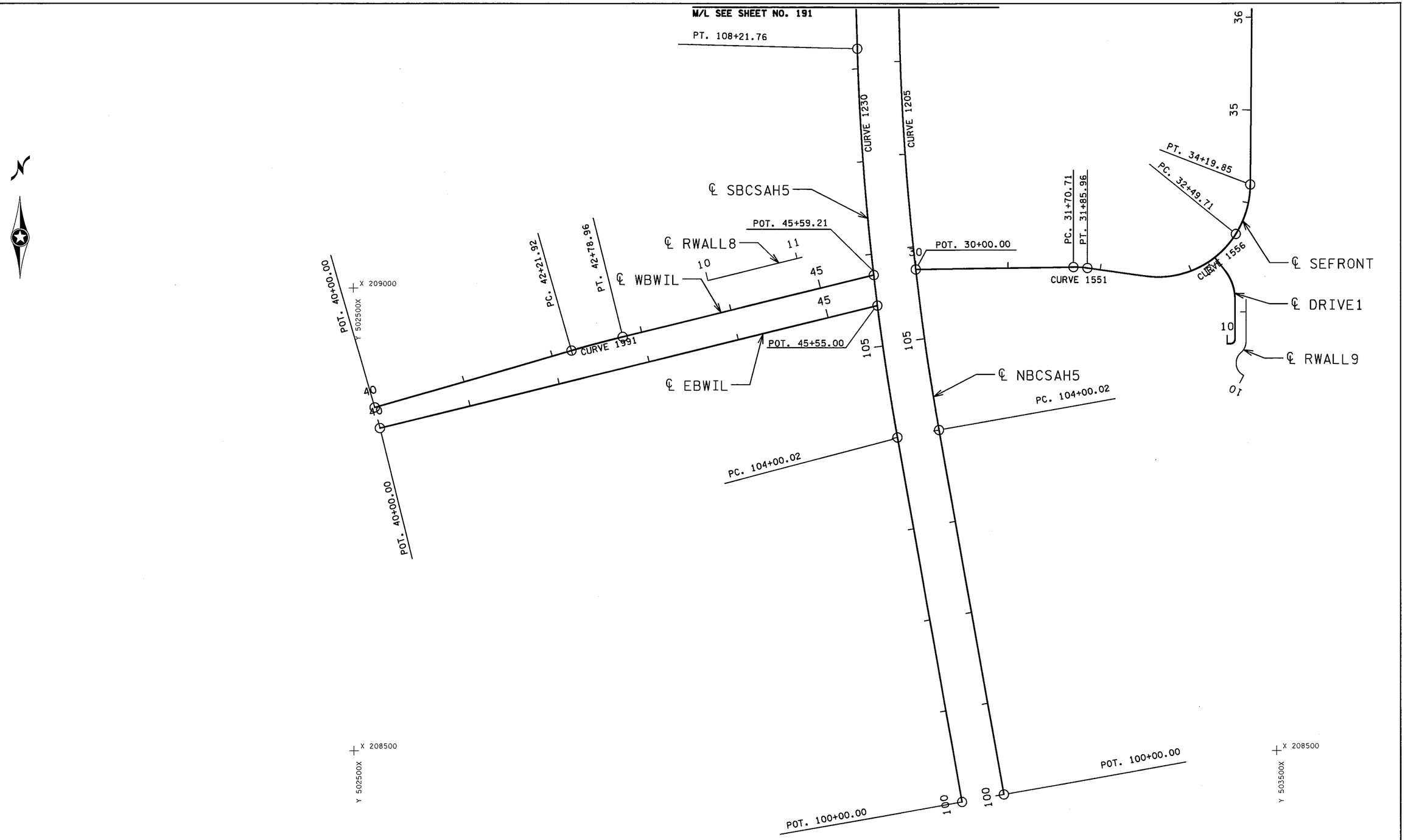

S.P. 179-020-031 S.P. 019-605-028

SHEET 6 OF 7

ALIGNMENT PLAN

DRAWN BY: GLJ	CHECKED BY: HS	CERTIFIED BY LICENSED PROFESSIONAL ENGINEER	LIC. NO. 18520 DATE 6/18/12	STATE PROJ. NO. 1901-148 (T.H. 13)	SHEET NO. 195 OF 442 SHEETS

DISTRICT #: METRO
IPLOT NAME: d1901148_AL_05
PATH & FILENAME: Projects/DM_ROS/013/1901/148/Design/PlanSheets/Align/d1901148_AL_05.dgn
PLOTTED/REVISED: 13-JUN-2012 13:13

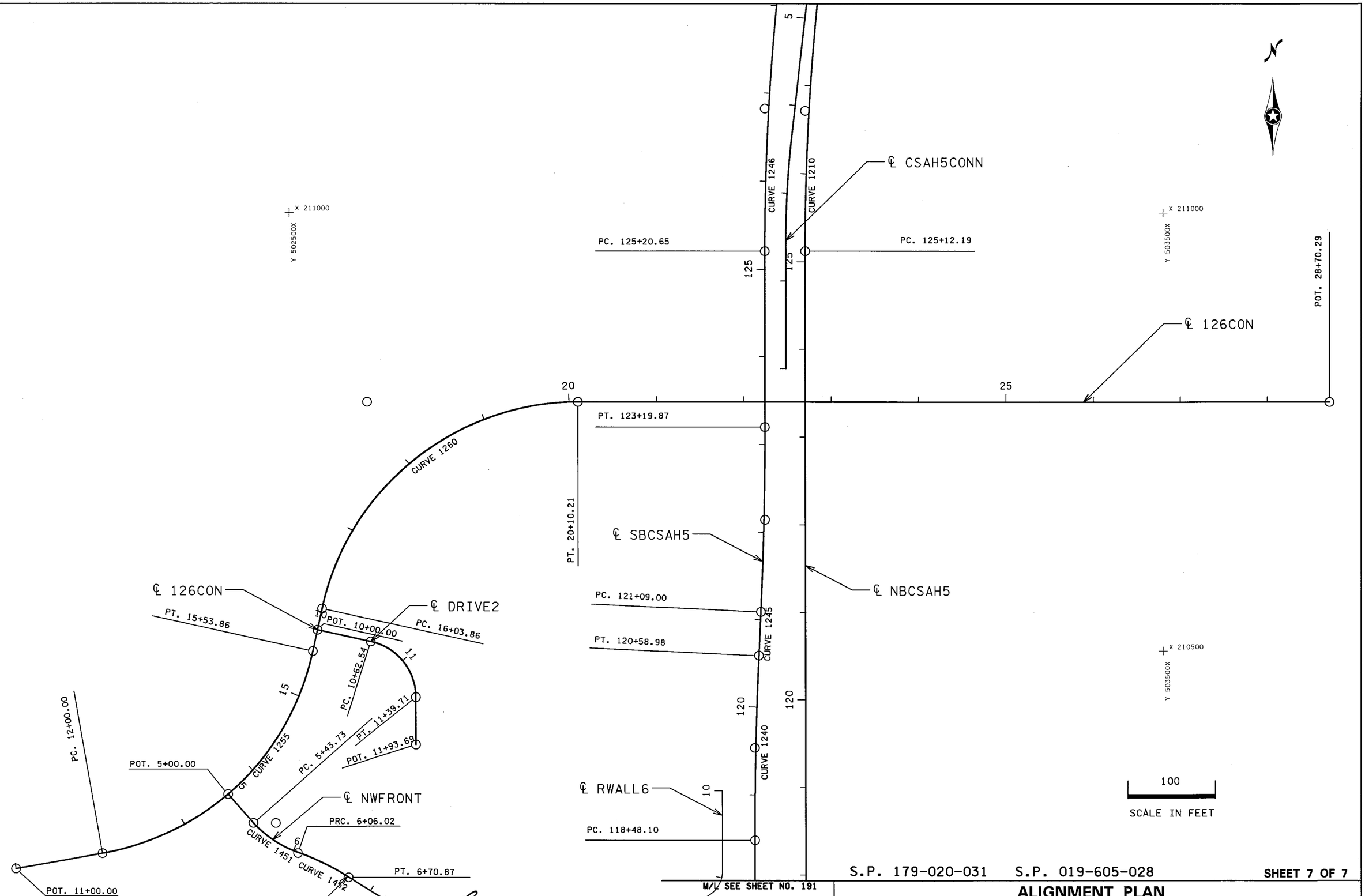

S.P. 179-020-031 S.P. 019-605-028 SHEET 7 OF 7

ALIGNMENT PLAN

DRAWN BY: GLJ	CHECKED BY: HS	CERTIFIED BY LICENSED PROFESSIONAL ENGINEER	LIC. NO. 18520 DATE 6/18/12	STATE PROJ. NO. 1901-148 (T.H. 13) SHEET NO. 196 OF 442 SHEETS

DISTRICT #: METRO
IPLOT NAME: d1901148_AL_06
PATH & FILENAME: Projects/DM_ROS/013/1901/148/Design/PlanSheets/Align/d1901148_AL_06.dgn
PLOTTED/REVISED: 13-JUN-2012 13:13

PLOTTED/REVISED: 13-JUN-2012 13:24
DISTRICT #: METRO
IPLOT NAME: d190ll48_all_tab
PATH & FILENAME: Projects/DM_ROS/013/1901/148/Design/PlanSheets/Align/d190ll48_all_tab.dgn

ALIGNMENT TABULATION

POINT NUMBER	POINT	STATION	CIRCULAR CURVE DATA DELTA	DEGREE	RADIUS	TANGENT	LENGTH	COORDINATES X	Y	AZIMUTH
T.H. 13 E.B. (13EB)										
1345	POT	653+00.000						499,477.1964	210,767.8283	
1350	POT	660+00.000						500,145.5116	210,559.6099	
	PC	685+91.601						502,619.8057	209,788.7258	S 72° 41' 42.73" E
1355	PI	695+27.729	34° 07' 31.34" LT	1° 52' 42.78"	3,050.000'	936.129'	1,816.580'	503,513.5614	209,510.2698	PI
	CC							503,527.0429	212,700.6702	
	PT	704+08.181						504,409.6384	209,781.1625	N 73° 10' 45.93" E
	PC	714+53.247						505,409.9914	210,083.5789	N 73° 10' 45.93" E
1360	PI	719+42.074	4° 53' 07.11" RT	0° 30' 00.00"	11,459.156'	488.827'	977.062'	505,877.9043	210,225.0335	PI
	CC							508,725.9911	199,114.6957	
	PT	724+30.308						506,356.1638	210,326.1261	N 78° 03' 53.04" E
BA1361	POT	724+30.308						506,356.1638	210,326.1261	
	PC	725+30.308						506,454.0020	210,346.8067	78° 03' 53.03"
BA1365	PI	726+80.308	0° 33' 22.66" LT	0° 11' 07.56"	30,898.434'	150.000'	299.998'	506,600.7593	210,377.8277	PI
	CC							500,064.0055	240,577.2739	
	PRC	728+30.306						506,747.2084	210,410.2721	77° 30' 30.37"
	PRC	728+30.306						506,747.2084	210,410.2721	77° 30' 30.37"
BA1370	PI	729+80.306	0° 30' 39.73" RT	0° 10' 13.25"	33,634.899'	150.000'	299.998'	506,893.6576	210,442.7165	PI
	CC							514,022.2976	177,571.5824	
	PT	731+30.304						507,040.3904	210,473.8534	78° 01' 10.10"
BA1365	POT	737+47.142						507,643.7928	210,601.8962	
BA1366	POT	744+48.315						508,329.2447	210,749.5394	
T.H. 13 W.B. (13WB)										
A PT. 84.00' LT EB13 STA. 660.000 =										
1295	POT	653+00.000						499,502.1826	210,848.0261	
1300	POT	660+00.000						500,170.4978	210,639.8077	
	PC	664+64.000						500,613.4950	210,501.7887	107° 18' 17.27"
1305	PI	667+13.961	1° 25' 55.56" RT	0° 17' 11.32"	20,000.000'	249.962'	499.897'	500,852.1423	210,427.4364	PI
	CC							494,664.3985	191,407.0709	
	PT	669+63.897						501,088.8568	210,347.1430	108° 44' 12.83"
	PC	685+16.861						502,559.5195	209,848.2954	108° 44' 12.83"
1310	PI	695+36.077	37° 23' 24.42" LT	1° 54' 08.10"	3,012.000'	1,019.216'	1,965.573'	503,524.7209	209,520.8998	PI
	CC							503,527.0429	212,700.6702	
	PT	704+82.434						504,490.3995	209,846.8853	71° 20' 48.42"
	PC	710+62.959						505,040.4309	210,032.5603	71° 20' 48.42"
1315	PI	717+39.281	6° 43' 04.62" RT	0° 29' 50.00"	11,523.156'	676.322'	1,351.094'	505,681.2269	210,248.8748	PI
	CC							508,725.9911	199,114.6957	
	PT	724+14.054						506,342.9282	210,388.7426	78° 03' 53.04"
BA1321	POT	725+14.053						506,440.7664	210,409.4232	
	PC	725+14.053						506,440.7664	210,409.4232	78° 03' 53.03"
BA1320	PI	726+63.743	0° 33' 22.66" LT	0° 11' 08.94"	30,834.434'	149.689'	299.376'	506,587.2197	210,440.3799	PI
	CC							500,064.0054	240,577.2739	
	PRC	728+13.430						506,733.3655	210,472.7571	77° 30' 30.37"
	PRC	728+13.430						506,733.3655	210,472.7571	77° 30' 30.37"
BA1325	PI	729+63.715	0° 30' 39.73" RT	0° 10' 12.08"	33,698.899'	150.285'	300.569'	506,880.0934	210,505.2632	PI
	CC							514,022.2975	177,571.5824	
	PT	731+13.999						507,027.1053	210,536.4593	78° 01' 10.10"
BA1324	POT	737+30.837						507,630.5077	210,664.5022	
BA1367	POT	744+30.491						508,315.0809	210,808.9855	

ALIGNMENT TABULATION

POINT NUMBER	POINT	STATION	CIRCULAR CURVE DATA DELTA	DEGREE	RADIUS	TANGENT	LENGTH	COORDINATES X	Y	AZIMUTH
C.S.A.H. 5 N.B. (NBCSAH5)										
1200	POT	100+00.000						503,204.2588	208,452.9724	
	PC	104+00.019						503,134.3867	208,846.8414	349° 56' 25.50"
1205	PI	106+52.156	10° 03' 34.50" RT	2° 00' 00.00"	2,864.789'	252.138'	502.979'	503,090.3452	209,095.1028	PI
	CC							505,955.1342	209,347.2404	
	PT	109+02.998						503,090.3452	209,347.2404	0° 00' 00.00"
	PC	125+12.190						503,090.3452	210,956.4325	0° 00' 00.00"
1210	PI	126+71.545	6° 22' 03.49" RT	2° 00' 00.00"	2,864.789'	159.355'	318.382'	503,090.3452	211,115.7875	PI
	CC							505,955.1342	210,956.4325	
	PT	128+30.572						503,108.0189	211,274.1593	6° 22' 03.49"
1215	POT	132+00.000						503,148.9913	211,641.3084	
C.S.A.H. 5 S.B. (SBCSAH5)										
A PT. 46.00' LT NBCSAH5 STA. 100.000 =										
1225	POT	100+00.000						503,158.9660	208,444.9375	
	PC	104+00.019						503,089.0938	208,838.8064	349° 56' 25.50"
1230	PI	106+11.259	8° 18' 05.47" RT	1° 58' 06.22"	2,910.789'	211.240'	421.741'	503,052.1961	209,046.7991	PI
	CC							505,955.1342	209,347.2404	
	PT	108+21.759						503,045.7154	209,257.9398	358° 14' 30.97"
	PC	111+87.237						503,034.5028	209,623.2455	358° 14' 30.97"
1235	PI	112+57.565	1° 45' 29.03" RT	1° 15' 00.00"	4,583.662'	70.328'	140.645'	503,032.3452	209,693.5404	PI
	CC							507,616.0076	209,763.8684	
	PT	113+27.882						503,032.3452	209,763.8684	0° 00' 00.00"
	PC	118+48.105						503,032.3452	210,284.0909	0° 00' 00.00"
1240	PI	119+53.561	2° 38' 09.40" RT	1° 15' 00.00"	4,583.662'	105.456'	210.875'	503,032.3452	210,389.5473	PI
	CC							507,616.0076	210,284.0909	
	PT	120+58.980						503,037.1951	210,494.8920	2° 38' 09.40"
	PC	121+08.996						503,039.4953	210,544.8546	2° 38' 09.40"
1245	PI	122+14.452	2° 38' 09.40" LT	1° 15' 00.00"	4,583.662'	105.456'	210.875'	503,044.3452	210,650.1994	PI
	CC							498,460.6829	210,755.6557	
	PT	123+19.871						503,044.3452	210,755.6557	0° 00' 00.00"
	PC	125+20.648						503,044.3452	210,956.4325	0° 00' 00.00"
1246	PI	126+82.562	6° 22' 03.49" RT	1° 58' 06.22"	2,910.789'	161.914'	323.494'	503,044.3452	211,118.3462	PI
	CC							505,955.1342	210,956.4325	
	PT	128+44.142						503,062.3027	211,279.2610	6° 22' 03.49"
1247	POT	132+13.570 =						503,103.2751	211,646.4102	
A PT. 46.00' LT NBCSAH5 STA. 132.000										
126TH ST. (126CON)										
1250	POT	11+00.000						502,187.2585	210,251.1986	
	PC	12+00.000						502,285.7321	210,268.6042	79° 58' 34.51"
1255	PI	14+00.768	67° 34' 59.21" LT	19° 05' 54.94"	300.000'	200.768'	353.864'	502,483.4360	210,303.5493	PI
	CC							502,233.5152	210,564.0249	
	PT	15+53.864						502,526.5246	210,499.6394	12° 23' 35.30"
	PC	16+03.864						502,537.2555	210,548.4743	12° 23' 35.30"
1260	PI	18+45.100	77° 36' 24.70" RT	19° 05' 54.94"	300.000'	241.236'	406.349'	502,589.0291	210,784.0888	PI
	CC							502,830.2649	210,484.0888	
	PT	20+10.213						502,830.2649	210,784.0888	90° 00' 00.00"
1265	POT	28+70.293						503,690.3452	210,784.0888	

S.P. 179-020-031 S.P. 019-605-028

SHEET 1 OF 5

ALIGNMENT TABULATIONS

DRAWN BY: GLJ | CHECKED BY: HS | CERTIFIED BY _____ LICENSED PROFESSIONAL ENGINEER LIC. NO. 18520 DATE 6/18/12

STATE PROJ. NO. 1901-148 (T.H. 13) SHEET NO. 197 OF 442 SHEETS

ALIGNMENT TABULATION

POINT NUMBER	POINT	STATION	CIRCULAR CURVE DATA DELTA	DEGREE	RADIUS	TANGENT	LENGTH	COORDINATES X	Y	AZIMUTH
N.W. FRONT ST. (NWFRONT)										
	POC	126CON STA. 13+60.377 =								
1450	POT	5+00.000						502,428.9603	210,336.4262	
	PC	5+43.729						502,457.7242	210,303.4895	138° 52' 08.26"
1451	PI	5+75.591	29° 44' 24.31" LT	47° 44' 47.34"	120.000'	31.862'	62.287'	502,478.6827	210,279.4906	PI
	CC							502,548.1091	210,382.4235	
	PRC	6+06.016						502,508.7858	210,269.0495	109° 07' 43.95"
	PRC	6+06.016						502,508.7858	210,269.0495	109° 07' 43.95"
1452	PI	6+38.578	12° 48' 47.05" RT	19° 45' 25.80"	290.000'	32.562'	64.853'	502,539.5500	210,258.3790	PI
	CC							502,413.7545	209,995.0621	
	PT	6+70.869						502,567.1818	210,241.1517	121° 56' 31.00"
1453	POT	8+00.000						502,676.7605	210,172.8336	
N.E. FRONT ST. 2 (NEFRONT2)										
A PT. 76.14' LT 13WB STA. 706+34.540 =										
1520	POT	25+00.000						504,610.1623	209,967.6782	
	PC	25+92.487						504,699.3084	209,992.3124	74° 33' 09.70"
1525	PI	27+23.873	73° 47' 48.89" LT	32° 44' 25.60"	175.000'	131.386'	225.400'	504,825.9486	210,027.3074	PI
	CC							504,652.6968	210,160.9906	
	PT	28+17.887						504,827.6816	210,158.6823	0° 45' 20.81"
1530	POT	29+90.827						504,829.9628	210,331.6076	
N.W. RAMP (NWRAMP)										
	POT	SBCSAH5 STA. 117+44.439								
1730	POT	70+00.000						503,032.3452	210,180.4253	
	PC	71+95.123						502,837.2223	210,180.4253	270° 00' 00.00"
1731	PI	72+56.508	33° 11' 11.66" LT	27° 48' 48.55"	206.000'	61.385'	119.318'	502,775.8373	210,180.4253	PI
	CC							502,837.2223	209,974.4253	
	PT	73+14.441						502,724.4647	210,146.8252	236° 48' 48.34"
	PC	74+37.165						502,621.7578	210,079.6501	236° 48' 48.34"
1732	PI	76+00.111	34° 44' 05.05" RT	10° 59' 50.17"	521.000'	162.946'	315.849'	502,485.3897	209,990.4590	PI
	CC							502,336.5795	210,515.6711	
	PCC	77+53.014						502,322.5035	209,994.8613	271° 32' 53.39"
1733	PI	79+04.149	17° 11' 19.44" RT	5° 43' 46.48"	1,000.000'	151.135'	300.000'	502,171.4234	209,998.9446	PI
	CC							502,349.5208	210,994.4963	
	PT	80+53.014 =						502,028.2979	210,047.4927	288° 44' 12.83"
A PT. 18.00' LT 13WB STA. 679+49.806 =										
S.E. RAMP (SERAMP)										
	POT	NBCSAH5 STA. 111+49.201 =								
1760	POT	60+00.000						503,090.3452	209,593.4432	
	PC	62+58.715						503,349.0599	209,593.4432	90° 00' 00.00"
1761	PI	68+05.222	17° 57' 58.95" LT	1° 39' 26.45"	3,457.077'	546.507'	1,084.044'	503,895.5674	209,593.4432	PI
	CC							503,349.0599	213,050.5207	
	PT	73+42.759						504,415.4259	209,762.0182	72° 02' 01.05"
1762	POT	74+42.776 =						504,510.5656	209,792.8693	
A PT. 18.00' RT EB13 STA. 705+08.178										

ALIGNMENT TABULATION

POINT NUMBER	POINT	STATION	CIRCULAR CURVE DATA DELTA	DEGREE	RADIUS	TANGENT	LENGTH	COORDINATES X	Y	AZIMUTH
S.W. RAMP (SWRAMP)										
A PT. 43.00' RT EB13 STA. 681+49.953 =										
1700	POT	50+00.000						502,185.3587	209,879.0422	
	PC	51+66.220						502,340.4141	209,819.1526	111° 07' 08.03"
1705	PI	52+63.188	3° 52' 37.06" LT	1° 59' 59.47"	2,865.000'	96.968'	193.862'	502,430.8694	209,784.2145	PI
	CC							503,372.6865	212,491.7241	
	PT	53+60.082						502,523.4799	209,755.4724	107° 14' 30.97"
1710	POT	58+96.005 =						503,035.3200	209,596.6208	
	POT	SBCSAH5 STA. 111+60.600								
S.E. FRONT ST. (SEFRONT)										
	POC	NBCSAH5 STA. 105+75.519 =								
1546	POT	30+00.000						503,109.0422	209,020.4740	
	PC	31+70.714						503,279.7385	209,022.9154	89° 10' 50.10"
1551	PI	31+78.351	8° 44' 03.49" RT	57° 17' 44.81"	100.000'	7.637'	15.244'	503,287.3746	209,023.0246	PI
	CC							503,281.1686	208,922.9256	
	PT	31+85.958						503,294.9388	209,021.9730	97° 54' 53.59"
	PC	32+49.708						503,358.0816	209,013.1944	97° 54' 53.59"
1556	PI	33+63.709	97° 29' 10.46" LT	57° 17' 44.81"	100.000'	114.001'	170.146'	503,470.9962	208,997.4964	PI
	CC							503,371.8518	209,112.2418	
	PT	34+19.854						503,471.8490	209,111.4937	0° 25' 43.13"
	PC	37+43.910						503,474.2734	209,435.5405	0° 25' 43.13"
1561	PI	38+27.440	79° 44' 38.70" RT	57° 17' 44.81"	100.000'	83.530'	139.180'	503,474.8983	209,519.0683	PI
	CC							503,574.2706	209,434.7924	
	PT	38+83.089						503,557.2027	209,533.3251	80° 10' 21.83"
	PC	43+31.416						503,998.9515	209,609.8448	80° 10' 21.83"
1566	PI	45+07.346	5° 45' 18.56" LT	1° 38' 13.28"	3,500.000'	175.929'	351.562'	504,172.2992	209,639.8722	PI
	CC							503,401.5768	213,058.4886	
	PT	46+82.979						504,341.7620	209,687.1310	74° 25' 03.27"
	PC	50+19.580						504,665.9918	209,777.5504	74° 25' 03.27"
1571	PI	51+00.652	3° 42' 53.06" LT	2° 17' 30.59"	2,500.000'	81.071'	162.086'	504,744.0834	209,799.3281	PI
	CC							503,994.4309	212,185.6629	
	PT	51+81.666						504,820.6001	209,826.1196	70° 42' 10.21"
	PC	53+79.617						505,007.4290	209,891.5358	70° 42' 10.21"
1576	PI	54+33.657	2° 28' 35.83" RT	2° 17' 30.59"	2,500.000'	54.040'	108.063'	505,058.4328	209,909.3943	PI
	CC							505,833.5982	207,531.9925	
	PT	54+87.680						505,110.1606	209,925.0320	73° 10' 46.04"
	PC	58+14.838						505,423.3220	210,019.7036	73° 10' 46.04"
1581	PI	58+71.963	2° 37' 04.63" RT	2° 17' 30.59"	2,500.000'	57.125'	114.230'	505,478.0028	210,036.2341	PI
	CC							506,146.7596	207,626.6641	
	PT	59+29.068						505,533.3816	210,050.2497	75° 47' 50.67"
1586	POT	63+50.000 =						505,941.4474	210,153.5259	
A PT. 74.54' RT EB13 STA. 719+85.861										
N.E. FRONT ST. 3 (NEFRONT3)										
1600	POT	5+00.000						504,816.8973	210,100.4662	
1601	POT	10+00.000						505,298.9429	210,233.2520	

S.P. 179-020-031 S.P. 019-605-028

SHEET 2 OF 5

ALIGNMENT TABULATIONS

DRAWN BY: GLJ | CHECKED BY: HS | CERTIFIED BY _____ LICENSED PROFESSIONAL ENGINEER LIC. NO. 18520 DATE 6/18/12

STATE PROJ. NO. 1901-148 (T.H. 13) SHEET NO. 198 OF 442 SHEETS

DISTRICT #: METRO
IPLOT NAME: d190l148_all_tabl
PATH & FILENAME: Projects/DM_ROS/013/1901/148/Design/PlanSheets/Align/d190l148_all_tab.dgn
PLOTTED/REVISED: 13-JUN-2012 13:24

ALIGNMENT TABULATION

POINT NUMBER	POINT	STATION	CIRCULAR CURVE DATA DELTA	DEGREE	RADIUS	TANGENT	LENGTH	COORDINATES X	Y	AZIMUTH
N.W. LOOP 1 (NWLOOP1)										
A PT. 20.00' LT WB13 STA. 688+12.480 =										
	PC	80+00.000						502,848.2162	209,786.6939	283° 06' 48.56"
1740	PI	80+91.595	41° 46' 41.42" RT	23° 52' 23.67"	240.000'	91.595'	175.000'	502,759.0101	209,807.4749	PI
	CC							502,902.6676	210,020.4353	
	PCC	81+75.000						502,706.3317	209,882.4054	324° 53' 29.98"
1741	PI	343+10.167	179° 17' 54.52" RT	35° 48' 35.50"	160.000'	26,135.167'	500.696'	487,675.3612	231,262.6978	PI
	CC							502,837.2223	209,974.4253	
	PCC	86+75.696						502,966.9764	210,068.0409	144° 11' 24.50"
1742	PI	87+53.237	35° 48' 35.50" RT	23° 52' 23.67"	240.000'	77.541'	150.000'	503,012.3452	210,005.1583	PI
	CC							502,772.3452	209,927.6176	
	PT	88+25.696 =						503,012.3452	209,927.6176	180° 00' 00.00"
A PT. 20.00' LT SBCSAH5 STA. 114+91.631										
N.W. LOOP 2 (NWLOOP2)										
	PC	84+00.000						502,710.9776	210,102.7308	45° 27' 49.86"
NWLOOP2A	PI	84+73.706	44° 32' 10.14" RT	31° 49' 51.56"	180.000'	73.706'	139.914'	502,763.5160	210,154.4253	PI
	CC							502,837.2223	209,974.4253	
	PT	85+39.914						502,837.2223	210,154.4253	90° 00' 00.00"
1102	POT	87+35.037 =						503,032.3452	210,154.4253	
	POT	SBCSAH5 STA. 117+18.439								
FRONTCON (FRONTCON)										
	POT	NBCSAH5 STA. 117+10.183 =								
1810	POT	10+00.000						503,090.3452	210,162.4253	
	PC	11+27.090						503,217.4353	210,162.4253	90° 00' 00.00"
1811	PI	12+41.090	90° 00' 00.00" RT	50° 15' 34.04"	114.000'	114.000'	179.071'	503,331.4353	210,162.4253	PI
	CC							503,217.4353	210,048.4253	
	PT	13+06.161						503,331.4353	210,048.4253	180° 00' 00.00"
1812	POT	15+25.000						503,331.4353	209,829.5861	
2141	PI	15+76.051	86° 25' 00.67" LT	105° 25' 27.43'	54.348'	51.051'	81.971'	503,331.3287	209,778.5352	PI
	CC							503,385.7830	209,829.4727	
	PT	16+06.971						503,382.2732	209,775.2384	93° 42' 09.81"
VALLEY DR. (VALLEYDR)										
	POC	SEFRONT STA. 50+35.900 =								
1684	POT	5+00.000						504,726.2388	209,600.0293	
1685	POT	6+87.329						504,681.6975	209,781.9856	
FRONTCON 1 (FRONTCON1)										
A PT. 0' NBCSAH5 STA. 117+19.183 =										
1820	POT	10+00.000						503,090.3452	210,154.4253	
	PC	11+35.090						503,225.4353	210,154.4253	90° 00' 00.00"
1821	PI	12+41.090	90° 00' 00.00" RT	54° 03' 09.44"	106.000'	106.000'	166.504'	503,331.4353	210,154.4253	PI
	CC							503,225.4353	210,048.4253	
	PT	13+01.594						503,331.4353	210,048.4253	180° 00' 00.00"

ALIGNMENT TABULATION

POINT NUMBER	POINT	STATION	CIRCULAR CURVE DATA DELTA	DEGREE	RADIUS	TANGENT	LENGTH	COORDINATES X	Y	AZIMUTH
E.B.13 CONN (13EBONN)										
BA1361	POT	724+30.308						506,356.1638	210,326.1261	
	PC	725+30.308						506,454.0020	210,346.8067	78° 03' 53.03"
BA1365	PI	726+80.308	0° 33' 22.66" LT	0° 11' 07.56"	30,898.434'	150.000'	299.998'	506,600.7593	210,377.8277	PI
	CC							500,064.0055	240,577.2739	
	PRC	728+30.306						506,747.2084	210,410.2721	77° 30' 30.37"
BA1370	PI	729+80.306	0° 30' 39.73" RT	0° 10' 13.25"	33,634.899'	150.000'	299.998'	506,893.6576	210,442.7165	PI
	CC							514,022.2976	177,571.5824	
	PT	731+30.304						507,040.3904	210,473.8534	78° 01' 10.10"
BA1375	POT	737+47.142						507,643.7928	210,601.8962	
W.B.13 CONN (13WBCONN)										
BA1316	POT	724+14.054						506,342.9282	210,388.7425	
	PC	725+14.054						506,440.7664	210,409.4232	78° 03' 53.03"
BA1320	PI	726+63.743	0° 33' 22.66" LT	0° 11' 08.94"	30,834.434'	149.689'	299.376'	506,587.2197	210,440.3799	PI
	CC							500,064.0055	240,577.2739	
	PRC	728+13.430						506,733.3655	210,472.7571	77° 30' 30.37"
BA1325	PI	729+63.716	0° 30' 39.73" RT	0° 10' 12.08"	33,698.899'	150.285'	300.569'	506,880.0934	210,505.2632	PI
	CC							514,022.2976	177,571.5824	
	PT	731+13.999						507,027.1053	210,536.4593	78° 01' 10.10"
BA1330	POT	737+30.837						507,630.5077	210,664.5022	
WILLIAMS DR. E.B. (EBWIL)										
1975	POT	40+00.000						502,528.5494	208,848.5649	
1980	POT	45+55.000 =						503,067.4359	208,981.3296	
	POT	SBCSAH5 STA. 105+44.193								
WILLIAMS DR. W.B. (WBWIL)										
1990	POT	40+00.000						502,523.0409	208,870.9238	
	PC	42+21.924						502,736.2367	208,932.5496	73° 52' 39.64"
1991	PI	42+50.446	2° 16' 55.45" RT	4° 00' 03.97"	1,432.000'	28.522'	57.036'	502,763.6367	208,940.4697	PI
	CC							503,133.8873	207,556.8686	
	PT	42+78.960						502,791.3304	208,947.2926	76° 09' 35.08"
1992	POT	45+59.211 =						503,063.4452	209,014.3332	
	POT	SBCSAH5 STA. 105+77.437								

S.P. 179-020-031 S.P. 019-605-028

ALIGNMENT TABULATIONS

DRAWN BY: GLJ | CHECKED BY: HS | CERTIFIED BY _____ LICENSED PROFESSIONAL ENGINEER LIC. NO. 18520 DATE 6/18/12

STATE PROJ. NO. 1901-148 (T.H. 13) SHEET NO. 199 OF 442 SHEETS

PLOTTED/REVISED: 13-JUN-2012 13:24
DISTRICT #: METRO
IPLOT NAME: d1901148_all_tab2
PATH & FILENAME: Projects/DM_ROS/013/1901/148/Design/PlanSheets/Align/d1901148_all_tabdgn

ALIGNMENT TABULATION

POINT NUMBER	POINT	STATION	CIRCULAR CURVE DATA DELTA	DEGREE	RADIUS	TANGENT	LENGTH	COORDINATES X	Y	AZIMUTH
DRIVE1		(DRIVE1)								
D1002	POT	10+00.000						503,446.7219	208,939.9105	
D1003	POT	10+03.594						503,450.3159	208,939.9105	
	PC	10+03.594						503,450.3159	208,939.9105	90° 00' 00.00"
DRIVE1-1	PI	10+08.594	90° 00' 00.00" LT	145° 54' 56.12"	5.000'	5.000'	7.854'	503,455.3159	208,939.9105	PI
	CC							503,450.3159	208,944.9105	
	PT	10+11.448						503,455.3159	208,944.9105	0° 00' 00.00"
D1005	POT	10+54.125						503,455.3159	208,987.5870	
	PC	10+54.125						503,455.3159	208,987.5870	0° 00' 00.00"
DRIVE2	PI	10+71.253	37° 49' 09.36" LT	114° 35' 29.61"	50.000'	17.128'	33.004'	503,455.3159	209,004.7153	PI
	CC							503,405.3159	208,987.5870	
	PT	10+87.128						503,444.8133	209,018.2457	322° 10' 50.64"
D1007	POT	11+06.118						503,433.1691	209,033.2469	
DRIVE2		(DRIVE2)								
DRIVE2	POT	10+00.000						502,531.8900	210,524.0569	
	PC	10+62.541						502,592.9735	210,510.6345	102° 23' 35.31"
DRIVE2-1	PI	11+14.809	77° 36' 24.69" RT	100° 34' 11.01"	65.000'	52.268'	77.167'	502,644.0233	210,499.4168	PI
	CC							502,579.0233	210,447.1491	
	PT	11+39.708						502,644.0233	210,447.1491	180° 00' 00.00"
DRIVE3	POT	11+93.698						502,644.0233	210,393.1590	
RETAINING WALL 1		(RWALL1)								
1000	POT	10+00.000						503,118.3452	209,782.6290	
1001	POT	12+23.852						503,337.8455	209,738.7066	
	PC	12+23.852						503,337.8455	209,738.7066	93° 39' 17.43"
1002	PI	17+55.787	20° 19' 18.24" LT	1° 55' 49.62"	2,968.000'	531.935'	1,052.694'	503,868.6985	209,704.7980	PI
	CC							503,527.0429	212,700.6702	
	PT	22+76.545						504,378.2861	209,857.3607	73° 19' 59.19"
1003	POT	22+76.545						504,378.2861	209,857.3607	
RETAINING WALL 2		(RWALL2)								
1005	POT	10+00.000						502,471.1927	209,788.5853	
	PC	10+00.000						502,471.1927	209,788.5853	108° 26' 36.55"
1006	PI	10+29.879	1° 12' 05.57" LT	2° 00' 38.63"	2,849.500'	29.879'	59.757'	502,499.5375	209,779.1324	PI
	CC							503,372.6865	212,491.7241	
	PT	10+59.757						502,528.0742	209,770.2759	107° 14' 30.97"
1007	POT	10+72.435						502,540.1827	209,766.5180	
1008	POT	12+52.835						502,715.6506	209,724.6254	
1009	POT	15+29.556						502,979.9367	209,642.6032	
1010	POT	15+52.422						503,002.6786	209,640.2201	

ALIGNMENT TABULATION

POINT NUMBER	POINT	STATION	CIRCULAR CURVE DATA DELTA	DEGREE	RADIUS	TANGENT	LENGTH	COORDINATES X	Y	AZIMUTH
RETAINING WALL 3		(RWALL3)								
1025	POT	10+00.000						502,133.2909	209,879.8572	
	PC	12+15.084						502,333.9286	209,802.3615	111° 07' 08.03"
1026	PI	13+12.661	3° 52' 37.06" LT	1° 59' 14.52"	2,883.000'	97.577'	195.080'	502,424.9522	209,767.2040	PI
	CC							503,372.6865	212,491.7241	
	PT	14+10.164						502,518.1446	209,738.2813	107° 14' 30.97"
1027	POT	18+70.839						502,958.1171	209,601.7341	
1028	POT	19+28.792						502,994.7889	209,556.8586	
1029	POT	19+44.524						503,010.5134	209,557.3413	
RETAINING WALL 4		(RWALL4)								
1015	POT	10+00.000						503,118.3452	209,622.6290	
1016	POT	10+69.784						503,186.7743	209,608.9432	
	PC	12+32.070						503,349.0599	209,608.9432	90° 00' 00.00"
1017	PI	13+51.936	3° 59' 22.15" LT	1° 39' 53.32"	3,441.577'	119.866'	239.636'	503,468.9263	209,608.9432	PI
	CC							503,349.0599	213,050.5207	
	PT	14+71.706						503,588.5023	209,617.2827	86° 00' 37.85"
1018	POT	14+71.706						503,588.5023	209,617.2827	
RETAINING WALL 5		(RWALL5)								
1020	POT	10+00.000						503,212.7414	209,563.4432	
1021	POT	13+66.000						503,578.7414	209,563.4432	
	PI	17+87.964						503,994.5138	209,635.4633	80° 10' 21.83"
RWALL5-1	PI	19+62.586	5° 45' 18.56" LT	1° 38' 57.59"	3,474.000'	174.622'	348.939'	504,166.5738	209,665.2676	PI
	CC							503,401.5768	213,058.4886	
	PT	21+36.903						504,334.7778	209,712.1754	74° 25' 03.27"
1022	POT	24+33.379						504,620.3571	209,791.8161	
RETAINING WALL 6		(RWALL6)								
1053	POT	10+00.000						502,994.8452	210,340.7540	
	PC	10+91.500						502,994.8452	210,249.2540	180° 00' 00.00"
RWALL6-3	PI	11+14.579	69° 07' 36.67" RT	71° 01' 55.84"	33.500'	23.079'	40.417'	502,994.8452	210,226.1755	PI
	CC							502,961.3452	210,249.2540	
	PCC	11+31.917						502,973.2813	210,217.9526	249° 07' 36.67"
	PCC	11+31.917						502,973.2813	210,217.9526	249° 07' 36.67"
RWALL6-4	PI	11+68.480	20° 52' 23.33" RT	28° 51' 51.74"	198.500'	36.563'	72.315'	502,939.1183	210,204.9253	PI
	CC							502,902.5557	210,403.4253	
	PT	12+04.232						502,902.5557	210,204.9253	270° 00' 00.00"
1054	POT	13+87.211						502,719.5763	210,204.9253	
RETAINING WALL 7		(RWALL7)								
1695	POT	5+00.000						503,141.4353	210,167.2231	
1696	POT	6+90.000						503,331.4353	210,167.2231	
RETAINING WALL 8		(RWALL8)								
R8000	POT	10+00.000						502,883.4567	209,009.3319	
R8001	POT	11+05.424						502,985.8193	209,034.5508	

S.P. 179-020-031 S.P. 019-605-028 **SHEET 4 OF 5**

ALIGNMENT TABULATIONS

DRAWN BY: GLJ | CHECKED BY: HS | CERTIFIED BY LICENSED PROFESSIONAL ENGINEER LIC. NO. 18520 DATE 6/18/12

STATE PROJ. NO. 1901-148 (T.H. 13) SHEET NO. 200 OF 442 SHEETS

PLOTTED/REVISED: 13-JUN-2012 13:24
DISTRICT #: METRO
IPLOT NAME: d1901148_all_tab3
PATH & FILENAME: Projects/DM_ROS/013/1901/148/Design/PlanSheets/Align/d1901148_all_tabdgn

ALIGNMENT TABULATION

POINT NUMBER	POINT	STATION	CIRCULAR CURVE DATA DELTA	DEGREE	RADIUS	TANGENT	LENGTH	COORDINATES X	Y	AZIMUTH
RETAINING WALL 9 (RWALL9)										
	PC	10+00.000						503,464.5433	208,905.4654	297° 40' 52.30"
C9000	PI	10+22.465	112° 32' 16.16" RT	81° 58' 18.71"	15.000'	22.465'	29.462'	503,444.6494	208,915.9016	PI
	CC							503,471.5115	208,918.7486	
	PRC	10+29.462						503,461.9137	208,930.2760	50° 13' 08.46"
	PRC	10+54.412						503,461.9137	208,930.2760	50° 13' 08.46"
C9001	PI	10+61.441	50° 13' 08.46" LT	81° 58' 18.71"	15.000'	7.030'	13.147'	503,467.3159	208,934.7739	PI
	CC							503,452.3159	208,941.8034	
	PT	10+67.559						503,467.3159	208,941.8034	0° 00' 00.00"
R9002	POT	11+13.343						503,467.3159	208,987.5870	
BYPASS 1 (BYPASS1)										
BP1000	POT	10+00.000						499,940.4393	210,636.9780	
BP1001	POT	14+75.904						500,408.9734	210,553.5508	
BYPASS 2 (BYPASS2)										
BP1002	POT	10+00.000						500,379.8835	210,558.7305	
BP1003	POT	15+18.603						500,885.8063	210,342.9878	
BYPASS 3 (BYPASS3)										
BP1006	POT	10+00.000						505,850.7500	210,257.5014	
BP1007	POT	12+00.590						506,050.6001	210,274.7143	
BYPASS 4 (BYPASS4)										
BP1004	POT	10+00.000						505,724.3505	210,190.3129	
BP1005	POT	12+38.657						505,944.8962	210,281.5083	

ALIGNMENT TABULATION

POINT NUMBER	POINT	STATION	CIRCULAR CURVE DATA DELTA	DEGREE	RADIUS	TANGENT	LENGTH	COORDINATES X	Y	AZIMUTH
NOISE WALL 1 (NWALL1)										
NW2000	POT	10+00.000						504,620.3571	209,791.8161	
	PC	10+40.125						504,659.0075	209,802.5947	74° 25' 03.27"
NWALL1-2-1	PI	11+20.354	3° 42' 53.06" LT	2° 18' 57.87"	2,474.000'	80.228'	160.389'	504,736.2870	209,824.1460	PI
	CC							503,994.4309	212,185.6629	
	PT	12+00.515						504,812.0079	209,850.6589	70° 42' 10.21"
	PC	13+98.465						504,998.8369	209,916.0751	70° 42' 10.21"
NWALL1-2-2	PI	14+53.067	2° 28' 35.83" RT	2° 16' 06.20"	2,526.000'	54.602'	109.180'	505,050.3711	209,934.1192	PI
	CC							505,833.5982	207,531.9925	
	PT	15+07.645						505,102.6369	209,949.9197	73° 10' 46.04"
	PC	18+34.803						505,415.7983	210,044.5912	73° 10' 46.04"
NWALL1-2-3	PI	18+92.522	2° 37' 04.63" RT	2° 16' 06.20"	2,526.000'	57.719'	115.410'	505,471.0477	210,061.2936	PI
	CC							506,146.7596	207,626.6641	
	PT	19+50.214						505,527.0024	210,075.4550	75° 47' 50.67"
NW2001	POT	23+19.974						505,885.4613	210,166.1763	
NOISE WALL 2 (NWALL2)										
NW1000	POT	10+00.000						503,582.0827	209,564.0220	
	PC	14+21.964						503,994.5138	209,635.4633	80° 10' 21.83"
NWALL1-1	PI	15+96.586	5° 45' 18.56" LT	1° 38' 57.59"	3,474.000'	174.622'	348.939'	504,166.5738	209,665.2676	PI
	CC							503,401.5768	213,058.4886	
	PT	17+70.903						504,334.7778	209,712.1754	74° 25' 03.27"
NW2000	POT	10+00.000						504,620.3571	209,791.8161	

PLOTTED/REVISED: 13-JUN-2012 13:24

DISTRICT *: METRO
IPLOT NAME: d1901148_all_tab4
PATH & FILENAME: Projects/DM_ROS/013/1901/148/Design/PlanSheets/Align/d1901148_all_tabdgn

S.P. 179-020-031 S.P. 019-605-028

ALIGNMENT TABULATIONS

DRAWN BY: GLJ | CHECKED BY: HS | CERTIFIED BY LICENSED PROFESSIONAL ENGINEER LIC. NO. 18520 DATE 6/18/12

STATE PROJ. NO. 1901-148 (T.H. 13) SHEET NO. 201 OF 442 SHEETS

NOTES:
THE RIGHT OF WAY AND EASEMENTS SHOWN ON THE CONSTRUCTION PLAN SHEETS GIVE A GRAPHICAL LOCATION WITH RESPECT TO THE GEOMETRIC DESIGN AND MAP DATA. THE EXACT RIGHT OF WAY, EASEMENTS AND BOUNDARY CORNERS ARE LOCATED BY REFERENCE TO THE RIGHT OF WAY PLATS AND ARE IDENTIFIED ON THE RIGHT OF WAY MAP, WHICH SHALL BE USED FOR STAKING PURPOSES.

WASHBURN AVE

655

655

T.H. 13

N FRONTAGE RD

RW INP

660

℄ 13WB

660

S FRONTAGE RD

℄ 13EB

RW INP

100

SCALE IN FEET

LEGEND

- REMOVE CONCRETE CURB & GUTTER
- REMOVE BITUMINOUS PAVEMENT
- REMOVE BITUMINOUS SHOULDER PAVEMENT

S.P. 179-020-031 S.P. 019-605-028

SHEET 1 OF 8

INPLACE TOPOGRAPHY & REMOVAL PLANS

DRAWN BY: GLJ	CHECKED BY: HS	CERTIFIED BY LICENSED PROFESSIONAL ENGINEER	LIC. NO. 18520 DATE 6/18/12	STATE PROJ. NO. 1901-148 (T.H. 13) SHEET NO. 202 OF 442 SHEETS

PLOTTED/REVISED: 14-JUN-2012 11:24
DISTRICT *: METRO
IPLOT NAME: d190ll148_REM_01
PATH & FILENAME: Projects/DM_ROS/013/1901/148/Design/PlanSheets/Removals-topo/d190ll148_REM_01.dgn

PLOTTED/REVISED: 14-JUN-2012 11:25

DISTRICT #: METRO
IPLOT NAME: d1901148_REM_01A
PATH & FILENAME: Projects/DM_ROS/013/1901/148/Design/PlanSheets/Removals-topo/d1901148_REM_01A.dgn

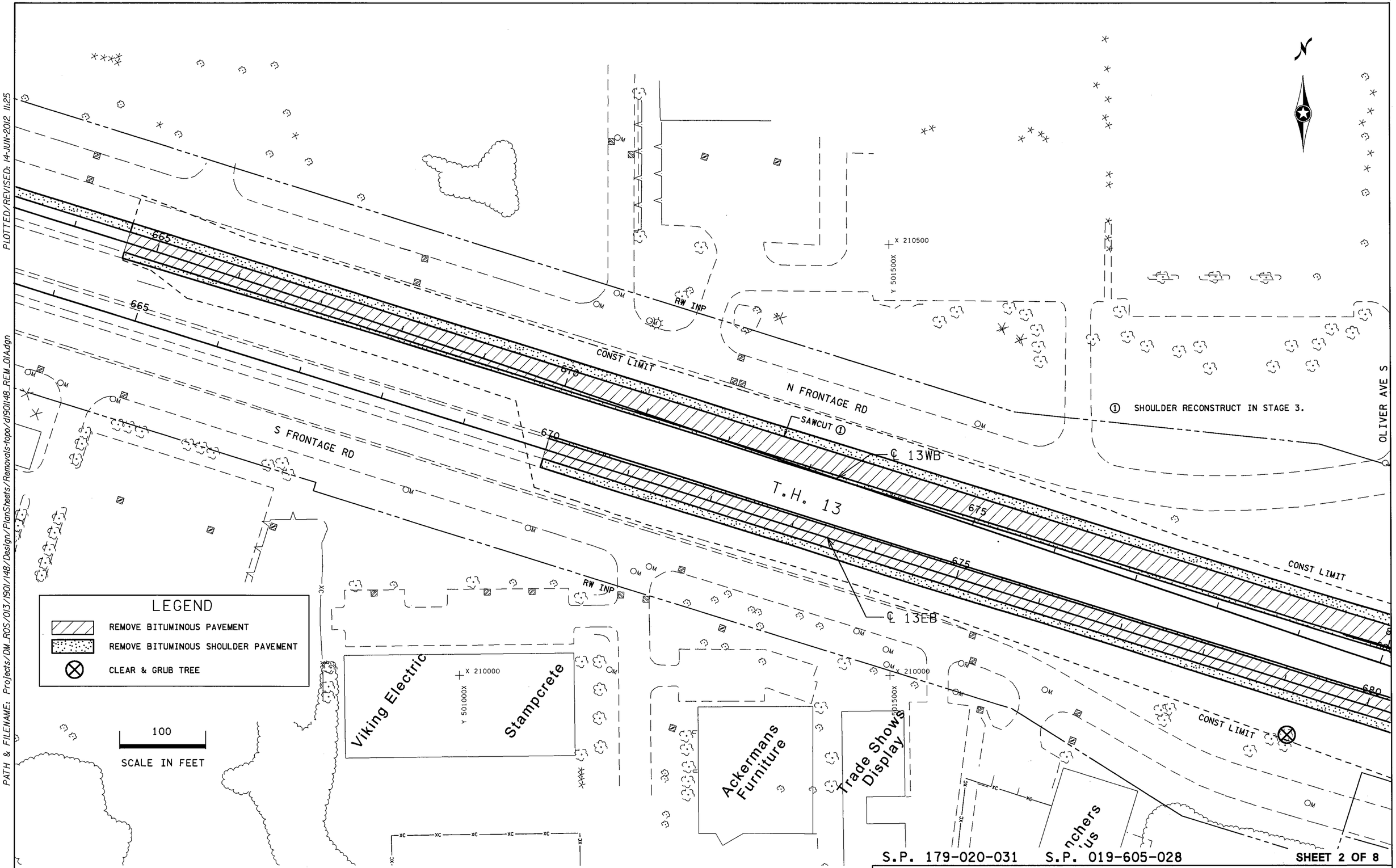

S.P. 179-020-031 S.P. 019-605-028 SHEET 2 OF 8

INPLACE TOPOGRAPHY & REMOVAL PLANS

DRAWN BY: GLJ	CHECKED BY: HS	CERTIFIED BY LICENSED PROFESSIONAL ENGINEER LIC. NO. 18520 DATE 6/18/12	STATE PROJ. NO. 1901-148 (T.H. 13)	SHEET NO. 203 OF 442 SHEETS

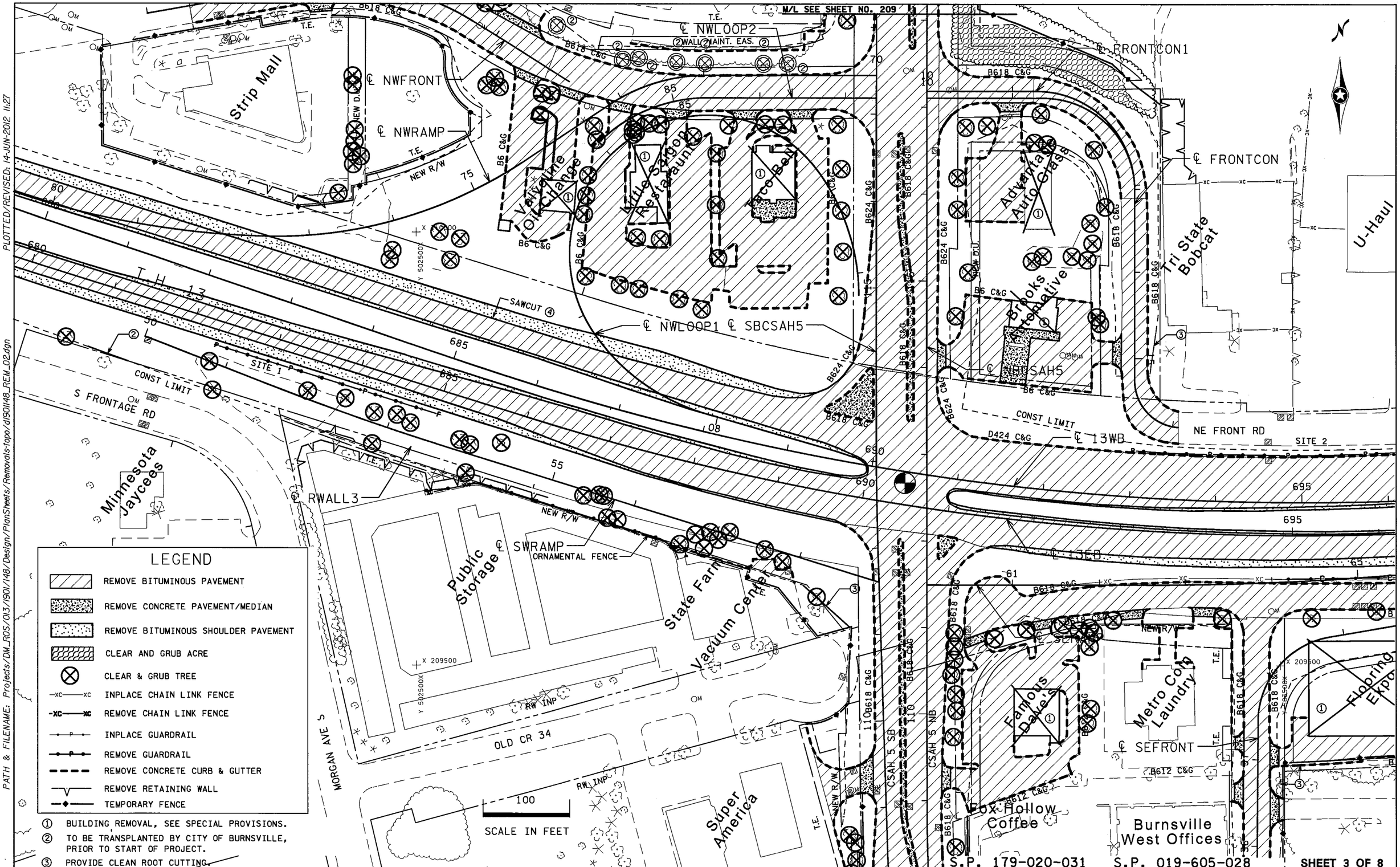

LEGEND

- REMOVE BITUMINOUS PAVEMENT
- REMOVE CONCRETE PAVEMENT/MEDIAN
- REMOVE BITUMINOUS SHOULDER PAVEMENT
- CLEAR AND GRUB ACRE
- CLEAR & GRUB TREE
- INPLACE CHAIN LINK FENCE
- REMOVE CHAIN LINK FENCE
- INPLACE GUARDRAIL
- REMOVE GUARDRAIL
- REMOVE CONCRETE CURB & GUTTER
- REMOVE RETAINING WALL
- TEMPORARY FENCE

① BUILDING REMOVAL, SEE SPECIAL PROVISIONS.
② TO BE TRANSPLANTED BY CITY OF BURNSVILLE, PRIOR TO START OF PROJECT.
③ PROVIDE CLEAN ROOT CUTTING.
④ SHOULDER RECONSTRUCT IN STAGE 2.

DISTRICT #: METRO
IPLOT NAME: d1901148_REM_02
PATH & FILENAME: Projects/DM_ROS/013/1901/148/Design/PlanSheets/Removals-topo/d1901148_REM_02.dgn
PLOTTED/REVISED: 14-JUN-2012 11:27

INPLACE TOPOGRAPHY & REMOVAL PLANS

DRAWN BY: GLJ	CHECKED BY: HS	CERTIFIED BY [signature] LICENSED PROFESSIONAL ENGINEER LIC. NO. 18520 DATE 6/18/12	STATE PROJ. NO. 1901-148 (T.H. 13)	SHEET NO. 204 OF 442 SHEETS

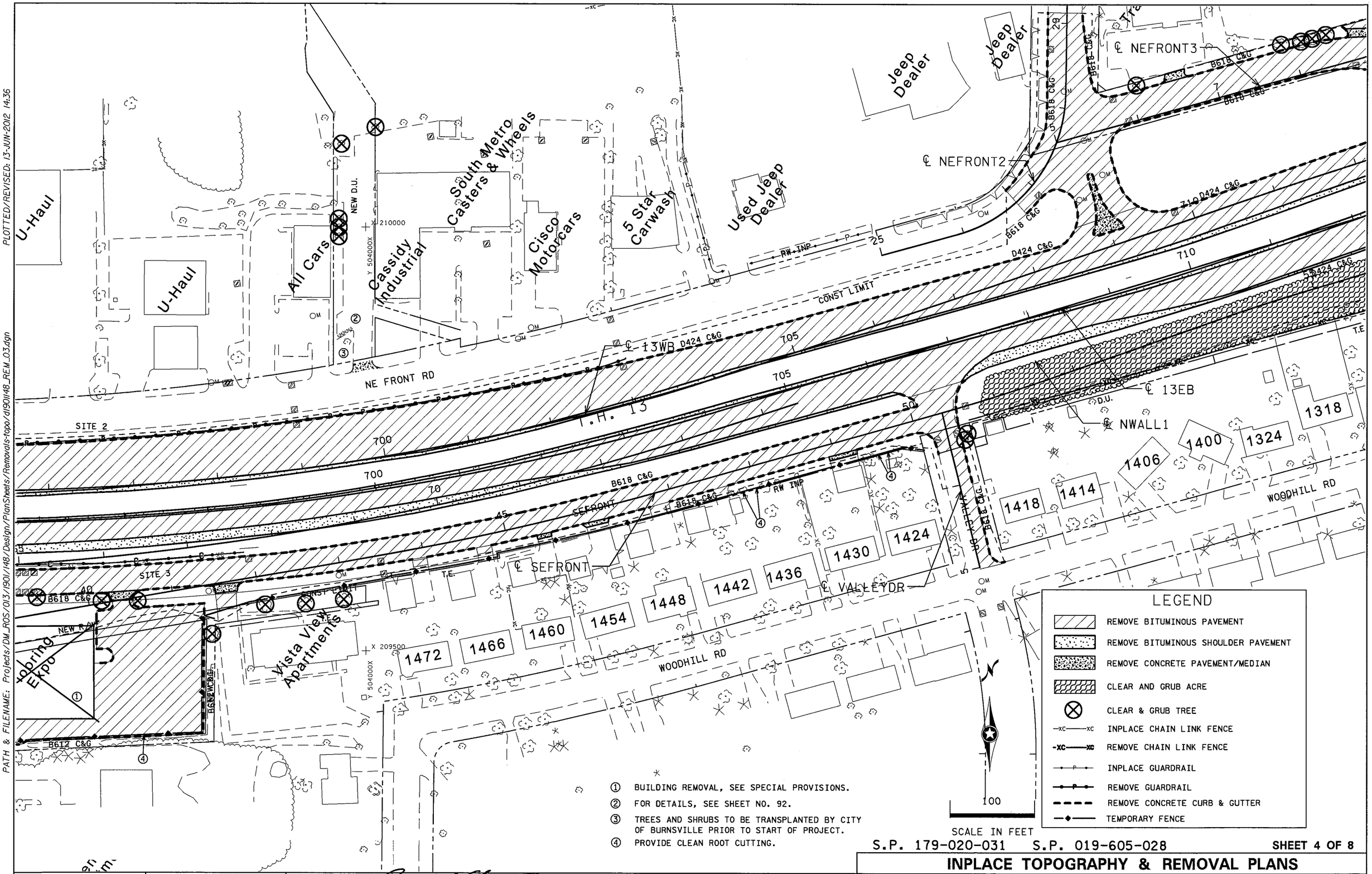

① BUILDING REMOVAL, SEE SPECIAL PROVISIONS.
② FOR DETAILS, SEE SHEET NO. 92.
③ TREES AND SHRUBS TO BE TRANSPLANTED BY CITY OF BURNSVILLE PRIOR TO START OF PROJECT.
④ PROVIDE CLEAN ROOT CUTTING.

S.P. 179-020-031 S.P. 019-605-028 SHEET 4 OF 8

INPLACE TOPOGRAPHY & REMOVAL PLANS

DRAWN BY: GLJ	CHECKED BY: HS	CERTIFIED BY [signature] LICENSED PROFESSIONAL ENGINEER	LIC. NO. 18520 DATE 6/18/12	STATE PROJ. NO. 1901-148 (T.H. 13) SHEET NO. 205 OF 442 SHEETS

PLOTTED/REVISED: 13-JUN-2012 14:36
DISTRICT #: METRO
IPLOT NAME: d1901148_REM_03
PATH & FILENAME: Projects/DM_ROS/013/1901/148/Design/PlanSheets/Removals-topo/d1901148_REM_03.dgn

PLOTTED/REVISED: 13-JUN-2012 14:36

DISTRICT #: METRO
IPLOT NAME: d1901148_REM_04
PATH & FILENAME: Projects/DM_ROS/013/1901/148/Design/PlanSheets/Removals-topo/d1901148_REM_04.dgn

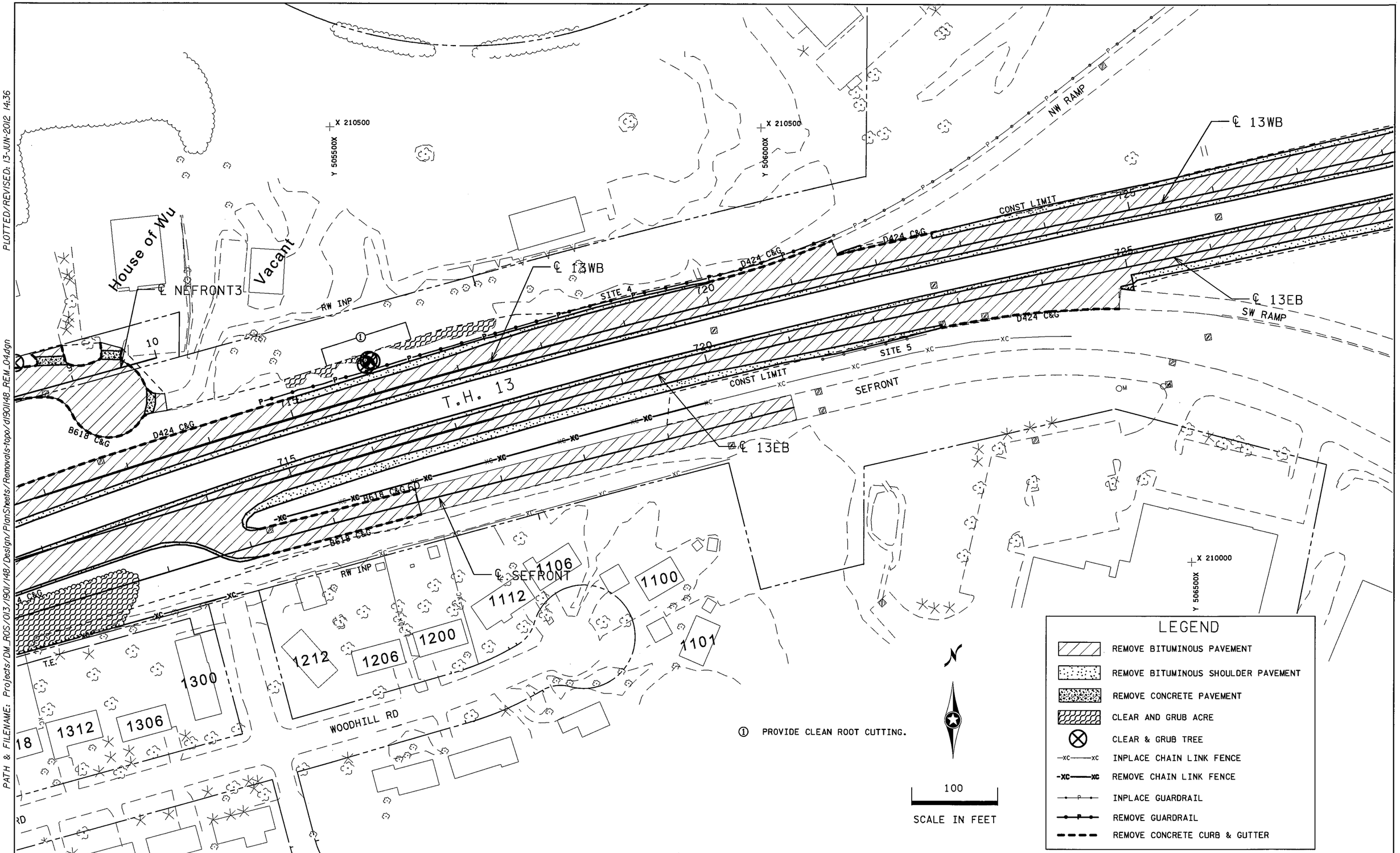

S.P. 179-020-031 S.P. 019-605-028 / SHEET 5 OF 8

INPLACE TOPOGRAPHY & REMOVAL PLANS

DRAWN BY: GLJ	CHECKED BY: HS	CERTIFIED BY LICENSED PROFESSIONAL ENGINEER LIC. NO. 18520 DATE 6/18/12	STATE PROJ. NO. 1901-148 (T.H. 13) SHEET NO. 206 OF 442 SHEETS

PLOTTED/REVISED: 13-JUN-2012 14:36
DISTRICT #: METRO
IPLOT NAME: d1901148_REM_04a
PATH & FILENAME: Projects/DM_ROS/013/1901/148/Design/PlanSheets/Removals-topo/d1901148_REM_04a.dgn

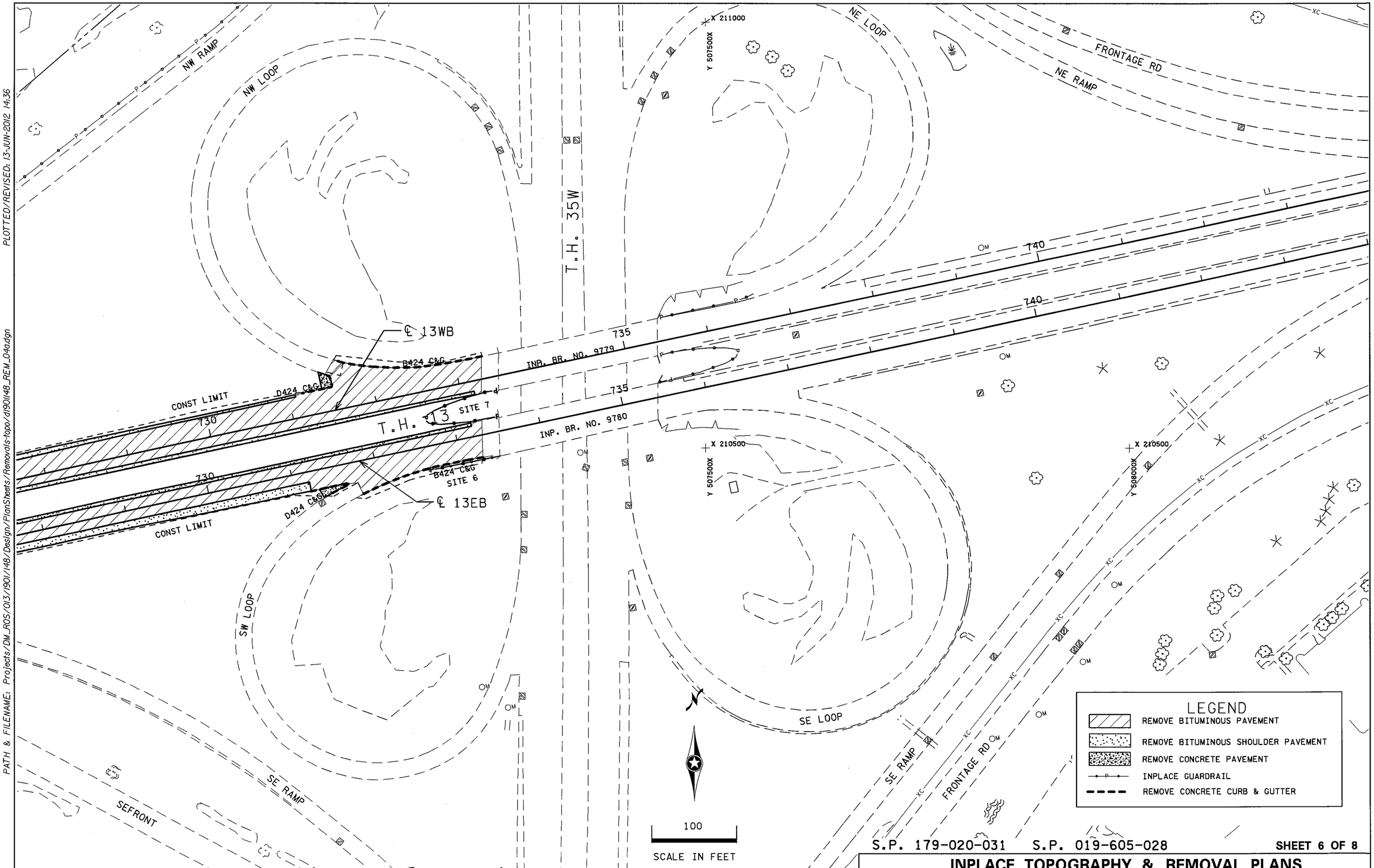

S.P. 179-020-031 S.P. 019-605-028 **SHEET 6 OF 8**

INPLACE TOPOGRAPHY & REMOVAL PLANS

DRAWN BY: GLJ	CHECKED BY: HS	CERTIFIED BY LICENSED PROFESSIONAL ENGINEER LIC. NO. 18520 DATE 6/18/12	STATE PROJ. NO. 1901-148 (T.H. 13) SHEET NO. 207 OF 442 SHEETS

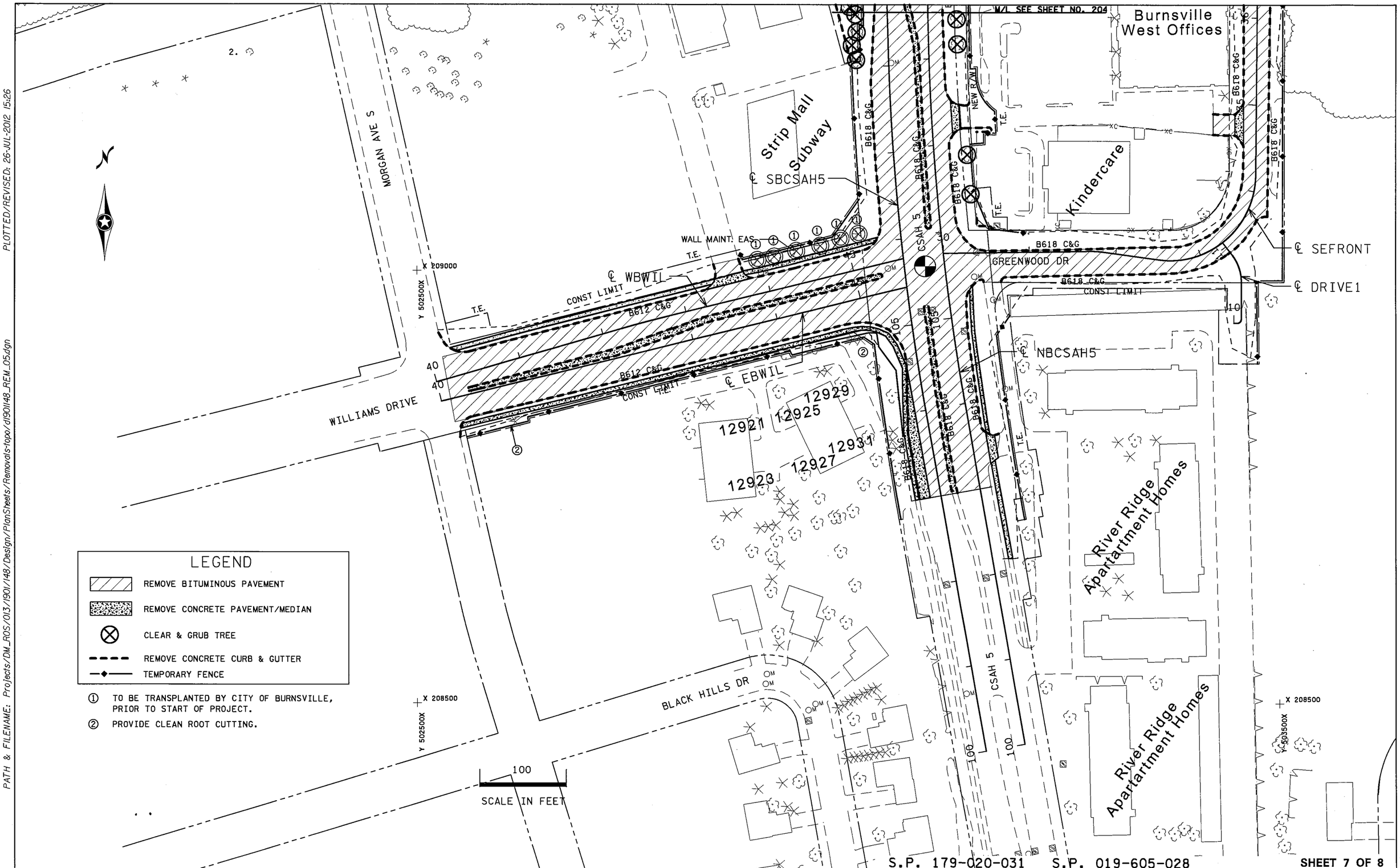

LEGEND

- REMOVE BITUMINOUS PAVEMENT
- REMOVE CONCRETE PAVEMENT/MEDIAN
- CLEAR & GRUB TREE
- REMOVE CONCRETE CURB & GUTTER
- TEMPORARY FENCE

① TO BE TRANSPLANTED BY CITY OF BURNSVILLE, PRIOR TO START OF PROJECT.

② PROVIDE CLEAN ROOT CUTTING.

INPLACE TOPOGRAPHY & REMOVAL PLANS

DRAWN BY: GLJ	CHECKED BY: HS	CERTIFIED BY _____ LICENSED PROFESSIONAL ENGINEER	LIC. NO. 18520 DATE 7/26/12	STATE PROJ. NO. 1901-148 (T.H. 13) SHEET NO. 208 OF 442 SHEETS

PLOTTED/REVISED: 26-JUL-2012 15:26
DISTRICT #: METRO
IPLOT NAME: d1901148_REM_05
PATH & FILENAME: Projects/DM_ROS/013/1901/148/Design/PlanSheets/Removals-topo/d1901148_REM_05.dgn

PLOTTED/REVISED: 13-JUN-2012 14:37

DISTRICT #: METRO
IPLOT NAME: d1901148_REM_06
PATH & FILENAME: Projects/DM_ROS/013/1901/148/Design/PlanSheets/Removals-topo/d1901148_REM_06.dgn

LEGEND

- REMOVE BITUMINOUS PAVEMENT
- REMOVE CONCRETE PAVEMENT/MEDIAN
- CLEAR AND GRUB ACRE
- CLEAR & GRUB TREE
- REMOVE CONCRETE CURB & GUTTER

① PROVIDE CLEAN ROOT CUTTING.

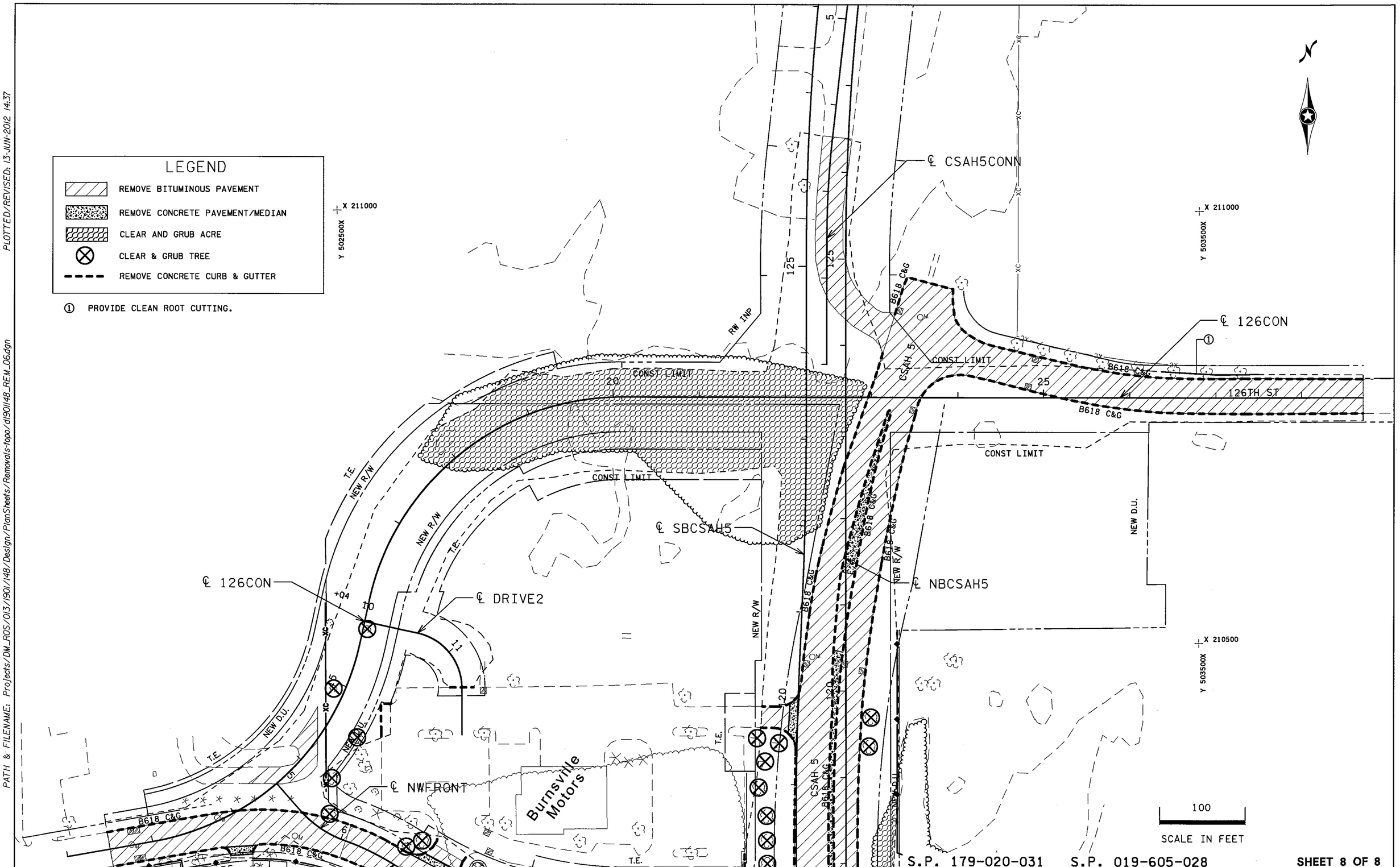

S.P. 179-020-031 S.P. 019-605-028

SHEET 8 OF 8

INPLACE TOPOGRAPHY & REMOVAL PLANS

DRAWN BY: GLJ	CHECKED BY: HS	CERTIFIED BY LICENSED PROFESSIONAL ENGINEER	LIC. NO. 18520 DATE 6/18/12	STATE PROJ. NO. 1901-148 (T.H. 13)	SHEET NO. 209 OF 442 SHEETS

PLOTTED/REVISED: 14-JUN-2012 11:9

DISTRICT #: METRO
IPLOT NAME: d190l148_CP_01
PATH & FILENAME: Projects/DM_ROS/013/1901/148/Design/PlanSheets/Const/d190l148_CP_01.dgn

GENERAL NOTES:

1. FOR CONCRETE PAVING PLANS, SEE SHEET NO. 253 TO 257.
2. FOR SUPERELEVATIONS, SEE SHEET NO. 369 TO 376.
3. FOR BRIDGE APPROACH PANEL DETAILS, SEE SHEET NO. 261 TO 265.
4. PROVIDE 3.0' CURB TRANSITIONS THROUGHOUT ENTIRE PROJECT, INCLUDING GOING FROM A SPECIFIC HEIGHT TO 0".

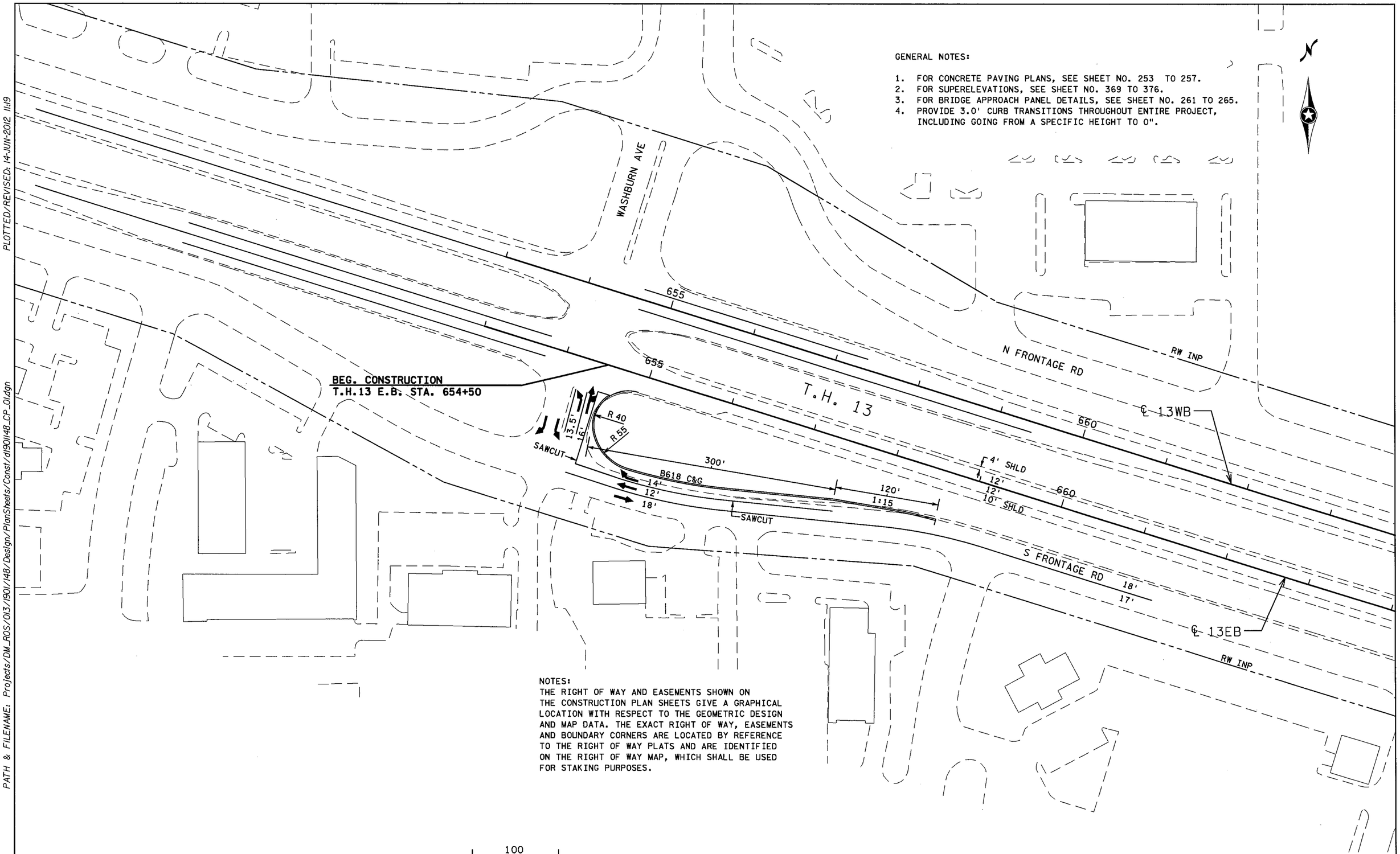

NOTES:
THE RIGHT OF WAY AND EASEMENTS SHOWN ON THE CONSTRUCTION PLAN SHEETS GIVE A GRAPHICAL LOCATION WITH RESPECT TO THE GEOMETRIC DESIGN AND MAP DATA. THE EXACT RIGHT OF WAY, EASEMENTS AND BOUNDARY CORNERS ARE LOCATED BY REFERENCE TO THE RIGHT OF WAY PLATS AND ARE IDENTIFIED ON THE RIGHT OF WAY MAP, WHICH SHALL BE USED FOR STAKING PURPOSES.

100
SCALE IN FEET

S.P. 179-020-031 S.P. 019-605-028

SHEET 1 OF 8

CONSTRUCTION PLANS

DRAWN BY: GLJ	CHECKED BY: HS	CERTIFIED BY LICENSED PROFESSIONAL ENGINEER LIC. NO. 18520 DATE 6/18/12	STATE PROJ. NO. 1901-148 (T.H. 13) SHEET NO. 210 OF 442 SHEETS

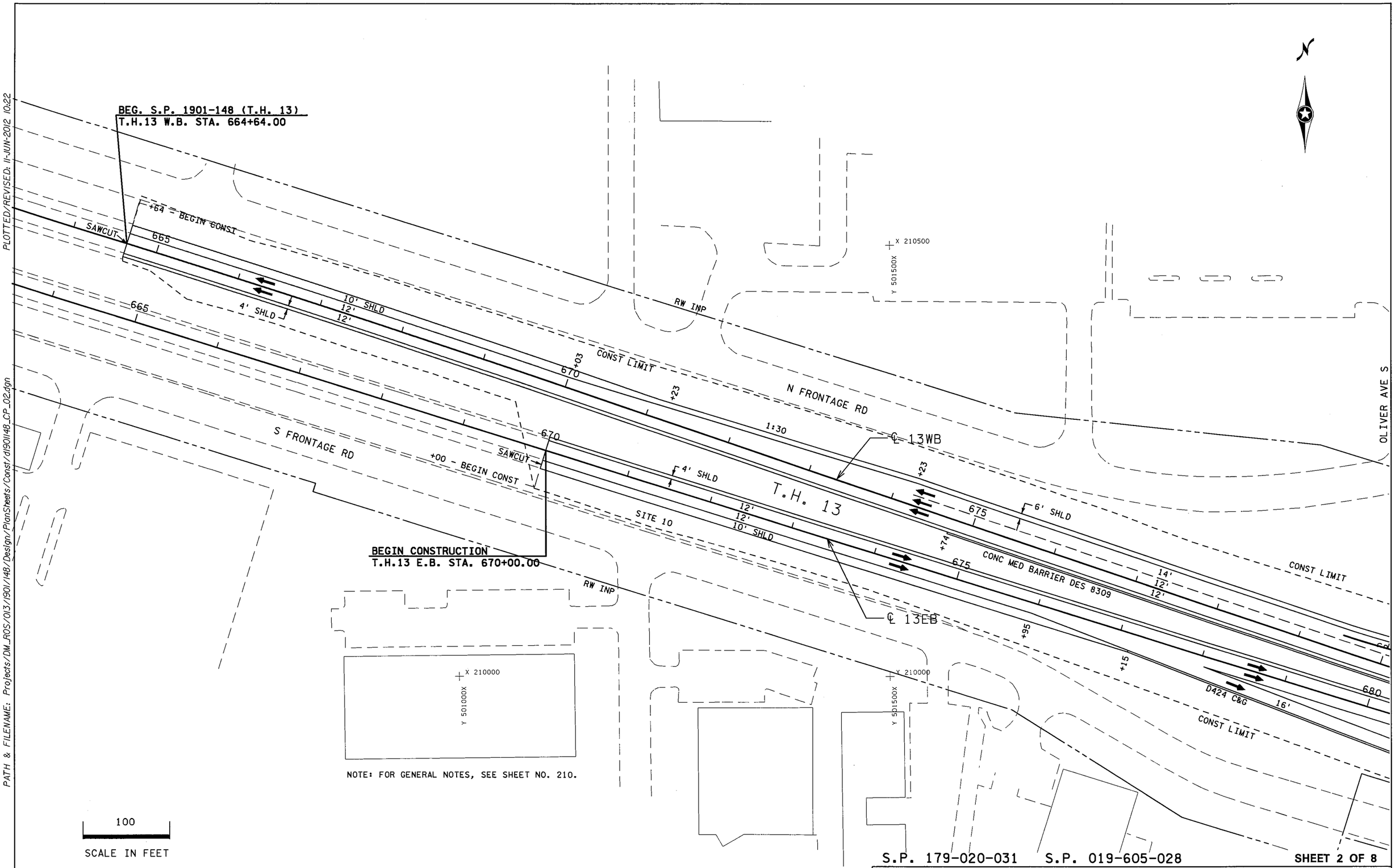

NOTE: FOR GENERAL NOTES, SEE SHEET NO. 210.

S.P. 179-020-031 S.P. 019-605-028

SHEET 2 OF 8

PLOTTED/REVISED: 11-JUN-2012 10:22

DISTRICT #: METRO
IPLOT NAME: d1901148_CP_02
PATH & FILENAME: Projects/DM_ROS/013/1901/148/Design/PlanSheets/Const/d1901148_CP_02.dgn

CONSTRUCTION PLANS

DRAWN BY: GLJ	CHECKED BY: HS	CERTIFIED BY [signature] LICENSED PROFESSIONAL ENGINEER	LIC. NO. 18520	DATE 6/18/12	STATE PROJ. NO. 1901-148 (T.H. 13)	SHEET NO. 211 OF 442 SHEETS

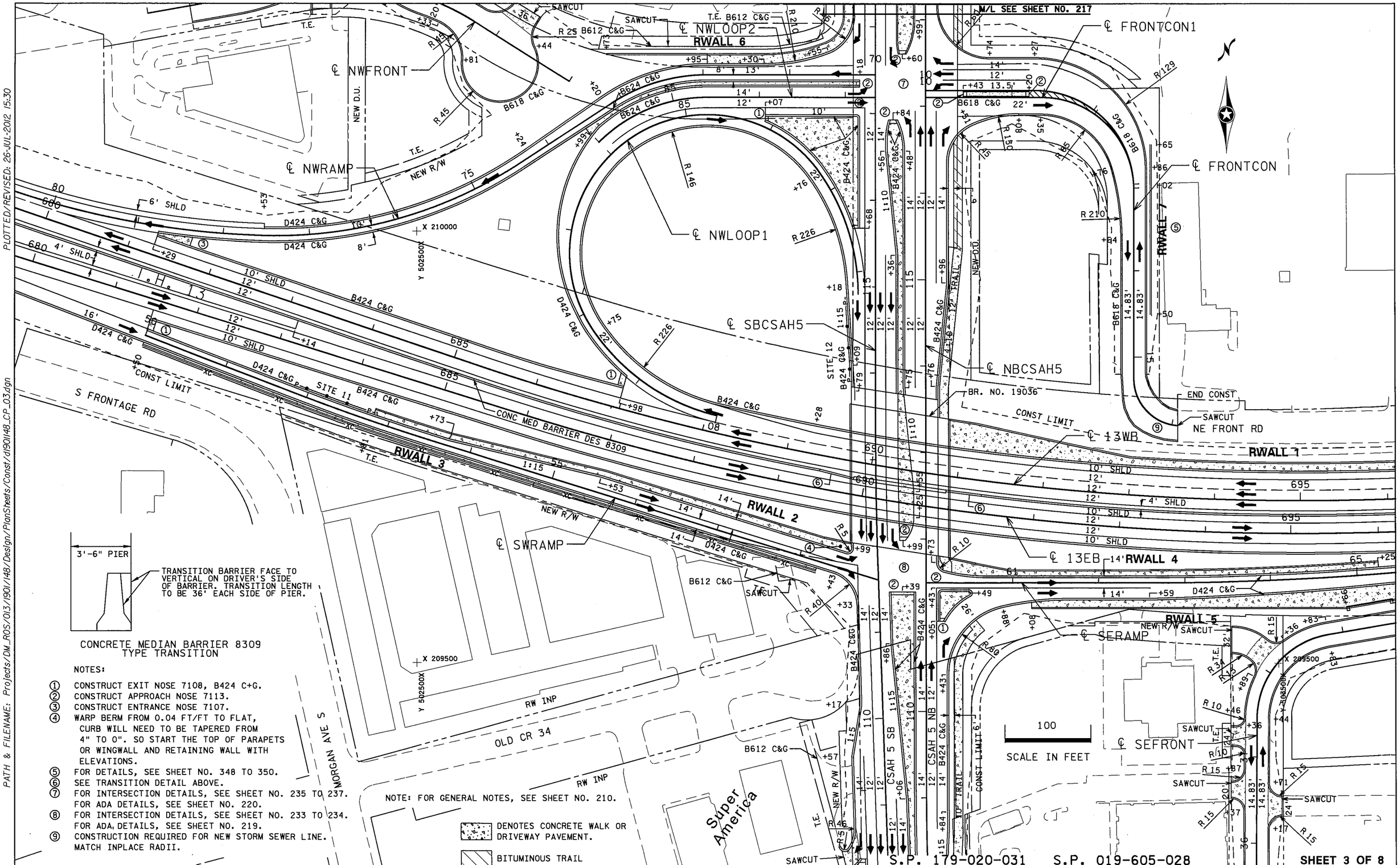

3'-6" PIER

TRANSITION BARRIER FACE TO VERTICAL ON DRIVER'S SIDE OF BARRIER. TRANSITION LENGTH TO BE 36' EACH SIDE OF PIER.

CONCRETE MEDIAN BARRIER 8309
TYPE TRANSITION

NOTES:

1. CONSTRUCT EXIT NOSE 7108, B424 C+G.
2. CONSTRUCT APPROACH NOSE 7113.
3. CONSTRUCT ENTRANCE NOSE 7107.
4. WARP BERM FROM 0.04 FT/FT TO FLAT, CURB WILL NEED TO BE TAPERED FROM 4" TO 0". SO START THE TOP OF PARAPETS OR WINGWALL AND RETAINING WALL WITH ELEVATIONS.
5. FOR DETAILS, SEE SHEET NO. 348 TO 350.
6. SEE TRANSITION DETAIL ABOVE.
7. FOR INTERSECTION DETAILS, SEE SHEET NO. 235 TO 237. FOR ADA DETAILS, SEE SHEET NO. 220.
8. FOR INTERSECTION DETAILS, SEE SHEET NO. 233 TO 234. FOR ADA DETAILS, SEE SHEET NO. 219.
9. CONSTRUCTION REQUIRED FOR NEW STORM SEWER LINE. MATCH INPLACE RADII.

NOTE: FOR GENERAL NOTES, SEE SHEET NO. 210.

DENOTES CONCRETE WALK OR DRIVEWAY PAVEMENT.

BITUMINOUS TRAIL

DISTRICT #: METRO
IPLOT NAME: d1901148_CP_03
PATH & FILENAME: Projects/DM_ROS/013/1901/148/Design/PlanSheets/Const/d1901148_CP_03.dgn
PLOTTED/REVISED: 26-JUL-2012 15:30

CONSTRUCTION PLANS

DRAWN BY: GLJ	CHECKED BY: HS	CERTIFIED BY _____ LICENSED PROFESSIONAL ENGINEER LIC. NO. 18520 DATE 7/26/12	STATE PROJ. NO. 1901-148 (T.H. 13)	SHEET NO. 212 OF 442 SHEETS

PLOTTED/REVISED: 11-JUN-2012 10:22
DISTRICT : METRO
IPLOT NAME: d1901148_CP_04
PATH & FILENAME: Projects/DM_ROS/013/1901/148/Design/PlanSheets/Const/d1901148_CP_04.dgn

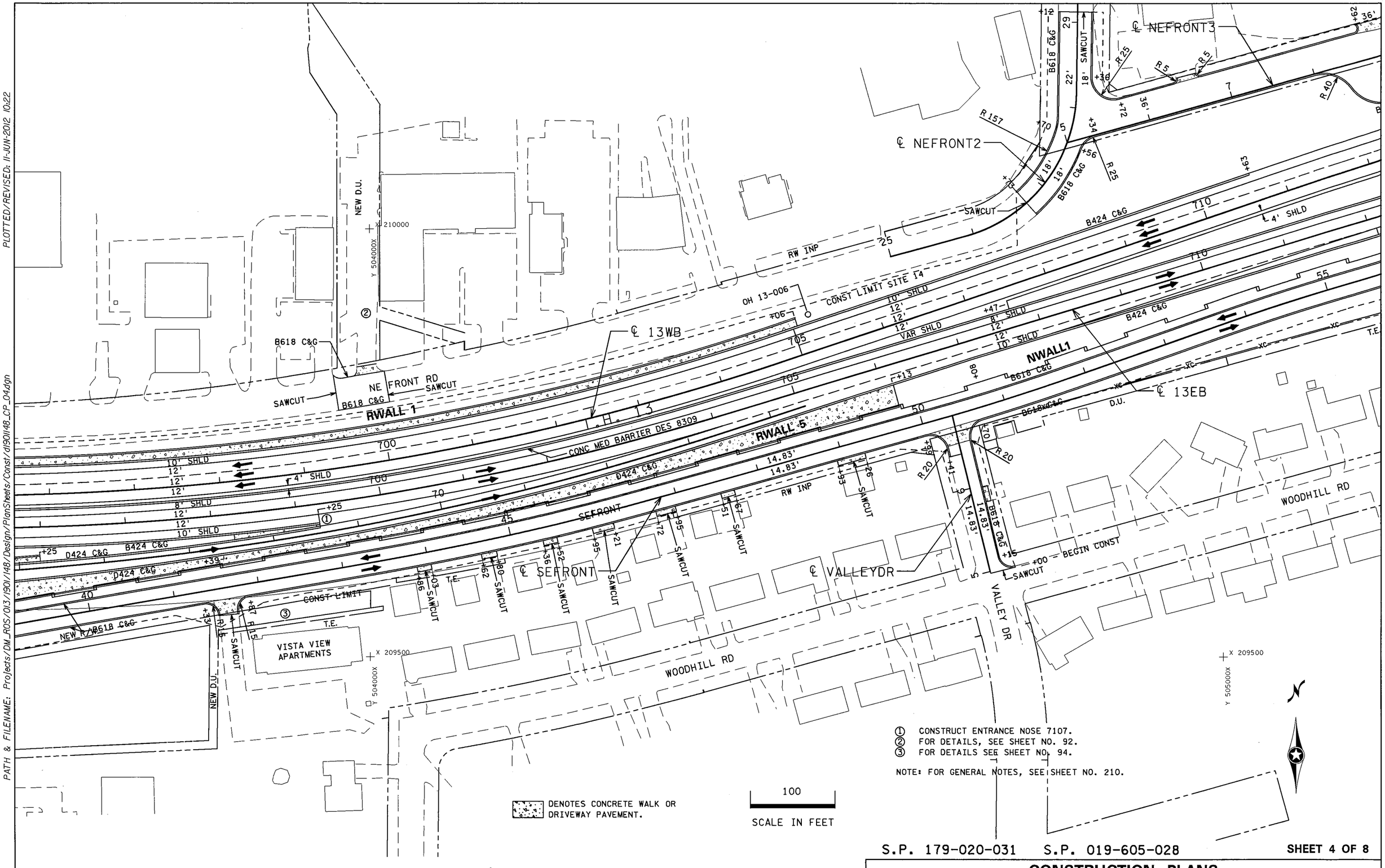

① CONSTRUCT ENTRANCE NOSE 7107.
② FOR DETAILS, SEE SHEET NO. 92.
③ FOR DETAILS SEE SHEET NO. 94.

NOTE: FOR GENERAL NOTES, SEE SHEET NO. 210.

DENOTES CONCRETE WALK OR DRIVEWAY PAVEMENT.

S.P. 179-020-031 S.P. 019-605-028

SHEET 4 OF 8

CONSTRUCTION PLANS

DRAWN BY: GLJ	CHECKED BY: HS	CERTIFIED BY _____ LICENSED PROFESSIONAL ENGINEER	LIC. NO. 18520 DATE 6/18/12	STATE PROJ. NO. 1901-148 (T.H. 13)	SHEET NO. 213 OF 442 SHEETS

PLOTTED/REVISED: 11-JUN-2012 10:22
DISTRICT #: METRO
IPLOT NAME: d1901148_CP_05
PATH & FILENAME: Projects/DM_ROS/013/1901/148/Design/PlanSheets/Const/d1901148_CP_05.dgn

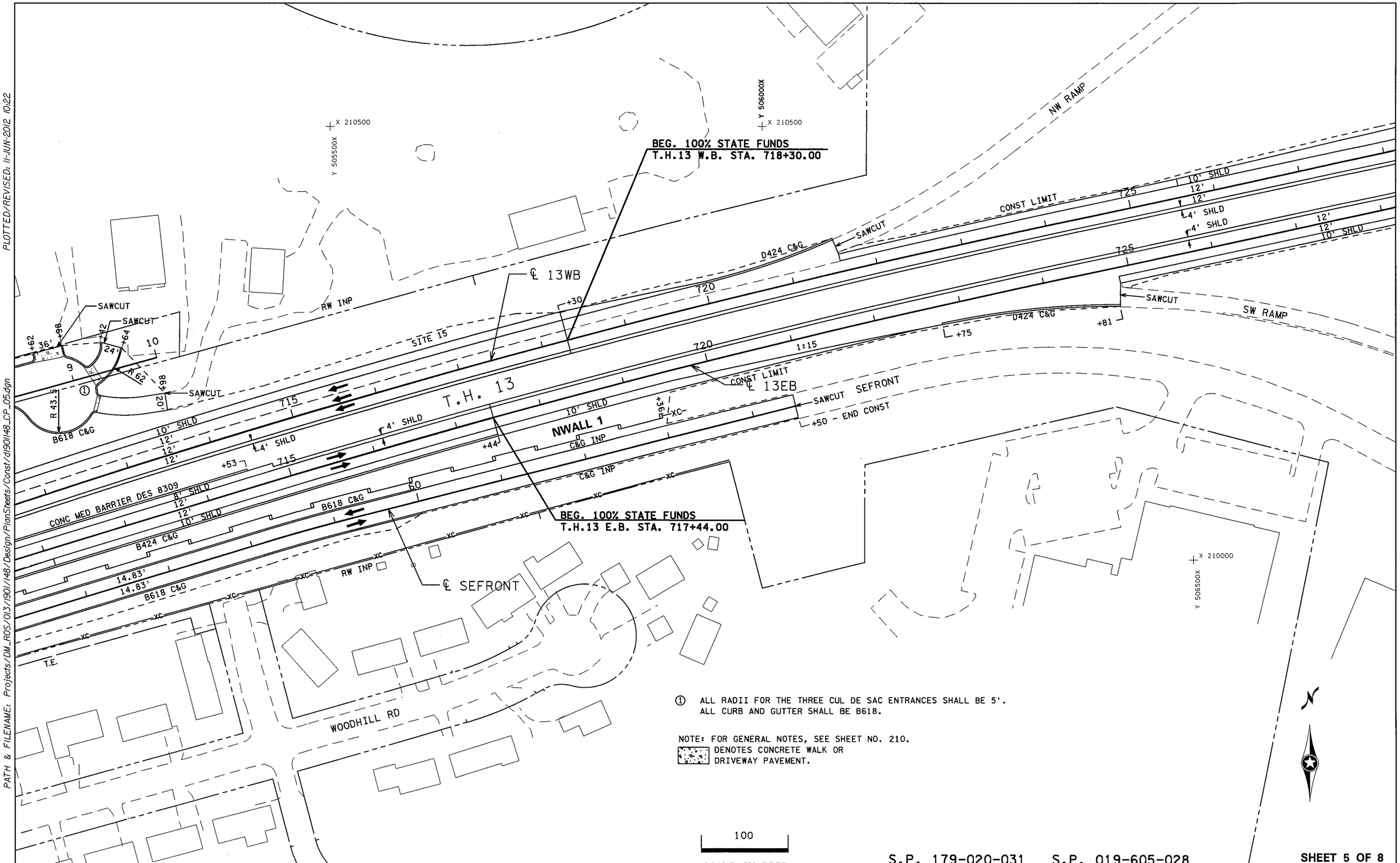

① ALL RADII FOR THE THREE CUL DE SAC ENTRANCES SHALL BE 5'.
ALL CURB AND GUTTER SHALL BE B618.

NOTE: FOR GENERAL NOTES, SEE SHEET NO. 210.
DENOTES CONCRETE WALK OR DRIVEWAY PAVEMENT.

S.P. 179-020-031 S.P. 019-605-028

SHEET 5 OF 8

CONSTRUCTION PLANS

DRAWN BY: GLJ	CHECKED BY: HS	CERTIFIED BY LICENSED PROFESSIONAL ENGINEER LIC. NO. 18520 DATE 6/18/12	STATE PROJ. NO. 1901-148 (T.H. 13)	SHEET NO. 214 OF 442 SHEETS

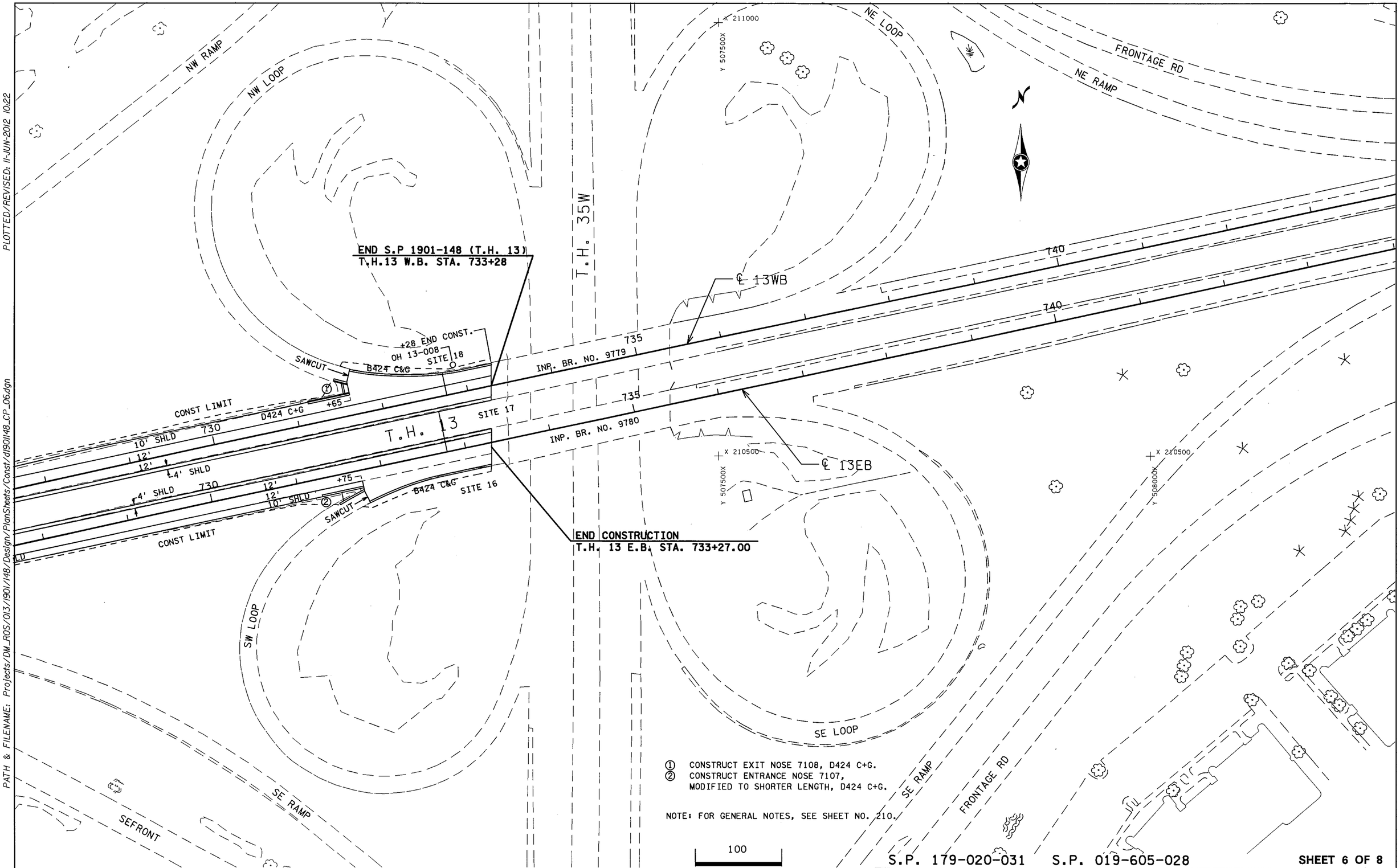

① CONSTRUCT EXIT NOSE 7108, D424 C+G.
② CONSTRUCT ENTRANCE NOSE 7107, MODIFIED TO SHORTER LENGTH, D424 C+G.

NOTE: FOR GENERAL NOTES, SEE SHEET NO. 210.

S.P. 179-020-031 S.P. 019-605-028

SHEET 6 OF 8

CONSTRUCTION PLANS

DRAWN BY: GLJ	CHECKED BY: HS	CERTIFIED BY [signature] LICENSED PROFESSIONAL ENGINEER	LIC. NO. 18520 DATE 6/18/12	STATE PROJ. NO. 1901-148 (T.H. 13)	SHEET NO. 215 OF 442 SHEETS

PLOTTED/REVISED: 11-JUN-2012 10:22

DISTRICT #: METRO
IPLOT NAME: d1901148_CP_06
PATH & FILENAME: Projects/DM_ROS/013/1901/148/Design/PlanSheets/Const/d1901148_CP_06.dgn

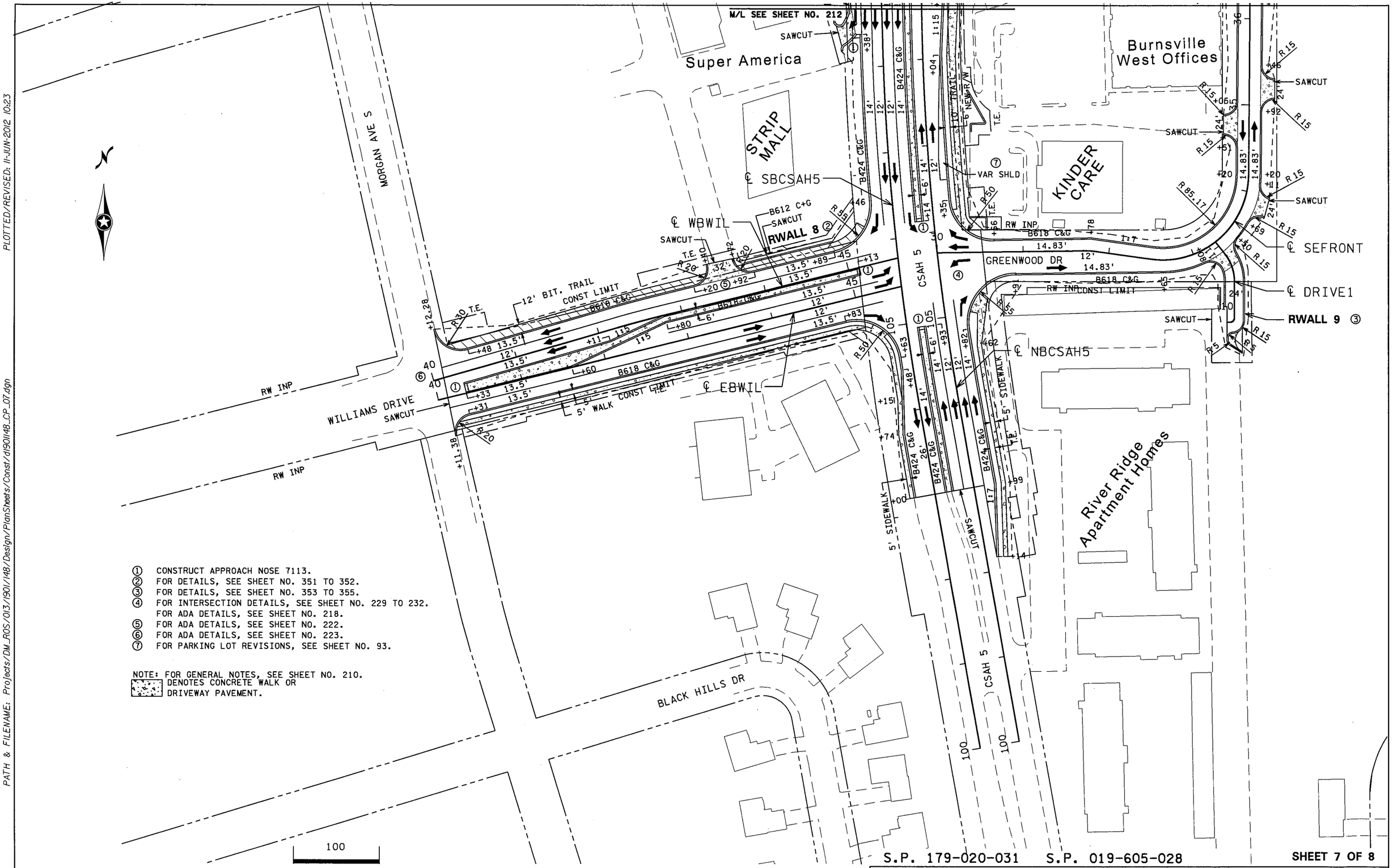

① CONSTRUCT APPROACH NOSE 7113.
② FOR DETAILS, SEE SHEET NO. 351 TO 352.
③ FOR DETAILS, SEE SHEET NO. 353 TO 355.
④ FOR INTERSECTION DETAILS, SEE SHEET NO. 229 TO 232.
FOR ADA DETAILS, SEE SHEET NO. 218.
⑤ FOR ADA DETAILS, SEE SHEET NO. 222.
⑥ FOR ADA DETAILS, SEE SHEET NO. 223.
⑦ FOR PARKING LOT REVISIONS, SEE SHEET NO. 93.

NOTE: FOR GENERAL NOTES, SEE SHEET NO. 210.
DENOTES CONCRETE WALK OR DRIVEWAY PAVEMENT.

SHEET 7 OF 8

CONSTRUCTION PLANS

DRAWN BY: GLJ	CHECKED BY: HS	CERTIFIED BY _____ LICENSED PROFESSIONAL ENGINEER LIC. NO. 18520 DATE 6/18/12	STATE PROJ. NO. 1901-148 (T.H. 13) SHEET NO. 216 OF 442 SHEETS

PLOTTED/REVISED: 11-JUN-2012 10:23
DISTRICT #: METRO
IPLOT NAME: d1901148_CP_07
PATH & FILENAME: Projects/DM_ROS/013/1901/148/Design/PlanSheets/Const/d1901148_CP_07.dgn

PLOTTED/REVISED: 11-JUN-2012 10:23
DISTRICT : METRO
IPLOT NAME: d190ll48_CP_08
PATH & FILENAME: Projects/DM_ROS/013/1901/148/Design/PlanSheets/Const/d190ll48_CP_08.dgn

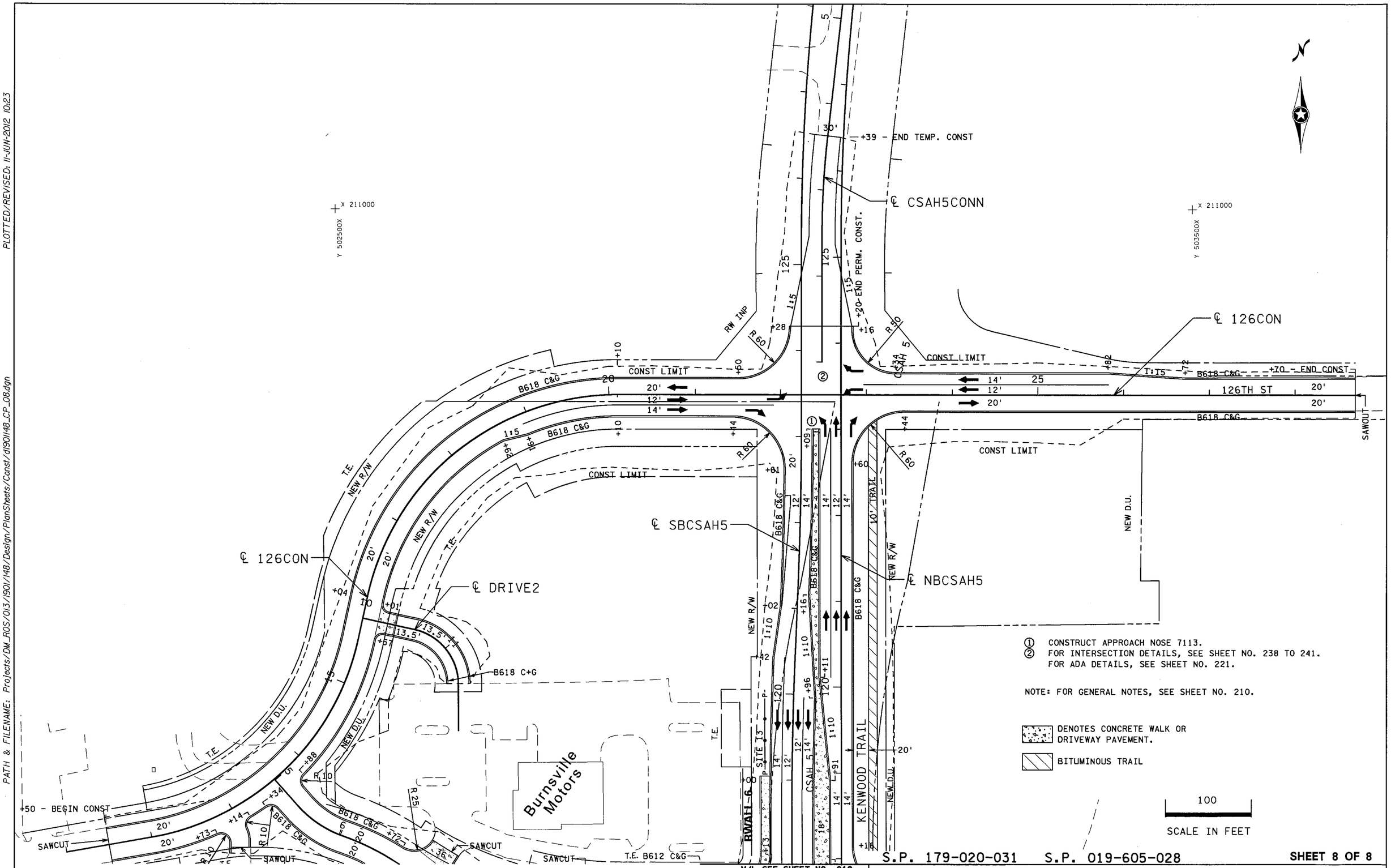

S.P. 179-020-031 S.P. 019-605-028

SHEET 8 OF 8

CONSTRUCTION PLANS

DRAWN BY: GLJ	CHECKED BY: HS	CERTIFIED BY _____ LICENSED PROFESSIONAL ENGINEER	LIC. NO. 18520 DATE 6/18/12	STATE PROJ. NO. 1901-148 (T.H. 13)	SHEET NO. 217 OF 442 SHEETS

NOTES:

- SEE STANDARD PLATE 7038 FOR DETAILS ON DETECTABLE WARNING.
- JOINTS SHALL BE CONSTRUCTED AT ALL GRADE BREAKS.
- TOP OF CURB SHALL MATCH PROPOSED WALK GRADE.
- LANDINGS SHALL BE LOCATED ANYWHERE PEDESTRIAN ACCESS ROUTE CHANGES DIRECTIONS, AND AT THE TOP OF RAMPS WHICH HAVE RUNNING SLOPES GREATER THAN 5.0%.
- LANDINGS SHALL BE CONNECTED TO EXISTING SIDEWALKS MAINTAINING A 4' WIDE (MINIMUM) PEDESTRIAN ACCESS ROUTE WITH CROSS SLOPE THAT DOES NOT EXCEED 2.0%, AND A RUNNING SLOPE THAT DOES NOT EXCEED 5.0%.
- CONTRACTOR SHALL EMPLOY APPROPRIATE METHODS FOR INTERMEDIATE GRADE CONTROL TO ENSURE ALL GRADE BREAKS ARE CONSTRUCTED PROPERLY.
- PROVIDE A SAWCUT AT ALL REMOVAL LIMITS OR REMOVE TO NEAREST JOINT.
- ALL CURB RAMPS AND LANDING AREAS SHALL BE 6" CONCRETE WALK WITH 2" CLASS 6 AGGREGATE BASE PROVIDED FOR RE-ESTABLISHING GRADE UNDER EXISTING WALKS AND RAMPS, AND 4" CLASS 6 AGGREGATE BASE UNDER NEW CONCRETE WALKS AND RAMPS.
- ALL DISTURBED AREAS THAT ARE NOT SHOWN AS CONCRETE WALK SHALL BE GRADED FLUSH WITH NEW CONCRETE WALK AT A 1:6 SLOPE TO MATCH SURROUNDING CONTOURS. SEE TURF ESTABLISHMENT PLAN SHEET NO. 437.

① 1/2" PERFORATED JOINT FILLER MATERIAL AASHTO M213. JOINT FILLER SHALL BE PLACED FLUSH WITH THE BACK OF CURB AND GUTTER. JOINT SHALL BE FREE OF DEBRIS.

② SEE PEDESTRIAN ACCESS ROUTE CURB AND GUTTER DETAIL ON SHEET NO. 226 FOR INFORMATION ON CONSTRUCTING CURB AND GUTTER AT CURB OPENINGS.

③ 4' BY 4' MINIMUM LANDING WITH MAXIMUM 2.0 % SLOPE IN ALL DIRECTIONS.

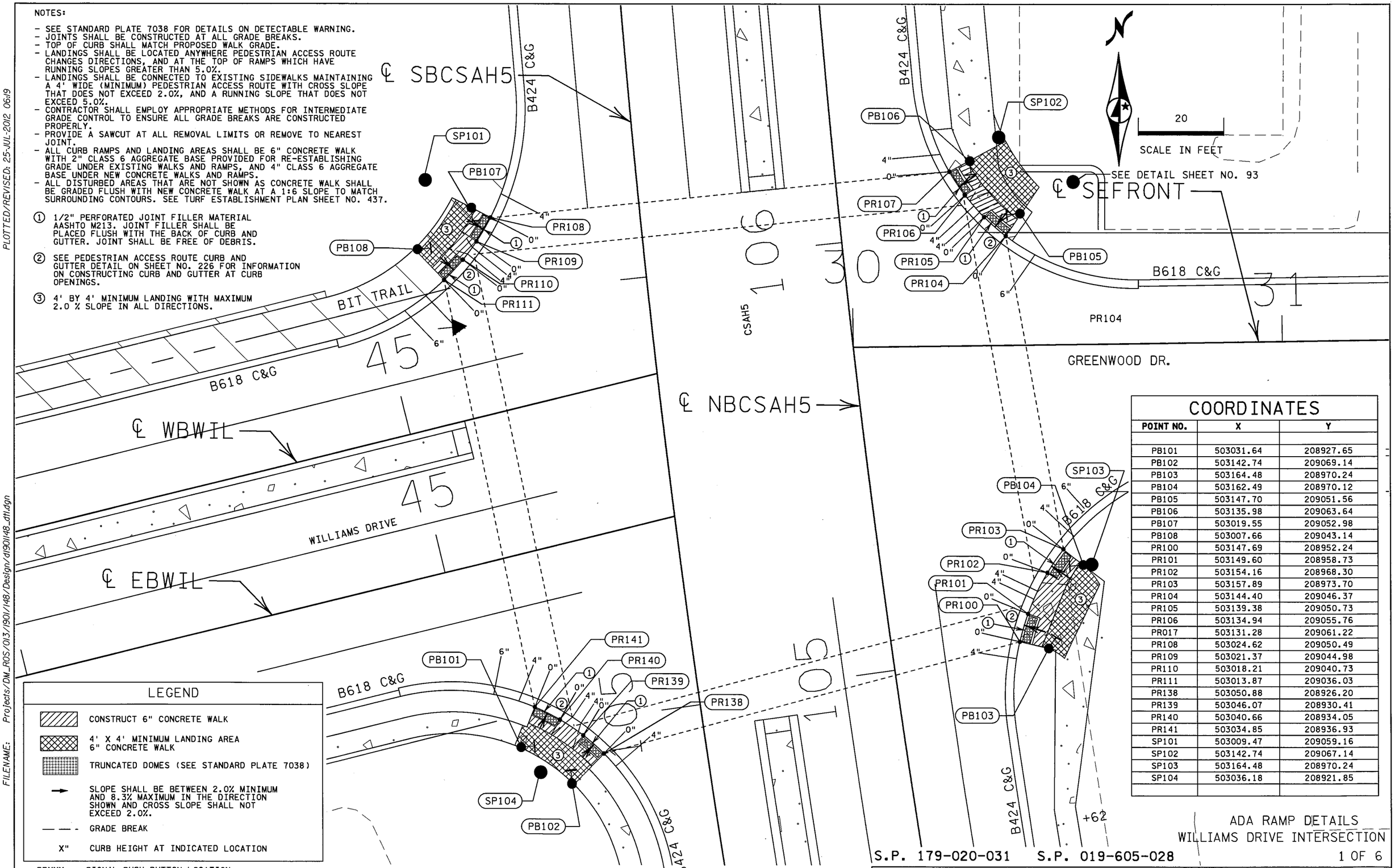

COORDINATES

POINT NO.	X	Y
PB101	503031.64	208927.65
PB102	503142.74	209069.14
PB103	503164.48	208970.24
PB104	503162.49	208970.12
PB105	503147.70	209051.56
PB106	503135.98	209063.64
PB107	503019.55	209052.98
PB108	503007.66	209043.14
PR100	503147.69	208952.24
PR101	503149.60	208958.73
PR102	503154.16	208968.30
PR103	503157.89	208973.70
PR104	503144.40	209046.37
PR105	503139.38	209050.73
PR106	503134.94	209055.76
PR017	503131.28	209061.22
PR108	503024.62	209050.49
PR109	503021.37	209044.98
PR110	503018.21	209040.73
PR111	503013.87	209036.03
PR138	503050.88	208926.20
PR139	503046.07	208930.41
PR140	503040.66	208934.05
PR141	503034.85	208936.93
SP101	503009.47	209059.16
SP102	503142.74	209067.14
SP103	503164.48	208970.24
SP104	503036.18	208921.85

LEGEND

- CONSTRUCT 6" CONCRETE WALK
- 4' X 4' MINIMUM LANDING AREA 6" CONCRETE WALK
- TRUNCATED DOMES (SEE STANDARD PLATE 7038)
- SLOPE SHALL BE BETWEEN 2.0% MINIMUM AND 8.3% MAXIMUM IN THE DIRECTION SHOWN AND CROSS SLOPE SHALL NOT EXCEED 2.0%.
- GRADE BREAK
- X" CURB HEIGHT AT INDICATED LOCATION

PBXXX = SIGNAL PUSH BUTTON LOCATION
SPXXX = SIGNAL POLE LOCATION

ADA RAMP DETAILS
WILLIAMS DRIVE INTERSECTION
1 OF 6

CONSTRUCTION DETAILS

DRAWN BY: MS	CHECKED BY: HS	CERTIFIED BY LICENSED PROFESSIONAL ENGINEER	LIC. NO. 18520 DATE 6/18/12	STATE PROJ. NO. 1901-148 (T.H. 13) SHEET NO. 218 OF 442 SHEETS

PLOTTED/REVISED: 25-JUL-2012 06:19
DISTRICT #: METRO
IPLOT NAME: d1901148_dt12
FILENAME: Projects/DM_ROS/013/1901/148/Design/d1901148_dt1.dgn

PLOTTED/REVISED: 25-JUL-2012 06:18

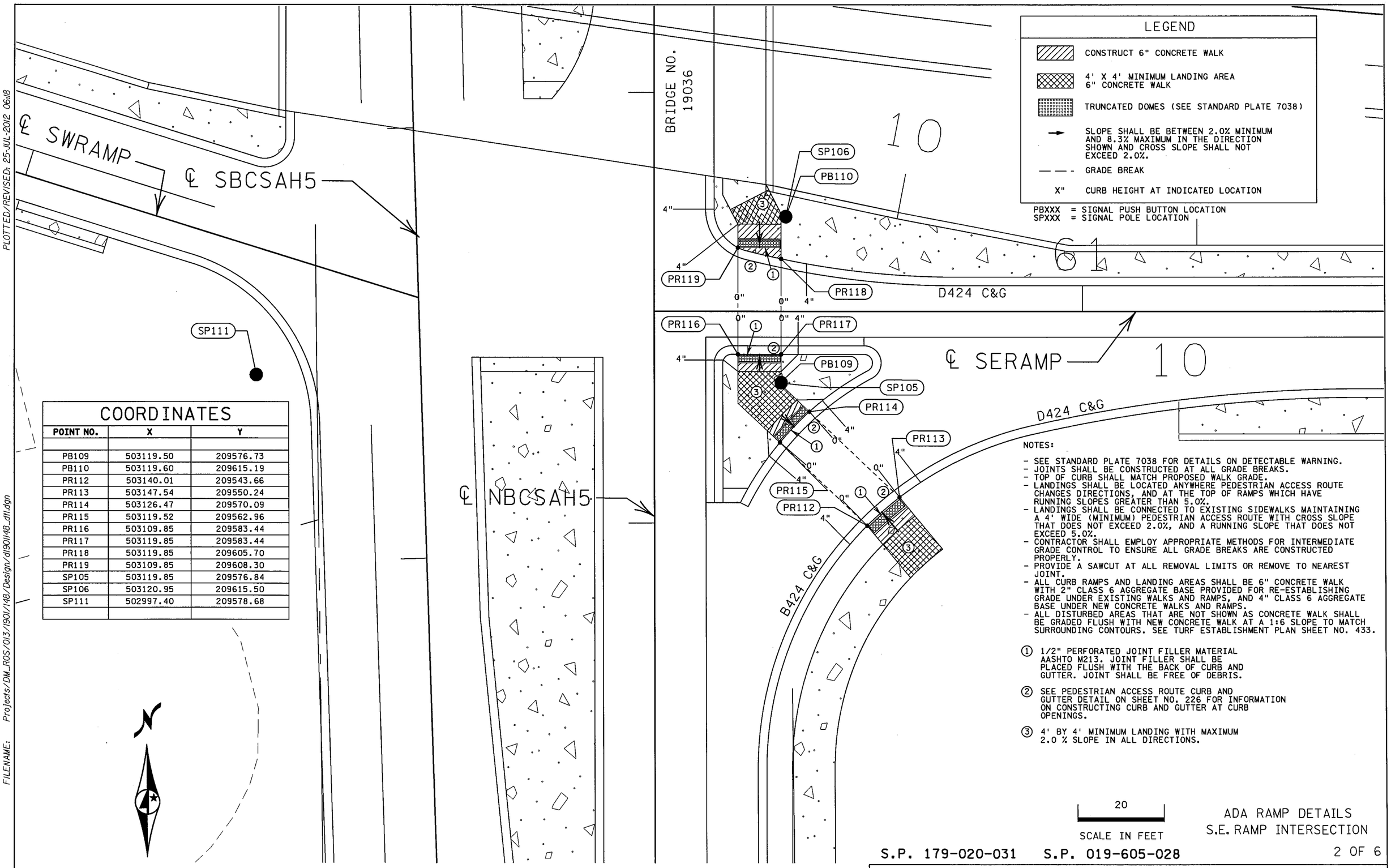

COORDINATES

POINT NO.	X	Y
PB109	503119.50	209576.73
PB110	503119.60	209615.19
PR112	503140.01	209543.66
PR113	503147.54	209550.24
PR114	503126.47	209570.09
PR115	503119.52	209562.96
PR116	503109.85	209583.44
PR117	503119.85	209583.44
PR118	503119.85	209605.70
PR119	503109.85	209608.30
SP105	503119.85	209576.84
SP106	503120.95	209615.50
SP111	502997.40	209578.68

NOTES:

- SEE STANDARD PLATE 7038 FOR DETAILS ON DETECTABLE WARNING.
- JOINTS SHALL BE CONSTRUCTED AT ALL GRADE BREAKS.
- TOP OF CURB SHALL MATCH PROPOSED WALK GRADE.
- LANDINGS SHALL BE LOCATED ANYWHERE PEDESTRIAN ACCESS ROUTE CHANGES DIRECTIONS, AND AT THE TOP OF RAMPS WHICH HAVE RUNNING SLOPES GREATER THAN 5.0%.
- LANDINGS SHALL BE CONNECTED TO EXISTING SIDEWALKS MAINTAINING A 4' WIDE (WINIMUM) PEDESTRIAN ACCESS ROUTE WITH CROSS SLOPE THAT DOES NOT EXCEED 2.0%, AND A RUNNING SLOPE THAT DOES NOT EXCEED 5.0%.
- CONTRACTOR SHALL EMPLOY APPROPRIATE METHODS FOR INTERMEDIATE GRADE CONTROL TO ENSURE ALL GRADE BREAKS ARE CONSTRUCTED PROPERLY.
- PROVIDE A SAWCUT AT ALL REMOVAL LIMITS OR REMOVE TO NEAREST JOINT.
- ALL CURB RAMPS AND LANDING AREAS SHALL BE 6" CONCRETE WALK WITH 2" CLASS 6 AGGREGATE BASE PROVIDED FOR RE-ESTABLISHING GRADE UNDER EXISTING WALKS AND RAMPS, AND 4" CLASS 6 AGGREGATE BASE UNDER NEW CONCRETE WALKS AND RAMPS.
- ALL DISTURBED AREAS THAT ARE NOT SHOWN AS CONCRETE WALK SHALL BE GRADED FLUSH WITH NEW CONCRETE WALK AT A 1:6 SLOPE TO MATCH SURROUNDING CONTOURS. SEE TURF ESTABLISHMENT PLAN SHEET NO. 433.

① 1/2" PERFORATED JOINT FILLER MATERIAL AASHTO M213. JOINT FILLER SHALL BE PLACED FLUSH WITH THE BACK OF CURB AND GUTTER. JOINT SHALL BE FREE OF DEBRIS.

② SEE PEDESTRIAN ACCESS ROUTE CURB AND GUTTER DETAIL ON SHEET NO. 226 FOR INFORMATION ON CONSTRUCTING CURB AND GUTTER AT CURB OPENINGS.

③ 4' BY 4' MINIMUM LANDING WITH MAXIMUM 2.0 % SLOPE IN ALL DIRECTIONS.

ADA RAMP DETAILS
S.E. RAMP INTERSECTION

S.P. 179-020-031 S.P. 019-605-028

2 OF 6

CONSTRUCTION DETAILS

DRAWN BY: MS | CHECKED BY: HS | CERTIFIED BY _____ LICENSED PROFESSIONAL ENGINEER | LIC. NO. 18520 DATE 6/18/12

STATE PROJ. NO. 1901-148 (T.H. 13) SHEET NO. 219 OF 442 SHEETS

DISTRICT #: METRO
IPLOT NAME: d190l148_dtl1
FILENAME: Projects/DM_ROS/013/190l/148/Design/d190l148_dtl.dgn

NOTES:

- SEE STANDARD PLATE 7038 FOR DETAILS ON DETECTABLE WARNING.
- JOINTS SHALL BE CONSTRUCTED AT ALL GRADE BREAKS.
- TOP OF CURB SHALL MATCH PROPOSED WALK GRADE.
- LANDINGS SHALL BE LOCATED ANYWHERE PEDESTRIAN ACCESS ROUTE CHANGES DIRECTIONS, AND AT THE TOP OF RAMPS WHICH HAVE RUNNING SLOPES GREATER THAN 5.0%.
- LANDINGS SHALL BE CONNECTED TO EXISTING SIDEWALKS MAINTAINING A 4' WIDE (MINIMUM) PEDESTRIAN ACCESS ROUTE WITH CROSS SLOPE THAT DOES NOT EXCEED 2.0%, AND A RUNNING SLOPE THAT DOES NOT EXCEED 5.0%.
- CONTRACTOR SHALL EMPLOY APPROPRIATE METHODS FOR INTERMEDIATE GRADE CONTROL TO ENSURE ALL GRADE BREAKS ARE CONSTRUCTED PROPERLY.
- PROVIDE A SAWCUT AT ALL REMOVAL LIMITS OR REMOVE TO NEAREST JOINT.
- ALL CURB RAMPS AND LANDING AREAS SHALL BE 6" CONCRETE WALK WITH 2" CLASS 6 AGGREGATE BASE PROVIDED FOR RE-ESTABLISHING GRADE UNDER EXISTING WALKS AND RAMPS, AND 4" CLASS 6 AGGREGATE BASE UNDER NEW CONCRETE WALKS AND RAMPS.
- ALL DISTURBED AREAS THAT ARE NOT SHOWN AS CONCRETE WALK SHALL BE GRADED FLUSH WITH NEW CONCRETE WALK AT A 1:6 SLOPE TO MATCH SURROUNDING CONTOURS. SEE TURF ESTABLISHMENT PLAN SHEET NO. 433.

① 1/2" PERFORATED JOINT FILLER MATERIAL AASHTO M213. JOINT FILLER SHALL BE PLACED FLUSH WITH THE BACK OF CURB AND GUTTER. JOINT SHALL BE FREE OF DEBRIS.

② SEE PEDESTRIAN ACCESS ROUTE CURB AND GUTTER DETAIL ON SHEET NO. 226 FOR INFORMATION ON CONSTRUCTING CURB AND GUTTER AT CURB OPENINGS.

③ 4' BY 4' MINIMUM LANDING WITH MAXIMUM 2.0 % SLOPE IN ALL DIRECTIONS.

④ IF RAMP SLOPE IS LESS THAN 5.0% NO LANDING AREA IS REQUIRED.

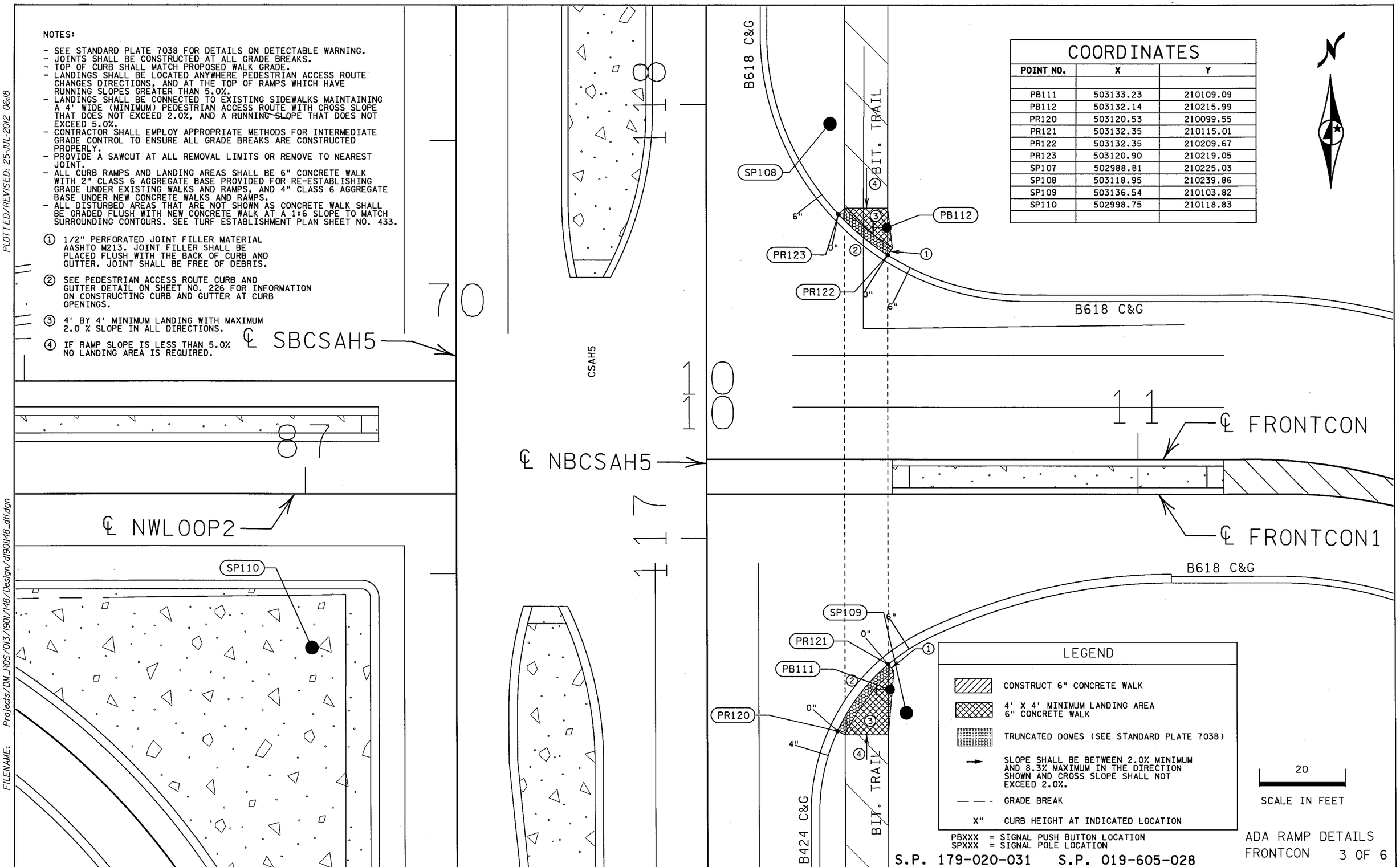

COORDINATES		
POINT NO.	X	Y
PB111	503133.23	210109.09
PB112	503132.14	210215.99
PR120	503120.53	210099.55
PR121	503132.35	210115.01
PR122	503132.35	210209.67
PR123	503120.90	210219.05
SP107	502988.81	210225.03
SP108	503118.95	210239.86
SP109	503136.54	210103.82
SP110	502998.75	210118.83

S.P. 179-020-031 S.P. 019-605-028

ADA RAMP DETAILS
FRONTCON 3 OF 6

CONSTRUCTION DETAILS

DRAWN BY: MS | CHECKED BY: HS | CERTIFIED BY _____ LICENSED PROFESSIONAL ENGINEER | LIC. NO. 18520 DATE 6/18/12

STATE PROJ. NO. 1901-148 (T.H. 13) SHEET NO. 220 OF 442 SHEETS

PLOTTED/REVISED: 25-JUL-2012 06:18
DISTRICT #: METRO
IPLOT NAME: d1901148_dtl
FILENAME: Projects/DM_ROS/013/1901/148/Design/d1901148_dtl.dgn

PLOTTED/REVISED: 25-JUL-2012 06:19

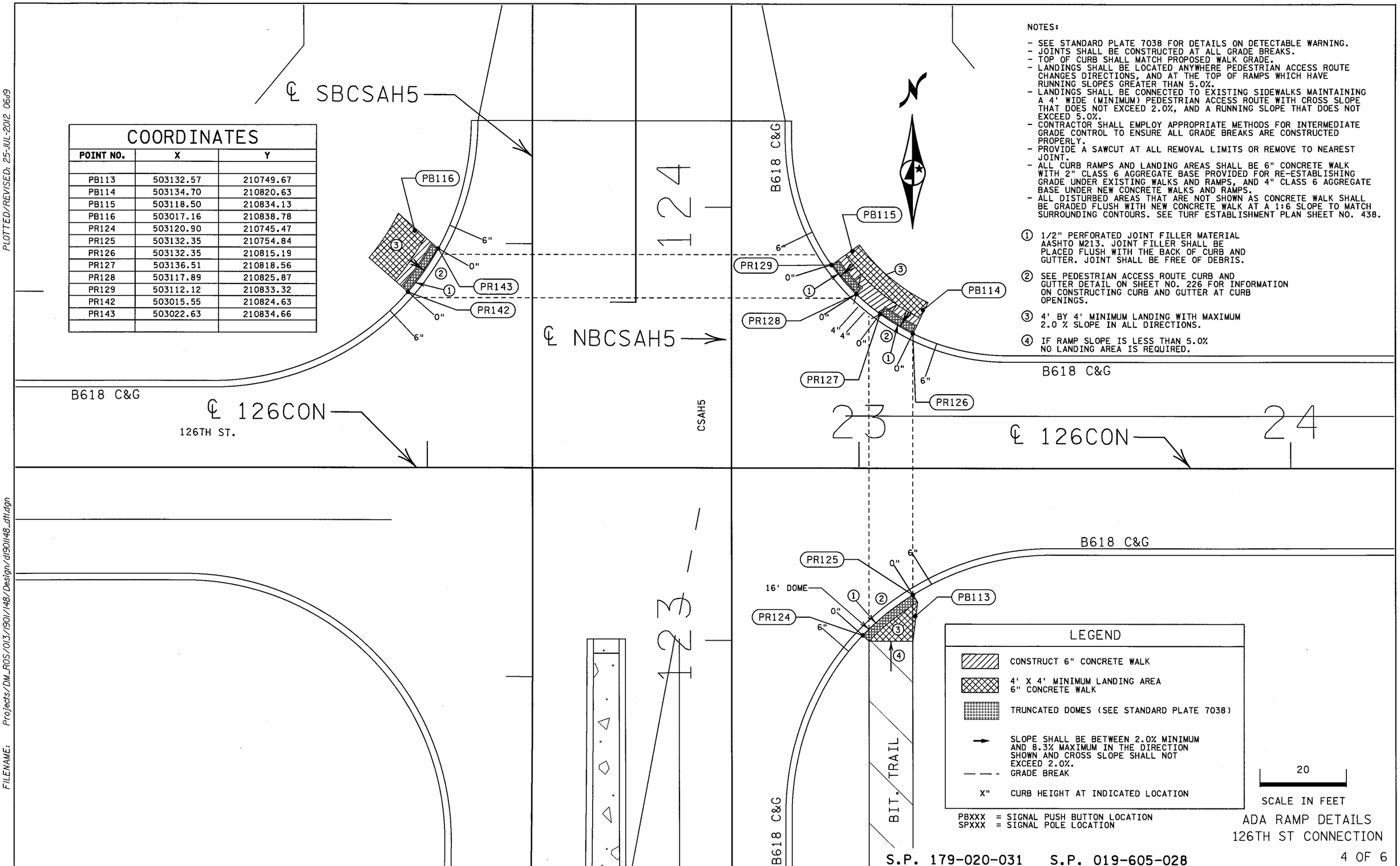

COORDINATES		
POINT NO.	X	Y
PB113	503132.57	210749.67
PB114	503134.70	210820.63
PB115	503118.50	210834.13
PB116	503017.16	210838.78
PR124	503120.90	210745.47
PR125	503132.35	210754.84
PR126	503132.35	210815.19
PR127	503136.51	210818.56
PR128	503117.89	210825.87
PR129	503112.12	210833.32
PR142	503015.55	210824.63
PR143	503022.63	210834.66

NOTES:

- SEE STANDARD PLATE 7038 FOR DETAILS ON DETECTABLE WARNING.
- JOINTS SHALL BE CONSTRUCTED AT ALL GRADE BREAKS.
- TOP OF CURB SHALL MATCH PROPOSED WALK GRADE.
- LANDINGS SHALL BE LOCATED ANYWHERE PEDESTRIAN ACCESS ROUTE CHANGES DIRECTIONS, AND AT THE TOP OF RAMPS WHICH HAVE RUNNING SLOPES GREATER THAN 5.0%.
- LANDINGS SHALL BE CONNECTED TO EXISTING SIDEWALKS MAINTAINING A 4' WIDE (MINIMUM) PEDESTRIAN ACCESS ROUTE WITH CROSS SLOPE THAT DOES NOT EXCEED 2.0%, AND A RUNNING SLOPE THAT DOES NOT EXCEED 5.0%.
- CONTRACTOR SHALL EMPLOY APPROPRIATE METHODS FOR INTERMEDIATE GRADE CONTROL TO ENSURE ALL GRADE BREAKS ARE CONSTRUCTED PROPERLY.
- PROVIDE A SAWCUT AT ALL REMOVAL LIMITS OR REMOVE TO NEAREST JOINT.
- ALL CURB RAMPS AND LANDING AREAS SHALL BE 6" CONCRETE WALK WITH 2" CLASS 6 AGGREGATE BASE PROVIDED FOR RE-ESTABLISHING GRADE UNDER EXISTING WALKS AND RAMPS, AND 4" CLASS 6 AGGREGATE BASE UNDER NEW CONCRETE WALKS AND RAMPS.
- ALL DISTURBED AREAS THAT ARE NOT SHOWN AS CONCRETE WALK SHALL BE GRADED FLUSH WITH NEW CONCRETE WALK AT A 1:6 SLOPE TO MATCH SURROUNDING CONTOURS. SEE TURF ESTABLISHMENT PLAN SHEET NO. 438.

① 1/2" PERFORATED JOINT FILLER MATERIAL AASHTO M213. JOINT FILLER SHALL BE PLACED FLUSH WITH THE BACK OF CURB AND GUTTER. JOINT SHALL BE FREE OF DEBRIS.

② SEE PEDESTRIAN ACCESS ROUTE CURB AND GUTTER DETAIL ON SHEET NO. 226 FOR INFORMATION ON CONSTRUCTING CURB AND GUTTER AT CURB OPENINGS.

③ 4' BY 4' MINIMUM LANDING WITH MAXIMUM 2.0 % SLOPE IN ALL DIRECTIONS.

④ IF RAMP SLOPE IS LESS THAN 5.0% NO LANDING AREA IS REQUIRED.

LEGEND

- CONSTRUCT 6" CONCRETE WALK
- 4' X 4' MINIMUM LANDING AREA 6" CONCRETE WALK
- TRUNCATED DOMES (SEE STANDARD PLATE 7038)
- SLOPE SHALL BE BETWEEN 2.0% MINIMUM AND 8.3% MAXIMUM IN THE DIRECTION SHOWN AND CROSS SLOPE SHALL NOT EXCEED 2.0%.
- GRADE BREAK
- X" CURB HEIGHT AT INDICATED LOCATION

PBXXX = SIGNAL PUSH BUTTON LOCATION
SPXXX = SIGNAL POLE LOCATION

20
SCALE IN FEET

ADA RAMP DETAILS
126TH ST CONNECTION

S.P. 179-020-031 S.P. 019-605-028

4 OF 6

DISTRICT #: METRO
IPLOT NAME: d1901148_dt13
FILENAME: Projects/DM_ROS/013/1901/148/Design/d1901148_dt1.dgn

DRAWN BY: MS	CHECKED BY: HS	CERTIFIED BY LICENSED PROFESSIONAL ENGINEER	LIC. NO. 18520 DATE 6/18/12	CONSTRUCTION DETAILS

STATE PROJ. NO. 1901-148 (T.H. 13) SHEET NO. 221 OF 442 SHEETS

NOTES:

- SEE STANDARD PLATE 7038 FOR DETAILS ON DETECTABLE WARNING.
- JOINTS SHALL BE CONSTRUCTED AT ALL GRADE BREAKS.
- TOP OF CURB SHALL MATCH PROPOSED WALK GRADE.
- LANDINGS SHALL BE LOCATED ANYWHERE PEDESTRIAN ACCESS ROUTE CHANGES DIRECTIONS, AND AT THE TOP OF RAMPS WHICH HAVE RUNNING SLOPES GREATER THAN 5.0%.
- LANDINGS SHALL BE CONNECTED TO EXISTING SIDEWALKS MAINTAINING A 4' WIDE (MINIMUM) PEDESTRIAN ACCESS ROUTE WITH CROSS SLOPE THAT DOES NOT EXCEED 2.0%, AND A RUNNING SLOPE THAT DOES NOT EXCEED 5.0%.
- CONTRACTOR SHALL EMPLOY APPROPRIATE METHODS FOR INTERMEDIATE GRADE CONTROL TO ENSURE ALL GRADE BREAKS ARE CONSTRUCTED PROPERLY.
- PROVIDE A SAWCUT AT ALL REMOVAL LIMITS OR REMOVE TO NEAREST JOINT.
- ALL CURB RAMPS AND LANDING AREAS SHALL BE 6" CONCRETE WALK WITH 2" CLASS 6 AGGREGATE BASE PROVIDED FOR RE-ESTABLISHING GRADE UNDER EXISTING WALKS AND RAMPS, AND 4" CLASS 6 AGGREGATE BASE UNDER NEW CONCRETE WALKS AND RAMPS.
- ALL DISTURBED AREAS THAT ARE NOT SHOWN AS CONCRETE WALK SHALL BE GRADED FLUSH WITH NEW CONCRETE WALK AT A 1:6 SLOPE TO MATCH SURROUNDING CONTOURS. SEE TURF ESTABLISHMENT PLAN SHEET NO. 437.

① 1/2" PERFORATED JOINT FILLER MATERIAL AASHTO M213. JOINT FILLER SHALL BE PLACED FLUSH WITH THE BACK OF CURB AND GUTTER. JOINT SHALL BE FREE OF DEBRIS.

② SEE PEDESTRIAN ACCESS ROUTE CURB AND GUTTER DETAIL ON SHEET NO. 226 FOR INFORMATION ON CONSTRUCTING CURB AND GUTTER AT CURB OPENINGS.

③ 4' BY 4' MINIMUM LANDING WITH MAXIMUM 2.0 % SLOPE IN ALL DIRECTIONS.

④ IF RAMP SLOPE IS LESS THAN 5.0% NO LANDING AREA IS REQUIRED.

COORDINATES		
POINT NO.	X	Y
PR130	502887.10	208998.92
PR131	502876.56	209004.38
PR132	502839.07	208994.17
PR133	502832.22	208985.05

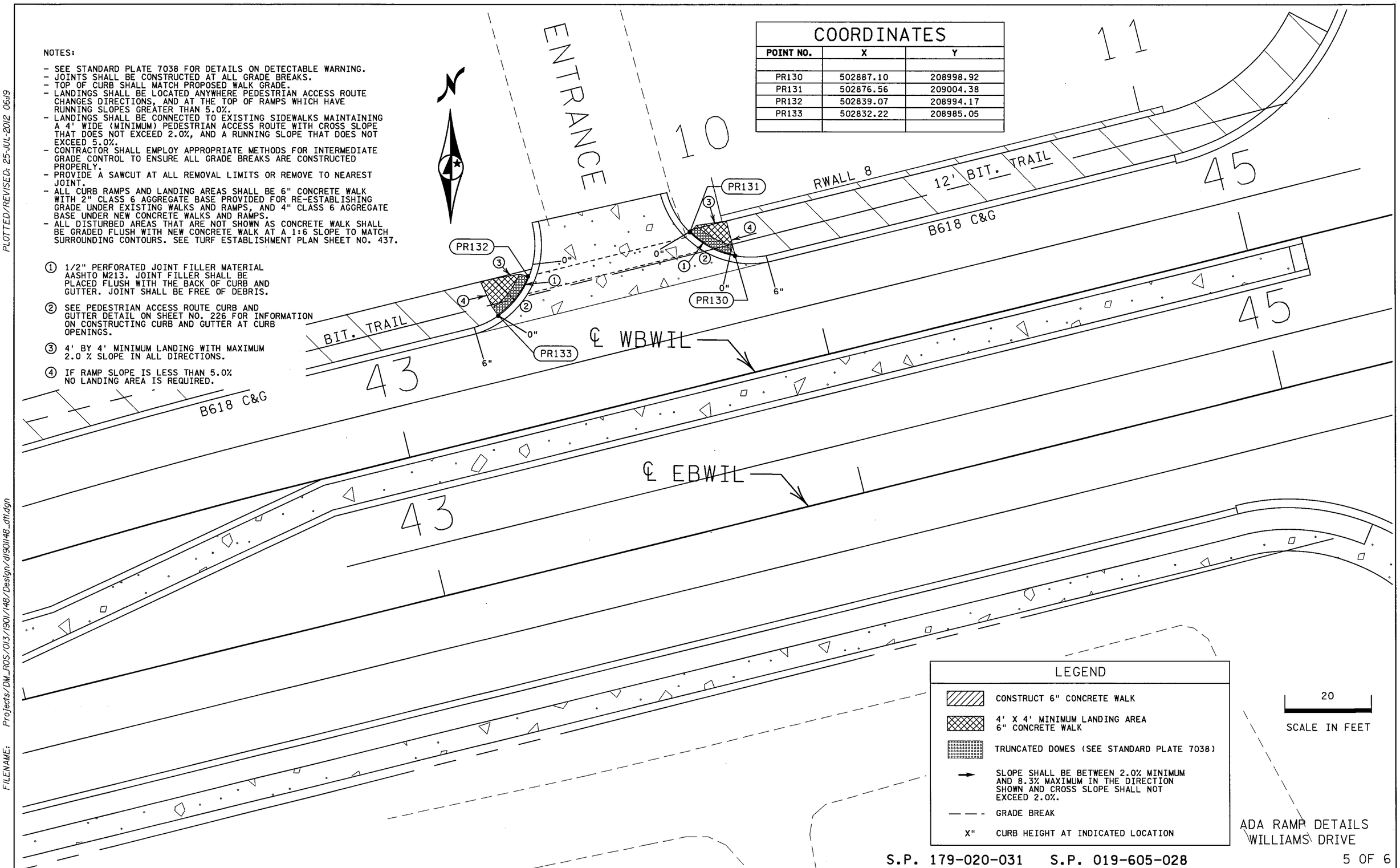

ADA RAMP DETAILS
WILLIAMS DRIVE

S.P. 179-020-031 S.P. 019-605-028

5 OF 6

CONSTRUCTION DETAILS

DRAWN BY: MS | CHECKED BY: HS | CERTIFIED BY _____ LICENSED PROFESSIONAL ENGINEER | LIC. NO. 18520 DATE 6/18/12

STATE PROJ. NO. 1901-148 (T.H. 13) SHEET NO. 222 OF 442 SHEETS

PLOTTED/REVISED: 25-JUL-2012 06:19

DISTRICT #: METRO
IPLOT NAME: d190l148_dtl4
FILENAME: Projects/DM_ROS/013/1901/148/Design/d190l148_dtl.dgn

NOTES:

- SEE STANDARD PLATE 7038 FOR DETAILS ON DETECTABLE WARNING.
- JOINTS SHALL BE CONSTRUCTED AT ALL GRADE BREAKS.
- TOP OF CURB SHALL MATCH PROPOSED WALK GRADE.
- LANDINGS SHALL BE LOCATED ANYWHERE PEDESTRIAN ACCESS ROUTE CHANGES DIRECTIONS, AND AT THE TOP OF RAMPS WHICH HAVE RUNNING SLOPES GREATER THAN 5.0%.
- LANDINGS SHALL BE CONNECTED TO EXISTING SIDEWALKS MAINTAINING A 4' WIDE (MINIMUM) PEDESTRIAN ACCESS ROUTE WITH CROSS SLOPE THAT DOES NOT EXCEED 2.0%, AND A RUNNING SLOPE THAT DOES NOT EXCEED 5.0%.
- CONTRACTOR SHALL EMPLOY APPROPRIATE METHODS FOR INTERMEDIATE GRADE CONTROL TO ENSURE ALL GRADE BREAKS ARE CONSTRUCTED PROPERLY.
- PROVIDE A SAWCUT AT ALL REMOVAL LIMITS OR REMOVE TO NEAREST JOINT.
- ALL CURB RAMPS AND LANDING AREAS SHALL BE 6" CONCRETE WALK WITH 2" CLASS 6 AGGREGATE BASE PROVIDED FOR RE-ESTABLISHING GRADE UNDER EXISTING WALKS AND RAMPS, AND 4" CLASS 6 AGGREGATE BASE UNDER NEW CONCRETE WALKS AND RAMPS.
- ALL DISTURBED AREAS THAT ARE NOT SHOWN AS CONCRETE WALK SHALL BE GRADED FLUSH WITH NEW CONCRETE WALK AT A 1:6 SLOPE TO MATCH SURROUNDING CONTOURS. SEE TURF ESTABLISHMENT PLAN SHEET NO. 437.

① 1/2" PERFORATED JOINT FILLER MATERIAL AASHTO M213. JOINT FILLER SHALL BE PLACED FLUSH WITH THE BACK OF CURB AND GUTTER. JOINT SHALL BE FREE OF DEBRIS.

② SEE PEDESTRIAN ACCESS ROUTE CURB AND GUTTER DETAIL ON SHEET NO. 226 FOR INFORMATION ON CONSTRUCTING CURB AND GUTTER AT CURB OPENINGS.

③ 4' BY 4' MINIMUM LANDING WITH MAXIMUM 2.0 % SLOPE IN ALL DIRECTIONS.

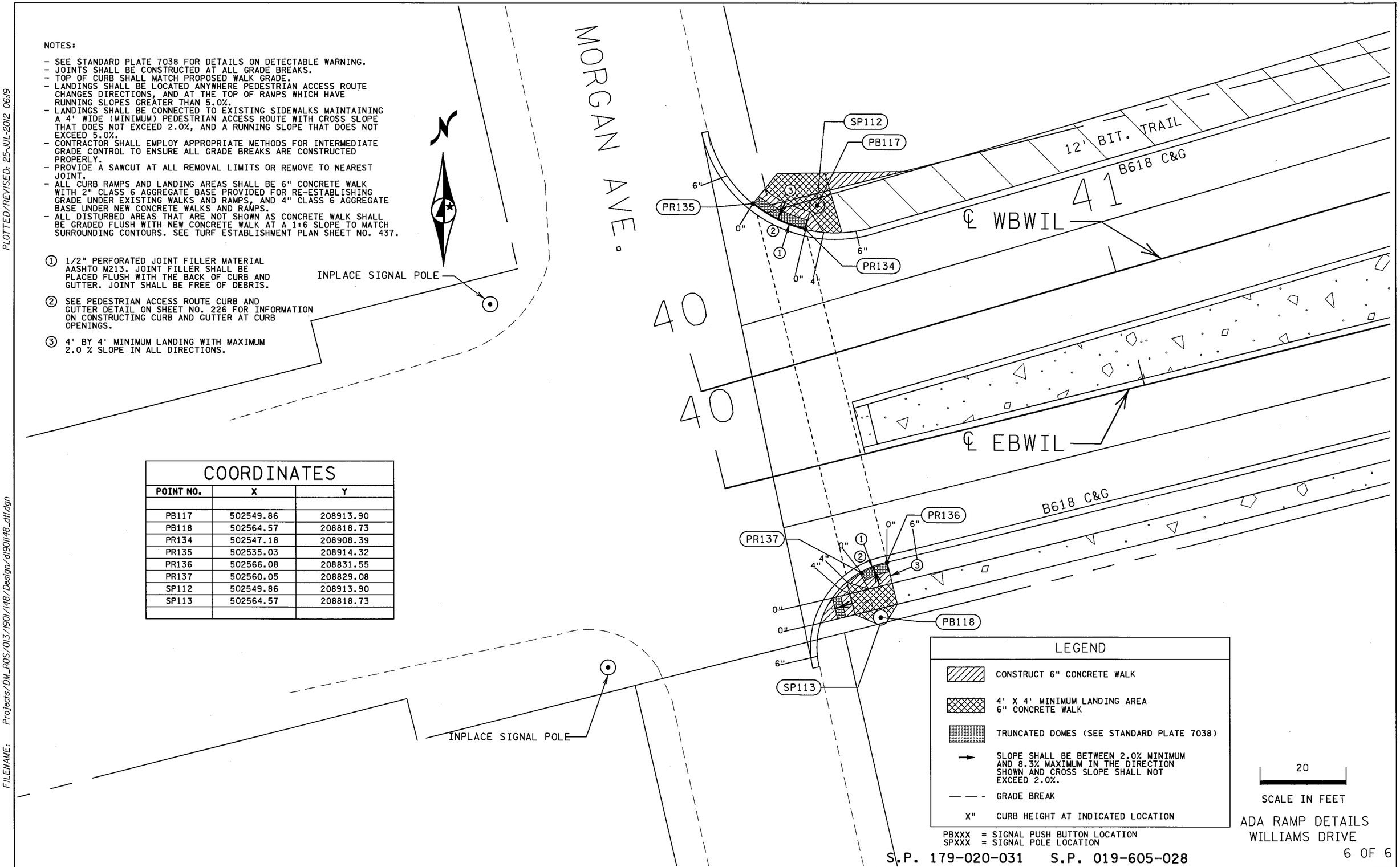

COORDINATES

POINT NO.	X	Y
PB117	502549.86	208913.90
PB118	502564.57	208818.73
PR134	502547.18	208908.39
PR135	502535.03	208914.32
PR136	502566.08	208831.55
PR137	502560.05	208829.08
SP112	502549.86	208913.90
SP113	502564.57	208818.73

LEGEND

- CONSTRUCT 6" CONCRETE WALK
- 4' X 4' MINIMUM LANDING AREA 6" CONCRETE WALK
- TRUNCATED DOMES (SEE STANDARD PLATE 7038)
- SLOPE SHALL BE BETWEEN 2.0% MINIMUM AND 8.3% MAXIMUM IN THE DIRECTION SHOWN AND CROSS SLOPE SHALL NOT EXCEED 2.0%.
- GRADE BREAK
- X" CURB HEIGHT AT INDICATED LOCATION

PBXXX = SIGNAL PUSH BUTTON LOCATION
SPXXX = SIGNAL POLE LOCATION

20
SCALE IN FEET

ADA RAMP DETAILS
WILLIAMS DRIVE

S.P. 179-020-031 S.P. 019-605-028

6 OF 6

CONSTRUCTION DETAILS

DRAWN BY: MS	CHECKED BY: HS	CERTIFIED BY _____ LICENSED PROFESSIONAL ENGINEER	LIC. NO. 18520 DATE 6/18/12	STATE PROJ. NO. 1901-148 (T.H. 13) SHEET NO. 223 OF 442 SHEETS

PLOTTED/REVISED: 25-JUL-2012 06:19
DISTRICT #: METRO
IPLOT NAME: d1901148_dt15
FILENAME: Projects/DM_ROS/013/1901/148/Design/d1901148_dt1.dgn

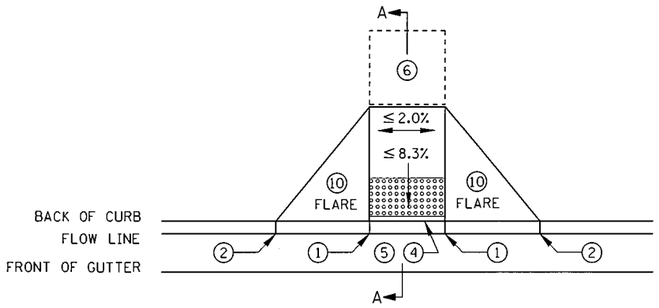

PERPENDICULAR

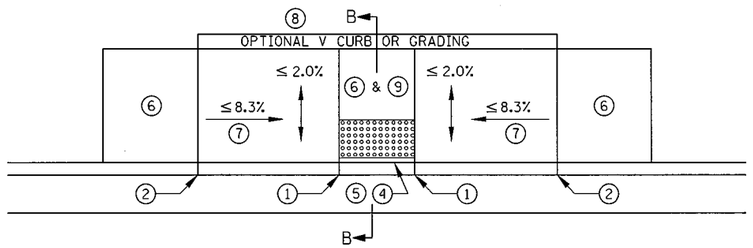

PARALLEL

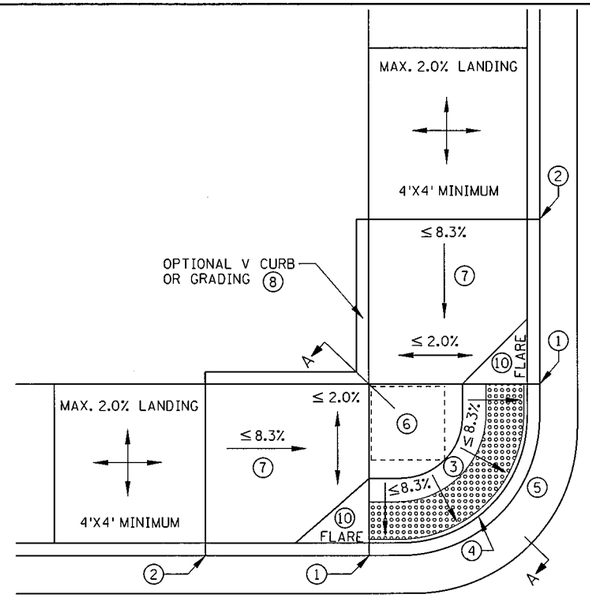

FAN

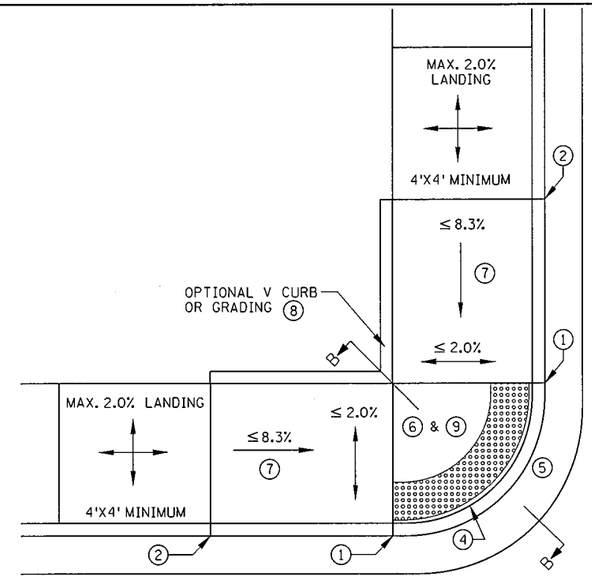

DEPRESSED CORNER

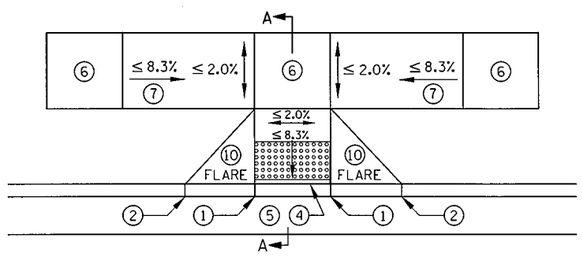

TIERED PERPENDICULAR

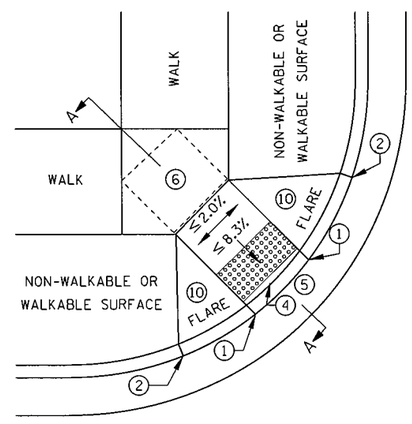

DIAGONAL 12

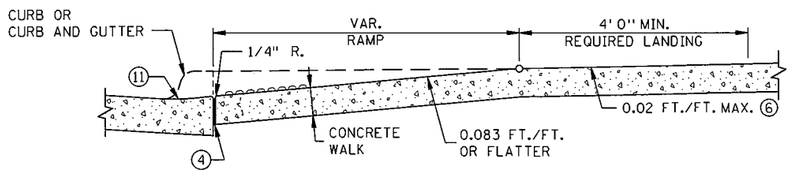

SECTION A-A

PERPENDICULAR/TIERED/DIAGONAL/FAN

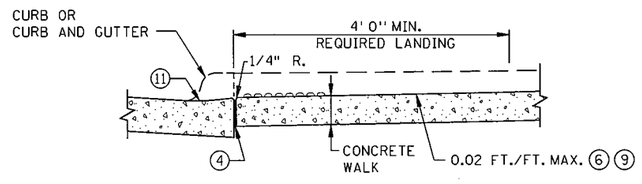

SECTION B-B

PARALLEL/DEPRESSED CORNER

NOTES:

SEE STANDARD PLATE 7038 AND SHEET 4 OF 5 FOR DETAILS ON DETECTABLE WARNING.

SLOPES ARE DEFINED AS ABSOLUTE ELEVATION DIFFERENCE PER LENGTH OF RUN. (AS OPPOSED TO A RELATIVE SLOPE WITH RESPECT TO A CURB LINE OR CURB HEIGHT.)

LANDINGS SHALL BE LOCATED ANYWHERE THE PEDESTRIAN ACCESS ROUTE CHANGES DIRECTION, AND AT THE TOP OF RAMPS THAT HAVE RUNNING SLOPES GREATER THAN 5%.

INITIAL CURB RAMP LANDINGS SHALL BE CONSTRUCTED WITHIN 15' FROM THE BACK OF CURB, WITH 6' FROM THE BACK OF CURB BEING THE PREFERRED DISTANCE.

SECONDARY CURB RAMP LANDINGS ARE REQUIRED FOR EVERY 30" OF VERTICAL RISE WHEN THE LONGITUDINAL SLOPE IS 5% OR GREATER.

CONTRACTION JOINTS SHALL BE CONSTRUCTED AT ALL GRADE BREAKS.

TOP OF CURB SHALL MATCH PROPOSED ADJACENT WALK GRADE.

USE 6" CONCRETE FOR ALL INITIAL RAMP AND LANDING AREAS.

CONTRACTOR SHALL EMPLOY APPROPRIATE METHODS FOR INTERMEDIATE GRADE CONTROL TO ENSURE ALL GRADE BREAKS ARE CONSTRUCTED PROPERLY.

ALL GRADE BREAKS SHALL BE PERPENDICULAR TO THE DIRECTION OF TRAVEL/PEDESTRIAN ACCESS ROUTE.

4' MINIMUM WIDTH OF DETECTABLE WARNING IS REQUIRED FOR ALL RAMPS. SHARED USE PATHS SHALL HAVE DETECTABLE WARNING ACROSS THE ENTIRE WIDTH OF PATH WHEN THE PATH CROSSES A ROAD.

1. 0" CURB HEIGHT.
2. FULL CURB HEIGHT.
3. LESS THAN 5% PREFERRED. 5-8.3% SHOULD ONLY BE USED AFTER ALL OTHER SLOPES HAVE BEEN CONSIDERED AND DEEMED IMPRACTICAL.
4. 1/2" PREFORMED JOINT FILLER MATERIAL AASHTO M 213. JOINT FILLER SHALL BE PLACED FLUSH WITH THE BACK OF CURB AND ADJACENT SIDEWALK. JOINT SHALL BE FREE OF DEBRIS. RECTANGULAR DETECTABLE WARNINGS SHALL BE SET BACK 3" FROM THE BACK OF CURB. RADIAL DETECTABLE WARNINGS SHALL BE SET BACK 3"-6" FROM THE BACK OF CURB.
5. SEE PEDESTRIAN ACCESS ROUTE CURB AND GUTTER DETAIL FOR INFORMATION ON CONSTRUCTING CURB AND GUTTER AT CURB OPENINGS. SEE SHEET NO. 3 OF 5.
6. 4' BY 4' MIN. LANDING WITH MAX. 2% SLOPE IN ALL DIRECTIONS.
7. IF RUNNING SLOPE IS LESS THAN 5.0% NO SECONDARY LANDING IS REQUIRED.
8. V CURB, IF USED, SHALL BE PLACED OUTSIDE THE SIDEWALK LIMITS WHEN RIGHT OF WAY ALLOWS. SEE SHEET 5 OF 5.
9. DETECTABLE WARNINGS MAY BE PART OF 4' X 4' LANDING AREA IF IT IS NOT FEASIBLE TO CONSTRUCT THE LANDING OUTSIDE OF THE DETECTABLE WARNING AREA.
10. SEE SHEET 4 OF 5, TYPICAL SIDE TREATMENT OPTIONS, FOR DETAILS ON FLARES AND RETURNED CURBS.
11. SEE SHEET 3 OF 5 FOR FURTHER DETAIL.
12. DIAGONAL RAMPS SHOULD ONLY BE USED AFTER ALL OTHER CURB RAMP TYPES HAVE BEEN CONSIDERED AND DEEMED IMPRACTICAL.

S.P. 179-020-031 S.P. 019-605-028

STANDARD PLAN SHEET NO. 5-297.250 (1 OF 5)	PEDESTRIAN CURB RAMP DETAILS
STANDARD APPROVED: MAY 10, 2012	

STATE PROJ. NO. 1901-148 (TH 13) SHEET NO. 224 OF 442 SHEETS

PLOTTED/REVISED: 11-JUN-2012 09:26
DISTRICT *: METRO
USER NAME: s250_l_spn
PATH & FILENAME: Projects/DM_ROS/013/1901/148/Design/PlanSheets/Standard Plans/s250_l_spn.dgn
FILE NAME: s250_l_spn

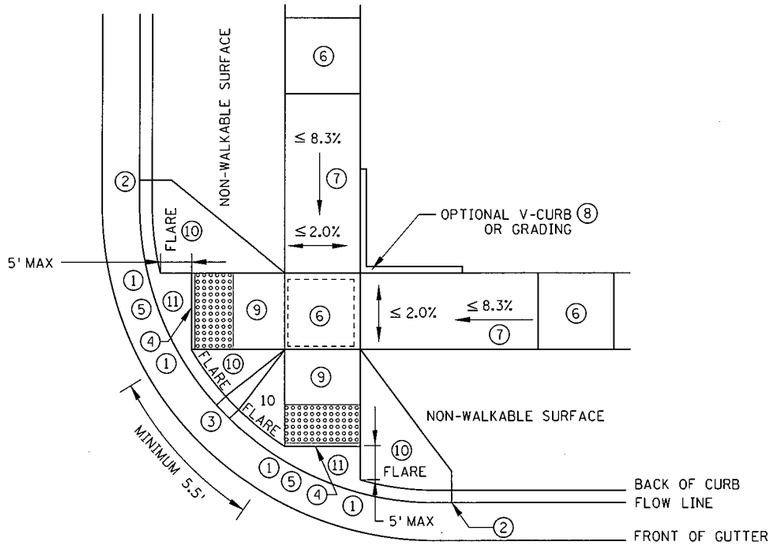

ADJACENT TO NON-WALKABLE SURFACE

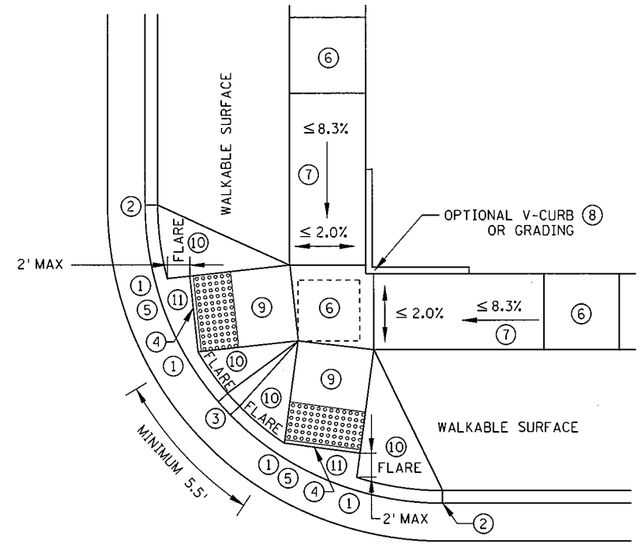

ADJACENT TO WALKABLE SURFACE

COMBINED DIRECTIONAL

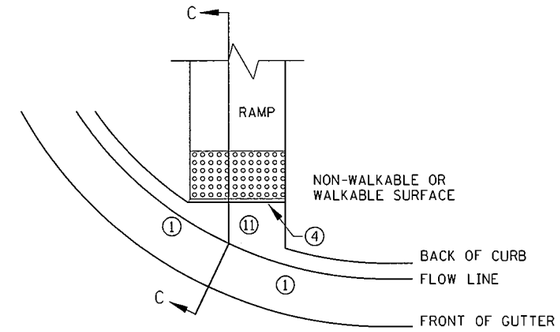

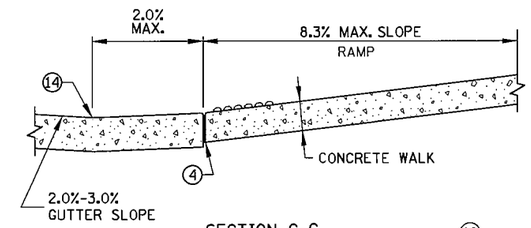

SECTION C-C 12

CURB FOR DIRECTIONAL RAMPS

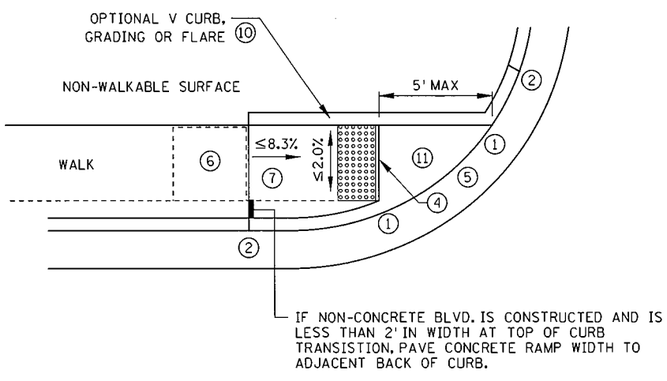

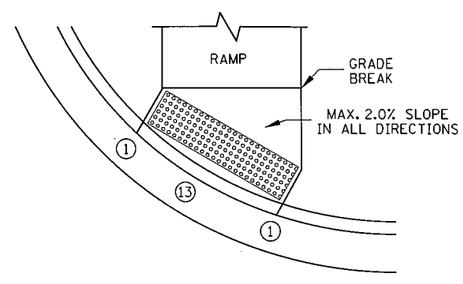

ONE-WAY DIRECTIONAL

NOTES:

SEE STANDARD PLATE 7038 AND SHEET 4 OF 5 FOR DETAILS ON DETECTABLE WARNING.

SLOPES ARE DEFINED AS ABSOLUTE ELEVATION DIFFERENCE PER LENGTH OF RUN. (AS OPPOSED TO A RELATIVE SLOPE WITH RESPECT TO A CURB LINE OR CURB HEIGHT.)

LANDINGS SHALL BE LOCATED ANYWHERE THE PEDESTRIAN ACCESS ROUTE CHANGES DIRECTION, AND AT THE TOP OF RAMPS THAT HAVE RUNNING SLOPES GREATER THAN 5%.

INITIAL CURB RAMP LANDINGS SHALL BE CONSTRUCTED WITHIN 15' FROM THE BACK OF CURB, WITH 6' FROM THE BACK OF CURB BEING THE PREFERRED DISTANCE.

SECONDARY CURB RAMP LANDINGS ARE REQUIRED FOR EVERY 30" OF VERTICAL RISE WHEN THE LONGITUDINAL SLOPE IS 5% OR GREATER.

CONTRACTION JOINTS SHALL BE CONSTRUCTED AT ALL GRADE BREAKS.

TOP OF CURB SHALL MATCH PROPOSED ADJACENT WALK GRADE.

USE 6" CONCRETE WALK FOR ALL INITIAL RAMP AND LANDING AREAS.

CONTRACTOR SHALL EMPLOY APPROPRIATE METHODS FOR INTERMEDIATE GRADE CONTROL TO ENSURE ALL GRADE BREAKS ARE CONSTRUCTED PROPERLY.

ALL GRADE BREAKS SHALL BE PERPENDICULAR TO THE DIRECTION OF TRAVEL/PEDESTRIAN ACCESS ROUTE.

4' MINIMUM WIDTH OF DETECTABLE WARNING IS REQUIRED FOR ALL RAMPS. SHARED USE PATHS SHALL HAVE DETECTABLE WARNING ACROSS THE ENTIRE WIDTH OF PATH WHEN THE PATH CROSSES A ROAD.

1. 0" CURB HEIGHT.
2. FULL CURB HEIGHT.
3. 3" MINIMUM CURB HEIGHT.
4. 1/2" PREFORMED JOINT FILLER MATERIAL AASHTO M 213. JOINT FILLER SHALL BE PLACED FLUSH WITH THE BACK OF CURB AND ADJACENT SIDEWALK. JOINT SHALL BE FREE OF DEBRIS. RECTANGULAR DETECTABLE WARNINGS SHALL BE SET BACK 3" FROM THE BACK OF CURB. RADIAL DETECTABLE WARNINGS SHALL BE SET BACK 3"-6" FROM THE BACK OF CURB.
5. SEE PEDESTRIAN ACCESS ROUTE CURB AND GUTTER DETAIL FOR INFORMATION ON CONSTRUCTING CURB AND GUTTER AT CURB OPENINGS. SEE SHEET NO. 3 OF 5.
6. 4' BY 4' MIN. LANDING WITH MAX. 2% SLOPE IN ALL DIRECTIONS.
7. IF RAMP SLOPE IS LESS THAN 5% NO SECONDARY LANDING IS REQUIRED.
8. V CURB, IF USED, SHALL BE PLACED OUTSIDE THE SIDEWALK LIMITS WHEN RIGHT OF WAY ALLOWS.
9. RUNNING SLOPE LESS THAN OR EQUAL TO 8.3% & CROSS SLOPE LESS THAN OR EQUAL TO 2%.
10. SEE SHEET 4 OF 5, TYPICAL SIDE TREATMENT OPTIONS, FOR DETAILS ON FLARES AND RETURNED CURBS.
11. MAX. 2% SLOPE IN ALL DIRECTIONS IN FRONT OF GRADE BREAK AND DRAIN TO FLOW LINE. SHALL BE CONSTRUCTED INTEGRAL WITH CURB AND GUTTER.
12. TO BE USED FOR ALL DIRECTIONAL RAMPS.
13. DOMES PLACED AT THE BACK OF CURB WHEN ALLOWABLE SETBACK CRITERIA IS EXCEEDED.
14. ANY VERTICAL LIP THAT OCCURS AT THE FLOW LINE MAY NOT BE GREATER THAN 1/4 INCH.

S.P. 179-020-031 S.P. 019-605-028

STANDARD PLAN SHEET NO. 5-297.250 (2 OF 5)	PEDESTRIAN CURB RAMP DETAILS
STANDARD APPROVED: MAY 10, 2012	

STATE PROJ. NO. 1901-148 (TH 13) SHEET NO. 225 OF 442 SHEETS

PLOTTED/REVISED: 11-JUN-2012 09:27
DISTRICT #: METRO
USER NAME: s250_2_spn
PATH & FILENAME: Projects/DM_ROS/013/1901/148/Design/PlanSheets/Standard Plans/s250_2_spn.dgn
FILE NAME: s250_2_spn

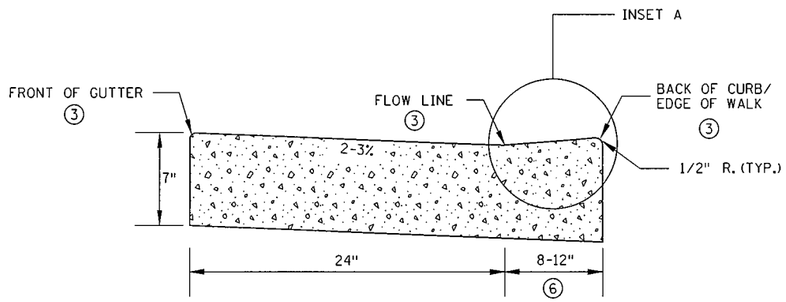

NON PERPENDICULAR ①

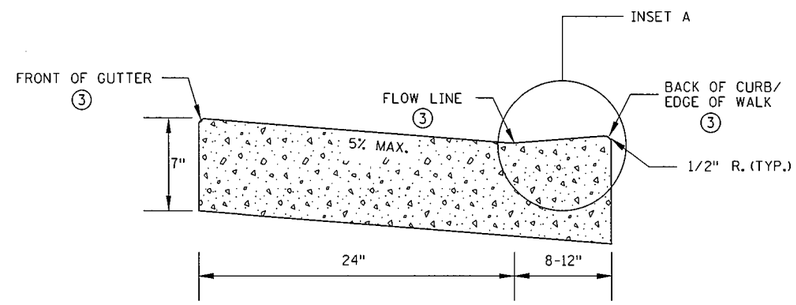

PERPENDICULAR ②

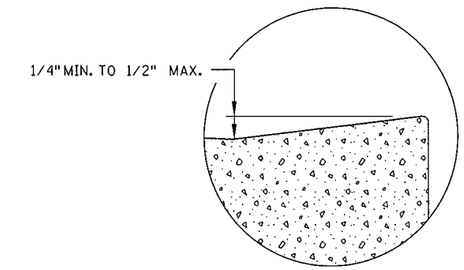

INSET A

PEDESTRIAN ACCESS ROUTE
CURB & GUTTER DETAIL

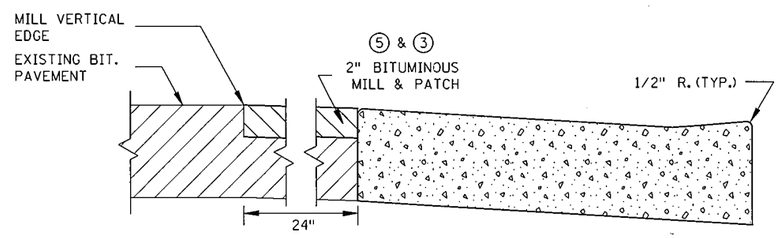

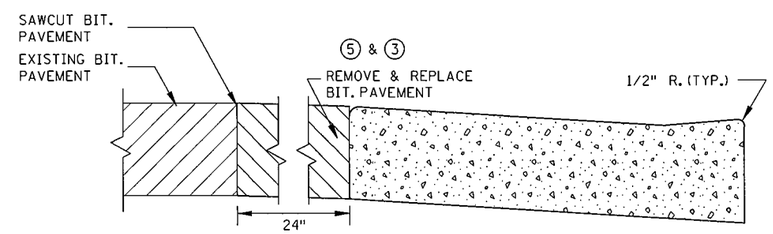

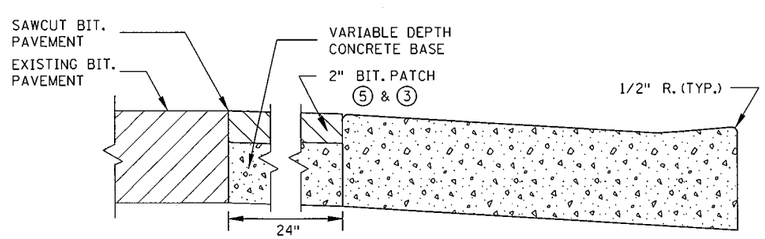

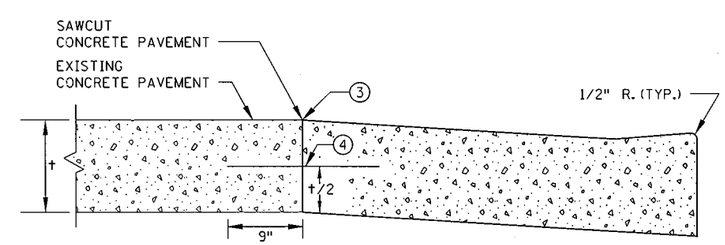

PAVEMENT TREATMENT OPTIONS
IN FRONT OF CURB & GUTTER
FOR USE ON CURB RAMP RETROFITS

NOTES:

ADEQUATE DRAINAGE SHALL BE MAINTAINED THROUGHOUT THE PEDESTRIAN ACCESS ROUTE (PAR) AT A 2% ABSOLUTE MAXIMUM.

NO PONDING SHALL BE PRESENT IN THE PAR.

ANY VERTICAL LIP THAT OCCURS AT THE FLOW LINE MAY NOT BE GREATER THAN 1/4 INCH.

① FOR USE AT CURB CUTS WHERE THE PEDESTRIAN'S PATH OF TRAVEL IS ASSUMED NON PERPENDICULAR TO THE GUTTER FLOW LINE. RAMP TYPES INCLUDE: FANS, DEPRESSED CORNERS, & ONE WAY AND COMBINED DIRECTIONALS.

② FOR USE AT CURB CUTS WHERE THE PEDESTRIAN'S PATH OF TRAVEL IS ASSUMED PERPENDICULAR TO THE GUTTER FLOW LINE. RAMP TYPES INCLUDE: PERPENDICULAR, TIERED PERPENDICULAR, PARALLEL, AND DIAGONAL RAMPS.

③ THERE SHALL BE NO VERTICAL DISCONTINUITIES GREATER THAN 1/4".

④ DRILL AND GROUT NO. 13 EPOXY-COATED 18" LONG BARS AT 2' CENTER TO CENTER INTO EXISTING CONCRETE PAVEMENT.

⑤ ELEVATION CHANGE TAKES PLACE FROM THE EXISTING TO NEW FRONT OF GUTTER. PATCH IS USED TO MATCH THE NEW GUTTER FACE INTO THE EXISTING ROADWAY.

⑥ VARIABLE WIDTH FOR DIRECTIONAL CURB APPLICATIONS.

S.P. 179-020-031 S.P. 019-605-028

STANDARD PLAN SHEET NO. 5-297.250 (3 OF 5)	PEDESTRIAN CURB RAMP DETAILS
STANDARD APPROVED: MAY 10, 2012	

STATE PROJ. NO. 1901-148 (TH 13) SHEET NO. 226 OF 442 SHEETS

PLOTTED/REVISED: 11-JUN-2012 09:28
DISTRICT #: METRO
USER NAME: s250_3_spn
PATH & FILENAME: Projects/DM_ROS/013/1901/148/Design/PlanSheets/Standard Plans/s250_3_spn.dgn
FILE NAME: s250_3_spn

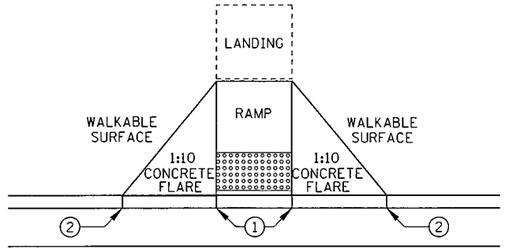

PAVED FLARES
ADJACENT TO WALKABLE SURFACE

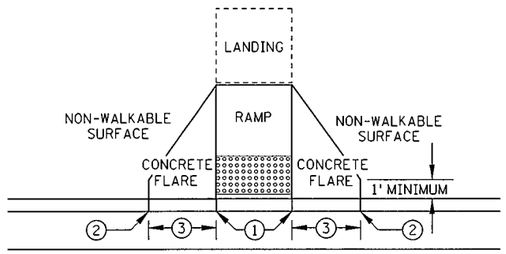

PAVED FLARES
ADJACENT TO NON-WALKABLE SURFACE

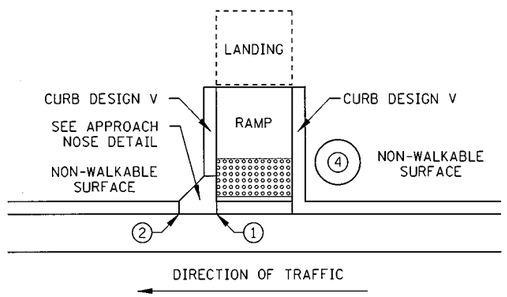

RETURNED CURB

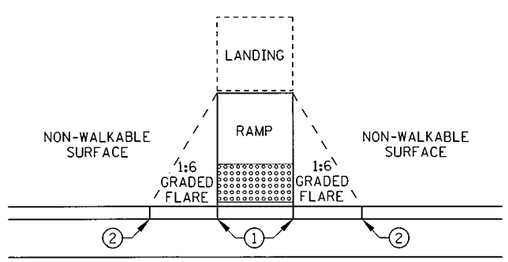

GRADED FLARES

TYPICAL SIDE TREATMENT OPTIONS ⑤

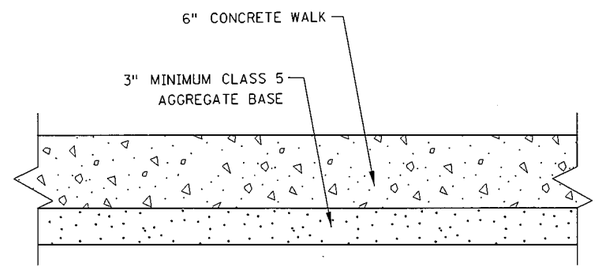

TYPICAL SIDEWALK SECTION
WITHIN INTERSECTION CORNER

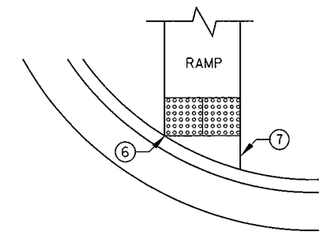

DETECTABLE WARNING
SETBACK CRITERIA

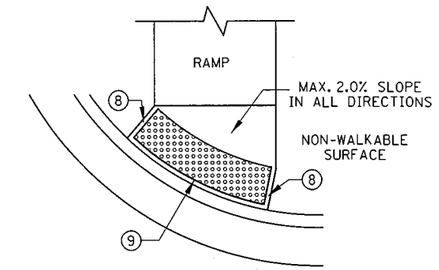

RADIAL DETECTABLE
WARNING AT RADIUS

DETECTABLE WARNING PLACEMENT

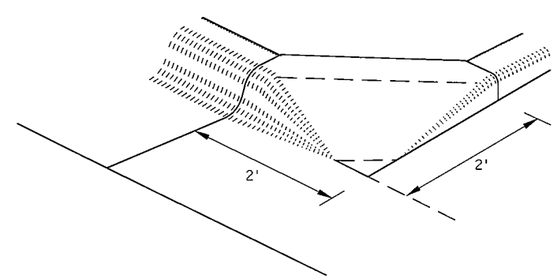

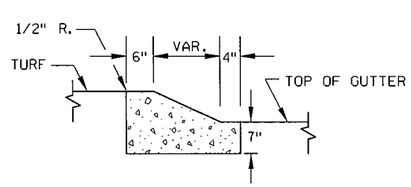

SECTION A-A

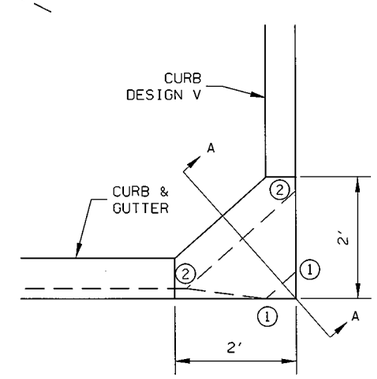

APPROACH NOSE DETAIL
FOR DOWNSTREAM SIDE OF TRAFFIC

NOTES:

SEE STANDARD PLATE 7038 AND THIS SHEET FOR DETAILS ON DETECTABLE WARNING.

USE 6" CONCRETE WALK UP TO EXISTING SIDEWALK GRADES FOR ALL RAMP AND LANDING AREAS.

WHETHER A SURFACE IS WALKABLE OR NOT SHALL BE DETERMINED BY THE ENGINEER.

FLARE LENGTHS SHOULD BE LESS THAN 8' LONG MEASURED ALONG THE RAMPS FROM THE BACK OF CURB.

4' MINIMUM WIDTH OF DETECTABLE WARNING IS REQUIRED FOR ALL RAMPS. SHARED USE PATHS SHALL HAVE DETECTABLE WARNING ACROSS THE ENTIRE WIDTH OF PATH WHEN THE PATH CROSSES A ROAD.

1. 0" CURB HEIGHT.
2. FULL CURB HEIGHT.
3. 2' - 3' CONCRETE FLARE.
4. IMMOVABLE OBJECT OR OBSTRUCTION.
5. SIDE TREATMENTS ARE APPLICABLE TO ALL RAMP TYPES AND SHOULD BE IMPLEMENTED AS NEEDED ON ALL RAMPS AS FIELD CONDITIONS DICTATE. THE ENGINEER SHALL DETERMINE THE RAMP SIDE TREATMENTS BASED ON MAINTENANCE OF BOTH ROADWAY AND SIDEWALK, ADJACENT PROPERTY CONSIDERATIONS, AND MITIGATING CONSTRUCTION IMPACTS.
6. DETECTABLE WARNING SHALL HAVE ONE CORNER 3" FROM THE BACK OF CURB.
7. SHALL BE 2' MAXIMUM OFFSET WHEN ADJACENT TO WALKABLE SURFACE AND 5' MAXIMUM OFFSET WHEN ADJACENT TO NON-WALKABLE SURFACE.
8. WHEN NO FLARES ARE PROPOSED, THE CONCRETE WALK SHALL BE FORMED AND CONSTRUCTED PERPENDICULAR TO THE BACK OF CURB. MAINTAIN 3" BETWEEN EDGE OF DOMES AND EDGE OF CONCRETE.
9. DETECTABLE WARNING TO BE PLACED AT A UNIFORM OFFSET DISTANCE FROM 3" TO 6" FROM THE BACK OF CURB. IF NO CURB AND GUTTER IS PLACED IN RURAL SECTIONS, DETECTABLE WARNING SHALL BE PLACED 1' FROM THE EDGE OF ROADWAY TO PROVIDE CONCRETE BORDER.

S.P. 179-020-031 S.P. 019-605-028

STANDARD PLAN SHEET NO. 5-297.250 (4 OF 5)	PEDESTRIAN CURB RAMP DETAILS
STANDARD APPROVED: MAY 10, 2012	

STATE PROJ. NO. 1901-148 (TH 13) SHEET NO. 227 OF 442 SHEETS

PLOTTED/REVISED: 11-JUN-2012 09:29
DISTRICT #: METRO
USER NAME: s250_4_spn
PATH & FILENAME: Projects/DM_ROS/013/1901/148/Design/PlanSheets/Standard Plans/s250_4_spn.dgn
FILE NAME: s250_4_spn

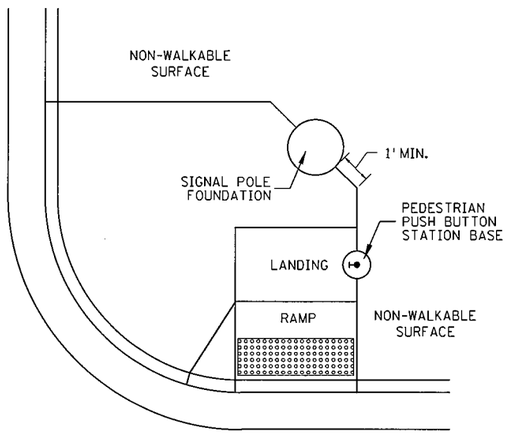

CONCRETE WALK EDGES ADJACENT TO CONCRETE STRUCTURES

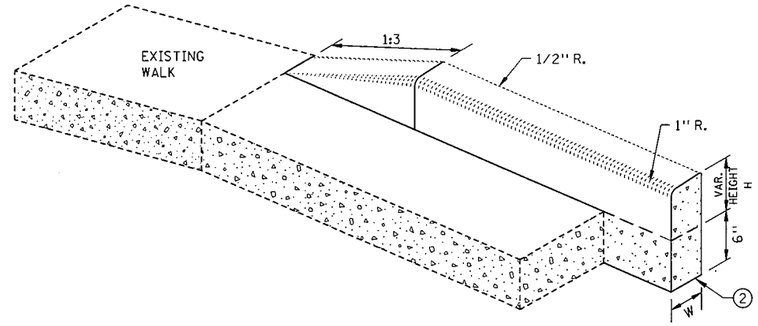

V CURB ADJACENT TO LANDSCAPE
CURB WITHIN SIDEWALK LIMITS

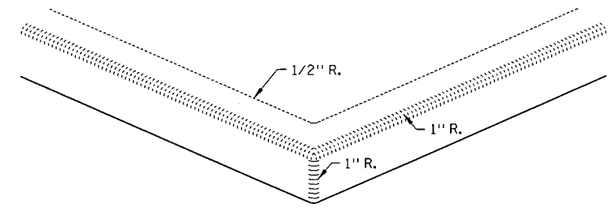

V CURB INTERSECTION

CONCRETE CURB DESIGN V	
CURB HEIGHT H	CURB WIDTH W
< 6"	4"
≥ 6"	6"

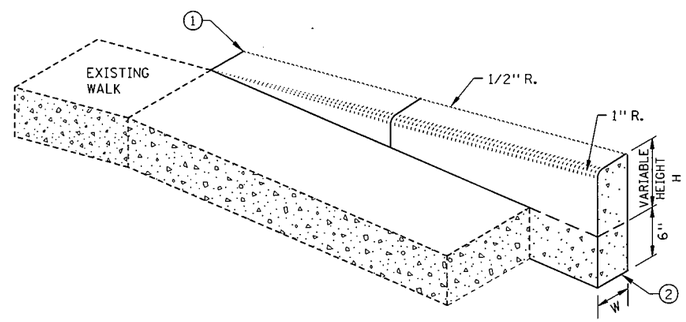

V CURB ADJACENT TO LANDSCAPE
CURB OUTSIDE SIDEWALK LIMITS

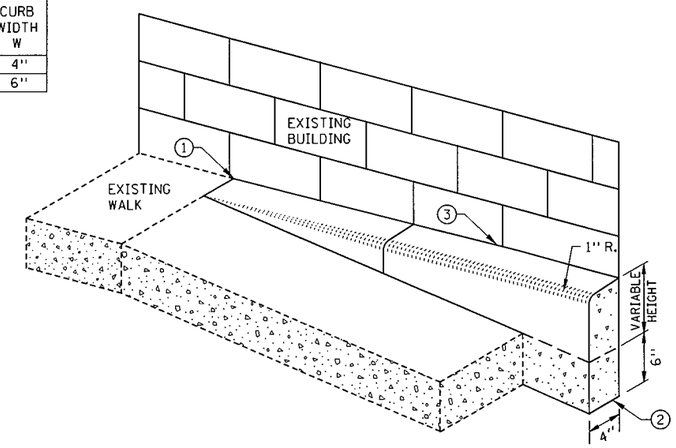

V CURB ADJACENT TO BUILDING

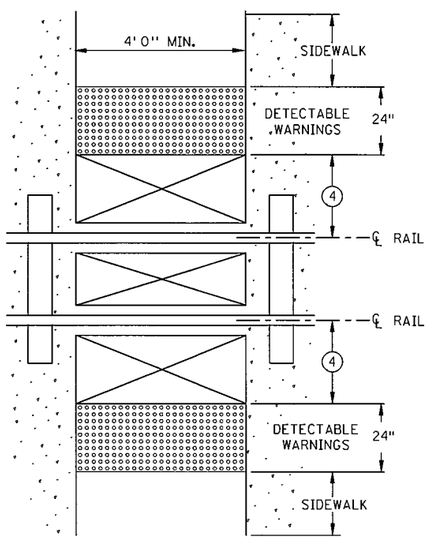

RAILROAD CROSSING
PLAN VIEW

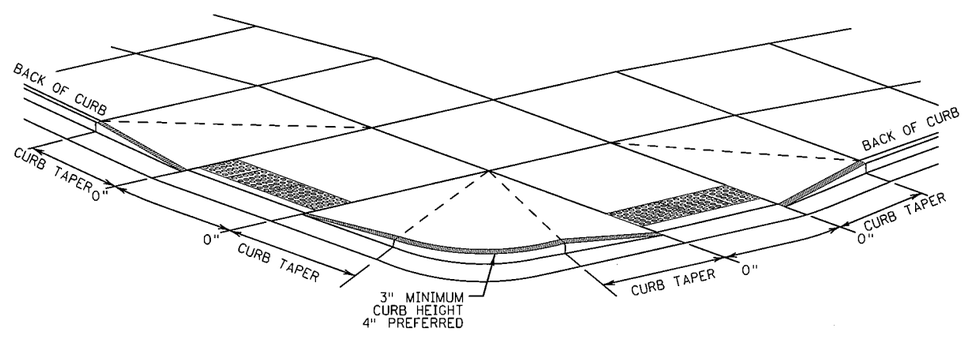

DETECTABLE EDGE AT QUADRANT ⑤

NOTES:

ALL V-CURB CONTRACTION JOINTS SHALL MATCH CONCRETE WALK JOINTS.

V CURB SHALL BE PLACED OUTSIDE THE SIDEWALK LIMITS WHEN RIGHT OF WAY ALLOWS.

V CURB NEXT TO BUILDING SHALL BE A 4" WIDTH AND SHALL MATCH PREVIOUS TOP OF SIDEWALK ELEVATIONS.

① END TAPERS AT TRANSITION SECTION SHALL MATCH INPLACE SIDEWALK GRADES.

② ALL V CURB SHALL MATCH BOTTOM OF ADJACENT WALK.

③ EDGE BETWEEN NEW V CURB AND INPLACE STRUCTURE SHALL BE SEALED AND BOND BREAKER SHALL BE USED BETWEEN EXISTING STRUCTURE AND PLACED V-CURB.

④ EDGE OF DETECTABLE WARNING SURFACES SHALL BE PLACED 6' MINIMUM TO 15' MAXIMUM FROM THE CENTERLINE OF THE NEAREST RAIL. WHEN PEDESTRIAN GATES ARE PROVIDED, DETECTABLE WARNING SURFACES SHALL BE PLACED ON THE SIDE OF THE GATES OPPOSITE THE RAIL.

⑤ ALL CONSTRUCTED CURBS MUST HAVE A CONTINUOUS DETECTABLE EDGE FOR THE VISUALLY IMPAIRED. THIS DETECTABLE EDGE REQUIRES TRUNCATED DOMES WHEREVER THERE IS ZERO-INCH HIGH CURB. CURB TRANSITIONS ARE CONSIDERED A DETECTABLE EDGE WHEN THE TAPER STARTS IMMEDIATELY AT THE EDGE OF THE TRUNCATED DOMES AND UNIFORMLY RISES TO A 3-INCH MINIMUM CURB HEIGHT. ANY CURB NOT PART OF A CURB TRANSITION AND LESS THAN 3 INCHES IN HEIGHT IS NOT CONSIDERED A DETECTABLE EDGE AND THEREFORE IS NOT COMPLIANT WITH ACCESSIBILTY GUIDELINES.

S.P. 179-020-031 S.P. 019-605-028

STANDARD PLAN SHEET NO. 5-297.250 (5 OF 5)	PEDESTRIAN CURB RAMP DETAILS
STANDARD APPROVED: MAY 10, 2012	

STATE PROJ. NO. 1901-148 (TH 13) SHEET NO. 228 OF 442 SHEETS

PLOTTED/REVISED: 11-JUN-2012 09:30
DISTRICT #: METRO
USER NAME: s250_5_spn
PATH & FILENAME: Projects/DM_ROS/013/1901/148/Design/PlanSheets/Standard Plans/s250_5_spn.dgn
FILE NAME: s250_5_spn

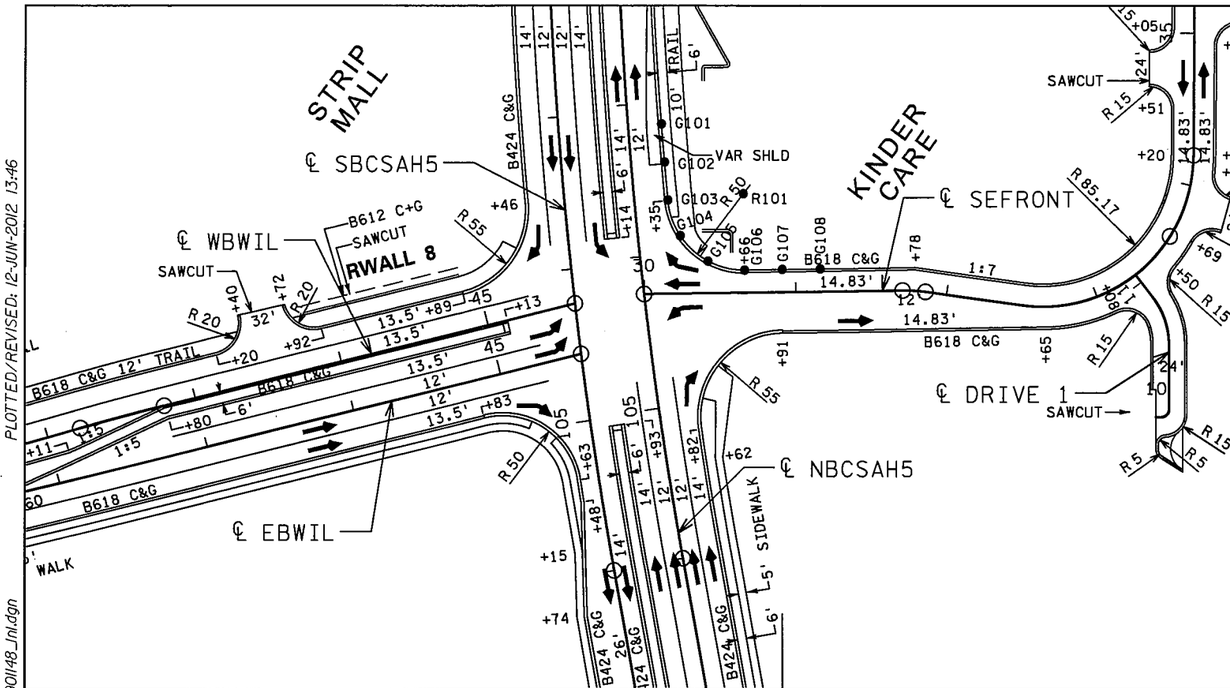

GUTTER PROFILE POINTS

POINT NO.	X	Y	ELEVATION
G101	503120.5116	209131.8868	789.39
G102	503122.5150	209106.9670	789.52
G103	503124.7399	209082.0659	789.64
G104	503132.8717	209058.6527	789.62
G105	503151.2057	209042.0410	789.74
G106	503175.2822	209036.2529	789.75
G107	503200.2822	209036.6105	789.59
G108	503225.2797	209036.9680	789.47

RADIUS POINTS

POINT NO.	X	Y	RADIUS
R101	503174.5672	209086.2478	50'

NOTE: FOR PEDESTRIAN RAMP DETAILS, SEE SHEET NO. 218.

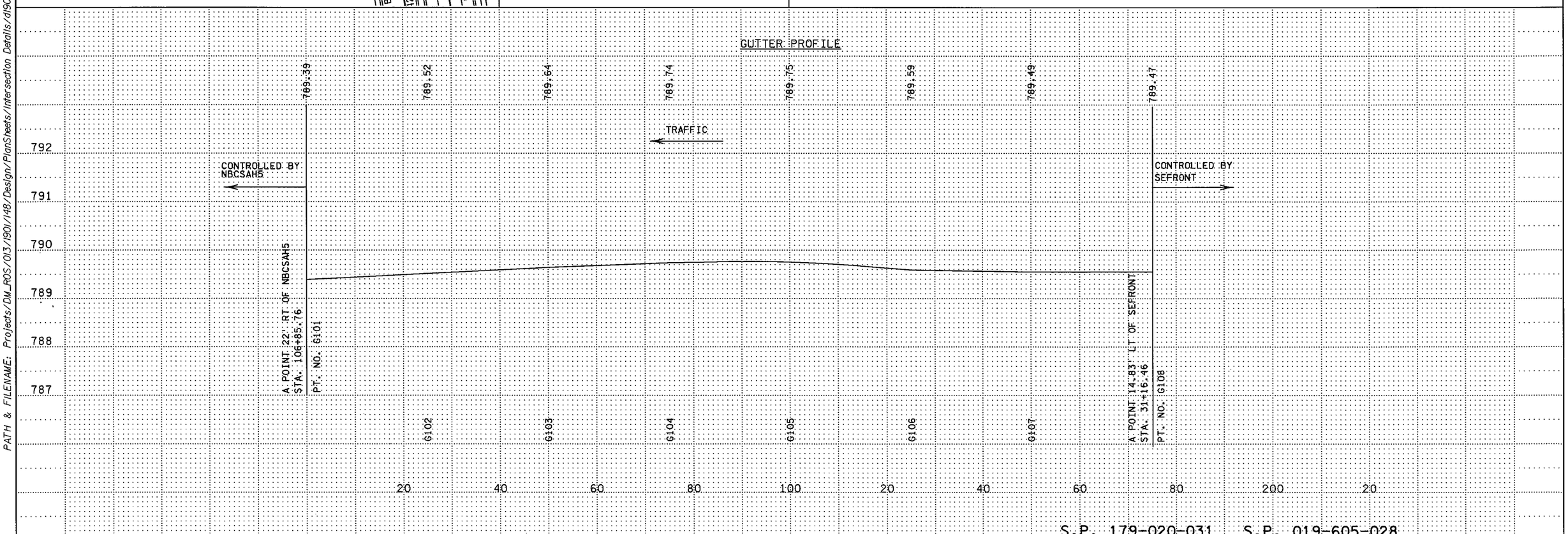

S.P. 179-020-031 S.P. 019-605-028

INTERSECTION DETAILS 1 OF 13

DRAWN BY: MS | CHECKED BY: HS | CERTIFIED BY _____ LICENSED PROFESSIONAL ENGINEER LIC. NO. 18520 DATE 6/18/12

STATE PROJ. NO. 1901-148 (T.H. 13) SHEET NO. 229 OF 442 SHEETS

DISTRICT #: METRO
IPLOT NAME: d190l148_Inl
PATH & FILENAME: Projects/DM_ROS/013/1901/148/Design/PlanSheets/Intersection Details/d190l148_Inl.dgn
PLOTTED/REVISED: 12-JUN-2012 13:46

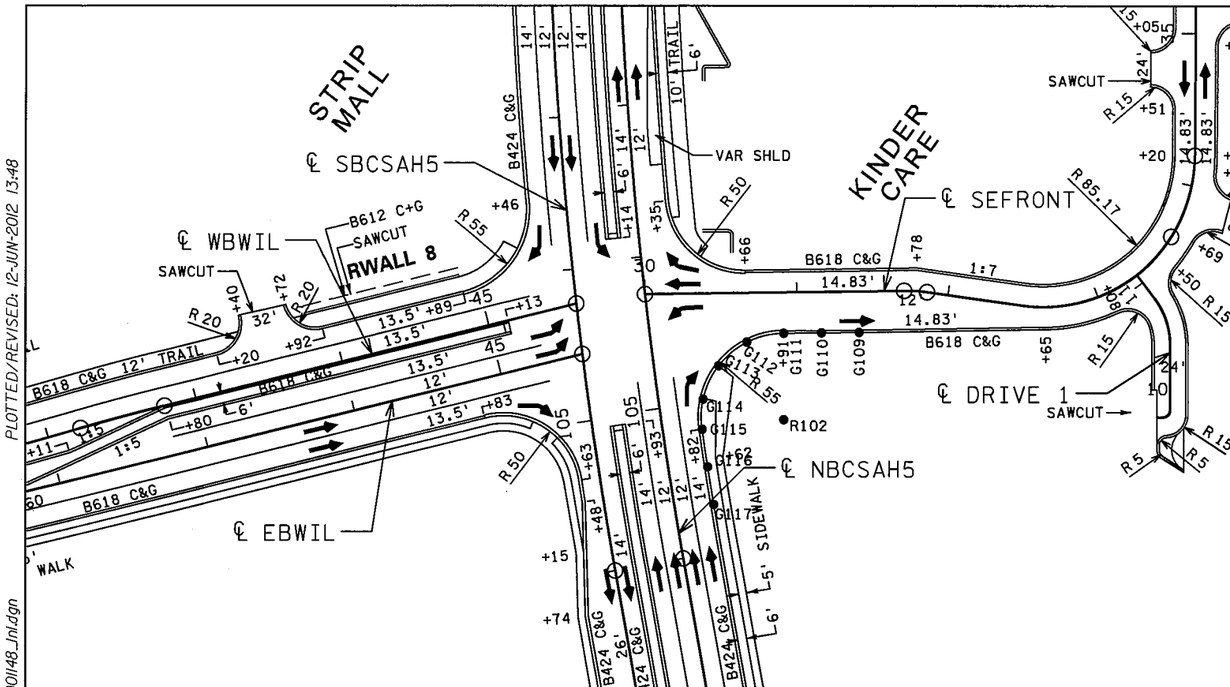

GUTTER PROFILE POINTS

POINT NO.	X	Y	ELEVATION
G109	503250.2376	208995.6607	789.30
G110	503225.2448	208995.3032	789.35
G111	503200.5140	208994.9495	789.40
G112	503176.5822	208989.0876	789.62
G113	503157.7765	208973.5804	789.84
G114	503147.5917	208951.8024	790.19
G115	503146.8924	208931.9083	790.37
G116	503150.6589	208907.1934	790.53
G117	503154.6513	208882.4624	790.72

RADIUS POINTS

POINT NO.	X	Y	RADIUS
R102	503201.3006	208939.9551	55'

NOTE: FOR PEDESTRIAN RAMP DETAILS, SEE SHEET NO. 218.

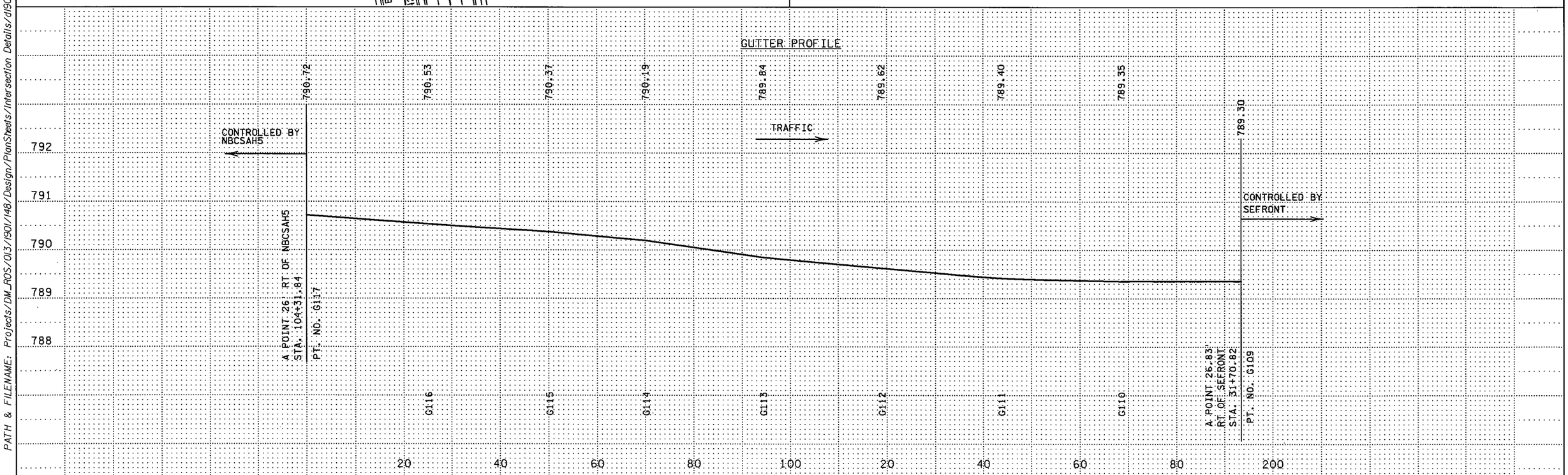

S.P. 179-020-031 S.P. 019-605-028

INTERSECTION DETAILS 2 OF 13

DRAWN BY: MS | CHECKED BY: HS | CERTIFIED BY _____ LICENSED PROFESSIONAL ENGINEER | LIC. NO. 18520 DATE 6/18/12 | STATE PROJ. NO. 1901-148 (T.H. 13) SHEET NO. 230 OF 442 SHEETS

DISTRICT #: METRO
IPLOT NAME: d190148_Inl
PATH & FILENAME: Projects/DM_ROS/013/1901/148/Design/PlanSheets/Intersection Details/d190148_Inl.dgn
PLOTTED/REVISED: 12-JUN-2012 13:48

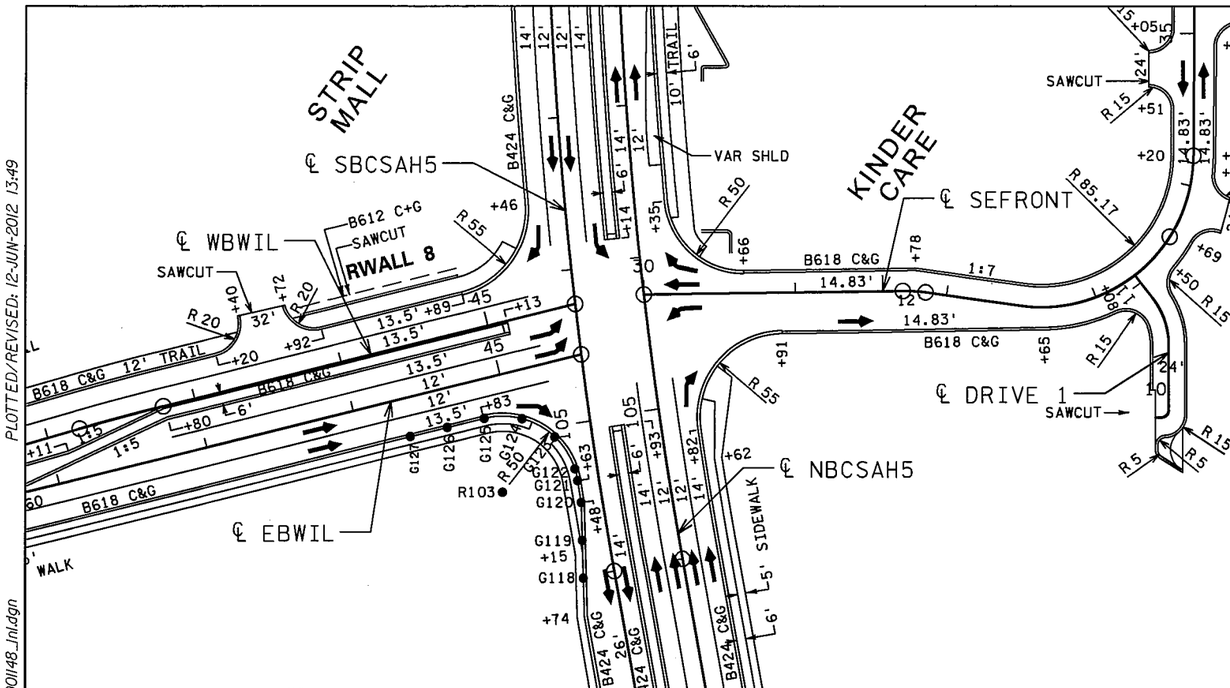

GUTTER PROFILE POINTS

POINT NO.	X	Y	ELEVATION
G118	503068.6314	208834.1184	791.12
G119	503067.9393	208859.1088	790.96
G120	503067.2471	208884.1004	790.83
G121	503064.9798	208898.4663	790.72
G122	503063.1526	208906.1593	790.65
G123	503049.9615	208927.0898	790.25
G124	503028.3507	208939.1338	789.38
G125	503003.6111	208939.3427	789.25
G126	502979.3370	208933.3623	789.22
G127	502955.0628	208927.3819	789.20

RADIUS POINTS

POINT NO.	X	Y	RADIUS
R103	503015.5719	208890.7944	50'

NOTE: FOR PEDESTRIAN RAMP DETAILS, SEE SHEET NO. 218.

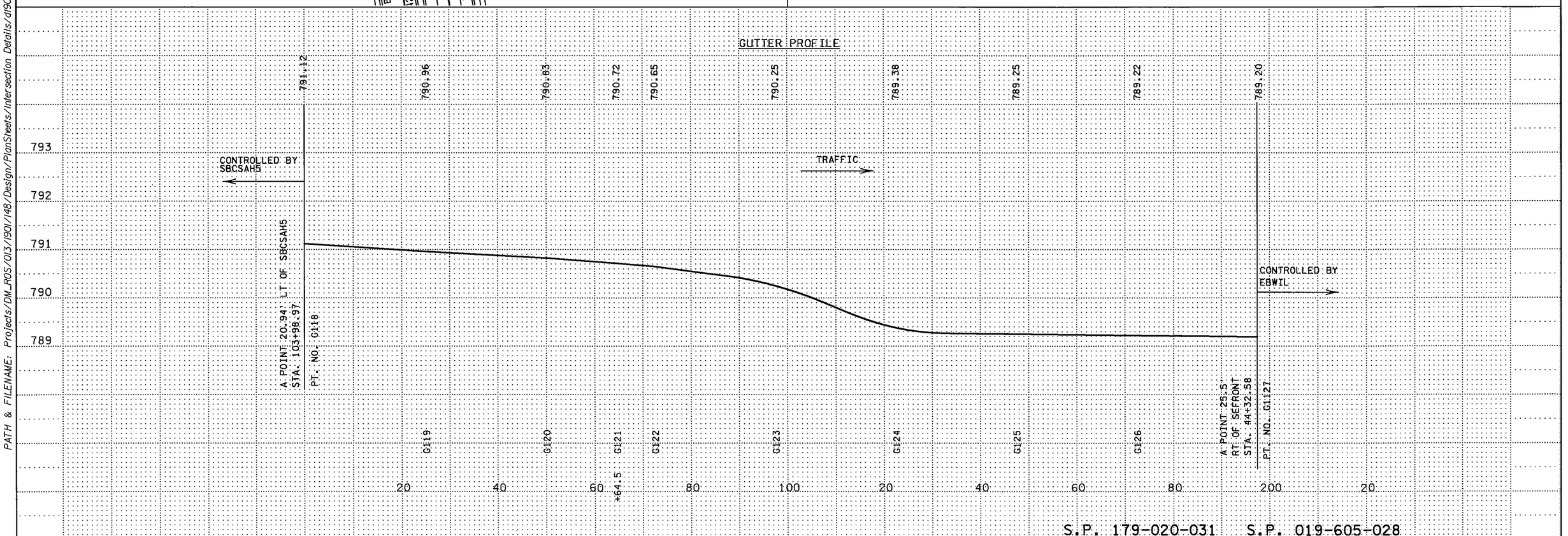

S.P. 179-020-031 S.P. 019-605-028

INTERSECTION DETAILS 3 OF 13

DRAWN BY: MS | CHECKED BY: HS | CERTIFIED BY _____ LICENSED PROFESSIONAL ENGINEER LIC. NO. 18520 DATE 6/18/12

STATE PROJ. NO. 1901-148 (T.H. 13) SHEET NO. 231 OF 442 SHEETS

DISTRICT #: METRO
IPLOT NAME: d190148_Inl
PATH & FILENAME: Projects/DM_ROS/013/1901/148/Design/PlanSheets/Intersection Details/d190148_Inl.dgn
PLOTTED/REVISED: 12-JUN-2012 13:49

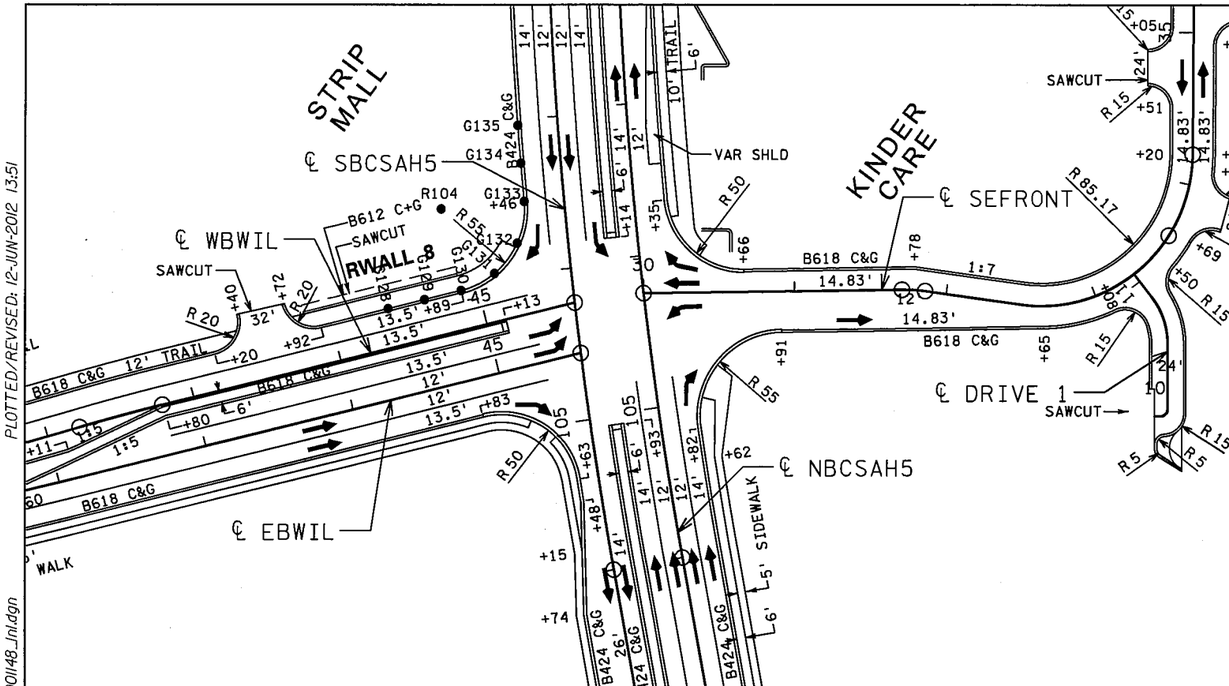

GUTTER PROFILE POINTS

POINT NO.	X	Y	ELEVATION
G128	502940.3091	209010.2588	788.80
G129	502964.5832	209016.2392	788.96
G130	502988.8574	209022.2196	789.12
G131	503010.9683	209033.4186	789.31
G132	503025.9171	209053.1884	789.47
G133	503030.4734	209080.6160	789.51
G134	503028.3097	209105.5225	789.39
G135	503026.3580	209130.4464	789.27

RADIUS POINTS

POINT NO.	X	Y	RADIUS
R104	502975.7005	209075.6227	55'

NOTE: FOR PEDESTRIAN RAMP DETAILS, SEE SHEET NO. 218.

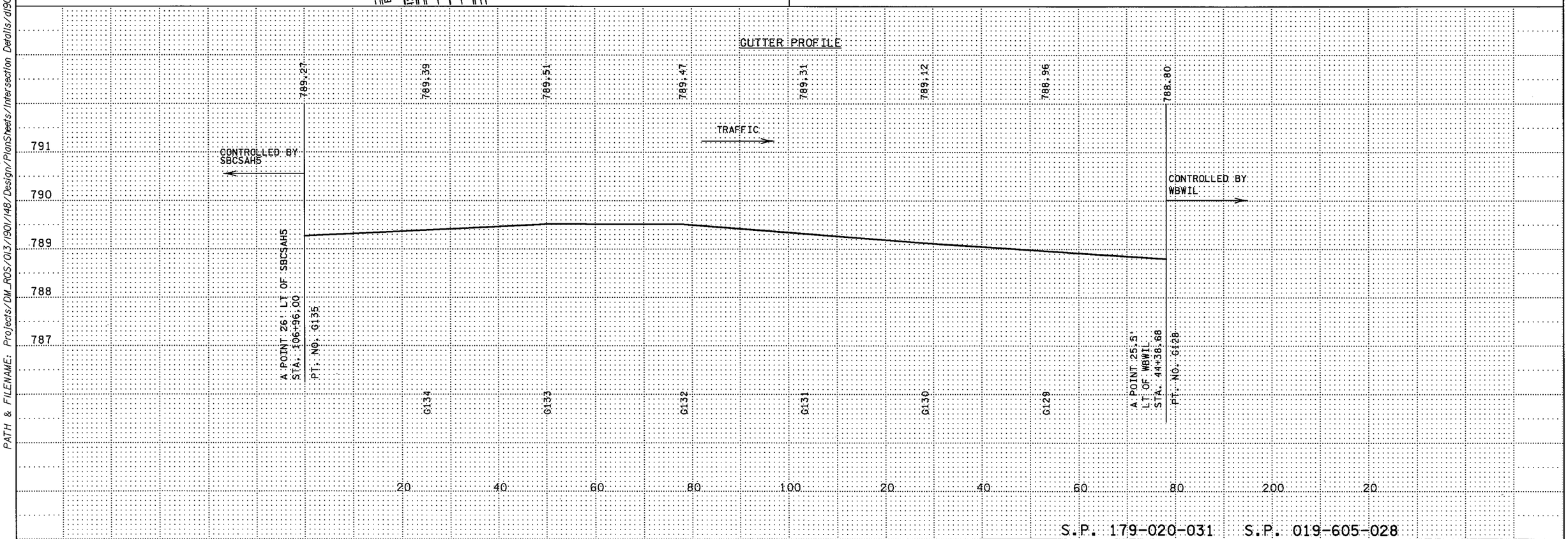

S.P. 179-020-031 S.P. 019-605-028

INTERSECTION DETAILS 4 OF 13

DRAWN BY: MS | CHECKED BY: HS | CERTIFIED BY _____ LICENSED PROFESSIONAL ENGINEER | LIC. NO. 18520 DATE 6/18/12 | STATE PROJ. NO. 1901-148 (T.H. 13) SHEET NO. 232 OF 442 SHEETS

DISTRICT #: METRO
IPLOT NAME: d190l148_Inl
PATH & FILENAME: Projects/DM_ROS/013/1901/148/Design/PlanSheets/Intersection Details/d190l148_Inl.dgn
PLOTTED/REVISED: 12-JUN-2012 13:51

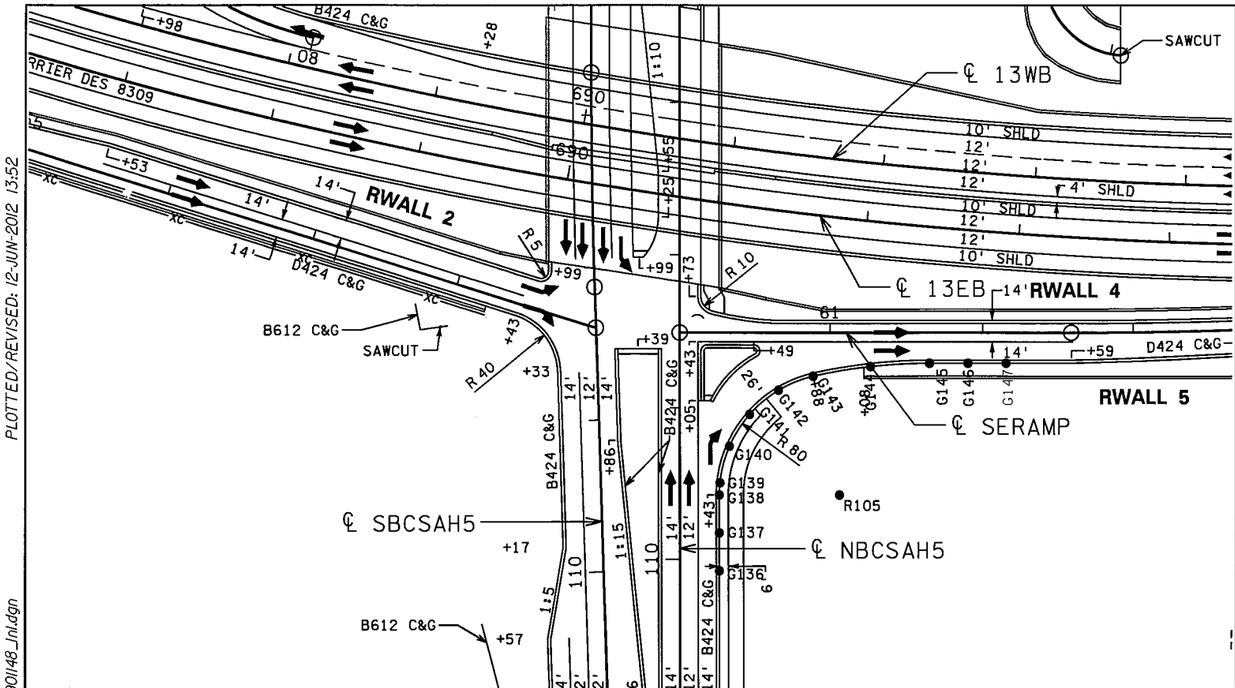

GUTTER PROFILE POINTS

POINT NO.	X	Y	ELEVATION
G136	503116.3452	209436.8502	787.76
G137	503116.3452	209461.8502	787.56
G138	503116.3452	209486.8502	787.31
G139	503116.7398	209494.7857	787.22
G140	503123.0349	209518.8751	786.79
G141	503136.4312	209539.8625	786.23
G142	503155.6310	209555.7149	785.66
G143	503178.7742	209564.8967	784.89
G144	503216.9740	209571.3000	783.57
G145	503255.6474	209573.4432	782.11
G146	503280.6474	209573.4432	781.08
G147	503305.6474	209573.4432	779.97

RADIUS POINTS

POINT NO.	X	Y	RADIUS
R105	503196.3456	209486.8503	80'
R116	503255.6474	209223.4432	350'

NOTE: FOR PEDESTRIAN RAMP DETAILS, SEE SHEET NO. 219

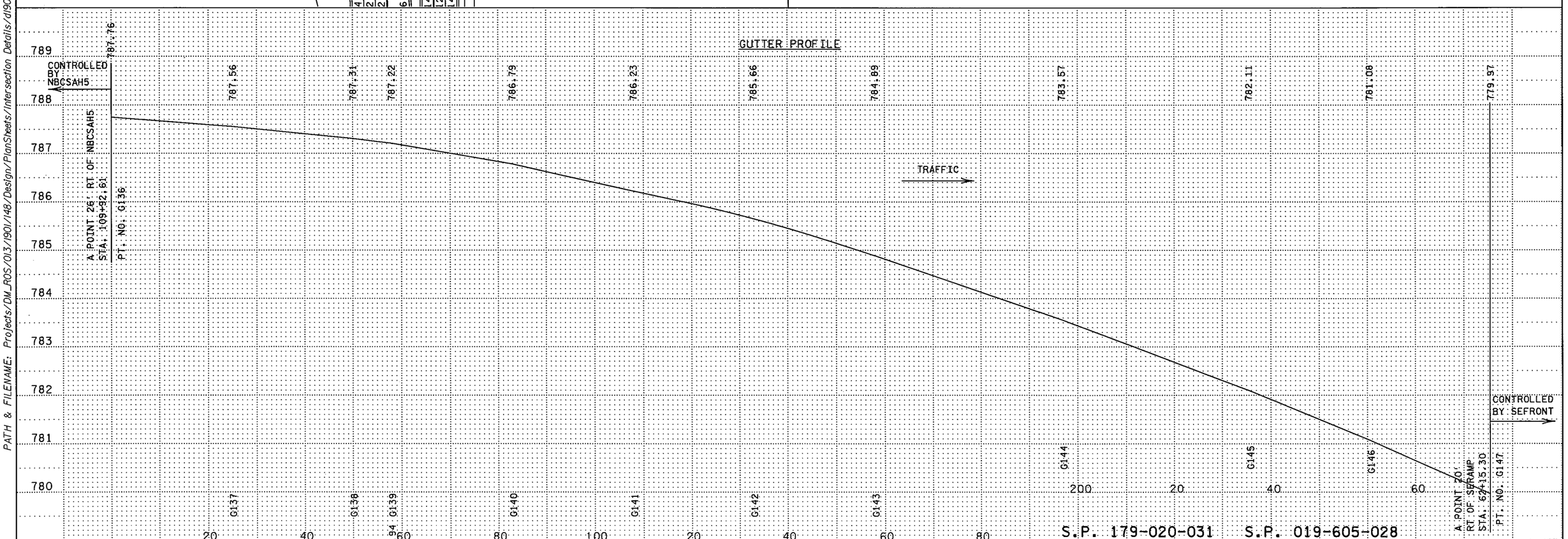

S.P. 179-020-031 S.P. 019-605-028

INTERSECTION DETAILS

5 OF 13

DRAWN BY: MS | CHECKED BY: HS | CERTIFIED BY _____ LICENSED PROFESSIONAL ENGINEER | LIC. NO. 18520 DATE 6/18/12

STATE PROJ. NO. 1901-148 (T.H. 13) SHEET NO. 233 OF 442 SHEETS

DISTRICT #: METRO
IPLOT NAME: d1901148_Jnl
PATH & FILENAME: Projects/DM_ROS/013/1901/148/Design/PlanSheets/Intersection Details/d1901148_Jnl.dgn
PLOTTED/REVISED: 12-JUN-2012 13:52

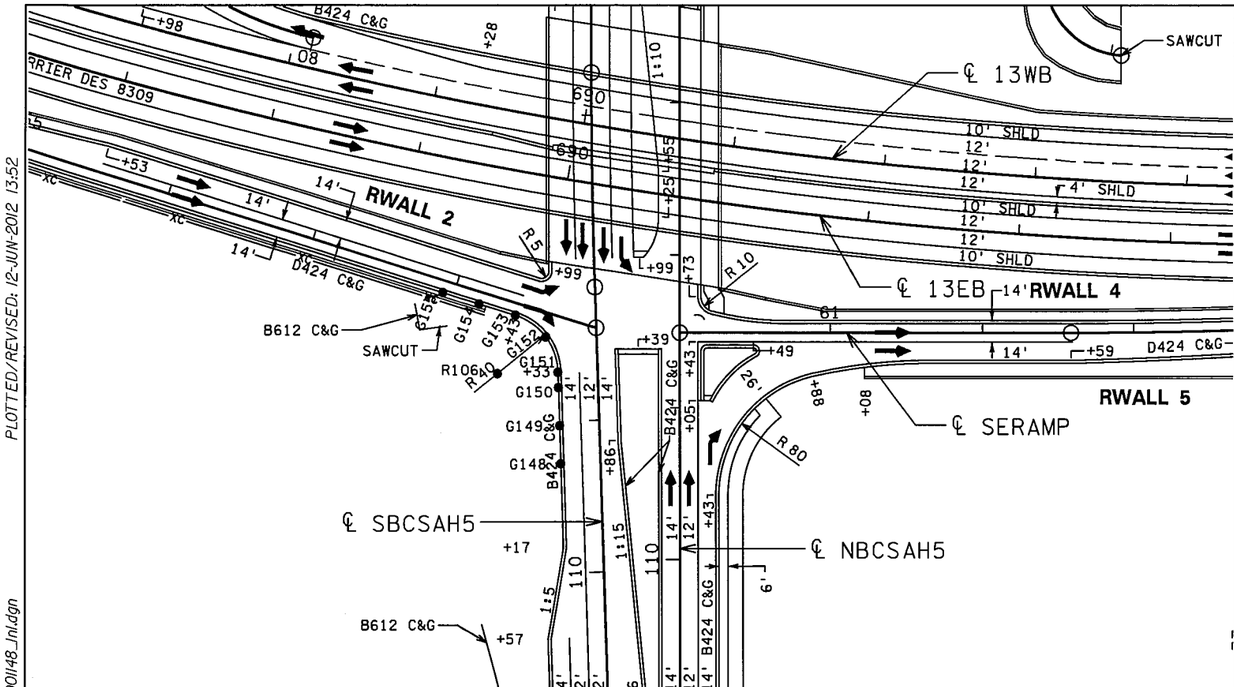

GUTTER PROFILE POINTS

POINT NO.	X	Y	ELEVATION
G148	503012.0474	209507.3648	787.06
G149	503011.2804	209532.3530	786.74
G150	503010.5134	209557.3413	786.36
G151	503010.2058	209567.3637	786.20
G152	503002.1785	209590.6127	785.92
G153	502982.0676	209604.7715	785.65
G154	502958.1911	209612.1817	785.52
G155	502934.3146	209619.5919	785.28

RADIUS POINTS

POINT NO.	X	Y	RADIUS
R106	502970.2114	209566.5690	40'

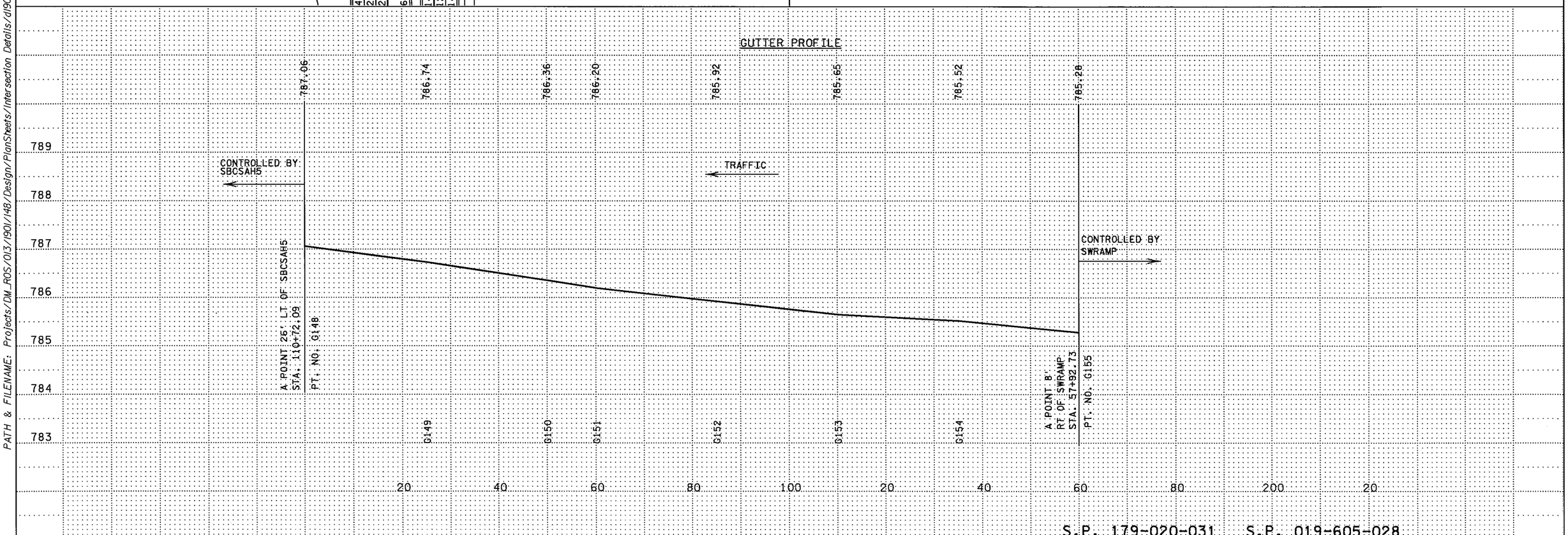

S.P. 179-020-031 S.P. 019-605-028

INTERSECTION DETAILS 6 OF 13

DRAWN BY: MS | CHECKED BY: HS | CERTIFIED BY _____ LICENSED PROFESSIONAL ENGINEER LIC. NO. 18520 DATE 6/18/12

STATE PROJ. NO. 1901-148 (T.H. 13) SHEET NO. 234 OF 442 SHEETS

DISTRICT #: METRO
IPLOT NAME: d190148_Inl
PATH & FILENAME: Projects/DM_ROS/013/1901/148/Design/PlanSheets/Intersection Details/d190148_Inl.dgn
PLOTTED/REVISED: 12-JUN-2012 13:52

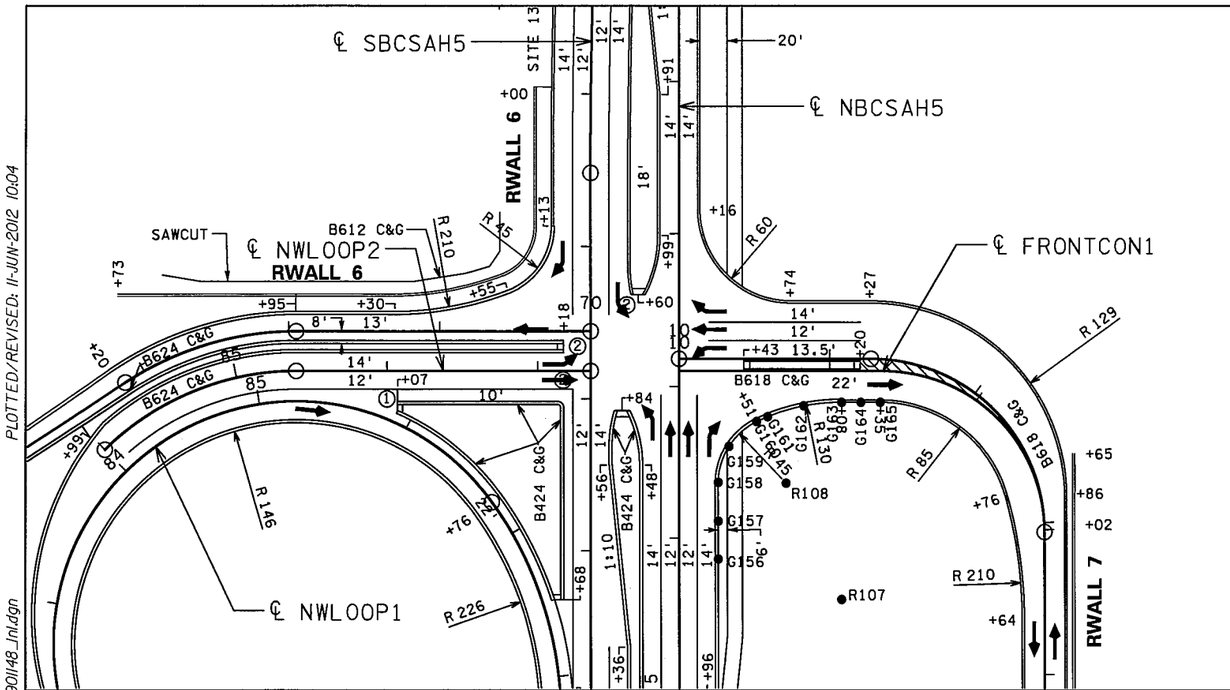

GUTTER PROFILE POINTS

POINT NO.	X	Y	ELEVATION
G156	503116.3452	210030.6017	770.78
G157	503116.3452	210055.6017	769.87
G158	503116.3493	210081.2065	769.01
G159	503123.4353	210104.8471	768.25
G160	503141.9241	210121.1950	767.82
G161	503149.2532	210124.4279	767.72
G162	503173.1834	210131.5289	767.39
G163	503198.0295	210133.9253	767.06
G164	503210.7863	210133.9253	766.89
G165	503223.5432	210133.9253	766.73

RADIUS POINTS

POINT NO.	X	Y	RADIUS
R107	503198.0296	210003.9253	130'
R108	503161.3452	210080.6017	45'

NOTE: FOR PEDESTRIAN RAMP DETAILS, SEE SHEET NO. 220

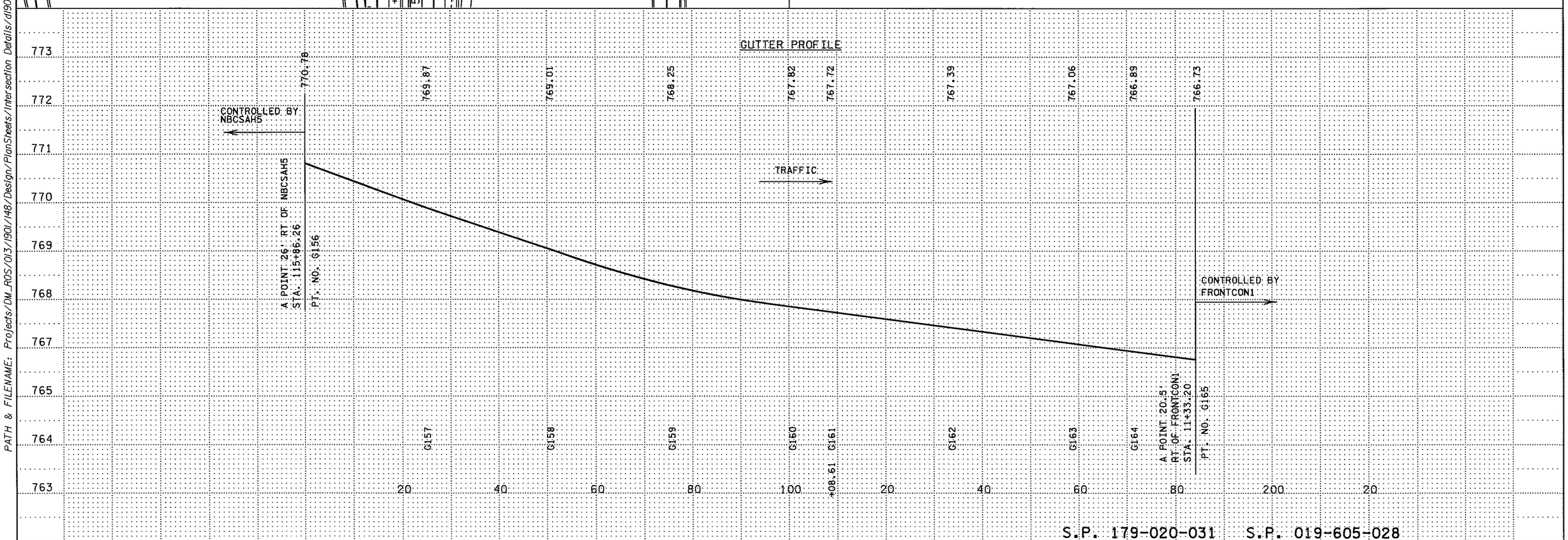

S.P. 179-020-031 S.P. 019-605-028

INTERSECTION DETAILS 7 OF 13

DRAWN BY: MS | CHECKED BY: HS | CERTIFIED BY _____ LICENSED PROFESSIONAL ENGINEER | LIC. NO. 18520 DATE 6/18/12 | STATE PROJ. NO. 1901-148 (T.H. 13) SHEET NO. 235 OF 442 SHEETS

DISTRICT #: METRO
IPLOT NAME: d190148_Inl
PATH & FILENAME: Projects/DM_ROS/013/1901/148/Design/PlanSheets/Intersection Details/d190148_Inl.dgn
PLOTTED/REVISED: 11-JUN-2012 10:04

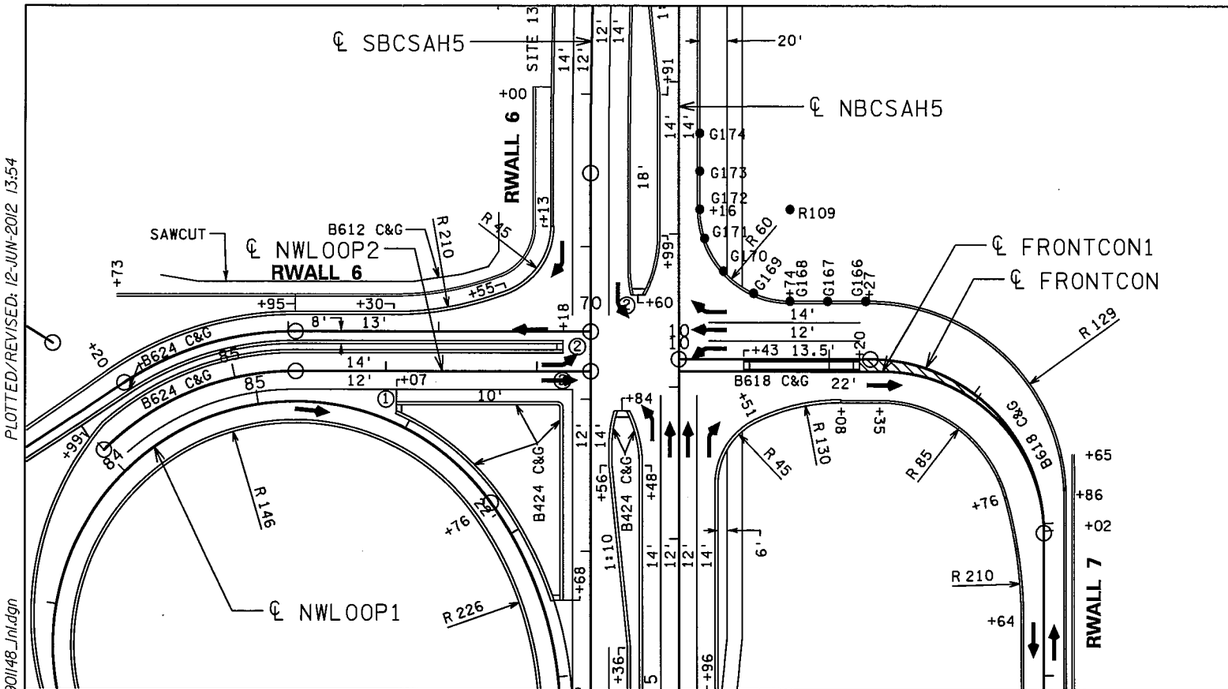

GUTTER PROFILE POINTS

POINT NO.	X	Y	ELEVATION
G166	503214.3452	210200.4253	766.06
G167	503189.3452	210200.4253	765.95
G168	503164.3440	210200.4253	765.84
G169	503140.0636	210205.5582	765.65
G170	503119.9364	210220.0786	765.08
G171	503107.4074	210241.5023	764.33
G172	503104.3452	210260.4253	763.64
G173	503104.3452	210285.4253	762.58
G174	503104.3452	210310.4253	761.45

RADIUS POINTS

POINT NO.	X	Y	RADIUS
R109	503164.3452	210260.4253	60'

NOTE: FOR PEDESTRIAN RAMP DETAILS, SEE SHEET NO. 220.

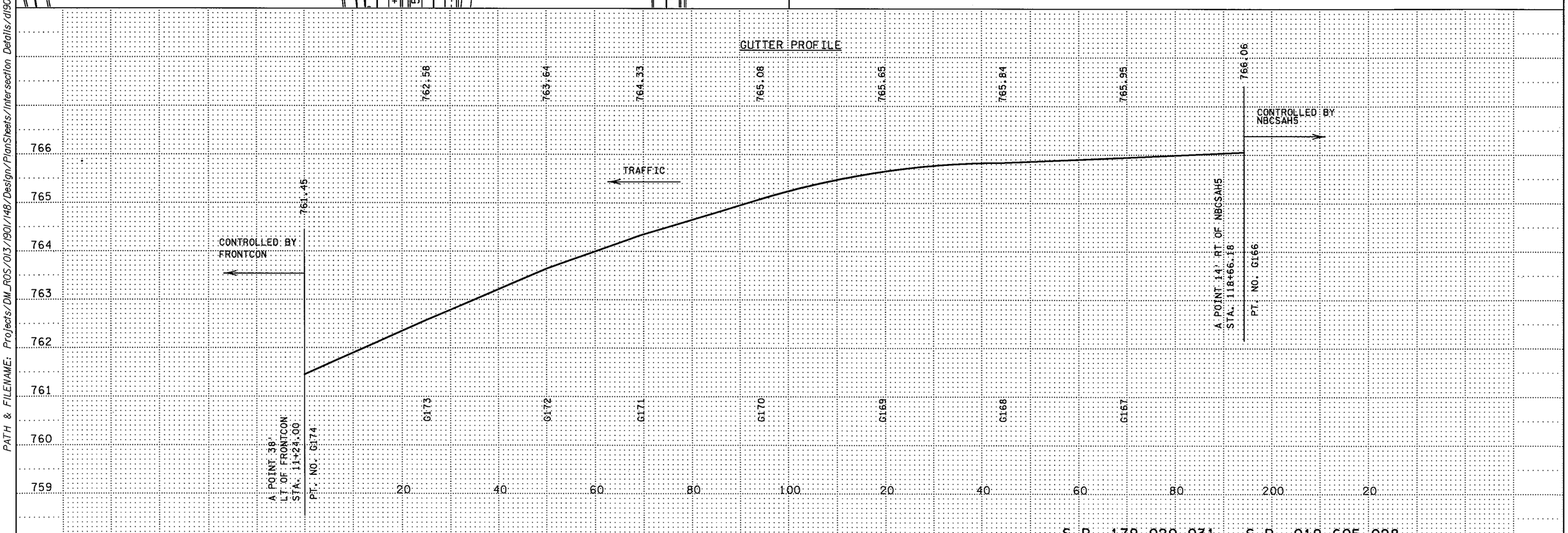

S.P. 179-020-031 S.P. 019-605-028

INTERSECTION DETAILS 8 OF 13

DRAWN BY: MS | CHECKED BY: HS | CERTIFIED BY _____ LICENSED PROFESSIONAL ENGINEER LIC. NO. 18520 DATE 6/18/12

STATE PROJ. NO. 1901-148 (T.H. 13) SHEET NO. 236 OF 442 SHEETS

DISTRICT •: METRO
IPLOT NAME: d190l148_Int
PATH & FILENAME: Projects/DM_ROS/013/1901/148/Design/PlanSheets/Intersection Details/d190l148_Int.dgn
PLOTTED/REVISED: 12-JUN-2012 13:54

NOTE: FOR GENERAL NOTES,

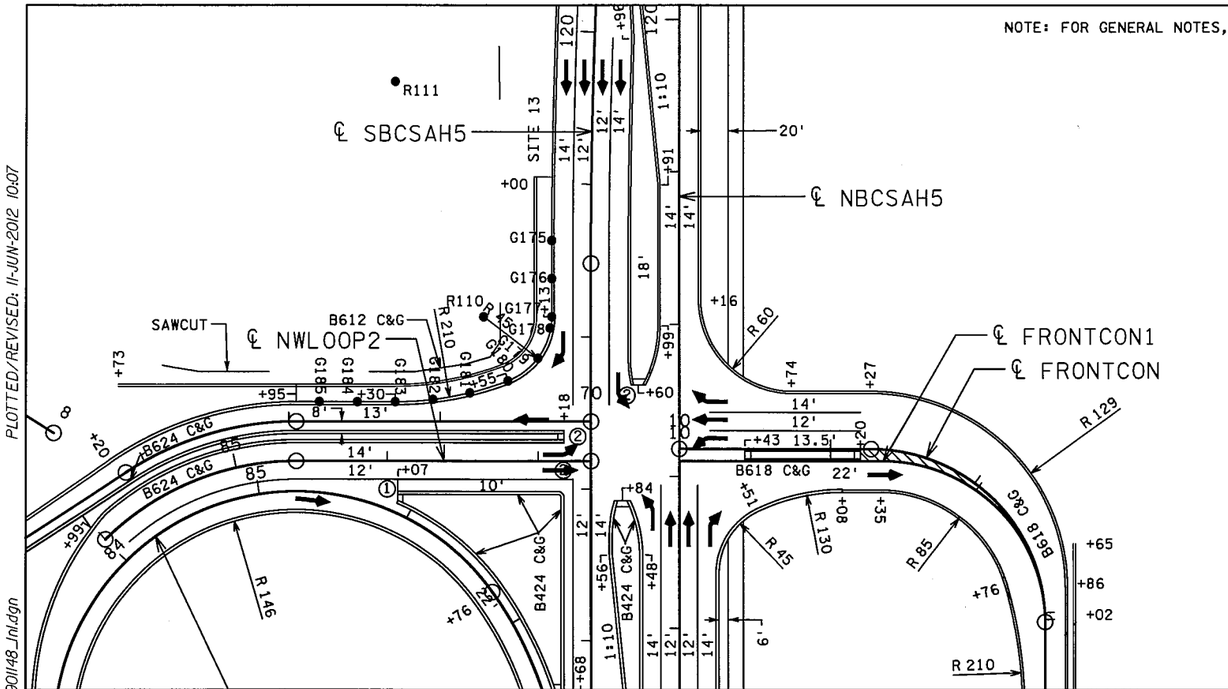

GUTTER PROFILE POINTS

POINT NO.	X	Y	ELEVATION
G175	503006.3702	210299.2533	761.72
G176	503006.3452	210274.2533	762.83
G177	503006.3452	210249.2540	763.85
G178	503006.1413	210244.9742	764.12
G179	502997.1453	210221.9895	764.69
G180	502977.3787	210207.2073	764.99
G181	502952.0845	210199.3496	764.75
G182	502927.4967	210194.9117	764.35
G183	502902.5557	210193.4253	763.87
G184	502877.5557	210193.4253	763.33
G185	502852.5557	210193.4253	762.78

RADIUS POINTS

POINT NO.	X	Y	RADIUS
R110	502961.3452	210249.2540	45'
R111	502902.5557	210403.4253	210'

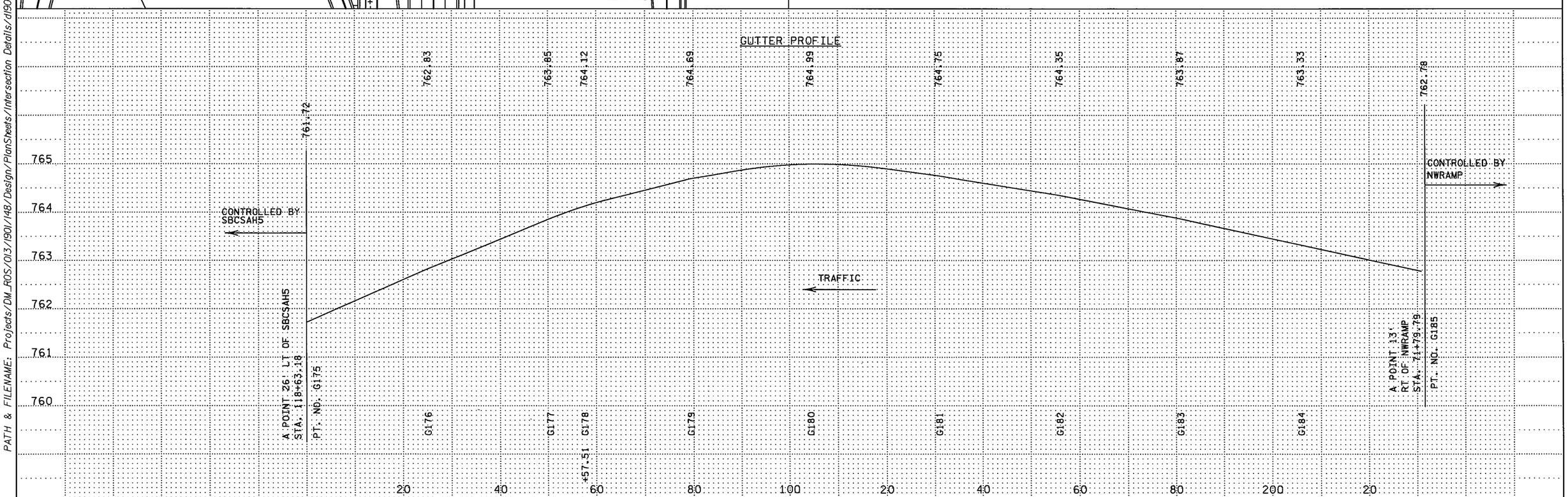

S.P. 179-020-031 S.P. 019-605-028

INTERSECTION DETAILS 9 OF 13

DRAWN BY: MS | CHECKED BY: HS | CERTIFIED BY _____ LICENSED PROFESSIONAL ENGINEER LIC. NO. 18520 DATE 6/18/12

STATE PROJ. NO. 1901-148 (T.H. 13) SHEET NO. 237 OF 442 SHEETS

DISTRICT #: METRO
IPLOT NAME: d190ll48_Inl
PATH & FILENAME: Projects/DM_ROS/013/190l/148/Design/PlanSheets/Intersection Details/d190ll48_Inl.dgn
PLOTTED/REVISED: 11-JUN-2012 10:07

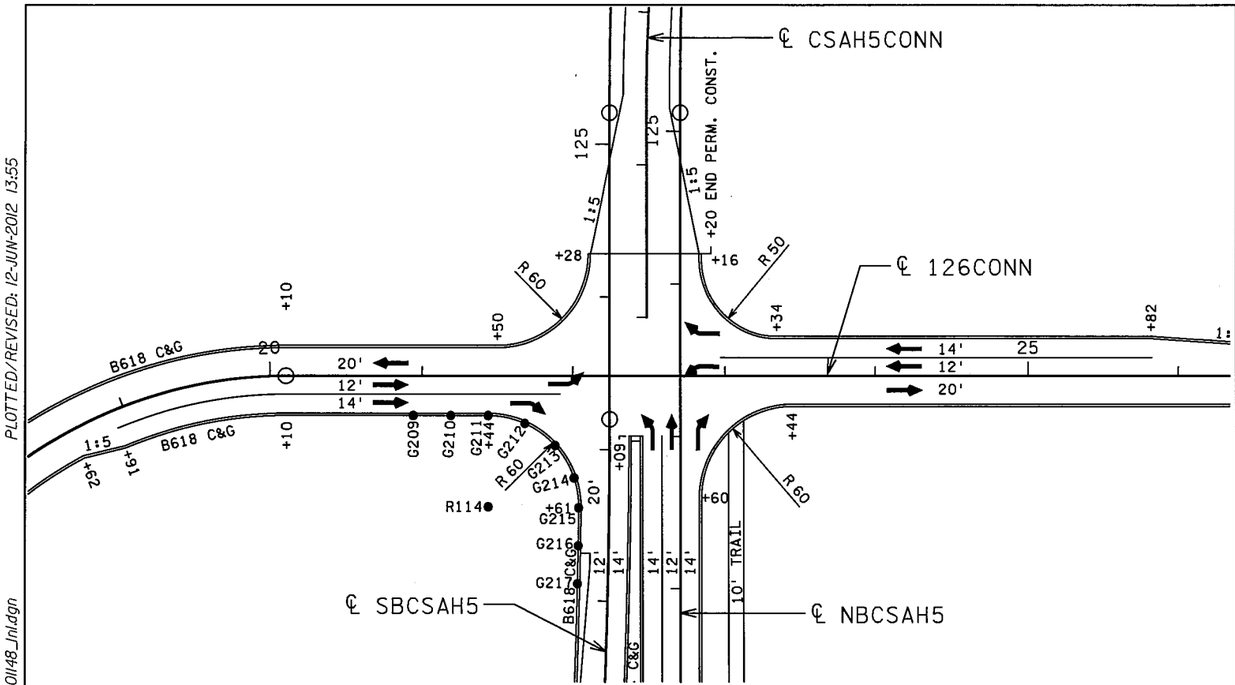

GUTTER PROFILE POINTS

POINT NO.	X	Y	ELEVATION
G209	502913.9773	210758.0888	740.70
G210	502938.9773	210758.0888	740.83
G211	502963.9773	210758.0888	741.04
G212	502988.2601	210752.9554	741.76
G213	503008.3879	210738.4336	742.70
G214	503020.9163	210717.0083	743.59
G215	503023.9724	210697.3219	744.31
G216	503023.5844	210672.3248	745.23
G217	503023.0594	210647.3302	746.23

RADIUS POINTS

POINT NO.	X	Y	RADIUS
R114	502963.9773	210698.0888	60'

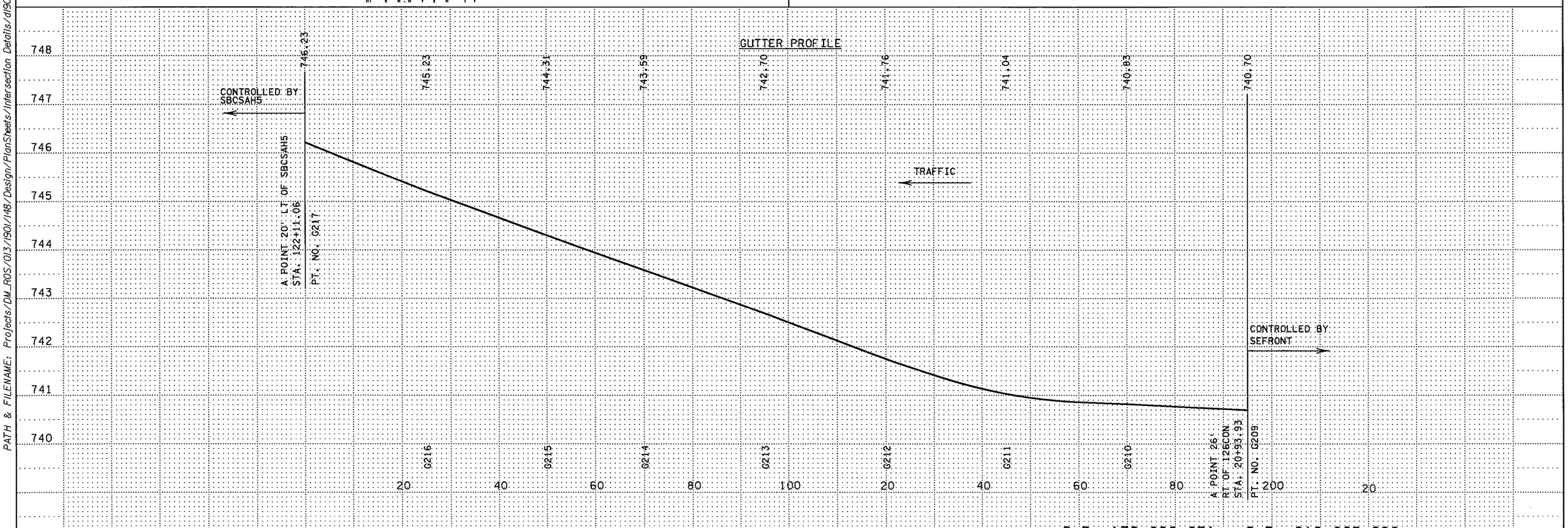

S.P. 179-020-031 S.P. 019-605-028

INTERSECTION DETAILS 10 OF 13

DRAWN BY: MS | CHECKED BY: HS | CERTIFIED BY _____ LICENSED PROFESSIONAL ENGINEER | LIC. NO. 18520 DATE 6/18/12 | STATE PROJ. NO. 1901-148 (T.H. 13) SHEET NO. 238 OF 442 SHEETS

DISTRICT *: METRO
IPLOT NAME: d190l148_Inl
PATH & FILENAME: Projects/DM_ROS/013/190l/148/Design/PlanSheets/Intersection Details/d190l148_Inl.dgn
PLOTTED/REVISED: 12-JUN-2012 13:55

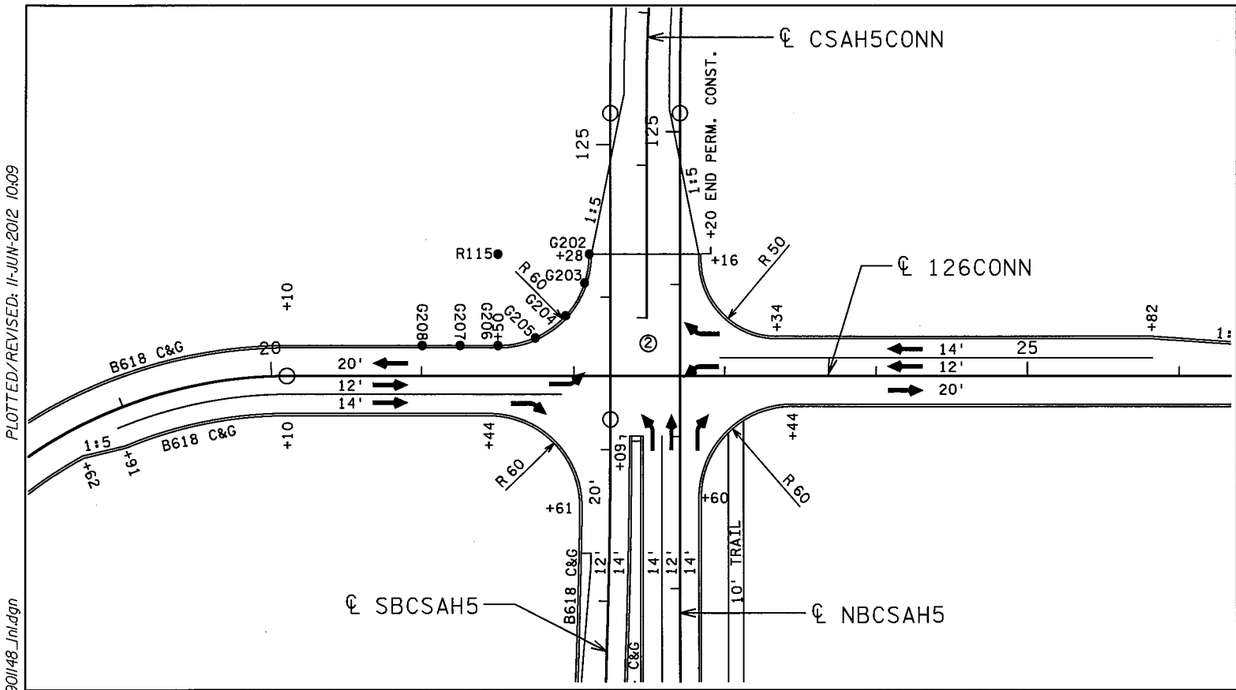

GUTTER PROFILE POINTS

POINT NO.	X	Y	ELEVATION
G202	503030.3452	210864.0888	739.69
G203	503027.2850	210845.1715	740.20
G204	503014.7569	210823.7452	740.62
G205	502994.6292	210809.2227	741.00
G206	502970.3452	210804.0888	741.07
G207	502945.3452	210804.0888	740.98
G208	502920.3452	210804.0888	740.86

RADIUS POINTS

POINT NO.	X	Y	RADIUS
R115	502970.3450	210864.0887	60'

NOTE: FOR PEDESTRIAN RAMP DETAILS, SEE SHEET NO. 221

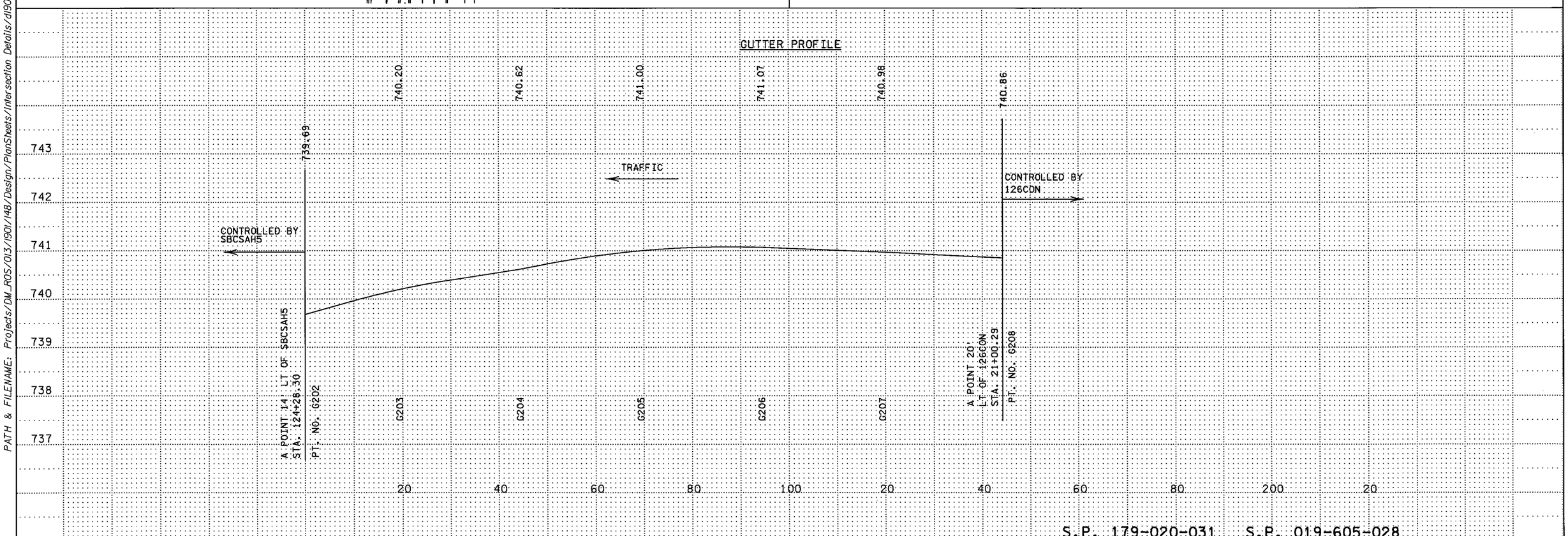

S.P. 179-020-031 S.P. 019-605-028

INTERSECTION DETAILS 11 OF 13

DRAWN BY: MS | CHECKED BY: HS | CERTIFIED BY _____ LICENSED PROFESSIONAL ENGINEER LIC. NO. 18520 DATE 6/18/12

STATE PROJ. NO. 1901-148 (T.H. 13) SHEET NO. 239 OF 442 SHEETS

DISTRICT #: METRO
IPLOT NAME: d1901148_Inl
PATH & FILENAME: Projects/DM_ROS/013/1901/148/Design/PlanSheets/Intersection Details/d1901148_Inl.dgn
PLOTTED/REVISED: 11-JUN-2012 10:09

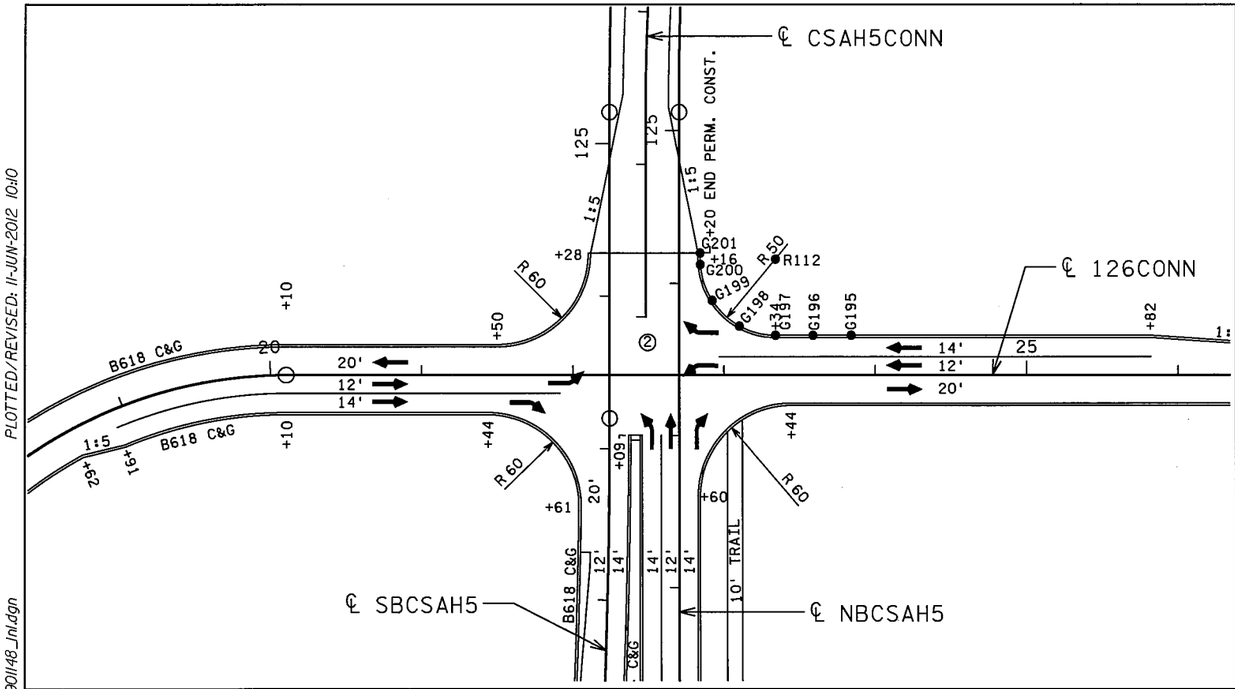

GUTTER PROFILE POINTS

POINT NO.	X	Y	ELEVATION
G195	503204.3452	210810.0888	740.78
G196	503179.3452	210810.0888	740.91
G197	503154.3452	210810.0888	741.03
G198	503130.3739	210816.2097	740.94
G199	503112.2717	210833.0737	740.50
G200	503104.4705	210856.5520	739.92
G201	503104.5055	210864.0888	739.68

RADIUS POINTS

POINT NO.	X	Y	RADIUS
R112	503154.3452	210860.0888	50'

NOTE: FOR PEDESTRIAN RAMP DETAILS, SEE SHEET NO. 221.

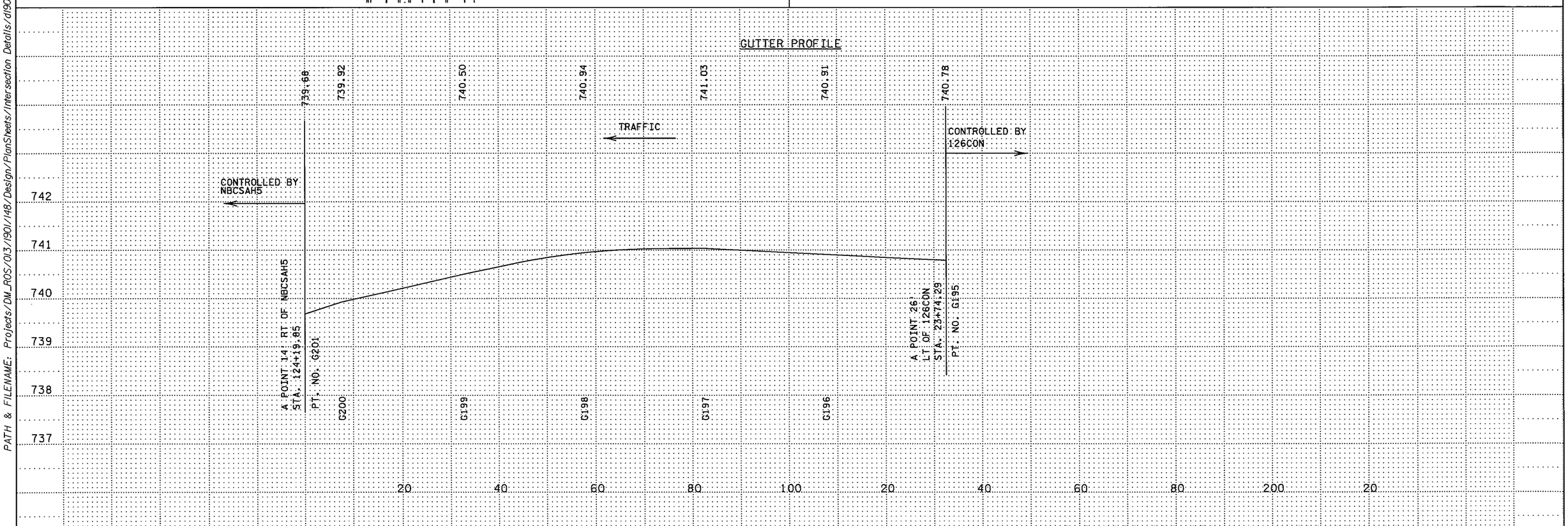

S.P. 179-020-031 S.P. 019-605-028

INTERSECTION DETAILS 12 OF 13

DRAWN BY: MS | CHECKED BY: HS | CERTIFIED BY _____ LICENSED PROFESSIONAL ENGINEER LIC. NO. 18520 DATE 6/18/12

STATE PROJ. NO. 1901-148 (T.H. 13) SHEET NO. 240 OF 442 SHEETS

DISTRICT : METRO
IPLOT NAME: dl901148_Inl
PATH & FILENAME: Projects/DM_ROS/013/1901/148/Design/PlanSheets/Intersection Details/dl901148_Inl.dgn
PLOTTED/REVISED: 11-JUN-2012 10:10

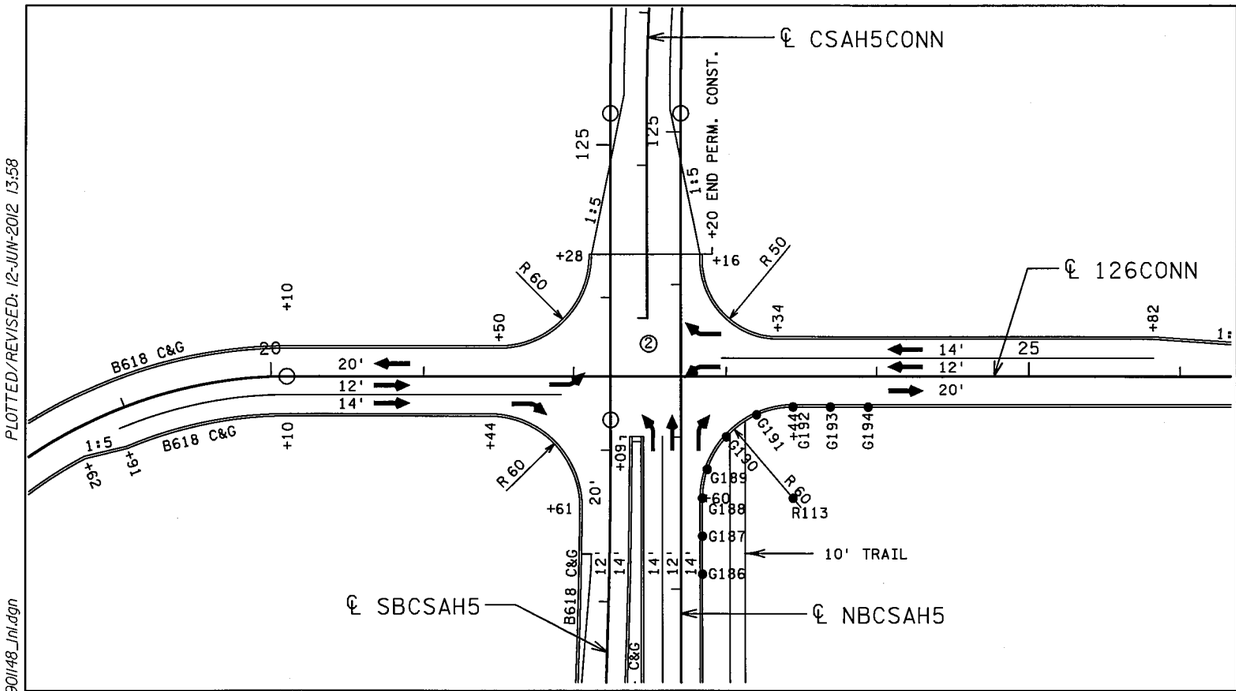

GUTTER PROFILE POINTS

POINT NO.	X	Y	ELEVATION
G186	503104.3452	210654.0888	746.05
G187	503104.3452	210679.0888	745.08
G188	503104.3452	210704.0888	744.19
G189	503107.4062	210723.0083	743.49
G190	503119.9347	210744.4336	742.31
G191	503140.0624	210758.9554	741.41
G192	503164.3453	210764.0888	741.11
G193	503189.3452	210764.0888	740.99
G194	503214.3452	210764.0888	740.86

RADIUS POINTS

POINT NO.	X	Y	RADIUS
R113	503164.3452	210704.0888	60'

NOTE: FOR PEDESTRIAN RAMP DETAILS, SEE SHEET NO. 221.

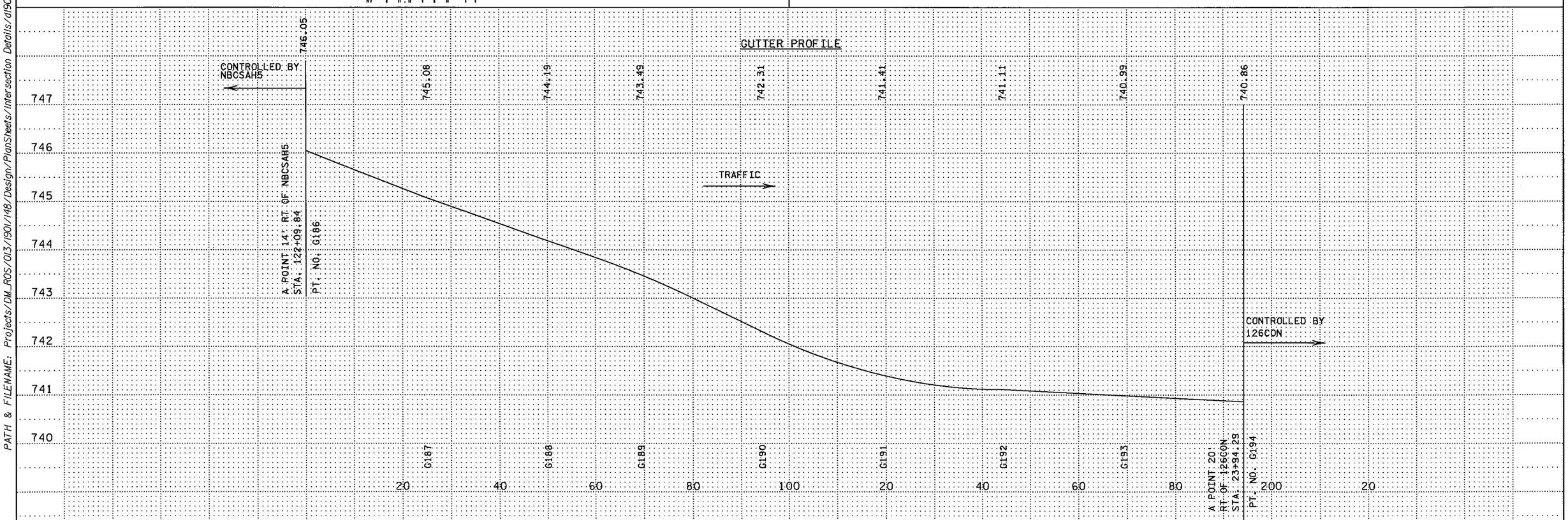

S.P. 179-020-031 S.P. 019-605-028

INTERSECTION DETAILS

13 OF 13

DRAWN BY: MS	CHECKED BY: HS	CERTIFIED BY [signature] LICENSED PROFESSIONAL ENGINEER	LIC. NO. 18520 DATE 6/18/12	STATE PROJ. NO. 1901-148 (T.H. 13)	SHEET NO. 241 OF 442 SHEETS

PLOTTED/REVISED: 12-JUN-2012 13:58
DISTRICT #: METRO
IPLOT NAME: d1901148_Inl
PATH & FILENAME: Projects/DM_ROS/013/1901/148/Design/PlanSheets/Intersection Details/d1901148_Inl.dgn

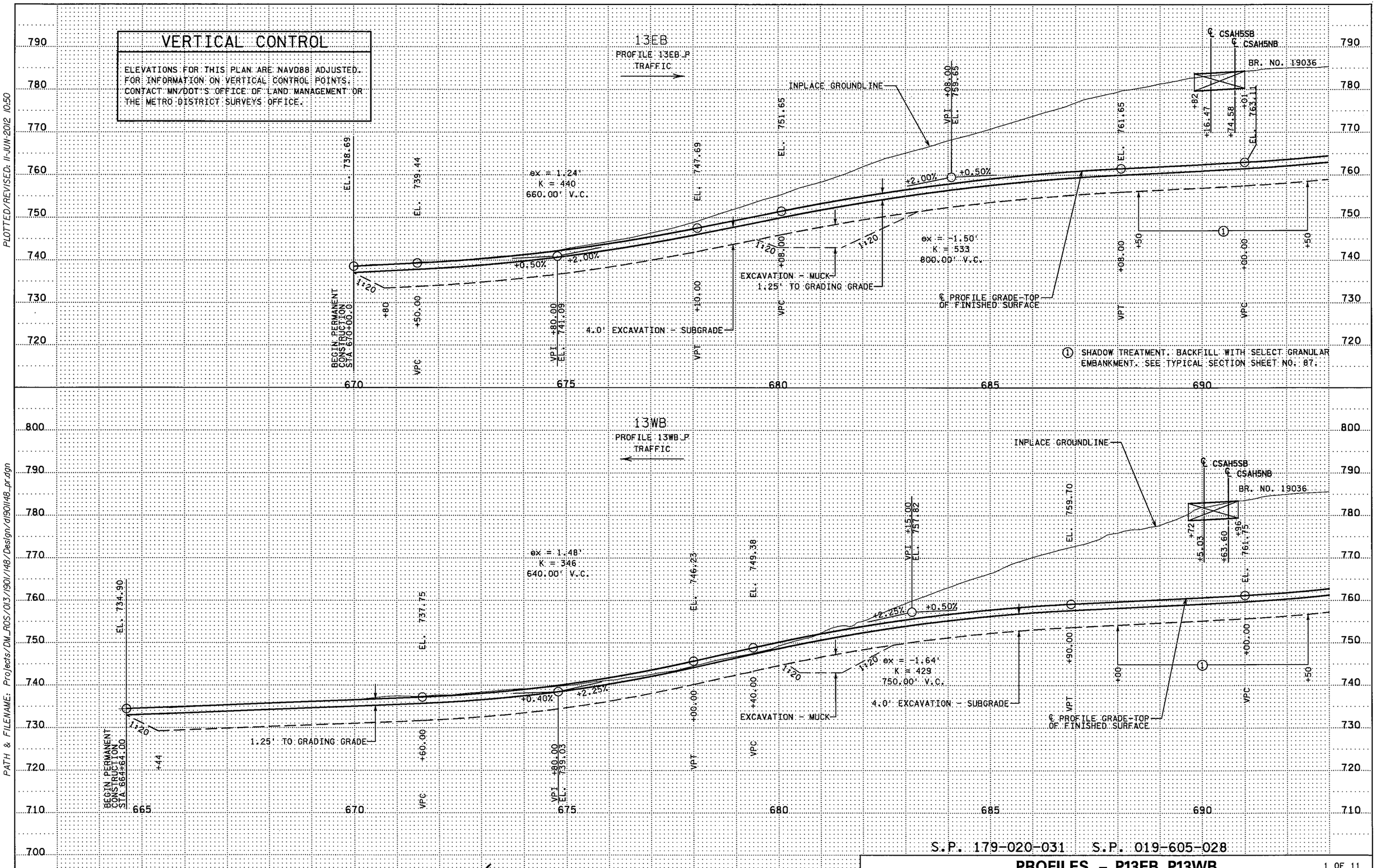

S.P. 179-020-031 S.P. 019-605-028

PROFILES - P13EB, P13WB

1 OF 11

DRAWN BY: GJ	CHECKED BY: HS	CERTIFIED BY [signature] LICENSED PROFESSIONAL ENGINEER	LIC. NO. 18520 DATE 6/18/12	STATE PROJ. NO. 1901-148 (T.H. 13) SHEET NO. 242 OF 442 SHEETS

PLOTTED/REVISED: 11-JUN-2012 10:50

DISTRICT #: METRO
IPLOT NAME: d1901148_pr
PATH & FILENAME: Projects/DM_ROS/013/1901/148/Design/d1901148_pr.dgn

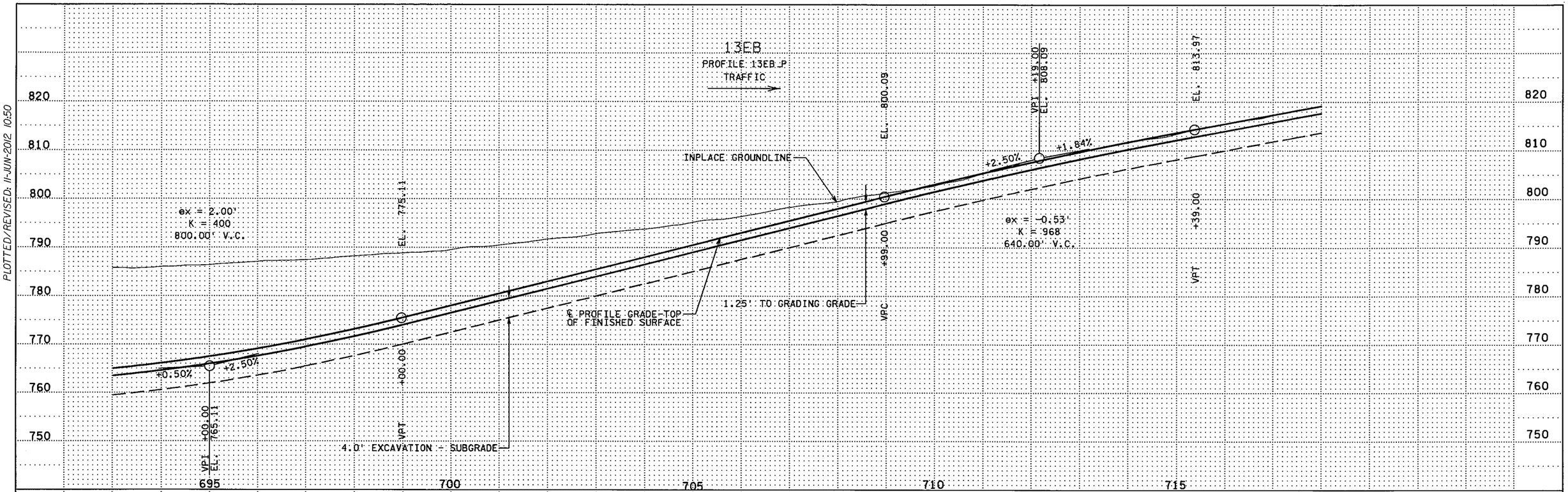

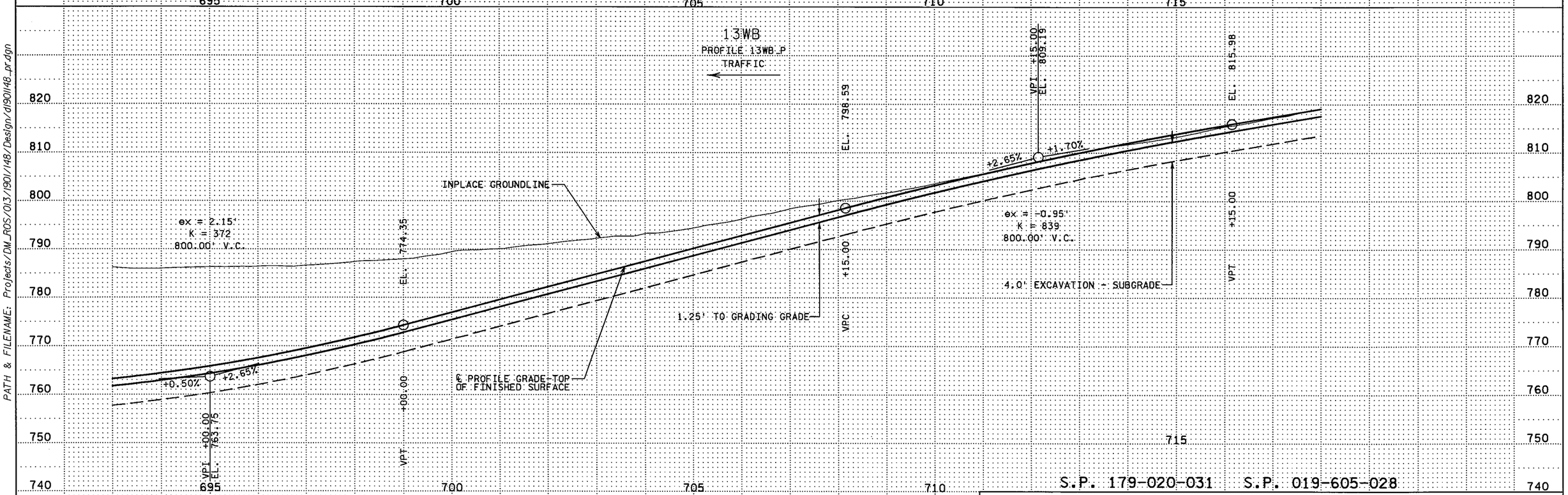

S.P. 179-020-031 S.P. 019-605-028

PROFILES – P13EB, P13WB

2 OF 11

DRAWN BY: GJ | CHECKED BY: HS | CERTIFIED BY _____ LICENSED PROFESSIONAL ENGINEER | LIC. NO. 18520 DATE 6/18/12

STATE PROJ. NO. 1901-148 (T.H. 13) SHEET NO. 243 OF 442 SHEETS

DISTRICT #: METRO
IPLOT NAME: d190l148_pr1
PATH & FILENAME: Projects/DM_ROS/013/1901/148/Design/d190l148_pr.dgn
PLOTTED/REVISED: 11-JUN-2012 10:50

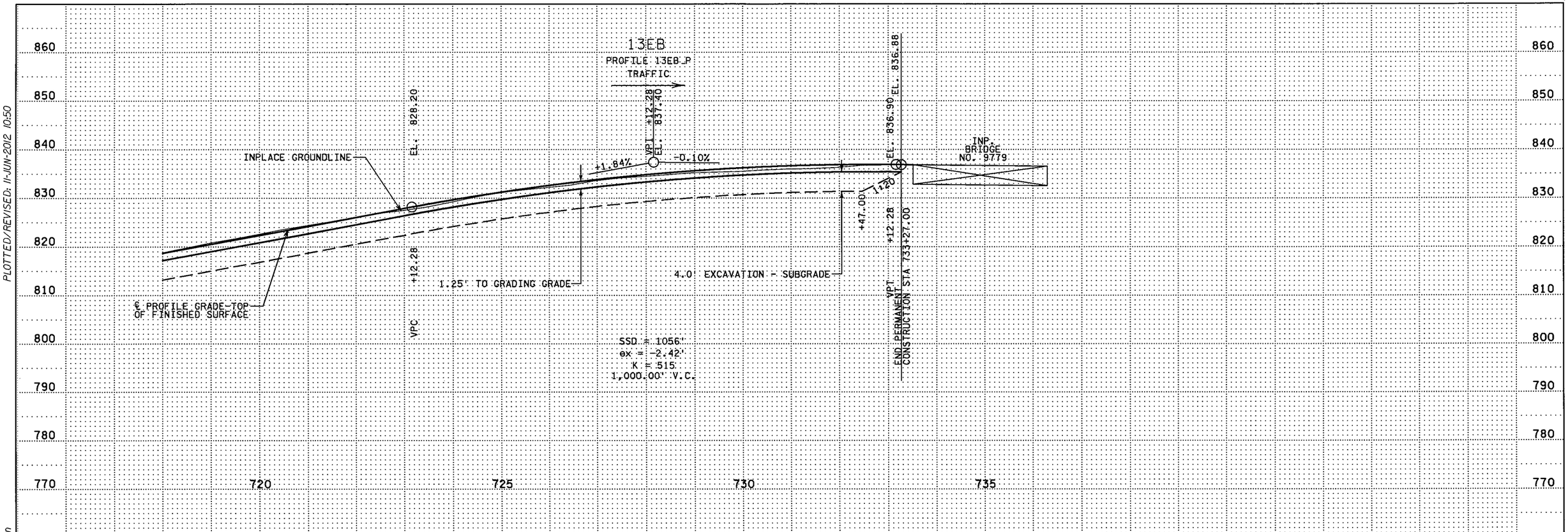

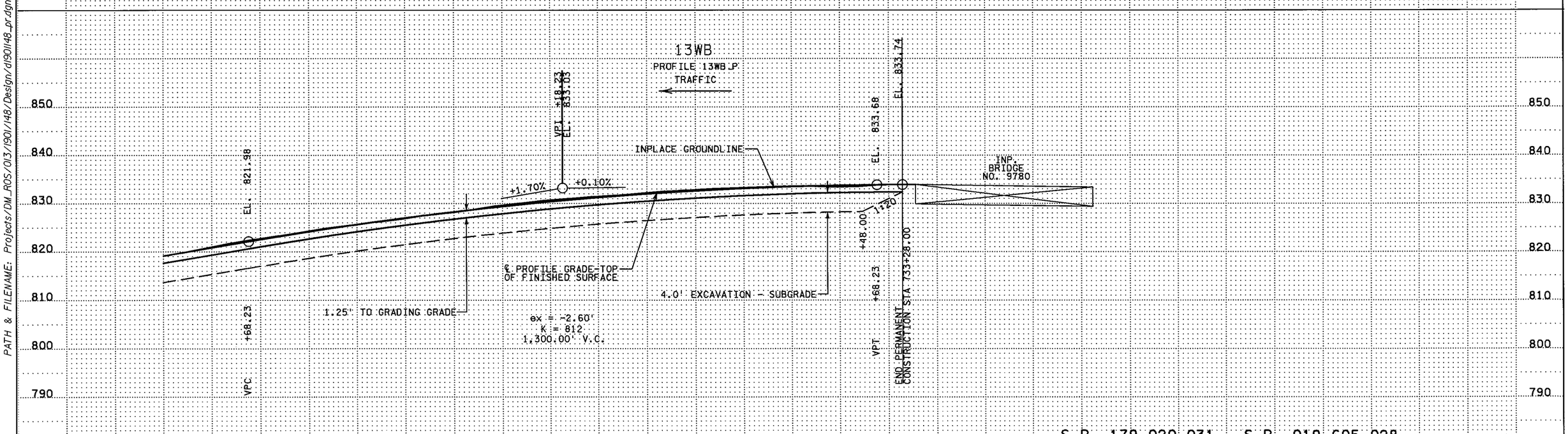

S.P. 179-020-031 S.P. 019-605-028

PROFILES – P13EB, P13WB

3 OF 11

DRAWN BY: GJ | CHECKED BY: HS | CERTIFIED BY _____ LICENSED PROFESSIONAL ENGINEER LIC. NO. 18520 DATE 6/18/12

STATE PROJ. NO. 1901-148 (T.H. 13) SHEET NO. 244 OF 442 SHEETS

DISTRICT *: METRO
IPLOT NAME: d190l148_pr2
PATH & FILENAME: Projects/DM_ROS/013/1901/148/Design/d190l148_pr.dgn
PLOTTED/REVISED: 11-JUN-2012 10:50

PLOTTED/REVISED: 11-JUN-2012 10:50
DISTRICT #: METRO
IPLOT NAME: d1901148_pr3
PATH & FILENAME: Projects/DM_ROS/013/1901/148/Design/d1901148_pr.dgn

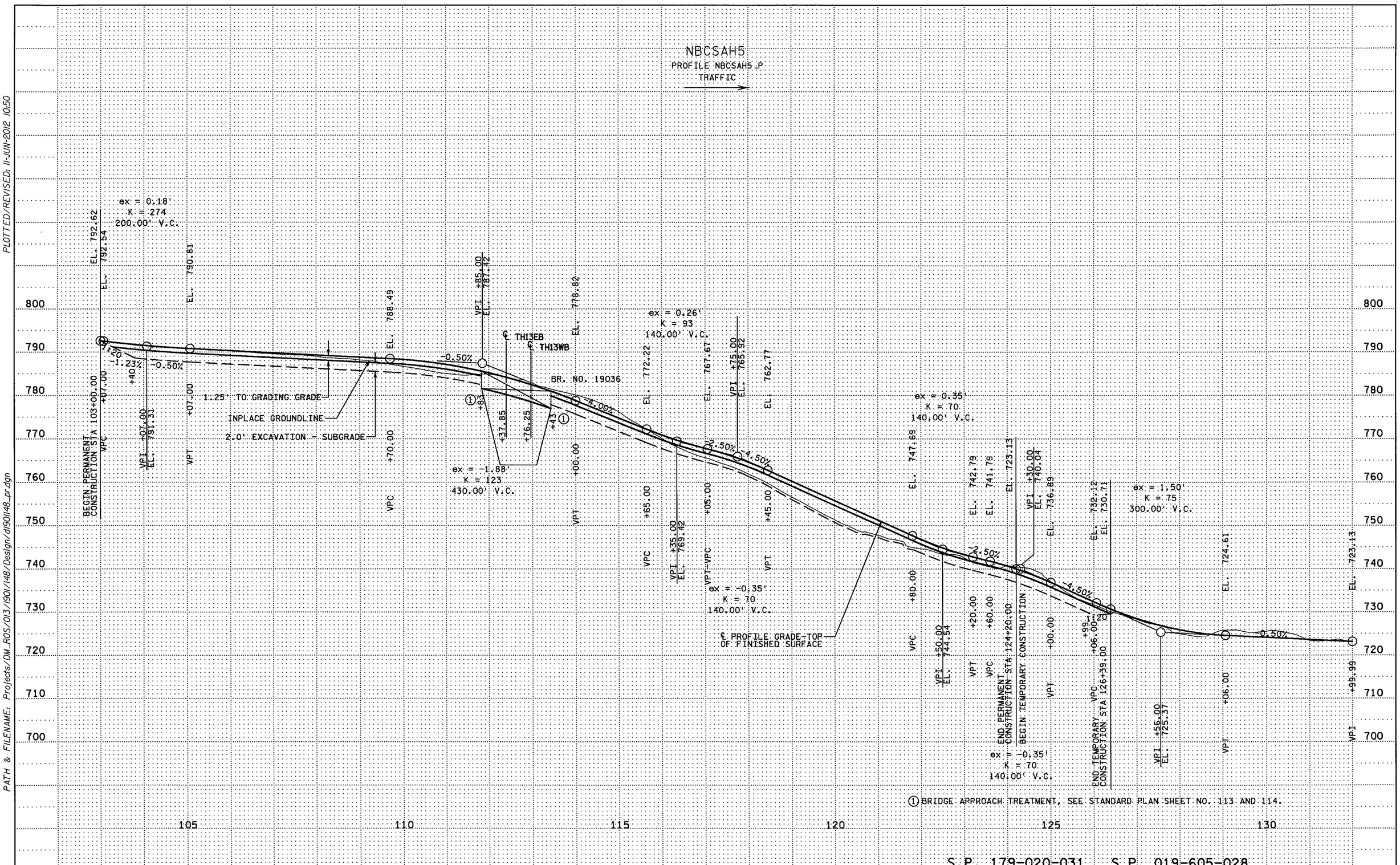

① BRIDGE APPROACH TREATMENT, SEE STANDARD PLAN SHEET NO. 113 AND 114.

S.P. 179-020-031 S.P. 019-605-028

PROFILES - NBCSAH5

4 OF 11

DRAWN BY: GJ	CHECKED BY: HS	CERTIFIED BY _____ LICENSED PROFESSIONAL ENGINEER	LIC. NO. 18520 DATE 6/18/12	STATE PROJ. NO. 1901-148 (T.H. 13) SHEET NO. 245 OF 442 SHEETS

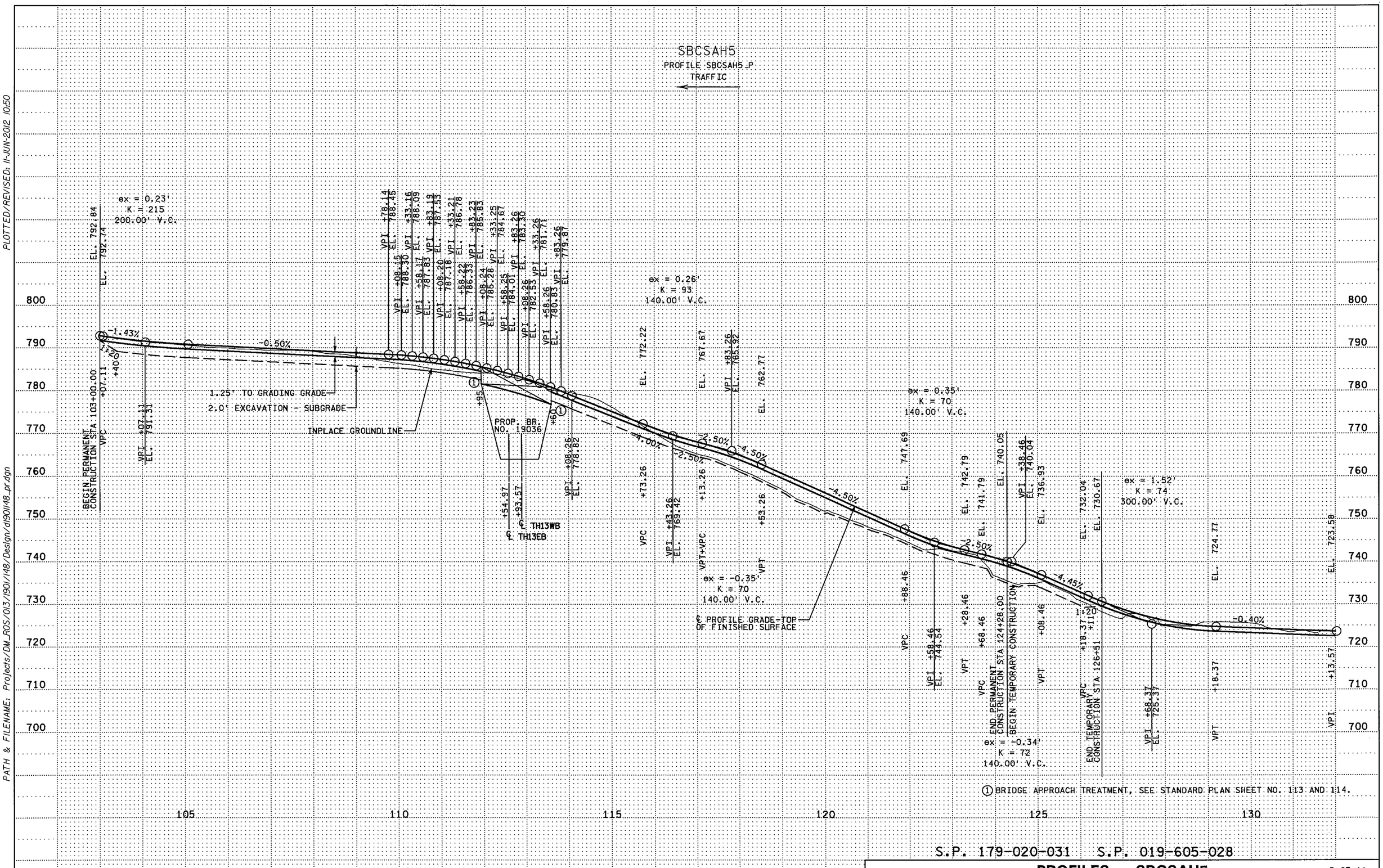

① BRIDGE APPROACH TREATMENT, SEE STANDARD PLAN SHEET NO. 113 AND 114.

S.P. 179-020-031 S.P. 019-605-028

PROFILES - SBCSAH5 5 OF 11

DRAWN BY: GJ | CHECKED BY: HS | CERTIFIED BY _____ LICENSED PROFESSIONAL ENGINEER | LIC. NO. 18520 DATE 6/18/12 | STATE PROJ. NO. 1901-148 (T.H. 13) SHEET NO. 246 OF 442 SHEETS

PLOTTED/REVISED: 11-JUN-2012 10:50

DISTRICT #: METRO
IPLOT NAME: d190148_pr4
PATH & FILENAME: Projects/DM_ROS/013/190/148/Design/d190148_pr.dgn

PLOTTED/REVISED: 11-JUN-2012 10:50

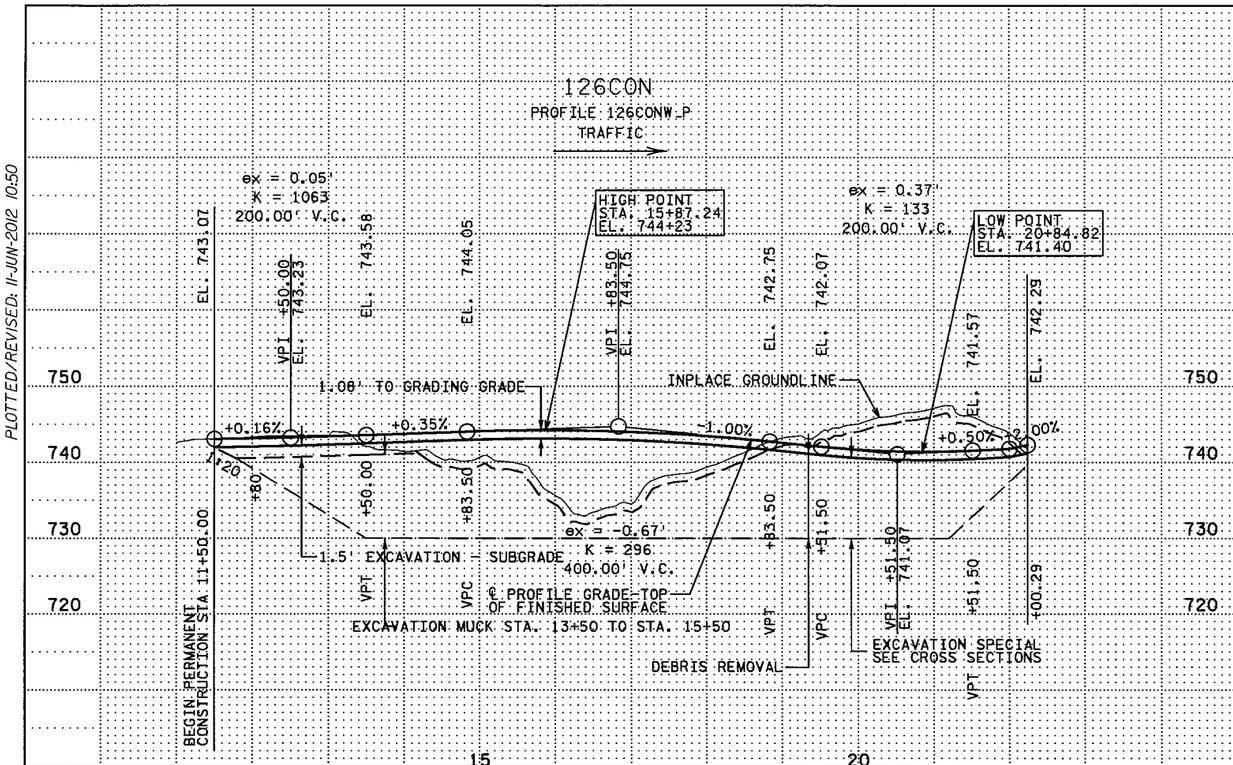

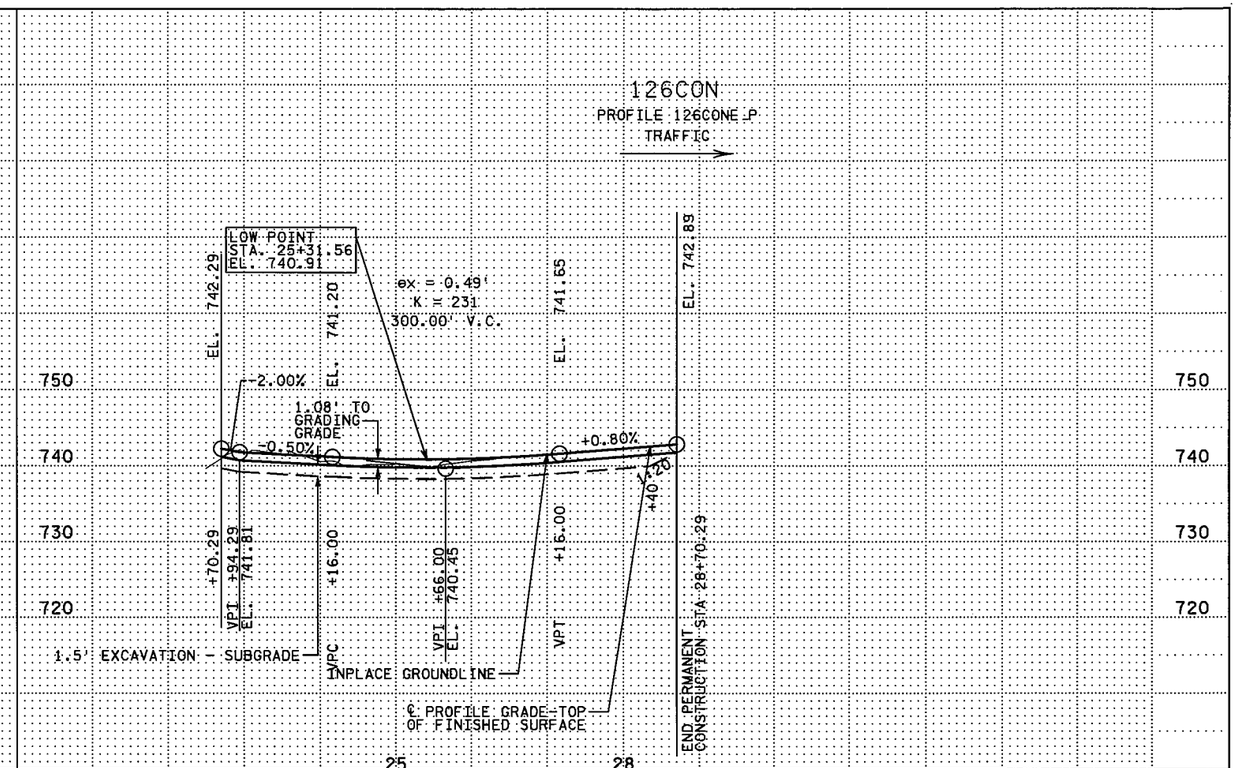

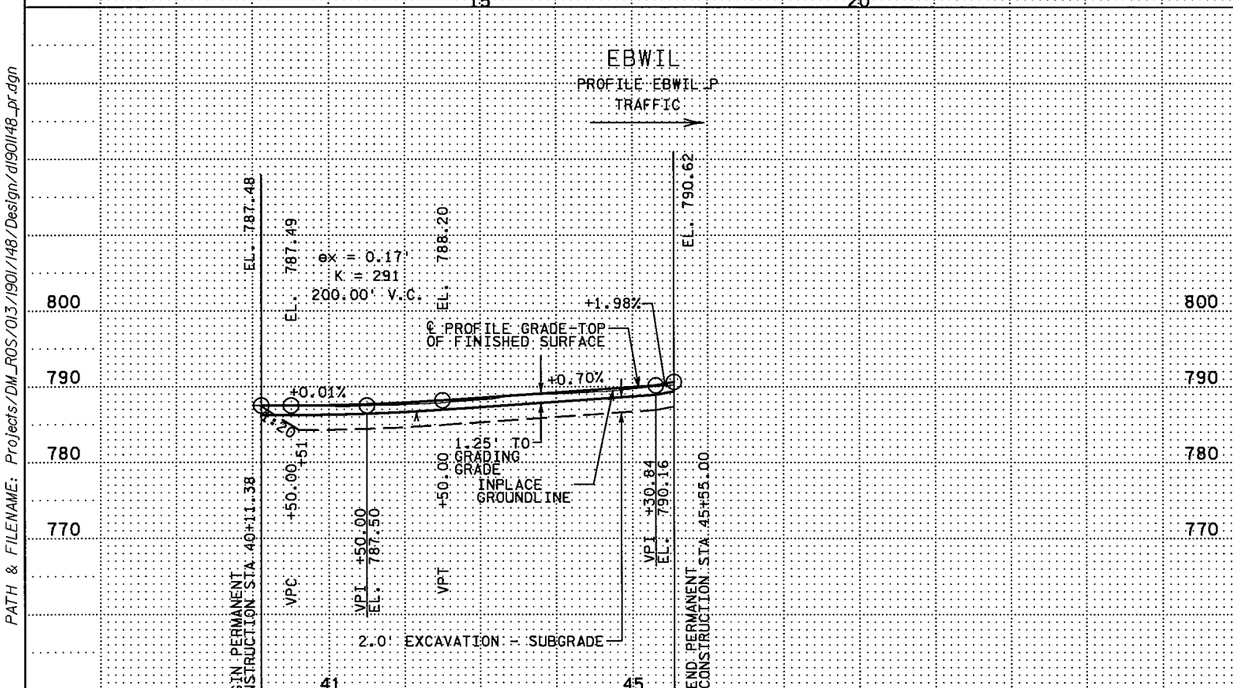

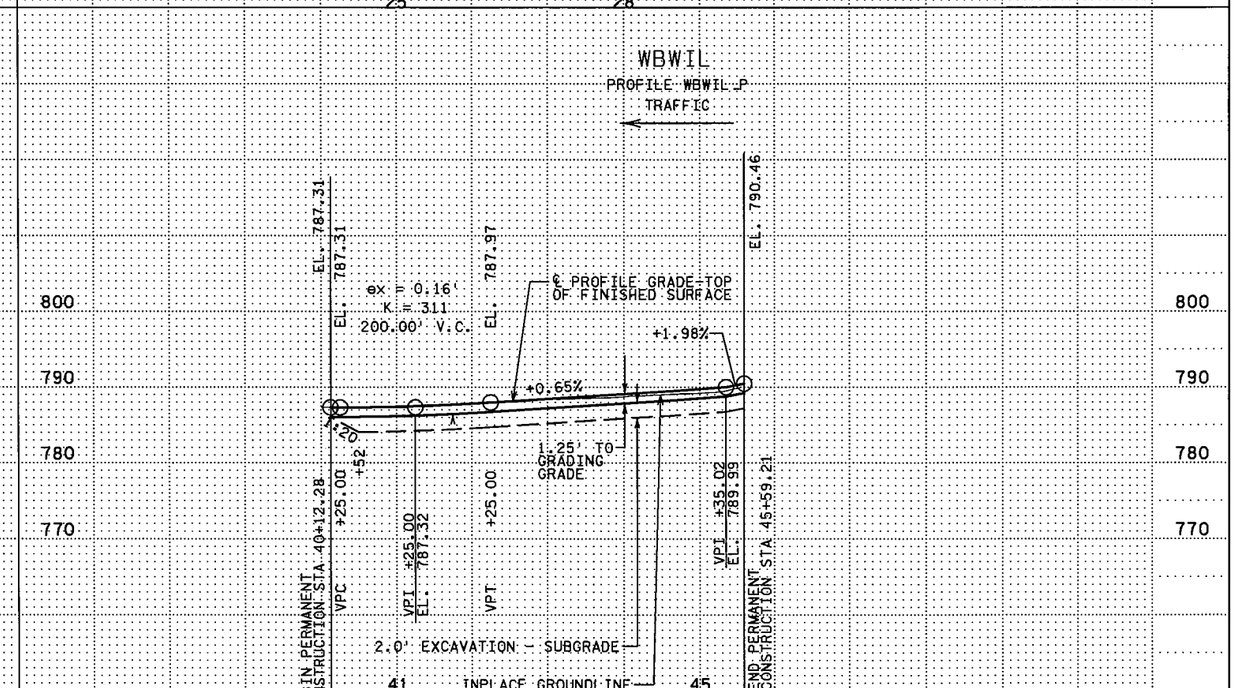

S.P. 179-020-031 S.P. 019-605-028

PROFILES - EBWIL, WBWIL, 126CON

DRAWN BY: GJ | CHECKED BY: HS | CERTIFIED BY _____ LICENSED PROFESSIONAL ENGINEER | LIC. NO. 18520 DATE 6/18/12

STATE PROJ. NO. 1901-148 (T.H. 13) SHEET NO. 247 OF 442 SHEETS

DISTRICT #: METRO
IPLOT NAME: d190l148_pr5
PATH & FILENAME: Projects/DM_ROS/013/1901/148/Design/d190l148_pr.dgn

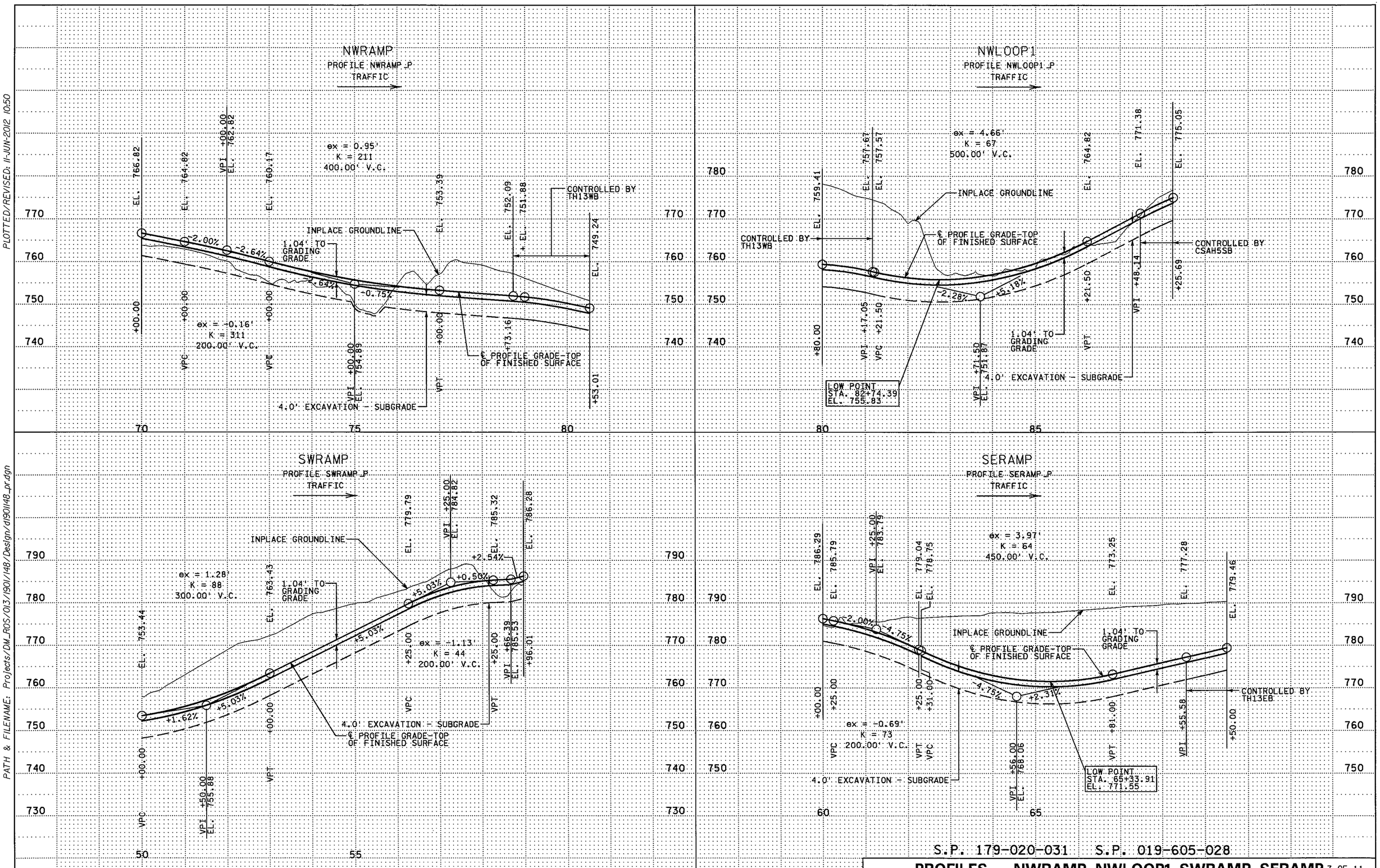

S.P. 179-020-031 S.P. 019-605-028

PROFILES - NWRAMP, NWLOOP1, SWRAMP, SERAMP 7 OF 11

DRAWN BY: GJ | CHECKED BY: HS | CERTIFIED BY _____ LICENSED PROFESSIONAL ENGINEER | LIC. NO. 18520 DATE 6/18/12

STATE PROJ. NO. 1901-148 (T.H. 13) SHEET NO. 248 OF 442 SHEETS

PLOTTED/REVISED: 11-JUN-2012 10:50

DISTRICT #: METRO
IPLOT NAME: d190148_pr6
PATH & FILENAME: Projects/DM_ROS/013/1901/148/Design/d190148_pr.dgn

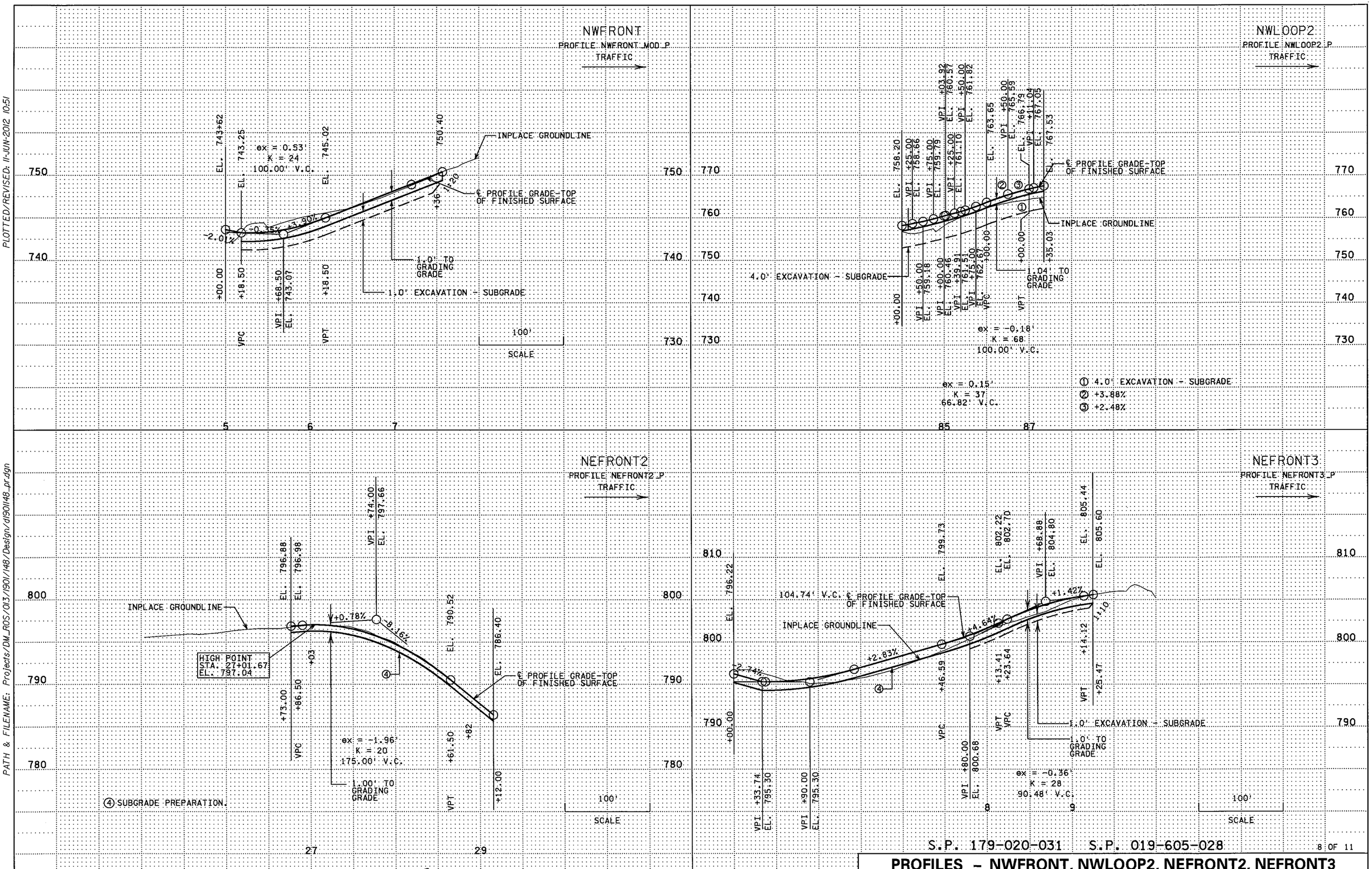

S.P. 179-020-031 S.P. 019-605-028

8 OF 11

PROFILES - NWFRONT, NWLOOP2, NEFRONT2, NEFRONT3

DRAWN BY: GJ	CHECKED BY: HS	CERTIFIED BY [signature] LICENSED PROFESSIONAL ENGINEER	LIC. NO. 18520 DATE 6/18/12	STATE PROJ. NO. 1901-148 (T.H. 13) SHEET NO. 249 OF 442 SHEETS

PLOTTED/REVISED: 11-JUN-2012 10:51

DISTRICT #: METRO
IPLOT NAME: d1901148_pr8
PATH & FILENAME: Projects/DM_ROS/013/1901/148/Design/d1901148_pr.dgn

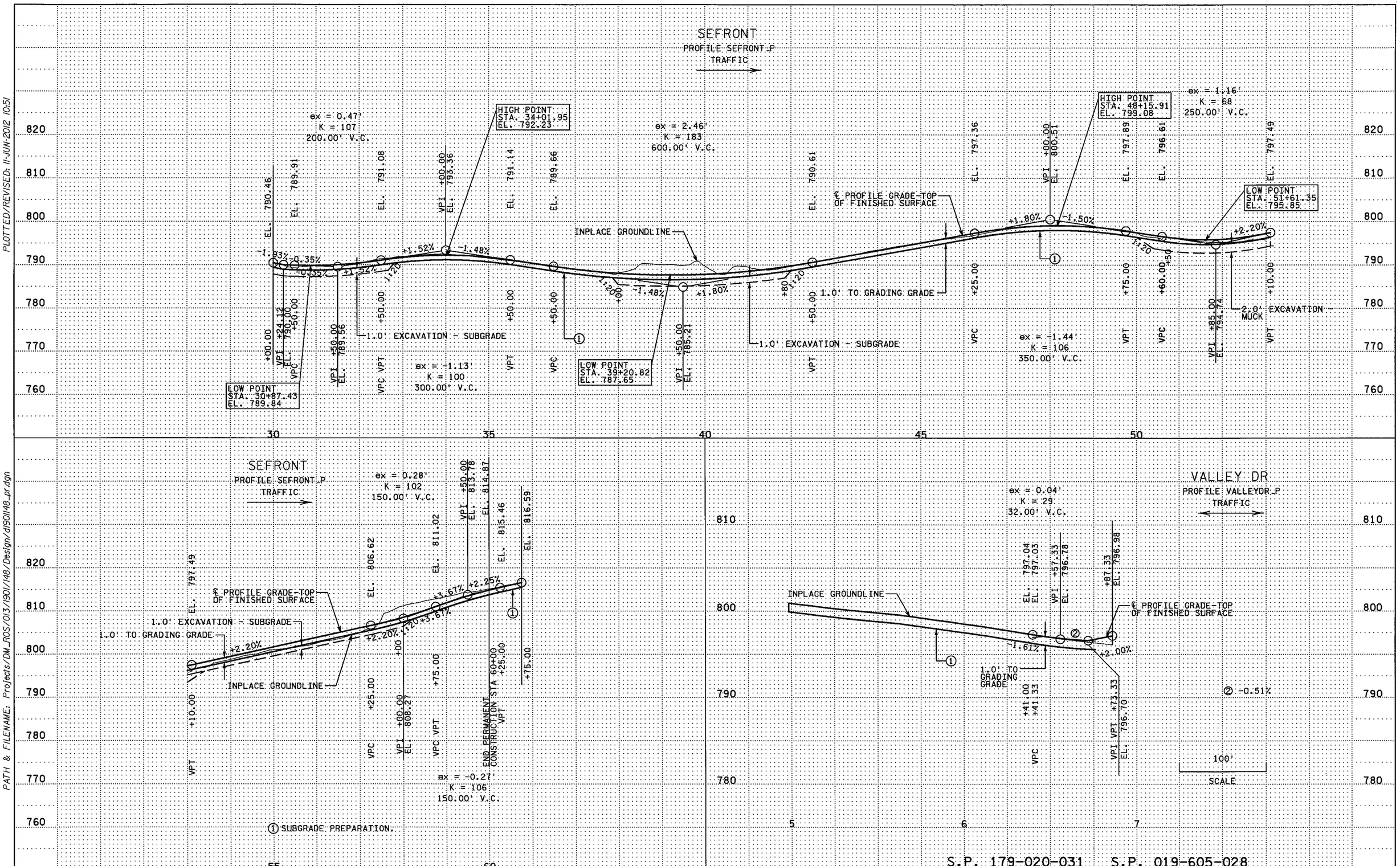

S.P. 179-020-031 S.P. 019-605-028

PROFILES - SEFRONT, VALLEYDR

9 OF 11

DRAWN BY: GJ | CHECKED BY: HS | CERTIFIED BY _____ LICENSED PROFESSIONAL ENGINEER | LIC. NO. 18520 DATE 6/18/12

STATE PROJ. NO. 1901-148 (T.H. 13) SHEET NO. 250 OF 442 SHEETS

PLOTTED/REVISED: 11-JUN-2012 10:51

DISTRICT *: METRO
IPLOT NAME: d1901148_pr9
PATH & FILENAME: Projects/DM_ROS/013/1901/148/Design/d1901148_pr.dgn

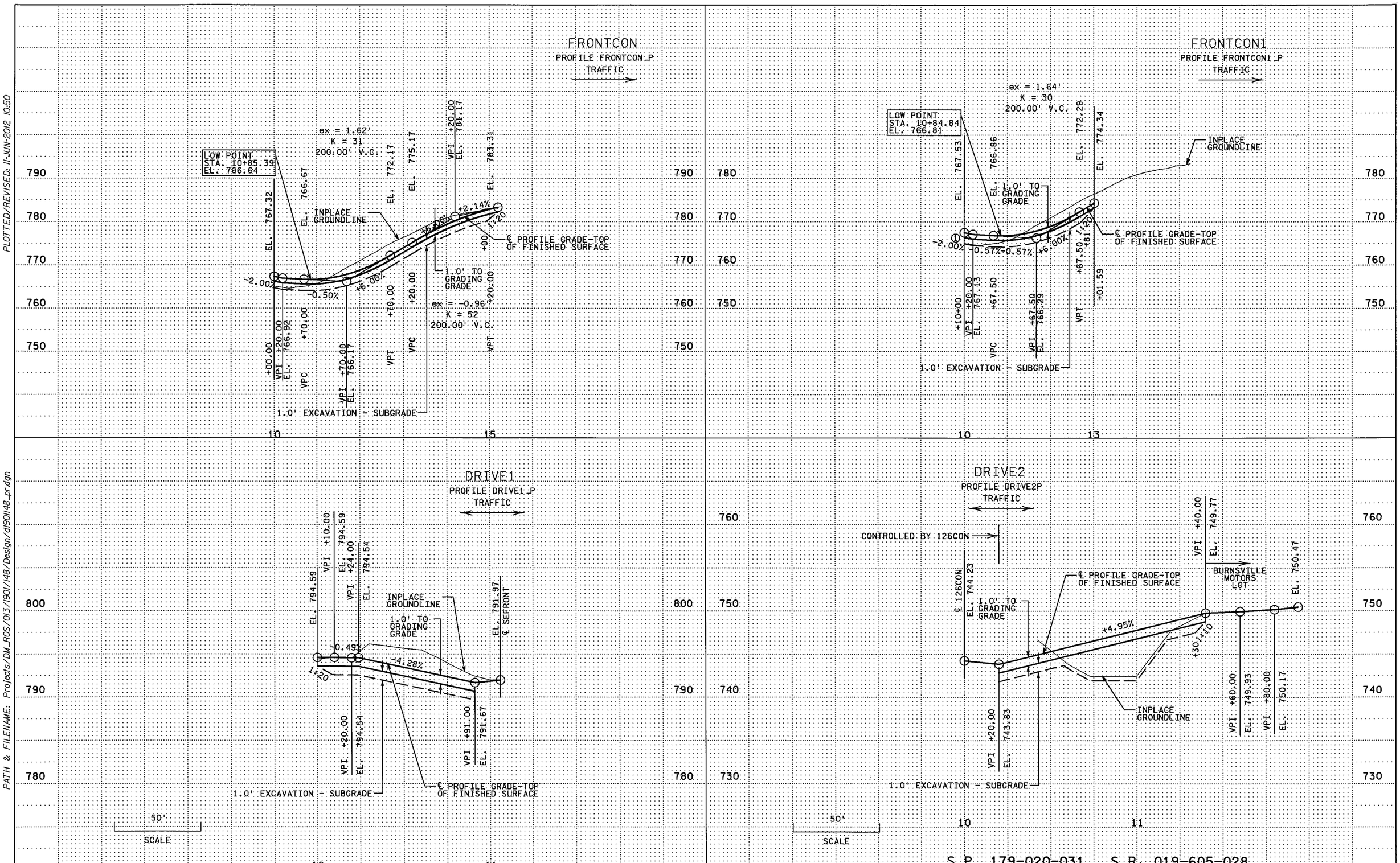

S.P. 179-020-031 S.P. 019-605-028

PROFILES - FRONTCON,FRONTCON1,DRIVE1,DRIVE2 10 OF 11

DRAWN BY: GJ	CHECKED BY: HS	CERTIFIED BY [signature] LICENSED PROFESSIONAL ENGINEER	LIC. NO. 18520 DATE 6/18/12	STATE PROJ. NO. 1901-148 (T.H. 13) SHEET NO. 251 OF 442 SHEETS

PLOTTED/REVISED: 11-JUN-2012 10:50

DISTRICT #: METRO
IPLOT NAME: d1901148_pr7
PATH & FILENAME: Projects/DM_ROS/013/1901/148/Design/d1901148_pr.dgn

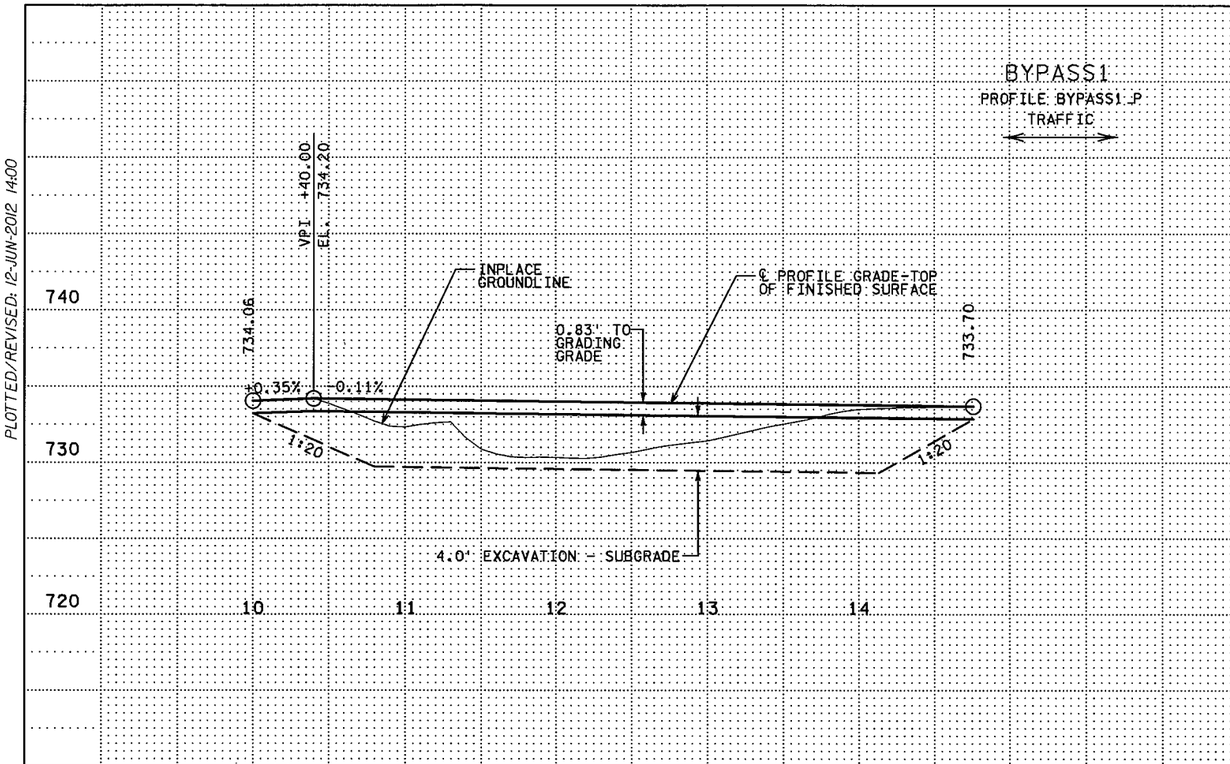

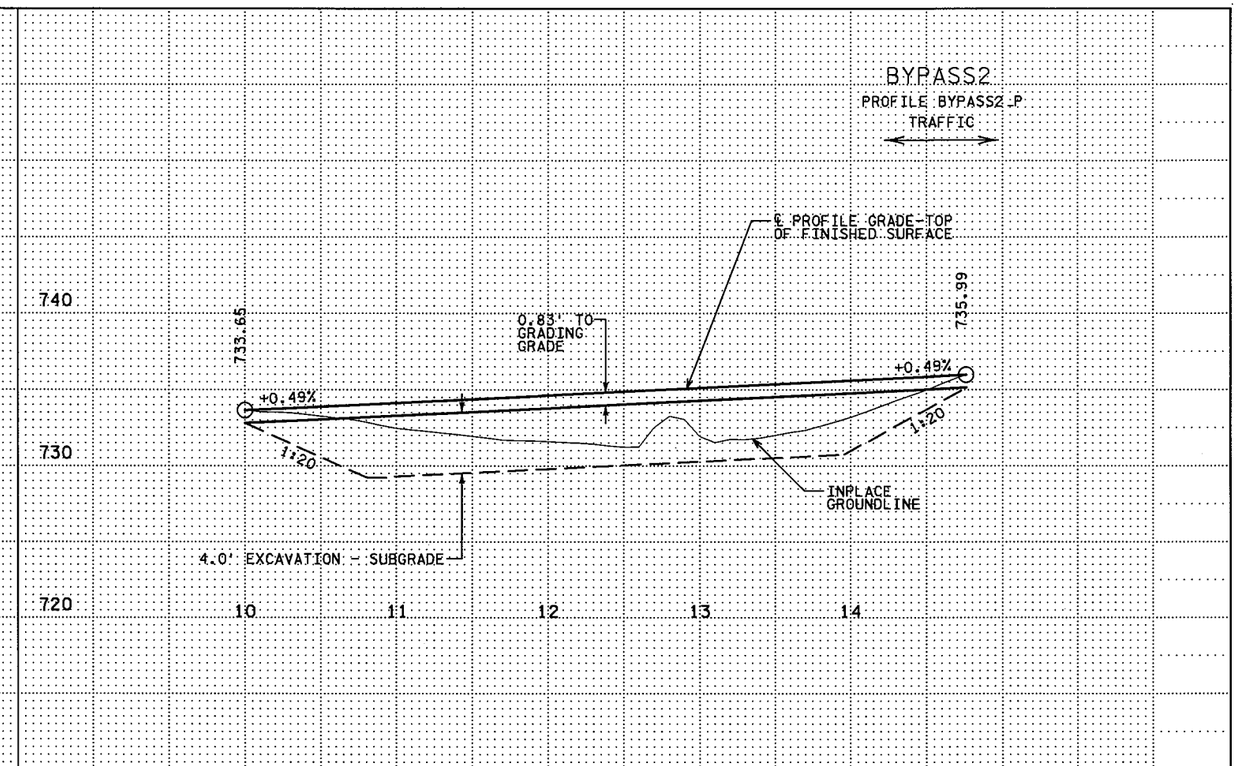

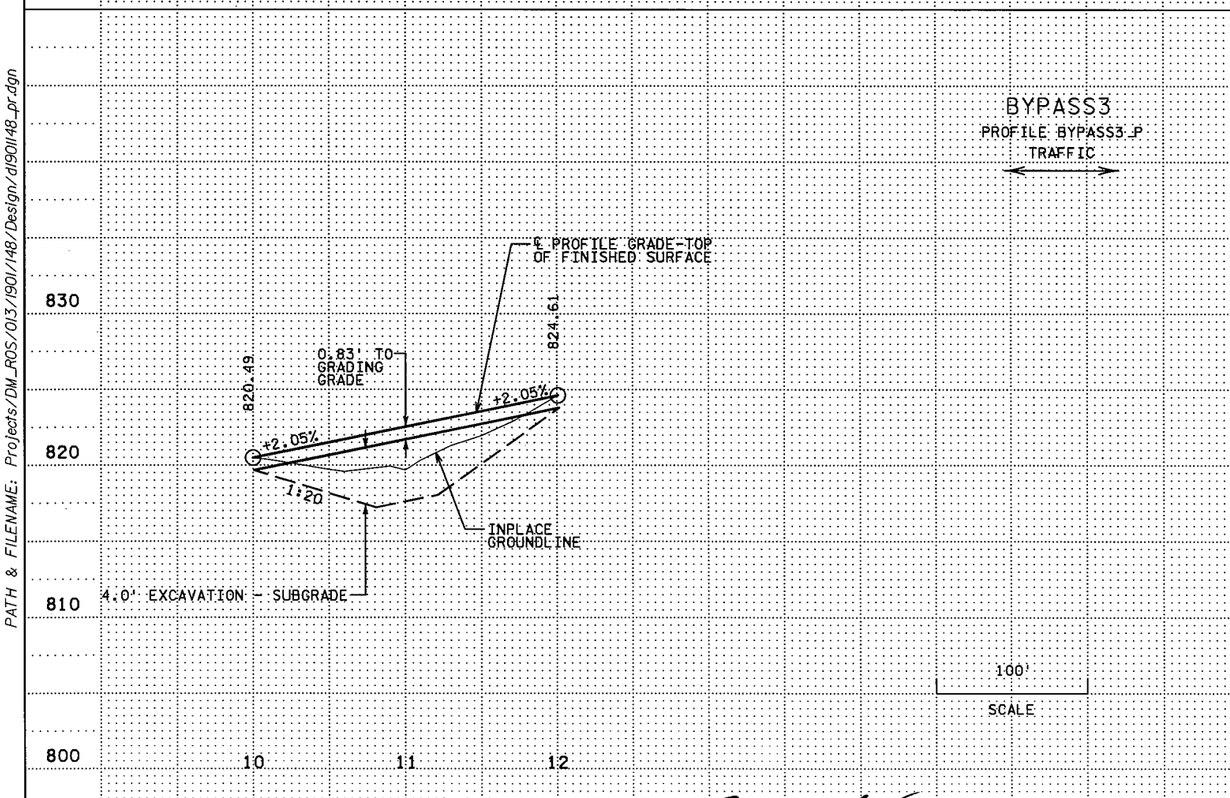

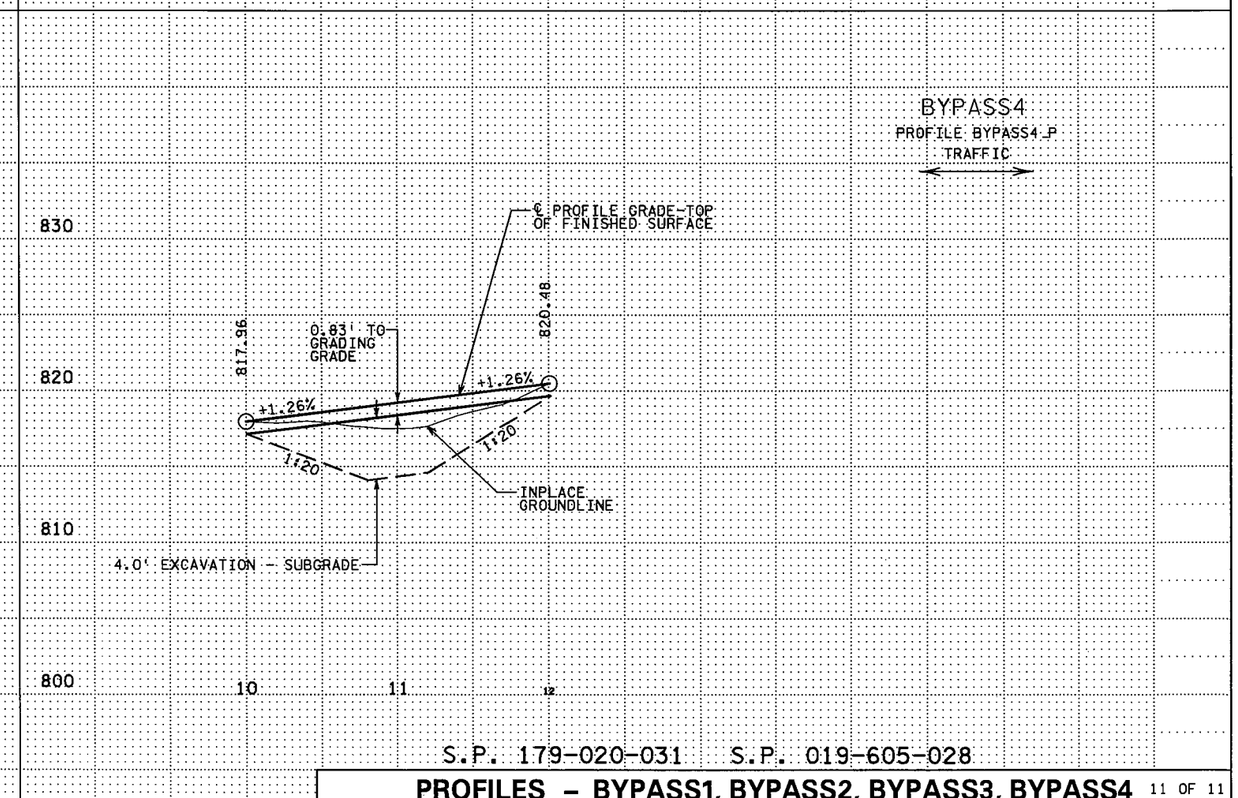

S.P. 179-020-031 S.P. 019-605-028

PROFILES - BYPASS1, BYPASS2, BYPASS3, BYPASS4 11 OF 11

DRAWN BY: GJ | CHECKED BY: HS | CERTIFIED BY _____ LICENSED PROFESSIONAL ENGINEER LIC. NO. 18520 DATE 6/18/12

STATE PROJ. NO. 1901-148 (T.H. 13) SHEET NO. 252 OF 442 SHEETS

PLOTTED/REVISED: 12-JUN-2012 14:00

DISTRICT #: METRO
IPLOT NAME: d1901148_pr
PATH & FILENAME: Projects/DM_ROS/013/1901/148/Design/d1901148_pr.dgn

GENERAL NOTES:

1. ALL DIMENSIONS SHOWN FOR ROADWAYS ON THE CONCRETE PAVING PLAN ARE ACTUAL ROADWAY WIDTHS.
2. REINFORCEMENT BARS FOR ALL LONGITUDINAL JOINTS ARE CONSIDERED INCIDENTAL.
3. PROPOSED JOINTS MAY BE CHANGED AS DIRECTED BY THE ENGINEER.
4. FOR ADDITIONAL DETAILS, SEE SHEET NO. 260.
5. TIE ALL CONCRETE CURB & GUTTER TO CONCRETE SHOULDERS WITH A L2KTH JOINT.
6. DOWEL BARS ARE NOT REQUIRED FOR THE T.H.13 OUTSIDE SHOULDERS.
7. CONSTRUCTION HEADER JOINTS SHALL BE CONSIDERED INCIDENTAL.
8. FOR SUPPLEMENTAL PAVEMENT REINFORCEMENT OVER PIPE SEWERS, SEE TABULATION SHEET NO. 30.

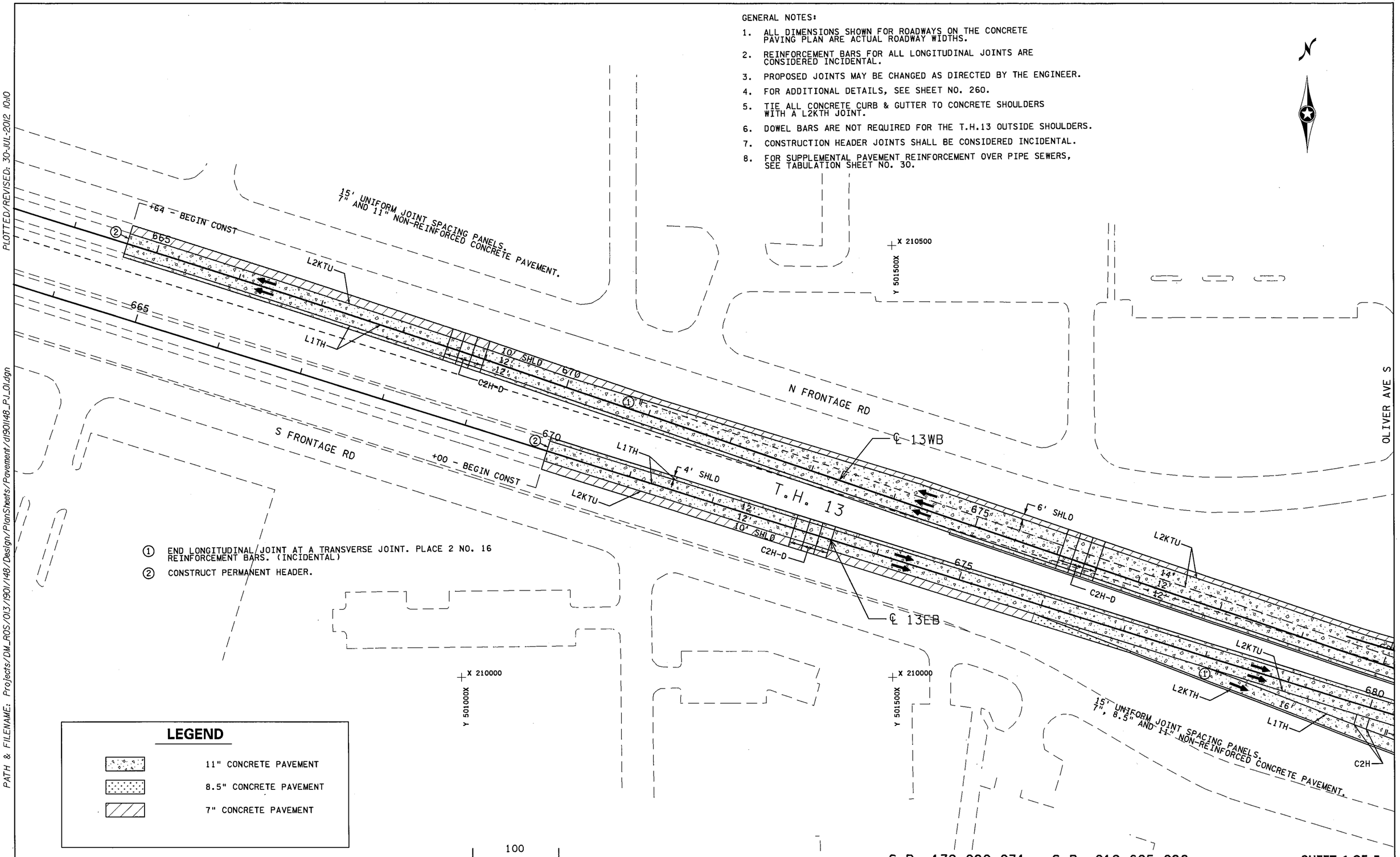

① END LONGITUDINAL JOINT AT A TRANSVERSE JOINT. PLACE 2 NO. 16 REINFORCEMENT BARS. (INCIDENTAL)

② CONSTRUCT PERMANENT HEADER.

S.P. 179-020-031 S.P. 019-605-028

SHEET 1 OF 5

CONCRETE PAVING PLANS

DRAWN BY: GLJ	CHECKED BY: HS	CERTIFIED BY LICENSED PROFESSIONAL ENGINEER	LIC. NO. 18520 DATE 7/30/12	STATE PROJ. NO. 1901-148 (T.H. 13) SHEET NO. 253 OF 442 SHEETS

DISTRICT #: METRO
IPLOT NAME: d1901148_PJ_01
PATH & FILENAME: Projects/DM_ROS/013/1901/148/Design/PlanSheets/Pavement/d1901148_PJ_01.dgn

PLOTTED/REVISED: 30-JUL-2012 10:10

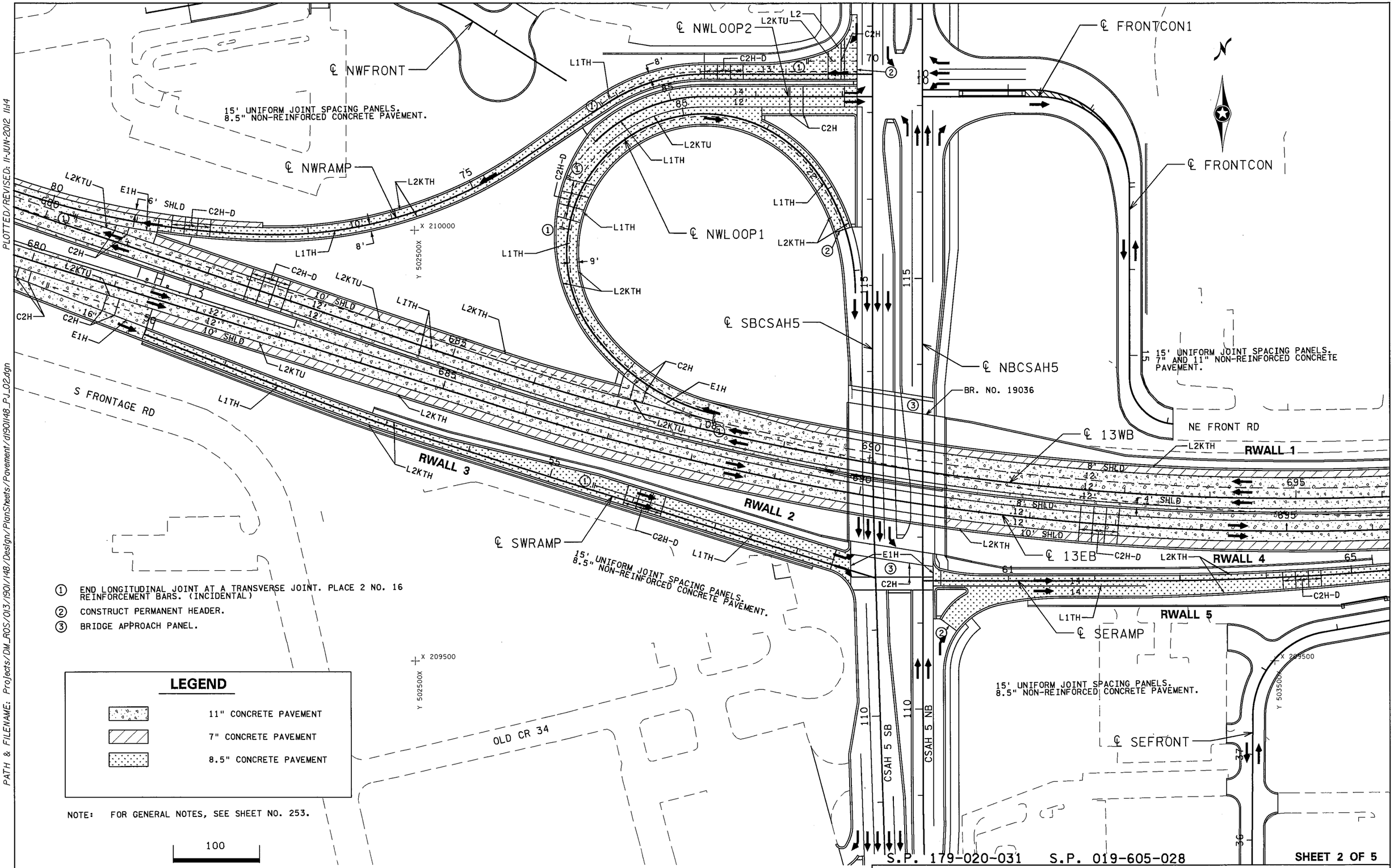

① END LONGITUDINAL JOINT AT A TRANSVERSE JOINT. PLACE 2 NO. 16 REINFORCEMENT BARS. (INCIDENTAL)

② CONSTRUCT PERMANENT HEADER.

③ BRIDGE APPROACH PANEL.

LEGEND

- 11" CONCRETE PAVEMENT
- 7" CONCRETE PAVEMENT
- 8.5" CONCRETE PAVEMENT

NOTE: FOR GENERAL NOTES, SEE SHEET NO. 253.

100

SCALE IN FEET

S.P. 179-020-031 S.P. 019-605-028

SHEET 2 OF 5

CONCRETE PAVING PLANS

DRAWN BY: GLJ	CHECKED BY: HS	CERTIFIED BY [signature] LICENSED PROFESSIONAL ENGINEER	LIC. NO. 18520 DATE 6/18/12	STATE PROJ. NO. 1901-148 (T.H. 13) SHEET NO. 254 OF 442 SHEETS

PLOTTED/REVISED: 11-JUN-2012 11:14

DISTRICT #: METRO
IPLOT NAME: d1901148_PJ_02
PATH & FILENAME: Projects/DM_ROS/013/1901/148/Design/PlanSheets/Pavement/d1901148_PJ_02.dgn

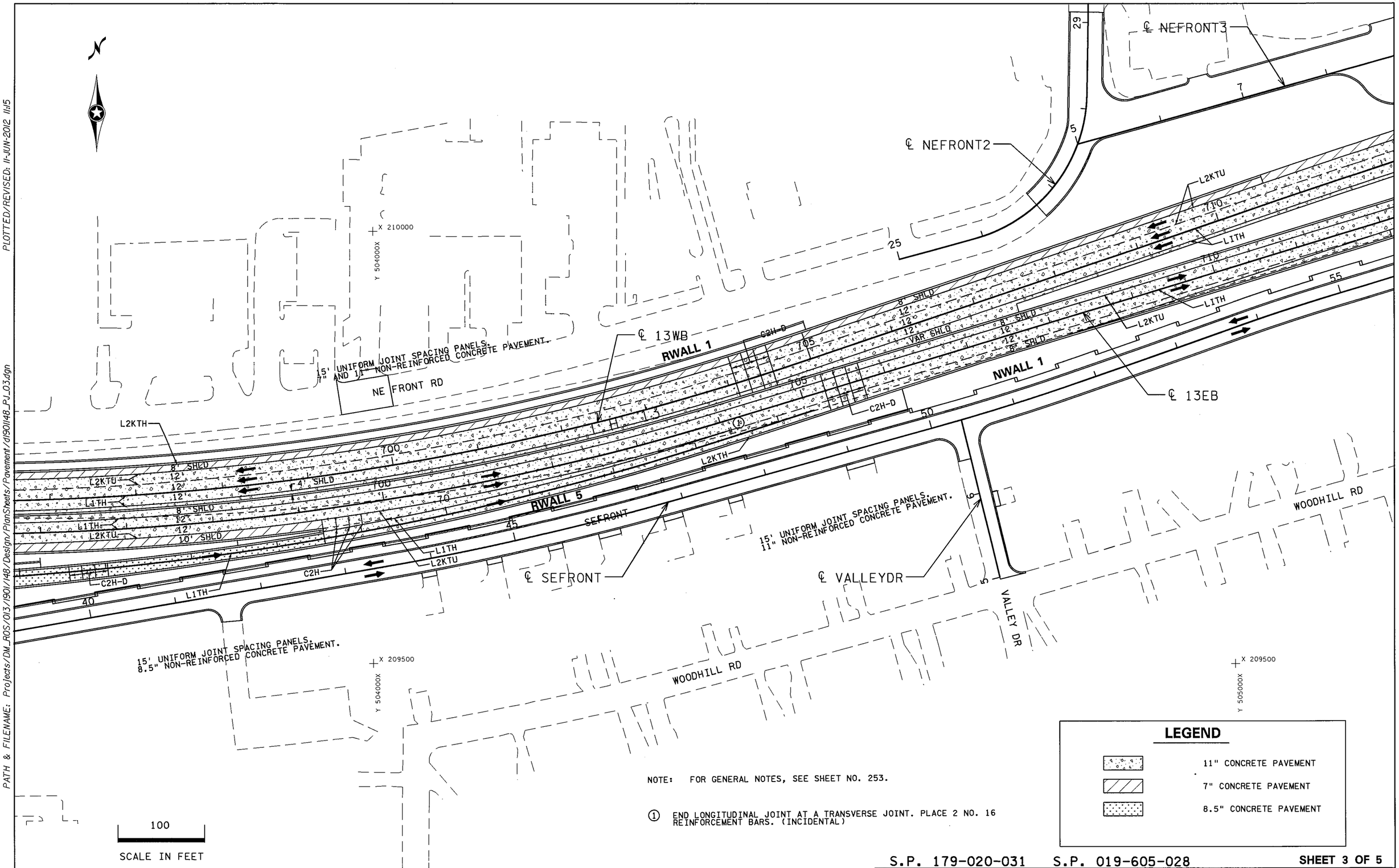

NOTE: FOR GENERAL NOTES, SEE SHEET NO. 253.

① END LONGITUDINAL JOINT AT A TRANSVERSE JOINT. PLACE 2 NO. 16 REINFORCEMENT BARS. (INCIDENTAL)

LEGEND

- 11" CONCRETE PAVEMENT
- 7" CONCRETE PAVEMENT
- 8.5" CONCRETE PAVEMENT

S.P. 179-020-031 S.P. 019-605-028 SHEET 3 OF 5

CONCRETE PAVING PLANS

DRAWN BY: GLJ	CHECKED BY: HS	CERTIFIED BY [signature] LICENSED PROFESSIONAL ENGINEER LIC. NO. 18520 DATE 6/18/12	STATE PROJ. NO. 1901-148 (T.H. 13) SHEET NO. 255 OF 442 SHEETS

PLOTTED/REVISED: 11-JUN-2012 11:15

DISTRICT #: METRO
IPLOT NAME: d1901148_PJ_03
PATH & FILENAME: Projects/DM_ROS/013/1901/148/Design/PlanSheets/Pavement/d1901148_PJ_03.dgn

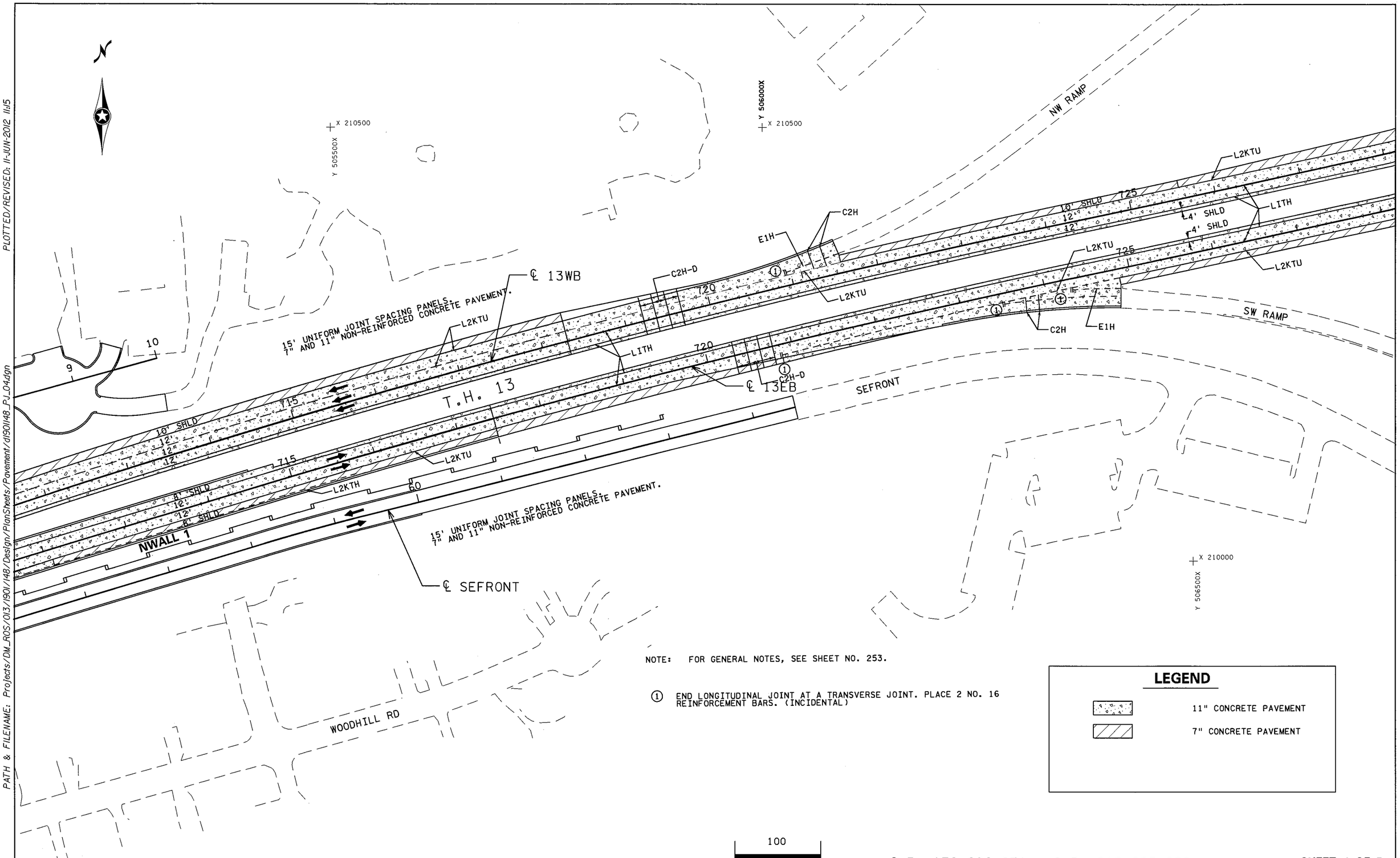

NOTE: FOR GENERAL NOTES, SEE SHEET NO. 253.

① END LONGITUDINAL JOINT AT A TRANSVERSE JOINT. PLACE 2 NO. 16 REINFORCEMENT BARS. (INCIDENTAL)

LEGEND

- 11" CONCRETE PAVEMENT
- 7" CONCRETE PAVEMENT

100

SCALE IN FEET

S.P. 179-020-031 S.P. 019-605-028

SHEET 4 OF 5

CONCRETE PAVING PLANS

DRAWN BY: GLJ	CHECKED BY: HS	CERTIFIED BY LICENSED PROFESSIONAL ENGINEER	LIC. NO. 18520 DATE 6/18/12	STATE PROJ. NO. 1901-148 (T.H. 13) SHEET NO. 256 OF 442 SHEETS

PLOTTED/REVISED: 11-JUN-2012 11:15

DISTRICT #: METRO
IPLOT NAME: d1901148_PJ_04
PATH & FILENAME: Projects/DM_ROS/013/1901/148/Design/PlanSheets/Pavement/d1901148_PJ_04.dgn

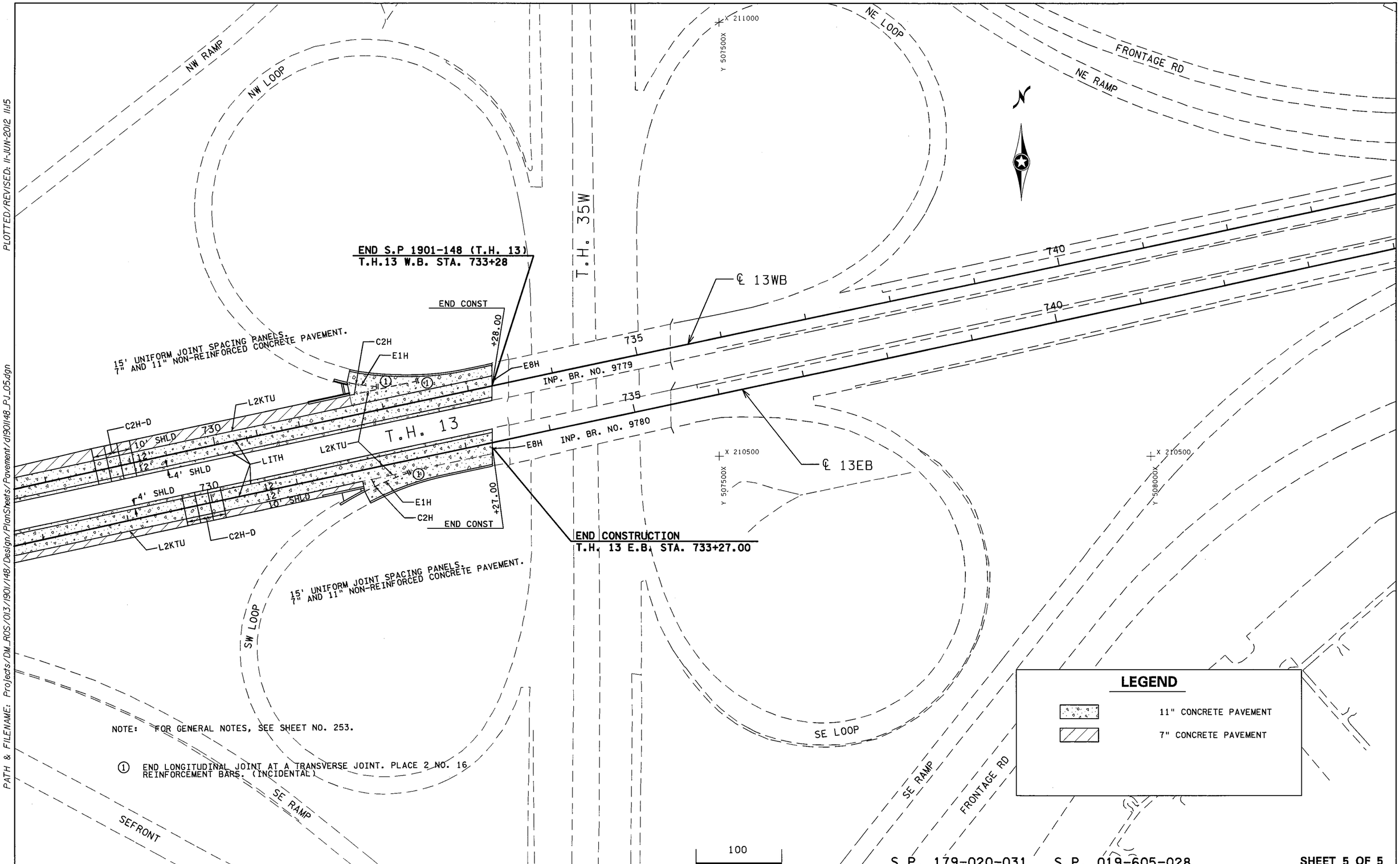

NOTE: FOR GENERAL NOTES, SEE SHEET NO. 253.

① END LONGITUDINAL JOINT AT A TRANSVERSE JOINT. PLACE 2 NO. 16 REINFORCEMENT BARS. (INCIDENTAL)

LEGEND

11" CONCRETE PAVEMENT

7" CONCRETE PAVEMENT

S.P. 179-020-031 S.P. 019-605-028

SHEET 5 OF 5

CONCRETE PAVING PLANS

DRAWN BY: GLJ	CHECKED BY: HS	CERTIFIED BY [signature] LICENSED PROFESSIONAL ENGINEER	LIC. NO. 18520 DATE 6/18/12	STATE PROJ. NO. 1901-148 (T.H. 13) SHEET NO. 257 OF 442 SHEETS

PLOTTED/REVISED: 11-JUN-2012 11:15

DISTRICT #: METRO
IPLOT NAME: d1901148_PJ_05
PATH & FILENAME: Projects/DM_ROS/013/1901/148/Design/PlanSheets/Pavement/d1901148_PJ_05.dgn

L2KTU PLACEMENT

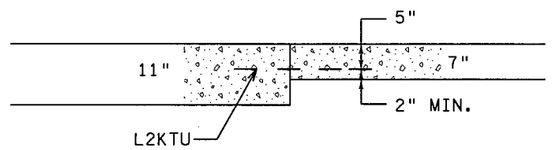

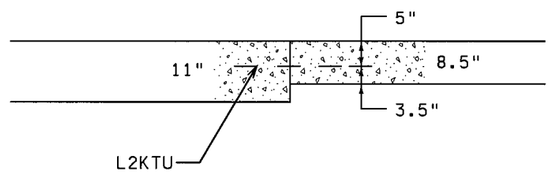

SUGGESTED T.H.13 CONCRETE PAVING SEQUENCING

STAGE 1

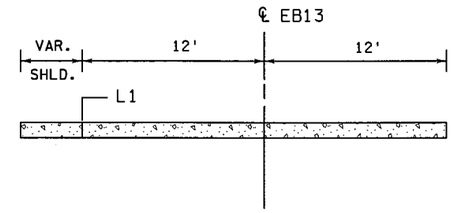

STAGE 2

COMPLETE SHOULDERS AND RAMPS.

STAGE 3

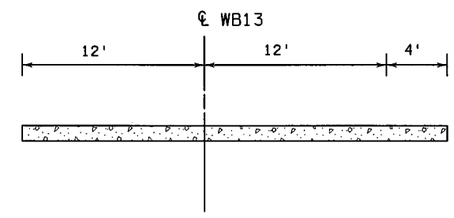

STAGE 4

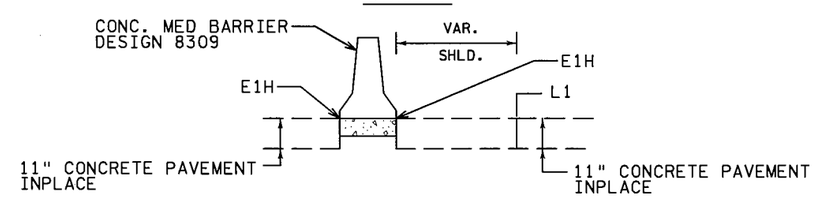

STAGE 5

COMPLETE SHOULDERS, AUX. LANE, RAMPS, AND LOOP.

S.P. 179-020-031 S.P. 019-605-028

SHEET 3 OF 8

CONCRETE PAVEMENT DETAIL

DRAWN BY: GLJ	CHECKED BY: HS	CERTIFIED BY LICENSED PROFESSIONAL ENGINEER LIC. NO. 18520 DATE 6/18/12	STATE PROJ. NO. 1901-148 (T.H. 13) SHEET NO. 260 OF 442 SHEETS

DISTRICT #: METRO
IPLOT NAME: d1901148_PJD_01
FILENAME: Projects/DM_ROS/013/1901/148/Design/PlanSheets/Pavement/d1901148_PJD_01.dgn
PLOTTED/REVISED: 11-JUN-2012 11:15

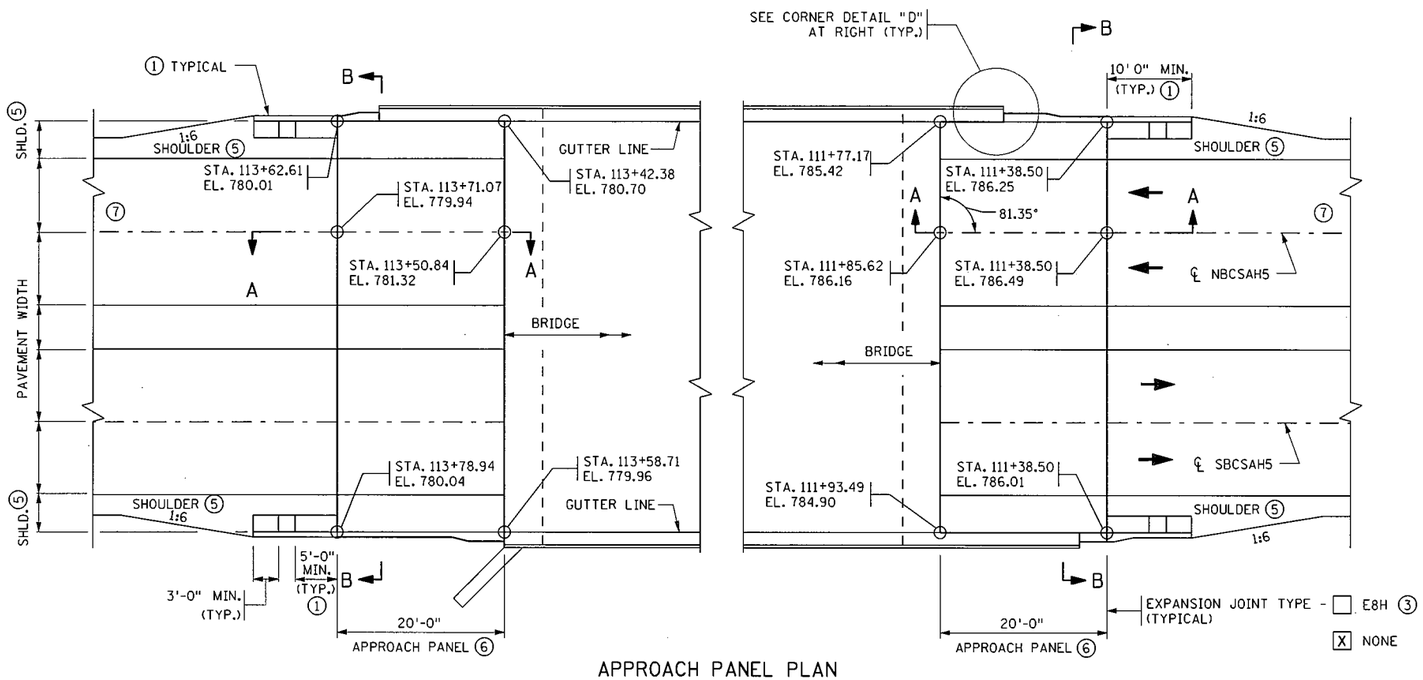

APPROACH PANEL PLAN

SQUARE TO 10° SKEW, BARRIER ON WINGWALL

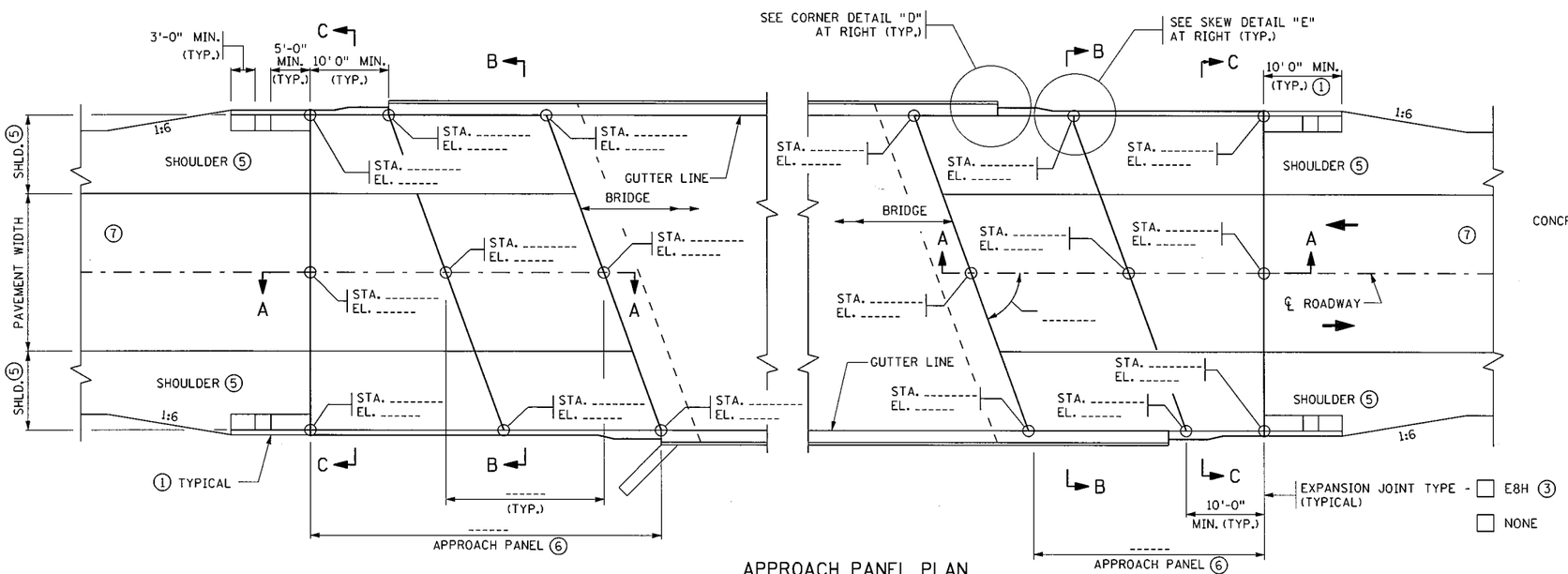

APPROACH PANEL PLAN

OVER 10° SKEW, BARRIER ON WINGWALL

NOTES:

① SEE STANDARD PLAN 5-297.231 FOR DRAINAGE DETAILS AND ADDITIONAL REQUIREMENTS.

② B4 CURB DESIGN SHOWN. SEE STANDARD PLATES FOR CURB DETAILS.

③ E8H QUANTITY SHALL BE PAID FOR SEPARATELY, MEASURED FROM BACK OF CURB TO BACK OF CURB.

④ WHEN SKEW IS OVER 45°, THE JOINT SHALL BE PERPENDICULAR TO GUTTER FOR 1' (TYP.).

⑤ SEE GRADING PLANS FOR PAVEMENT AND SHOULDER WIDTHS AND CONFIGURATION.

⑥ PANEL SIZE AND REQUIREMENTS FOR TRANSVERSE AND LONGITUDINAL JOINTS ARE SHOWN ON STANDARD PLANS 5-297.228 AND 5-297.229.

⑦ FOR CONCRETE PAVEMENT, SEE STANDARD PLAN 5-297.227 FOR LUG REQUIREMENTS.

GENERAL NOTES:

SECTION A-A IS SHOWN ON STANDARD PLAN 5-297.227. SECTIONS B-B AND C-C ARE SHOWN ON STANDARD 5-297.223 AND SHOW THE STATION AND ELEVATION AT END LOCATIONS ON THE APPROACH PANEL.

A CONCRETE SILL IS REQUIRED BENEATH EXPANSION JOINT TYPE E8H. EXTEND THE EXPANSION JOINT AND THE SILL ALONG THE FULL WIDTH OF THE TRAFFIC LANES, SHOULDERS AND CURB. ENSURE THAT SILL DOES NOT INTERFERE WITH GUARDRAIL POST PLACEMENT. CONCRETE SILL AND CURBING, IF REQUIRED, ARE INCLUDED IN THE APPROACH PANEL PAY ITEM.

AT THE END OF THE CONCRETE BARRIER, TRANSITION FACE OF 4-INCH CURB INTO PROFILE OF CONCRETE BARRIER. SEE CURB TRANSITION DETAILS ON STANDARD PLAN 5-297.227. IF THERE IS NO ROADWAY CURB AT THE END OF THE APPROACH PANEL, TRANSITION THE APPROACH PANEL CURB HEIGHT FROM 4 INCH TO 0 INCH IN THE LAST 3'-4" SECTION (1:10 OR FLATTER SLOPE).

GENERAL DRAINAGE DETAILS ARE SHOWN ON BRIDGE APPROACH PANEL DRAINAGE DETAILS, STANDARD PLAN 5-297.231. ADDITIONAL CATCH BASIN DETAILS ARE SHOWN ON DRAINAGE PLAN SHEETS.

CONCRETE MIX SHALL BE 3A42 FOR APPROACH PANEL AND SILL.

REFER TO MNDOT SPEC. 2406 FOR ADDITIONAL INFORMATION.

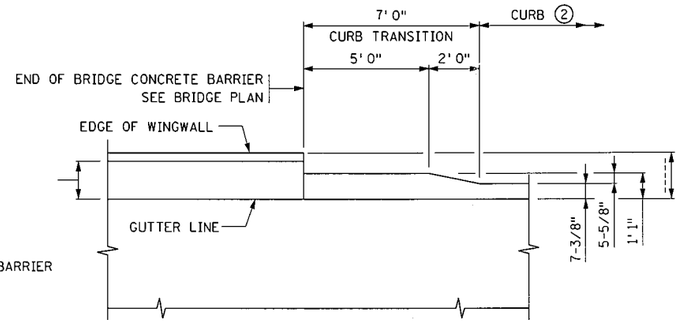

CORNER DETAIL "D"

(PLAN VIEW)

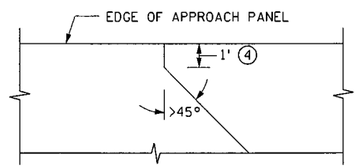

SKEW DETAIL "E"

(PLAN VIEW)

BRIDGE NO. 19036
SHEET 4 OF 8

S.P. 179-020-031 S.P. 019-605-028

STANDARD PLAN SHEET NO. 5-297.222	TITLE: BRIDGE APPROACH PANEL LAYOUT (CONCRETE BARRIER ON WINGWALL)
STANDARD APPROVED: MARCH 23, 2011	

CERTIFIED BY Todd R. Stevens 6/15/12
LICENSED PROFESSIONAL ENGINEER DATE
PRINTED NAME: TODD R. STEVENS LIC. NO. 21312

STATE PROJ. NO. 1901-148 (TH 13) SHEET NO. 261 OF 442 SHEETS

PLOTTED/REVISED: 11-JUN-2012 11:40
DISTRICT #: METRO
USER NAME: s222_l_spn
PATH & FILENAME: Projects/DM_ROS/013/1901/148/Design/PlanSheets/Standard Plans/s222_l_spndgn
FILE NAME: s222_l_spn

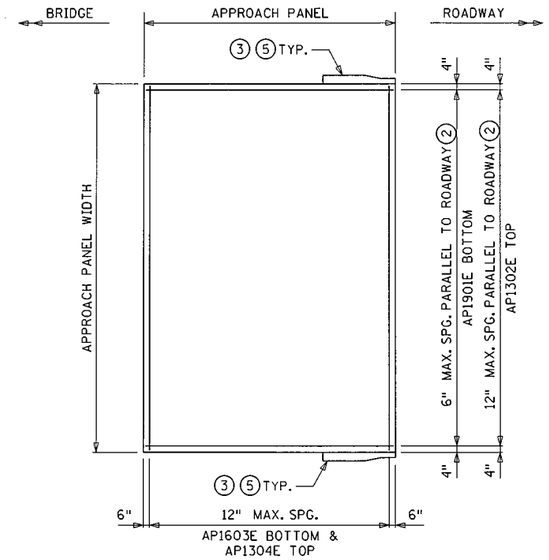

APPROACH PANEL REINFORCEMENT

SQUARE TO 10° SKEWS

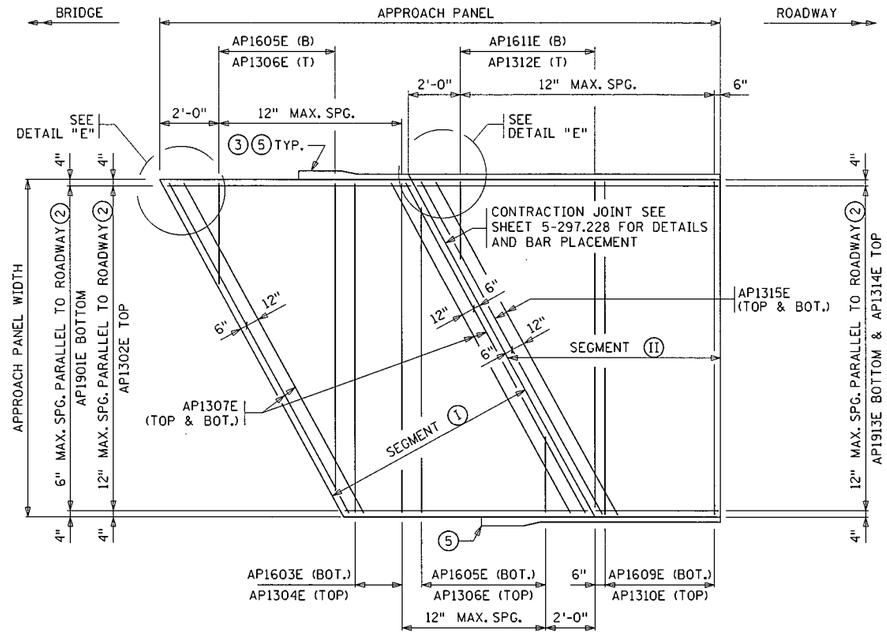

APPROACH PANEL REINFORCEMENT

OVER 10° SKEWS

ESTIMATED REINFORCEMENT QUANTITY FOR BRIDGE APPROACH PANELS

TYPE	LOCATION	ESTIMATIED WEIGHT
PANEL (SQ. TO 10°)	BRIDGE TO END OF APPROACH PANEL	48.5 LB./SQ. YD.
PANEL SEGMENT I (OVER 10°)	BRIDGE TO CONTRACTION JOINT	48.5 LB./SQ. YD.
PANEL SEGMENT II (OVER 10°)	CONTRACTION JOINT TO END OF APPROACH PANEL	35.0 LBS/SQ. YD.
CURB	7.0 FT. CURB TRANSITION	19.0 LBS/EACH
SILL	SILL (IF REQUIRED)	14.0 LBS/LIN FT.

NOTES:

TRANSVERSE BARS IN BOTH PANEL SEGMENTS ARE PERPENDICULAR TO ROADWAY CENTERLINE EXCEPT AP1307E ARE PARALLEL TO SKEW IN SEGMENT I AND AP1315E ARE PARRALLEL TO SKEW IN SEGMENT II.

LONGITUDINAL BARS IN BOTH PANEL SEGMENTS ARE PARALLEL TO ROADWAY CENTERLINE.

BILL OF REINFORCEMENT FOR BRIDGE APPROACH PANELS

CONTRACTOR IS REQUIRED TO COMPLETE THE BILL OF REINFORCEMENT TABLE AND PREPARE SHOP DRAWINGS AND SUBMIT THEM TO THE PROJECT ENGINEER AT LEAST 3 WEEKS BEFORE REBAR FABRICATION.

BAR	NO.	LENGTH	SHAPE	LOCATION
AP1901E	__	__'-__	———	BOTTOM LONGITUDINAL
AP1302E	__	__'-__	———	TOP LONGITUDINAL
AP1603E	__	__'-__	———	BOTTOM TRANSVERSE
AP1304E	__	__'-__	———	TOP TRANSVERSE
AP1605E	_ SER. OF __	__'-__ TO __'-__	———	BOTTOM TRANSVERSE
AP1306E	_ SER. OF __	__'-__ TO __'-__	———	TOP TRANSVERSE
AP1307E	__	__'-__	———	TOP & BOTTOM EDGE
AP1608E	__	8'-0	———	TOP CORNER - FAN
AP1609E	__	__'-__	———	BOTTOM TRANSVERSE
AP1310E	__	__'-__	———	TOP TRANSVERSE
AP1611E	_ SER. OF __	__'-__ TO __'-__	———	BOTTOM TRANSVERSE
AP1312E	_ SER. OF __	__'-__ TO __'-__	———	TOP TRANSVERSE
AP1913E	_ SER. OF __	__'-__ TO __'-__	———	BOTTOM LONGITUDINAL
AP1314E	_ SER. OF __	__'-__ TO __'-__	———	TOP LONGITUDINAL
AP1315E	__	__'-__	———	TOP & BOTTOM EDGE
AP1916E	__	5'-0	———	C2H-D JOINT

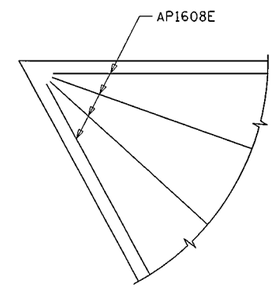

DETAIL "E"

FAN 4-AP1608E BARS AS SHOWN IN ACUTE CORNERS FOR SKEWS OVER 30°.

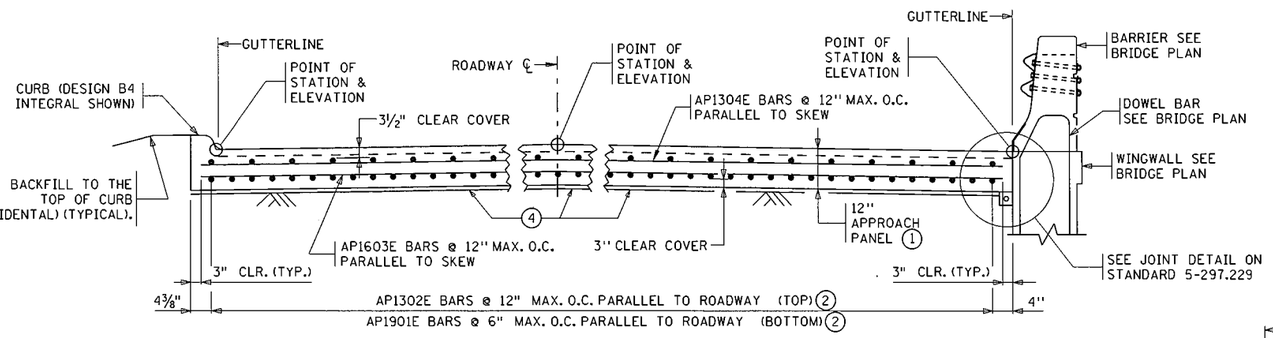

TRANSVERSE SECTION B-B

FROM STANDARD PLAN 5-297.222

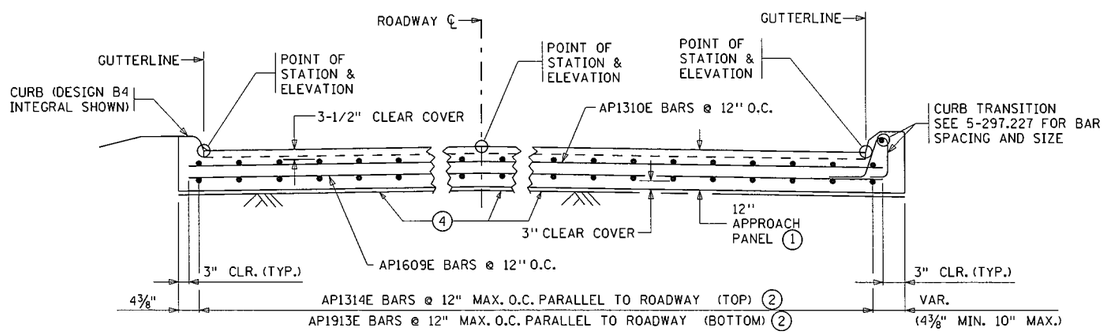

TRANSVERSE SECTION C-C

FROM STANDARD PLAN 5-297.222

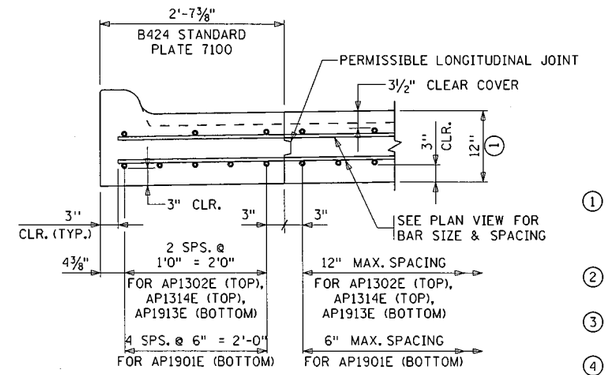

CURB DETAIL

(B424 CURB AND GUTTER SHOWN)

GENERAL NOTES:

AS PER MNDOT SPEC. 3301, USE EPOXY COATED GRADE 60 REINFORCEMENT BARS IN APPROACH PANEL, CONCRETE SILL AND CURB TRANSITION.

THE FIRST TWO DIGITS OF EACH BAR MARK INDICATE THE BAR NUMBER, WHICH APPROXIMATES THE NOMINAL DIAMETER OF THE BAR IN MILLIMETERS (mm). BARS MARKED WITH THE SUFFIX "E" SHALL BE EPOXY COATED IN ACCORDANCE WITH Mn/DOT SPEC. 3301.

FOR VARIABLE ROADWAY WIDTHS, VARY THE LAP LENGTH OF THE REINFORCEMENT.

MINIMUM REINFORCEMENT LAP LENGTHS ARE AS FOLLOWS: NO. 13 BAR = 1'-8", NO. 16 BAR = 2'-1", NO. 19 BAR = 2'-6".

ALL LAP SPLICES SHALL BE STAGGERED SUCH THAT NO MORE THAN 50% OF REBAR IS SPLICED AT THE SAME LOCATION.

1. APPROACH SLAB THICKNESS SHOWN INCLUDES 2-INCH CONCRETE WEARING COURSE THAT MAY BE REQUIRED. CHECK BRIDGE PLANS FOR CONCRETE WEARING COURSE. CONCRETE WEARING COURSE IS TO BE INCLUDED IN BRIDGE PLAN QUANTITIES.
2. SPACING ONLY FOR B4 INTEGRANT CURB. SEE CURB DETAIL FOR SPACING FOR USING B424 CURB AND GUTTER.
3. EXTEND REINFORCEMENT INTO CURB AS SHOWN IN TRANSVERSE SECTION B-B AND C-C.
4. IF THE APPROACH PANEL IS TIED TO THE BRIDGE ABUTMENT WITH REINFORCEMENT BARS, PLACE 12 MIL POLYETHYLENE SHEETING (OR 2 LAYERS OF 6 MIL) UNDER THE LIMITS OF THE APPROACH PANEL TO ALLOW THE PANEL TO MOVE LONGITUDINALLY ON THE GRADE. SHEETING IS INCLUDED IN THE APPROACH PANEL PAY ITEM.
5. SEE STANDARD PLAN 5-297.222 FOR CURB TRANSITION LOCATION.

S.P. 179-020-031 S.P. 019-605-028 SHEET 5 OF 8

STANDARD PLAN SHEET NO. 5-297.223	TITLE: BRIDGE APPROACH PANEL REINFORCEMENT DETAILS (CONCRETE BARRIER ON WINGWALL)
STANDARD APPROVED: DEC 20, 2011	

STATE PROJ. NO. 1901-148 (TH 13) SHEET NO. 262 OF 442 SHEETS

PLOTTED/REVISED: 11-JUN-2012 11:42
DISTRICT #: METRO
USER NAME: s223_l_spn
PATH & FILENAME: Projects/DM_ROS/013/1901/148/Design/PlanSheets/Standard Plans/s223_l_spn.dgn
FILE NAME: s223_l_spn

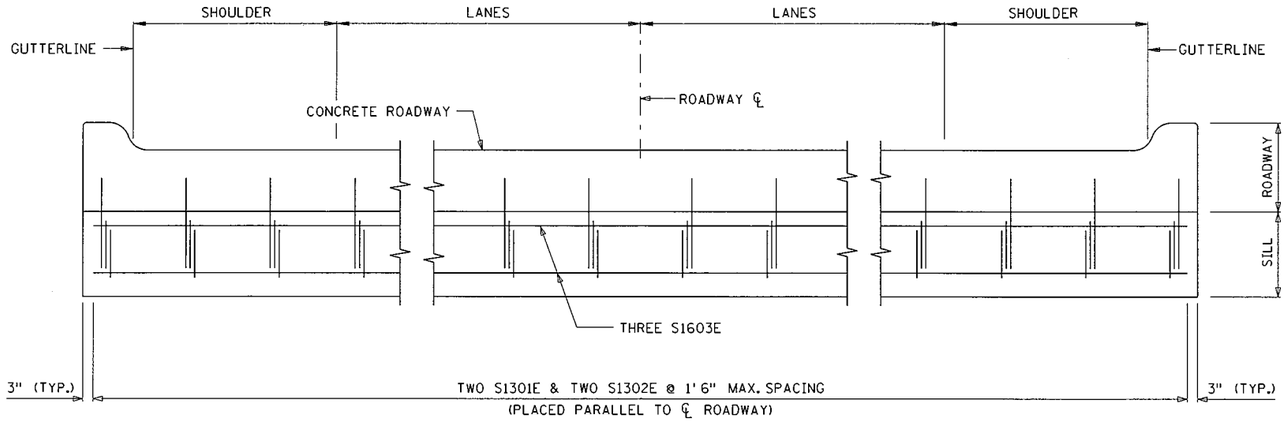

SILL ELEVATION
(REINFORCEMENT IN PAVEMENT NOT SHOWN)

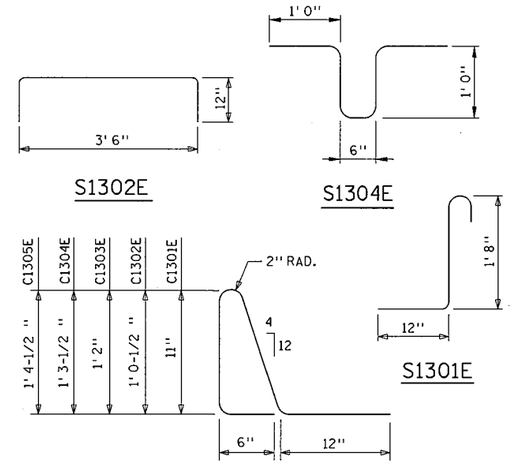

C1301E - C1305E

BILL OF REINFORCEMENT FOR CONCRETE SILL

CONTRACTOR IS REQUIRED TO COMPLETE THE BILL OF REINFORCEMENT TABLE AND PREPARE SHOP DRAWINGS AND SUBMIT THEM TO THE PROJECT ENGINEER AT LEAST 3 WEEKS BEFORE REBAR FABRICATION.

	BAR	NO.	LENGTH	SHAPE	LOCATION
	S1301E		3' 2"		SILL VERTICAL
	S1302E		5' 6"		SILL TIE
*	S1603E		' - "		SILL HORIZONTAL
	S1304E		4' 6"		KEY TIE
*	S1305E		' "		KEY HORIZONTAL

* PROVIDE 2'1" MINIMUM LAP IF TWO BARS REQUIRED

BILL OF REINFORCEMENT FOR CURB TRANSITION

CONTRACTOR IS REQUIRED TO COMPLETE THE BILL OF REINFORCEMENT TABLE AND PREPARE SHOP DRAWINGS AND SUBMIT THEM TO THE PROJECT ENGINEER AT LEAST 3 WEEKS BEFORE REBAR FABRICATION.

BAR	NO.	LENGTH	SHAPE	LOCATION
C1301E		3' 6"		CURB VERTICAL
C1302E		3' 9"		CURB VERTICAL
C1303E		4' 0"		CURB VERTICAL
C1304E		4' 3"		CURB VERTICAL
C1305E		4' 5"		CURB VERTICAL
C1306E		6' 9"		CURB LONGITUDINAL

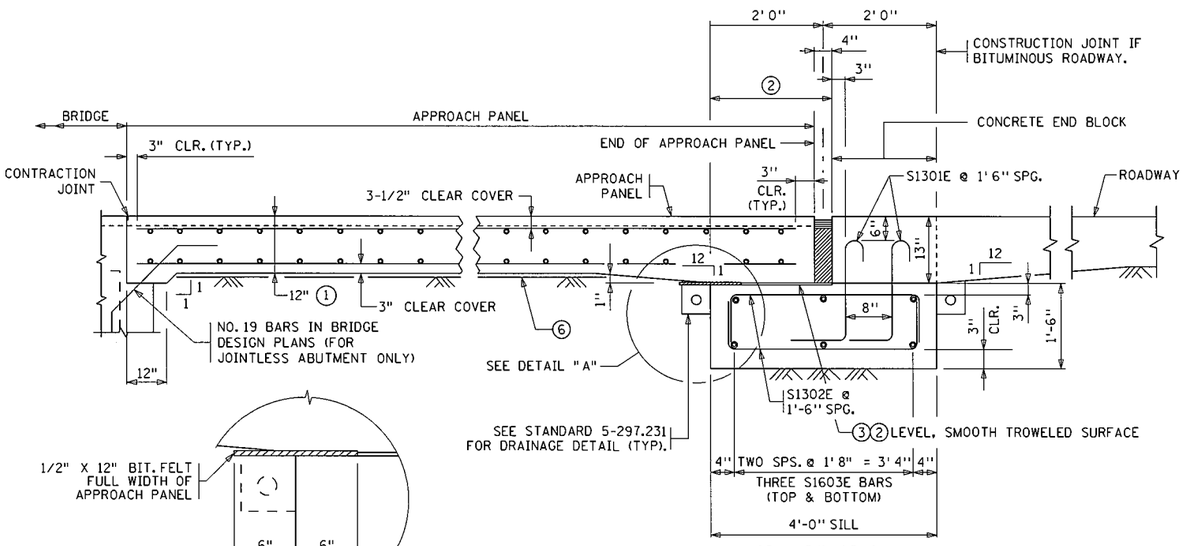

DETAIL "A"

LONGITUDINAL SECTION A-A
FROM SHEET 5-297.222 & SHEET 5-297.224

SILL DETAILS
(CONCRETE MAINLINE SHOWN)
(BITUMINOUS MAINLINE SIMILAR)

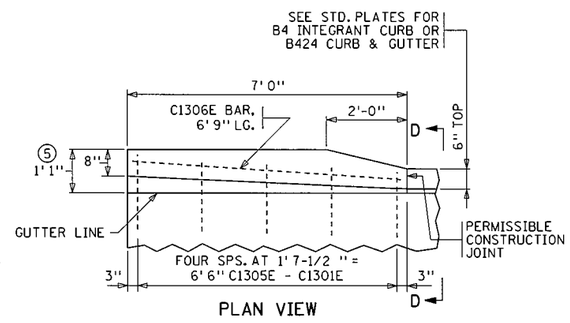

PLAN VIEW

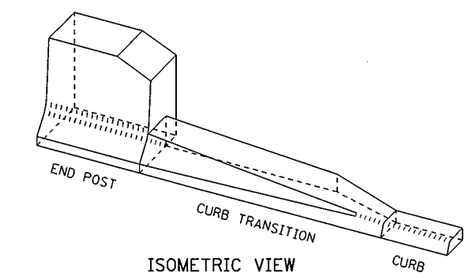

ISOMETRIC VIEW

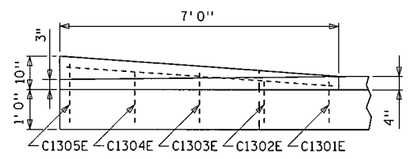

INSIDE ELEVATION
(FOR F - SHAPE SAFETY RAIL)

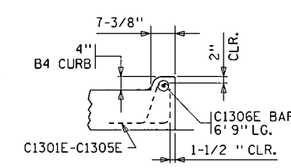

SECTION D-D

CURB TRANSITION DETAILS
F-SHAPE SAFETY BARRIER TO B4 CURB WITH W-BEAM GUARDRAIL BARRIER

NOTES:

AS PER MNDOT 3301, USE EPOXY COATED GRADE 60 REINFORCEMENT BARS.

ENSURE THAT SILL DOES NOT INTERFERE WITH GUARDRAIL POST PLACEMENT.

(1) APPROACH SLAB THICKNESS SHOWN INCLUDES 2-INCH CONCRETE WEARING COURSE THAT MAY BE REQUIRED. CHECK BRIDGE PLANS FOR CONCRETE WEARING COURSE. CONCRETE WEARING COURSE IS INCLUDED IN BRIDGE PLAN QUANTITIES.

(2) PLACE PLASTIC SHEETING (MNDOT 3756) AS APPROVED BY THE ENGINEER TO BREAK BOND. COVER AREA SHOWN IN DETAIL. (SHEETING IS INCLUDED IN THE APPROACH PANEL PAY ITEM).

(3) REQUIRED CONSTRUCTION JOINT.

(4) SEE STANDARD PLANS 5-297.222 & 5-297.224 FOR TYPE OF EXPANSION JOINT. DETAILS OF EXPANSION JOINT TYPE E8H ARE SHOWN ON STANDARD PLAN 5-297.229.

(5) FROM BACK SIDE OF CURB TRANSITION TO GUTTERLINE.

(6) IF THE APPROACH PANEL IS TIED TO THE BRIDGE ABUTMENT WITH REINFORCEMENT BARS, PLACE 12 MIL POLYETHYLENE SHEETING (OR 2 LAYERS OF 6 MIL) UNDER THE LIMITS OF THE APPROACH PANEL TO ALLOW THE PANEL TO MOVE LONGITUDINALLY ON THE GRADE. SHEETING IS INCLUDED IN THE APPROACH PANEL PAY ITEM.

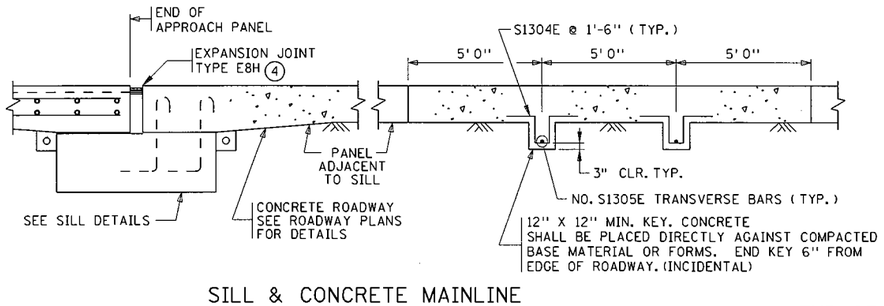

SILL & CONCRETE MAINLINE

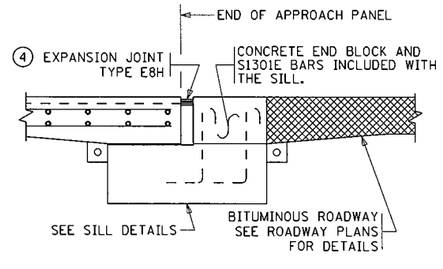

SILL & BITUMINOUS MAINLINE

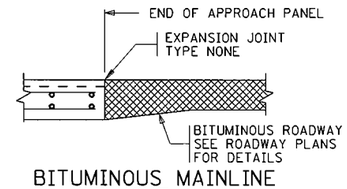

BITUMINOUS MAINLINE WITHOUT SILL
(NON TRUNK HIGHWAY USE ONLY)

END OF APPROACH PANEL

S.P. 179-020-031 S.P. 019-605-028

SHEET 6 OF 8

STANDARD PLAN SHEET NO. 5-297.227	TITLE: BRIDGE APPROACH PANEL MISCELLANEOUS DETAILS
STANDARD APPROVED: DEC 20, 2011	

STATE PROJ. NO. 1901-148 (TH 13) SHEET NO. 263 OF 442 SHEETS

PLOTTED/REVISED: 11-JUN-2012 11:44
DISTRICT #: METRO
USER NAME: s227_J_spn
PATH & FILENAME: Projects/DM_ROS/013/1901/148/Design/PlanSheets/Standard Plans/s227_J_spn.dgn
FILE NAME: s227_J_spn

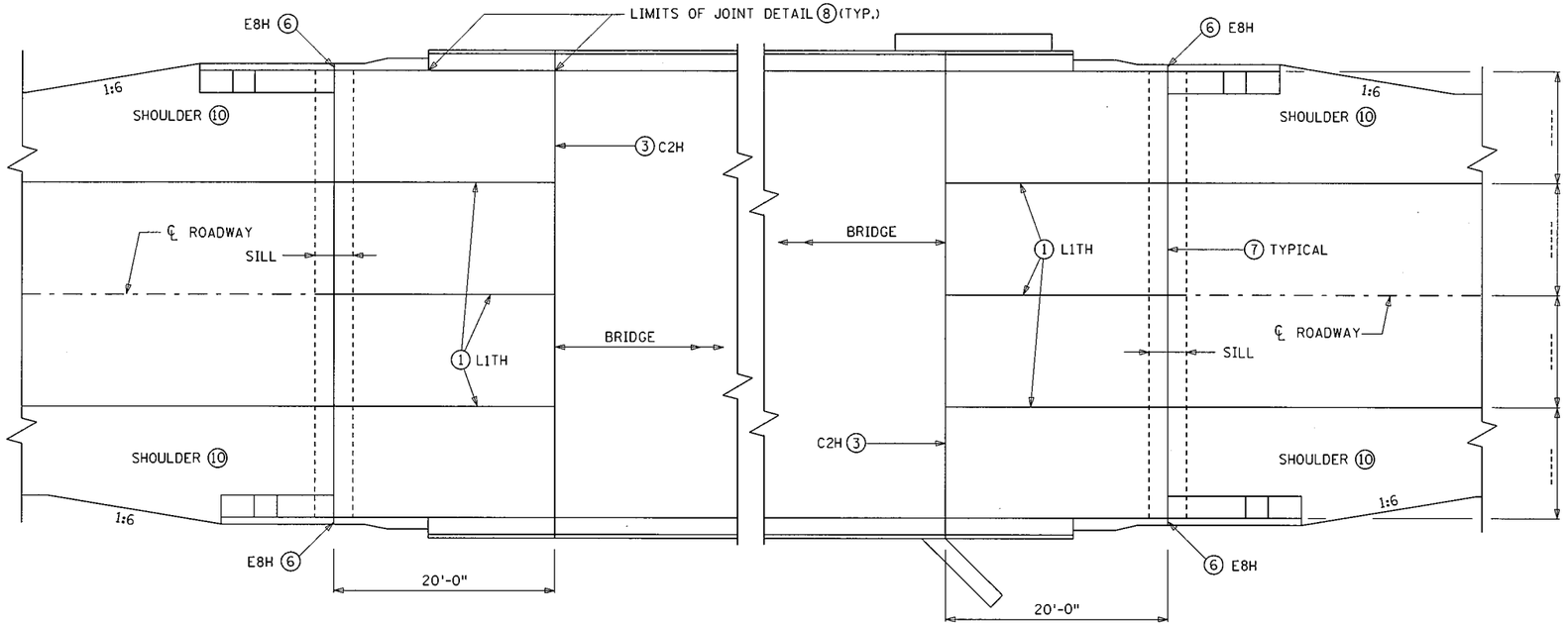

APPROACH PANELS - SQUARE TO 10° SKEWS ⑤

APPROACH PANEL JOINT LAYOUT NOTES:

1. ① L1TH LONGITUDINAL JOINT. SEE STANDARD PLAN 5-297.229 FOR REINFORCEMENT LAP LENGTH REQUIREMENTS FOR STAGED CONSTRUCTION.
2. ② PERMISSIBLE CONSTRUCTION JOINT. USE JOINT TYPE C2H-D WITH AP1916E BARS AT 12-INCH SPACING AT MID DEPTH OF THE SLAB, PARALLEL TO THE CENTERLINE OF THE ROADWAY. AP1916E BARS ARE 5'-0" LONG. PLACE THE BAR WITH 2'-0" ON ONE SIDE OF THE JOINT AND 3'-0" ON THE OPPOSITE SIDE OF THE JOINT. ALTERNATE THE 2'-0" AND 3'-0" DIMENSIONS AS SHOWN ON THE PLAN. THE C2H-D JOINT AND AP1916E BARS ARE REQUIRED ON ALL PANELS WITH A SKEW OVER 10 DEGREES.
3. ③ C2H CONTRACTION JOINT.
4. ④ MAXIMUM PANEL LENGTH OF 20'-0" FOR UP TO 40° SKEWS, 15'-0" FOR SKEWS OVER 40°.
5. ⑤ ALL JOINTS SHALL BE SAWCUT. SAWCUTS SHALL BE MADE WHILE THE CONCRETE IS STILL GREEN. WHEN A CONCRETE WEARING COURSE IS SPECIFIED, THE JOINTS SHALL BE SAWN THROUGH BOTH THE WEARING COURSE AND THE UNDERLYING APPROACH SLAB IN A SINGLE OPERATION.
6. ⑥ E8H JOINT REQUIRED IN CURB ADJACENT TO E8H JOINT. E8H QUANTITY SHALL BE PAID FOR SEPARATELY, MEASURED FROM BACK OF CURB TO BACK OF CURB.
7. ⑦ SEE STANDARD PLANS 5-297.222 OR 5-297.224 FOR TYPE OF EXPANSION JOINT.
8. ⑧ SEE STANDARD PLANS 5-297.229 OR 5-297.231 FOR JOINT DETAIL FOR CONCRETE BARRIER ON WINGWALL.
9. ⑨ WHEN SKEW IS OVER 45°, THE JOINT SHALL BE PERPENDICULAR TO GUTTER FOR 1' (TYP).
10. ⑩ SEE GRADING PLAN FOR PAVEMENT AND SHOULDER WIDTHS AND CONFIGURATION.

NOTE:
FOR APPROACH PANEL SIZE AND ADDITIONAL JOINT DETAILS SEE SHEET NO. 254.

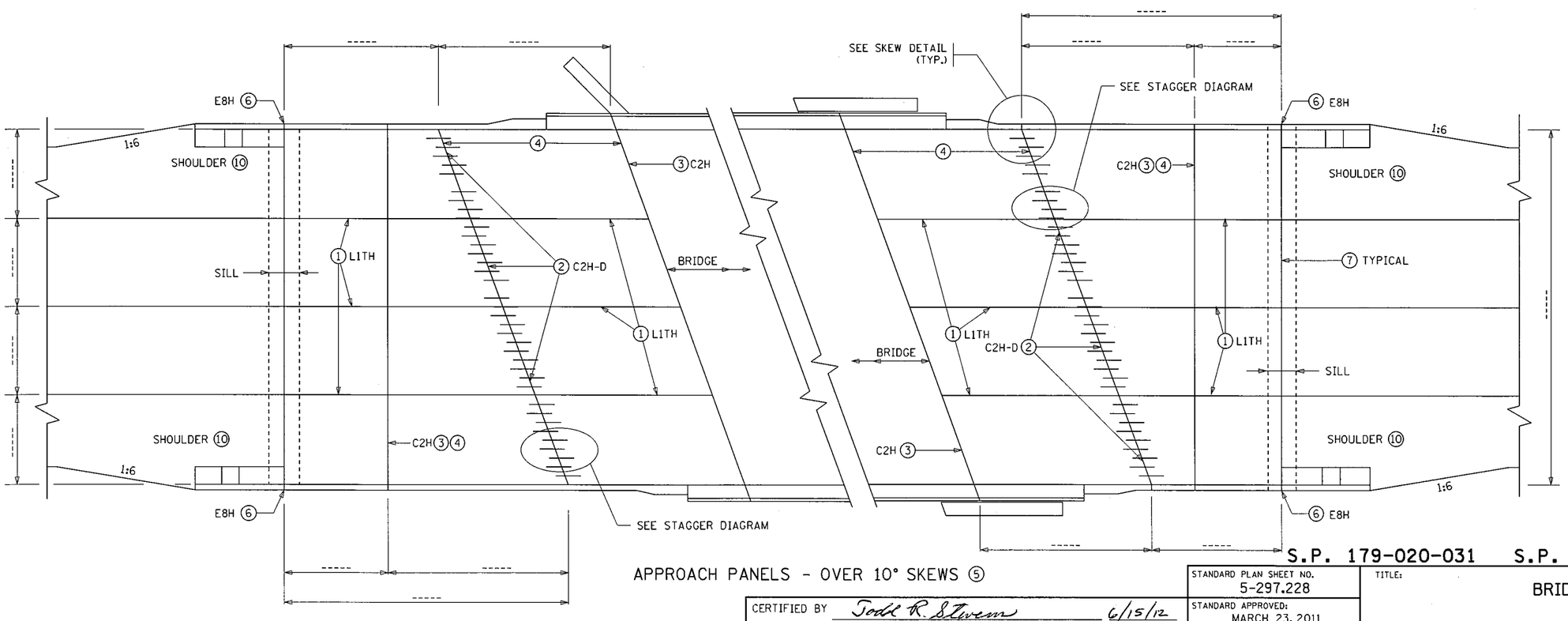

APPROACH PANELS - OVER 10° SKEWS ⑤

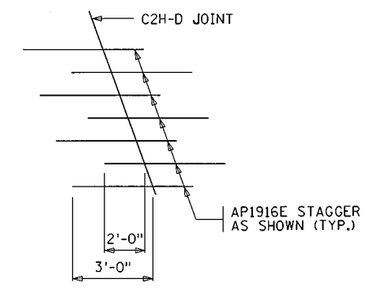

STAGGER DIAGRAM

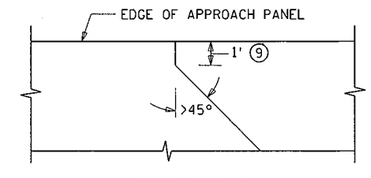

SKEW DETAIL
(PLAN VIEW)

BRIDGE NO. 19036
SHEET 7 OF 8

S.P. 179-020-031 S.P. 019-605-028

CERTIFIED BY Todd R. Stevens 6/15/12 (LICENSED PROFESSIONAL ENGINEER, DATE)	STANDARD PLAN SHEET NO. 5-297.228
PRINTED NAME: TODD R. STEVENS LIC. NO. 21312	STANDARD APPROVED: MARCH 23, 2011
	TITLE: BRIDGE APPROACH PANEL JOINT LAYOUT
	STATE PROJ. NO. 1901-148 (TH 13) SHEET NO. 264 OF 442 SHEETS

PLOTTED/REVISED: 11-JUN-2012 11:46
DISTRICT *: METRO
USER NAME: s228_l_spn
PATH & FILENAME: Projects/DM_ROS/013/1901/148/Design/PlanSheets/Standard Plans/s228_l_spn.dgn
FILE NAME: s228_l_spn

EXPANSION JOINTS

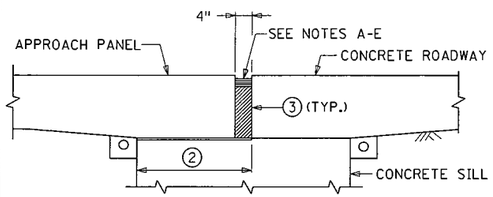

E8H JOINT DETAIL AT PAVEMENT

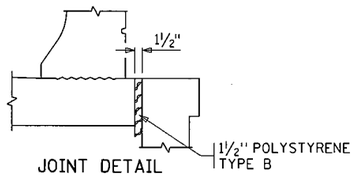

JOINT DETAIL
(CONCRETE BARRIER ON APPROACH PANEL)

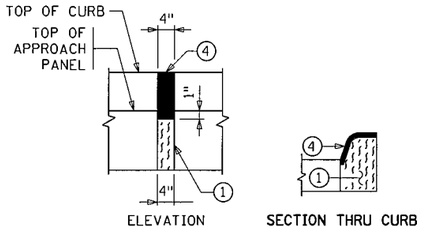

ELEVATION SECTION THRU CURB

E8H JOINT AT CURB

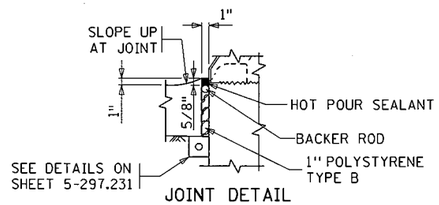

JOINT DETAIL
(CONCRETE BARRIER ON WINGWALL)

EXPANSION JOINT NOTES:

1. PREFORMED JOINT FILLER MATERIAL, SPEC. 3702.
2. PLACE PLASTIC SHEETING SPEC. 3756 AS APPROVED BY THE ENGINEER TO BREAK BOND. COVER AREA SHOWN IN DETAIL. SEE SILL DETAILS ON STANDARD PLAN 5-297.227.
3. THE JOINT FACES SHALL BE CLEANED AND DRIED BY SANDBLASTING AND AIR BLASTING PRIOR TO SEALING THE JOINT.
4. HOT POUR JOINT SEALER SPEC. 3725. TOP OF SEALER FLUSH TO 1/8 INCH BELOW TOP OF PAVEMENT SURFACE. MAKE TOP OF SEALER FOR CURB SECTION E8H JOINTS FLUSH WITH SURFACE (+ 1/8 INCH OR - 1/8 INCH).

E8H PRESSURE RELIEF JOINT MATERIAL INSTALLATION INSTRUCTIONS:

SEE MNDOT APPROVED/QUALIFIED PRODUCTS LIST.

FURNISH AND INSTALL JOINT MATERIAL IN ACCORDANCE WITH THE MANUFACTURER'S RECOMMENDATIONS AND THE FOLLOWING:

(A) EXPANSION JOINT FILLER MATERIALS USED FOR A 4 INCH PRESSURE RELIEF JOINT CONSISTS OF A PREFORMED FOAM PRODUCT HAVING MINIMUM DIMENSIONS OF 4.5 INCHES IN WIDTH (MAY BE LAMINATED) AND 8 INCHES IN DEPTH, AND A MINIMUM LENGTH OF 10 FEET. WHEN THE CONCRETE DEPTH IS GREATER THAN THE DEPTH OF THE PRESSURE RELIEF MATERIAL, FILL THE VOID BELOW THE MATERIAL WITH POLYSTYRENE. FURNISH AND INSTALL THE JOINT MATERIAL UNDER COMPRESSION WITH A LUBRICANT ADHESIVE APPLIED TO THE CONCRETE CONTACT SURFACES.

(B) SAW OR FORM THE JOINTS 4 INCHES WIDE BY THE FULL-DEPTH OF THE PANEL. INSPECT TO ASSURE THAT THE INSIDE WALLS OF THE JOINT HAVE BEEN SANDBLASTED, ARE DRY, SMOOTH AND FREE OF DEBRIS AND LOOSE PARTICLES. APPLY TAPE TO THE TOP 1 INCH OF THE INSIDE WALLS TO PREVENT THE LUBRICANT ADHESIVE FROM CONTAMINATING THE CONCRETE BONDING SURFACES OF THE SUBSEQUENTLY PLACED HOT POUR JOINT SEALER.

(C) PAINT THE INSIDE WALLS OF THE JOINT WITH LUBRICANT ADHESIVE AT THE RATE OF 1 GALLON PER 50 LINEAL FEET OF JOINT.

(D) PINCH THE BOTTOM OF THE MATERIAL TOGETHER AND PUSH IT DOWN INTO THE JOINT. WALK THE MATERIAL DOWN INTO THE JOINT; USE A SLEDGEHAMMER AND A 2 X 4 IF NECESSARY. APPLY LUBRICANT ADHESIVE TO THE ENDS OF THE PREFORMED FOAM MATERIAL WHEN BUTTING TWO PIECES TOGETHER.

(E) FURNISH AND INSTALL THE FOAM RELIEF JOINT MATERIAL TO A DEPTH OF APPROXIMATELY 7/8 INCH BELOW THE FINISHED CONCRETE SURFACE. AFTER INSTALLATION, REMOVE THE TAPE AND FILL THE VOID ON TOP OF THE FOAM MATERIAL WITH APPROXIMATELY 1/2 INCH OF HOT POUR JOINT SEALER (MNDOT 3723 OR 3725) TO A LEVEL OF 3/8 INCH +/- 1/4 INCH BELOW THE FINISHED CONCRETE SURFACE. THE HOT POUR JOINT SEALER SHOULD ONLY SLIGHTLY MELT INTO THE FOAM JOINT MATERIAL (TO PREVENT EXCESSIVE MELTING OF THE JOINT MATERIAL, PLACE THE HOT POUR SEALER AT THE LOWER END OF THE TEMPERATURE SPECIFICATION). CHECK FOR CORRECT TEMPERATURE BY PLACING HOT POUR SEALER ON A SAMPLE OF WASTE FOAM MATERIAL.

JOINT DETAILS

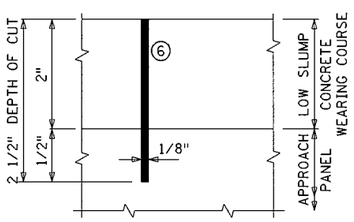

C2H & L1TH WITH CONCRETE WEARING COURSE 6
(SAWED & SEALED PER SPEC. 3725)

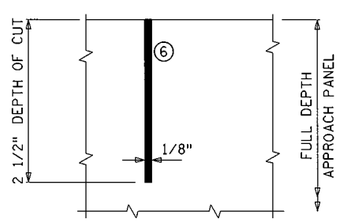

C2H & L1TH WITHOUT CONCRETE WEARING COURSE 6
(SAWED & SEALED PER SPEC. 3725)

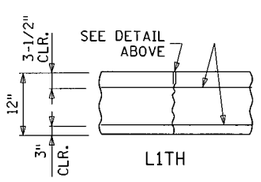

L1TH

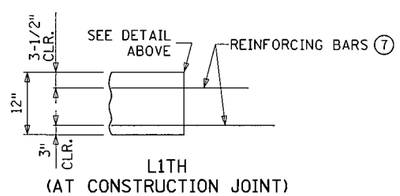

L1TH
(AT CONSTRUCTION JOINT)

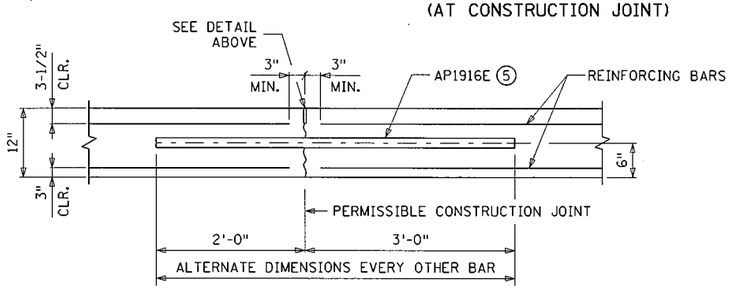

SECTION AT C2H-D JOINT 5

JOINT NOTES:

5. PERMISSIBLE CONSTRUCTION JOINT. AP1916E BARS AT 12-INCH SPACING AT MID DEPTH OF SLAB, PARALLEL TO THE CENTERLINE OF THE ROADWAY. AP1916E BARS ARE 5'-0" LONG. PLACE THE BAR WITH 2'-0" ON ONE SIDE OF THE JOINT AND 3'-0" ON THE OPPOSITE SIDE OF THE JOINT. ALTERNATE THE 2'-0" AND 3'-0" DIMENSION AS SHOWN ON THE PLAN.
6. CLEAN AND DRY FULLY CURED JOINT FACES BY SANDBLASTING PRIOR TO SEALING THE JOINT.
7. WHEN CONSTRUCTING A L1TH JOINT UNDER STAGED CONSTRUCTION, EXTEND NO. 13 BARS 1'-8" AND NO. 16 BARS 2'-1" PAST THE EDGE OF THE FIRST CONCRETE POUR. CONSTRUCT L1TH JOINT ACCORDING TO DETAIL SHOWN AFTER ADJACENT POUR IS COMPLETE.

SIDEWALK COVER PLATE

GENERAL NOTES:

GALVANIZE STRUCTURAL STEEL AFTER FABRICATION PER Mn/DOT SPEC. 3394
GALVANIZE FASTENERS PER Mn/DOT SPEC.3392.

STRUCTURAL STEEL SHALL COMPLY WITH Mn/DOT SPEC. 3306 OR Mn/DOT SPEC. 3309.

SHOP DRAWING SUBMITTALS REQUIRED PER Mn/DOT SPEC. 2471.

CAP SCREWS SHALL BE COUNTERSUNK 1/16" BELOW TOP OF PLATE.

FURNISHING AND INSTALLING SIDEWALK COVER PLATE IS INCIDENTAL.

1 USE LARGEST SINGLE PIECE POSSIBLE. USE OF SMALL PIECES OR SCRAPS SECURED TOGETHER IS PROHIBITED.

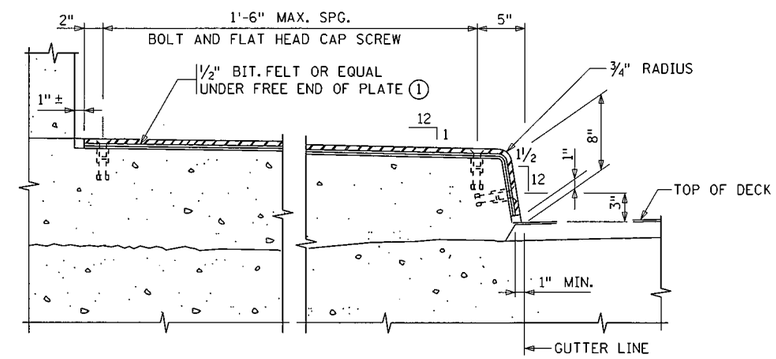

SECTION THROUGH SIDEWALK

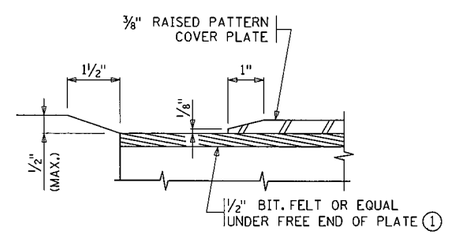

DETAIL "A"

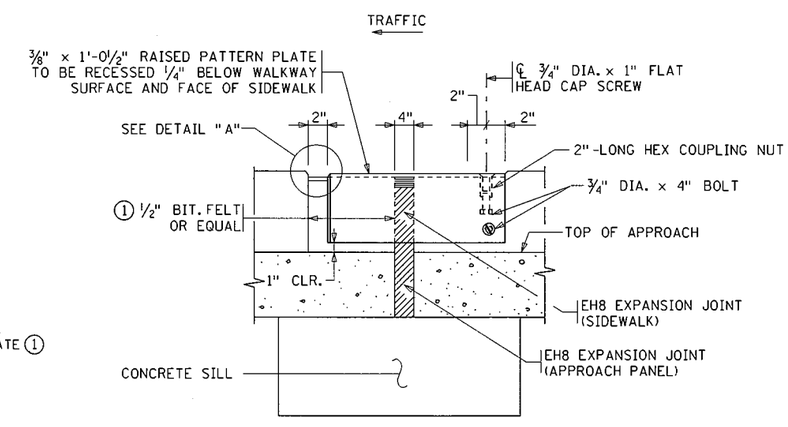

SIDEWALK ELEVATION

S.P. 179-020-031 S.P. 019-605-028

SHEET 8 OF 8

STANDARD PLAN SHEET NO. 5-297.229	TITLE: BRIDGE APPROACH PANEL JOINT DETAILS
STANDARD APPROVED: DEC 20, 2011	

STATE PROJ. NO. 1901-148 (TH 13) SHEET NO. 265 OF 442 SHEETS

PLOTTED/REVISED: 11-JUN-2012 11:47
DISTRICT #: METRO
USER NAME: s229_l_spn
PATH & FILENAME: Projects/DM_ROS/013/1901/148/Design/PlanSheets/Standard Plans/s229_l_spn.dgn
FILE NAME: s229_l_spn

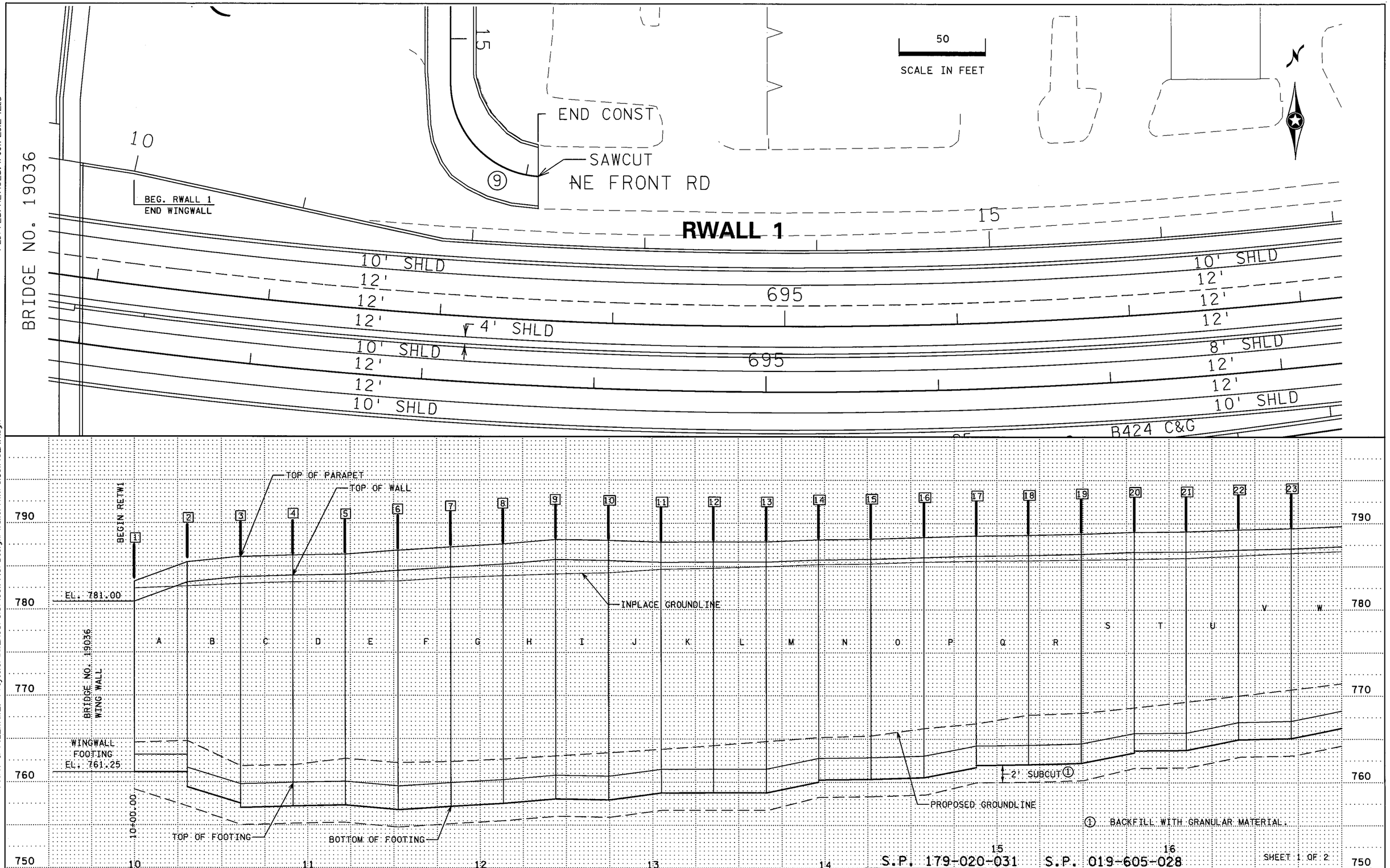

PLOTTED/REVISED: 11-JUN-2012 12:15

DISTRICT #: METRO
IPLOT NAME: dl901148_rwl13
PATH & FILENAME: Projects/DM_ROS/013/1901/148/Design/Walls/RWI/dl901148_rwl.dgn

DRAWN BY: GJ	CHECKED BY: HS	CERTIFIED BY LICENSED PROFESSIONAL ENGINEER	LIC. NO. 18520 DATE 6/18/12

RETW1 PLAN AND PROFILE

STATE PROJ. NO. 1901-148 (T.H. 13) SHEET NO. 266 OF 442 SHEETS

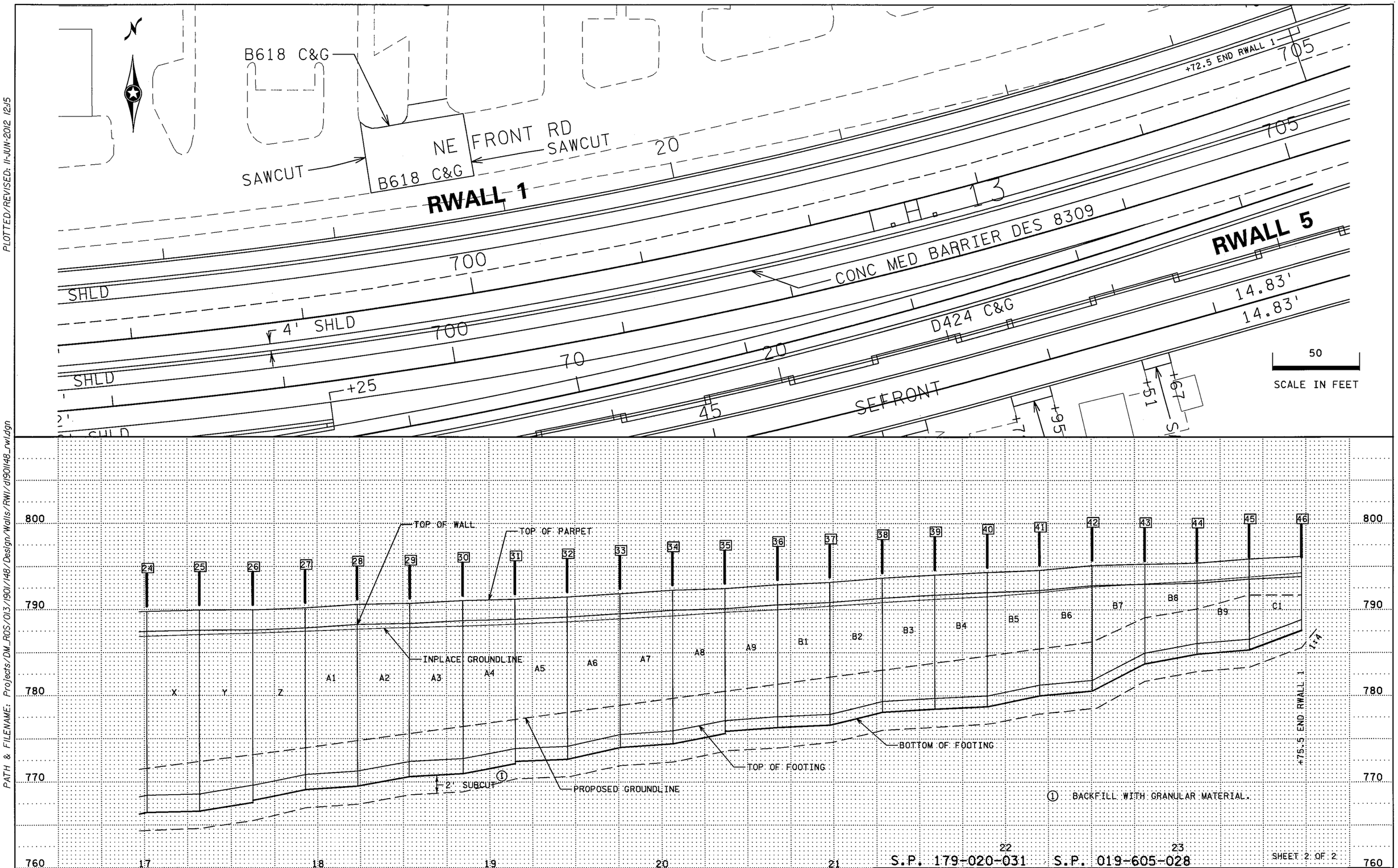

S.P. 179-020-031 S.P. 019-605-028

SHEET 2 OF 2

RETW1 PLAN AND PROFILE

DRAWN BY: GJ	CHECKED BY: HS	CERTIFIED BY _____ LICENSED PROFESSIONAL ENGINEER	LIC. NO. 18520 DATE 6/18/12	STATE PROJ. NO. 1901-148 (T.H. 13)	SHEET NO. 267 OF 442 SHEETS

PLOTTED/REVISED: 11-JUN-2012 12:15

DISTRICT #: METRO
IPLOT NAME: d190l148_rwl14
PATH & FILENAME: Projects/DM_ROS/013/190l/148/Design/Walls/RWl/d190l148_rwl.dgn

RETAINING WALL RETW1

LIVE LOAD SURCHARGE - SPECIAL DESIGN

JOINT NO.	STATION	X	Y	PROPOSED GROUND LINE	TOP OF WALL	TOP OF FOOTING HEEL	BOTTOM OF FOOTING	WALL HEIGHT	PANEL LENGTH	PANEL NAME
1	10+00.00	503148.273	209777.951	784.041	781.000	763.250	761.250	17.750		
2	10+30.50	503178.089	209771.528	783.220	783.250	761.750	759.500	21.500	30.50	A
3	10+61.00	503207.904	209765.104	781.991	783.870	759.870	757.120	24.000	30.50	B
4	10+91.50	503237.720	209758.680	780.653	784.050	760.050	757.300	24.000	30.50	C
5	11+22.00	503267.536	209752.256	779.226	784.160	760.160	757.410	24.000	30.50	D
6	11+52.50	503297.352	209745.832	777.926	784.610	759.610	756.860	25.000	30.50	E
7	11+83.00	503327.168	209739.408	776.791	785.010	760.010	757.260	25.000	30.50	F
8	12+13.50	503357.609	209737.510	775.810	785.360	760.360	757.610	25.000	30.50	G
9	12+44.00	503388.067	209735.926	774.984	785.880	760.880	758.130	25.000	30.50	H
10	12+74.50	503418.541	209734.654	774.313	785.770	760.770	758.020	25.000	30.50	I
11	13+05.00	503449.025	209733.696	773.797	785.590	761.590	758.840	24.000	30.50	J
12	13+35.50	503479.518	209733.051	773.437	785.620	761.620	758.870	24.000	30.50	K
13	13+66.00	503510.016	209732.719	773.233	785.620	761.620	758.870	24.000	30.50	L
14	13+96.50	503540.516	209732.701	772.988	785.870	762.870	760.370	23.000	30.50	M
15	14+27.00	503571.015	209732.996	772.866	785.950	762.950	760.450	23.000	30.50	N
16	14+57.50	503601.509	209733.605	772.901	786.150	763.150	760.650	23.000	30.50	O
17	14+88.00	503631.994	209734.526	773.092	786.340	764.340	762.090	22.000	30.50	P
18	15+18.50	503662.469	209735.762	773.439	786.420	764.420	762.170	22.000	30.50	Q
19	15+49.00	503692.930	209737.310	773.942	786.580	764.580	762.330	22.000	30.50	R
20	15+79.50	503723.373	209739.171	774.581	786.780	765.780	763.780	21.000	30.50	S
21	16+10.00	503753.795	209741.345	775.249	786.840	765.840	763.840	21.000	30.50	T
22	16+40.50	503784.194	209743.831	775.919	787.060	767.060	765.060	20.000	30.50	U
23	16+71.00	503814.565	209746.630	776.761	787.200	767.200	765.200	20.000	30.50	V
24	17+01.50	503844.906	209749.740	777.374	787.440	768.440	766.440	19.000	30.50	W
25	17+32.00	503875.213	209753.163	778.154	787.600	768.600	766.600	19.000	30.50	X
26	17+62.50	503905.483	209756.896	778.675	787.620	769.620	767.870	18.000	30.50	Y
27	17+93.00	503935.714	209760.940	779.360	787.870	770.870	769.120	17.000	30.50	Z
28	18+23.50	503965.901	209765.295	780.115	788.260	771.260	769.510	17.000	30.50	A1
29	18+54.00	503996.042	209769.960	780.837	788.370	772.370	770.620	16.000	30.50	A2
30	18+84.50	504026.134	209774.934	781.561	788.720	772.720	770.970	16.000	30.50	A3
31	19+15.00	504056.173	209780.217	782.287	788.880	773.880	772.380	15.000	30.50	A4
32	19+45.50	504086.156	209785.809	783.014	789.130	774.130	772.630	15.000	30.50	A5
33	19+76.00	504116.079	209791.708	783.744	789.510	775.510	774.010	14.000	30.50	A6
34	20+06.50	504145.941	209797.915	784.475	789.940	775.940	774.440	14.000	30.50	A7
35	20+37.00	504175.737	209804.428	785.206	790.120	777.120	775.870	13.000	30.50	A8
36	20+67.50	504205.465	209811.247	785.940	790.550	777.550	776.300	13.000	30.50	A9
37	20+98.00	504235.121	209818.371	786.676	790.840	777.840	776.590	13.000	30.50	B1
38	21+28.50	504264.703	209825.799	787.413	791.340	779.340	778.090	12.000	30.50	B2
39	21+59.00	504294.206	209833.532	788.132	791.700	779.700	778.450	12.000	30.50	B3
40	21+89.50	504323.629	209841.566	788.723	791.980	779.980	778.730	12.000	30.50	B4
41	22+20.00	504352.967	209849.903	789.334	792.240	781.240	779.990	11.000	30.50	B5
42	22+50.50	504382.218	209858.541	789.966	792.800	781.800	780.550	11.000	30.50	B6
43	22+81.00	504411.379	209867.479	790.607	792.960	784.960	783.710	8.000	30.50	B7
44	23+11.50	504440.442	209876.716	791.256	793.080	786.080	784.830	7.000	30.50	B8
45	23+42.00	504469.418	209886.251	791.912	793.560	786.560	785.310	7.000	30.50	B9
46	23+72.50	504498.289	209896.084	795.686	793.850	788.850	787.600	5.000	30.50	C1

① CONSISTS OF PARAPET BARRIER DOWEL BAR IDENTIFIED AS THE Q BAR. FOR DETAILS, SEE SHEET NO. 336.

② FOR DETAILS, SEE SHEET NO. 342.

SUMMARY OF QUANTITIES FOR RETAINING WALL RETW1

(STANDARD MN/DOT CANTILEVER DESIGN)

PANEL	STRUCTURAL CONCRETE		REINFORCEMENT BARS			TYPE P-1(TL-2) RAILING CONCRETE (3Y46)②	ARCHITECTURAL CONCRETE TEXTURE (RANDOM BATTEN)	ARCHITECTURAL SURFACE FINISH (SINGLE COLOR)
	1A43 (FOOTING)	3Y43 (STEM)	PLAIN (WALL)	EPOXY (WALL)	EPOXY① (PARAPET)			
	CU YD	CU YD	LB	LB	LB	LIN FT	SQ FT	SQ FT
A	32.4	43.4	2621	5973	341	30.5	529.6	753.7
B	42.6	51.4	2868	7459	341	30.5	614.7	871.8
C	42.6	54.2	2868	7464	341	30.5	669.5	910.0
D	42.6	54.2	2868	7464	341	30.5	660.8	910.0
E	44.2	55.9	3054	8923	341	30.5	665.4	925.2
F	44.2	57.1	3054	8923	341	30.5	683.8	940.5
G	44.2	57.1	3054	8923	341	30.5	688.7	940.5
H	44.2	57.1	3054	8923	341	30.5	692.0	940.5
I	44.2	57.1	3054	8923	341	30.5	686.9	940.5
J	44.2	55.9	3054	8923	341	30.5	670.2	925.2
K	42.6	54.2	2868	7464	341	30.5	655.1	910.0
L	42.6	54.2	2868	7468	341	30.5	642.0	910.0
M	37.2	52.5	2587	6976	341	30.5	631.4	894.7
N	37.2	51.4	2587	6976	341	30.5	626.2	879.5
O	37.2	51.4	2587	6976	341	30.5	614.4	879.5
P	37.2	50.3	2587	6976	341	30.5	598.4	864.2
Q	32.4	48.7	2621	6015	341	30.5	671.0	849.0
R	32.4	48.7	2621	6015	341	30.5	563.5	848.7
S	32.4	47.6	2621	6015	341	30.5	556.0	833.4
T	27.9	46.0	2176	5643	341	30.5	540.3	818.5
U	26.7	44.4	1872	5282	341	30.5	523.8	803.2
V	26.7	43.3	1872	5282	341	30.5	610.0	788.0
W	24.7	41.8	1655	4570	341	30.5	537.6	835.0
X	24.7	40.7	1655	4570	341	30.5	474.4	757.5
Y	24.7	39.6	1655	4570	341	30.5	453.2	742.2
Z	20.8	37.1	1541	4273	341	30.5	432.6	711.7
A1	19.8	35.6	1495	3664	341	30.5	417.4	696.5
A2	19.8	34.6	1495	3664	341	30.5	400.0	681.0
A3	18.8	33.1	1262	3419	341	30.5	382.0	666.2
A4	18.8	32.1	1262	3419	341	30.5	364.8	650.7
A5	15.4	30.7	1223	3162	341	30.5	346.0	635.5
A6	15.4	29.7	1223	3162	341	30.5	330.6	620.2
A7	14.5	28.3	1235	2739	341	30.5	318.0	605.0
A8	14.5	27.3	1235	2739	341	30.5	302.3	589.7
A9	12.8	26.0	1229	2556	341	30.5	286.6	574.5
B1	12.8	26.0	1229	2556	341	30.5	272.5	574.5
B2	12.8	25.0	1229	2556	341	30.5	259.6	559.2
B3	12.3	23.7	1079	2385	341	30.5	247.7	544.0
B4	12.3	23.7	1079	2385	341	30.5	232.4	544.0
B5	12.3	22.7	1079	2385	341	30.5	215.6	528.7
B6	10.8	21.5	954	2189	341	30.5	203.1	513.5
B7	10.8	18.6	954	2173	341	30.5	105.2	467.7
B8	8.3	14.1	633	1605	341	30.5	104.6	406.7
B9	7.4	13.0	601	1507	341	30.5	73.8	391.5
C1	7.4	11.2	601	1476	341	30.5	61.2	361.0
TOTALS	1189.8	1728.8	87019.0	226710.0	15345.0	1372.5	20614.9	32993.1

S.P. 179-020-031 S.P. 019-605-028

SHEET 1 OF 1

RETW1 TABULATIONS

DRAWN BY: GJ | CHECKED BY: HS | CERTIFIED BY [signature] LICENSED PROFESSIONAL ENGINEER | LIC. NO. 18520 DATE 6/18/12

STATE PROJ. NO. 1901-148 (T.H. 13) SHEET NO. 268 OF 442 SHEETS

PLOTTED/REVISED: 11-JUN-2012 12:14
DISTRICT #: METRO
IPLOT NAME: d190148_rwll
PATH & FILENAME: Projects/DM_ROS/013/1901/148/Design/Walls/RWI/d190148_rwl.dgn

STEM HEIGHT:	AT HIGH END= 21'-6"	AT LOW END = 17'-9"
2-ft L.L. SURCHARGE	Panel: A	PANEL LENGTH = 30'-6"

Bar	Mark	No.	Length	A	Location	Weight
SPREAD FOOTING REINFORCEMENT						
A	F1901	24	33'-5"	STR.	LONG T & B	1205
B	F2202	31	11'-2"	STR.	TRANS BOT	708
C	F2203	31	11'-2"	STR.	TRANS TOP	708
FOOTING DOWELS & STEM REINFORCEMENT						
D	F1604E	31	3'-0"	STR.	DOWEL FF	97
E	F2505E	31	15'-5"	6'-7"	DOWEL BF	1276
F	F2506E	30	11'-0"	10'-0"	DOWEL BF	881
G	S1301E	31	17'-3"	STR.	VERT FF	357
H	S1902E	31	19'-3"	STR.	VERT BF	896
J	S1903E	30	12'-3"	STR.	VERT BF	552
K	S1604E	31	10'-7"	4'-9"	TIE	342
L	S1305E	44	30'-0"	STR.	HORIZ EF	882
M	S1606E	20	7'-4"	1'-4"	EXP JT TIE	153
N	S1607E	20	7'-9"	1'-9"	EXP JT TIE	162
P	S1608E	4	8'-2"	2'-2"	EXP JT TIE	34
Q	S1609E	38	8'-7"	4'-0"	RAIL DOWEL	341
Q	-----	-----	-----	-----	F-RAILDOWEL	-----

Dimensions and quantities

DIMENSIONS			
SPREAD FOOTING			
b	4'-9"	e	1'-0"
c	2'-3"	f	6' 10-1/8"
d	11'-8"	g	4' 11- 5/16"

STEM			
a	2'-5"		
j	2' 0- 3/16"		

QUANTITIES		
STRUCTURAL CONCRETE (1A43)		
(FOOTING)		
SPREAD	32.4	cu.yd.
STRUCTURAL CONCRETE (3Y43)		
(STEM)		
	43.4	cu.yd.
REINFORCEMENT (PLAIN)		
SPREAD	2621	lb
REINFORCEMENT (EPOXY)		
Subtotal w/o Rail	5632	lb
Subtotal Rail Only	341	lb
TOTAL	5973	lb

STEM HEIGHT:	AT HIGH END= 24'-0"	AT LOW END = 21'-6"
2-ft L.L. SURCHARGE	Panel: B	PANEL LENGTH = 30'-6"

Bar	Mark	No.	Length	A	Location	Weight
SPREAD FOOTING REINFORCEMENT						
A	F1901	26	33'-5"	STR.	LONG T & B	1305
B	F1902	31	12'-1"	STR.	TRANS BOT	563
C	F2503	31	12'-1"	STR.	TRANS TOP	1000
FOOTING DOWELS & STEM REINFORCEMENT						
D	F1604E	31	3'-0"	STR.	DOWEL FF	97
E	F2905E	31	15'-10"	7'-0"	DOWEL BF	1669
F	F2906E	30	11'-3"	10'-0"	DOWEL BF	1148
G	S1301E	31	21'-0"	STR.	VERT FF	435
H	S2202E	31	21'-3"	STR.	VERT BF	1346
J	S2203E	30	12'-0"	STR.	VERT BF	736
K	S1604E	31	10'-7"	4'-9"	TIE	342
L	S1305E	48	30'-0"	STR.	HORIZ EF	962
M	S1606E	20	7'-4"	1'-4"	EXP JT TIE	153
N	S1607E	20	7'-9"	1'-9"	EXP JT TIE	162
P	S1608E	8	8'-2"	2'-2"	EXP JT TIE	68
Q	S1609E	38	8'-7"	4'-0"	RAIL DOWEL	341
Q	-----	-----	-----	-----	F-RAILDOWEL	-----

Dimensions and quantities

DIMENSIONS			
SPREAD FOOTING			
b	5'-3"	e	1'-0"
c	2'-9"	f	7' 5-3/8"
d	12'-9"	g	5' 5- 5/16"

STEM			
a	2'-6"		
j	2' 1-1/8"		

QUANTITIES		
STRUCTURAL CONCRETE (1A43)		
(FOOTING)		
SPREAD	42.6	cu.yd.
STRUCTURAL CONCRETE (3Y43)		
(STEM)		
	51.4	cu.yd.
REINFORCEMENT (PLAIN)		
SPREAD	2868	lb
REINFORCEMENT (EPOXY)		
Subtotal w/o Rail	7118	lb
Subtotal Rail Only	341	lb
TOTAL	7459	lb

STEM HEIGHT:	AT HIGH END= 24'-0"	AT LOW END = 24'-0"
2-ft L.L. SURCHARGE	Panel: C	PANEL LENGTH = 30'-6"

Bar	Mark	No.	Length	A	Location	Weight
SPREAD FOOTING REINFORCEMENT						
A	F1901	26	33'-5"	STR.	LONG T & B	1305
B	F1902	31	12'-1"	STR.	TRANS BOT	563
C	F2503	31	12'-1"	STR.	TRANS TOP	1000
FOOTING DOWELS & STEM REINFORCEMENT						
D	F1604E	31	3'-0"	STR.	DOWEL FF	97
E	F2905E	31	15'-10"	7'-0"	DOWEL BF	1669
F	F2906E	30	11'-3"	10'-0"	DOWEL BF	1148
G	S1301E	31	21'-3"	STR.	VERT FF	440
H	S2202E	31	21'-3"	STR.	VERT BF	1346
J	S2203E	30	12'-0"	STR.	VERT BF	736
K	S1604E	31	10'-7"	4'-9"	TIE	342
L	S1305E	48	30'-0"	STR.	HORIZ EF	962
M	S1606E	20	7'-4"	1'-4"	EXP JT TIE	153
N	S1607E	20	7'-9"	1'-9"	EXP JT TIE	162
P	S1608E	8	8'-2"	2'-2"	EXP JT TIE	68
Q	S1609E	38	8'-7"	4'-0"	RAIL DOWEL	341
Q	-----	-----	-----	-----	F-RAILDOWEL	-----

Dimensions and quantities

DIMENSIONS			
SPREAD FOOTING			
b	5'-3"	e	1'-0"
c	2'-9"	f	7' 5-3/8"
d	12'-9"	g	5' 5- 5/16"

STEM			
a	2'-6"		
j	2' 1-1/8"		

QUANTITIES		
STRUCTURAL CONCRETE (1A43)		
(FOOTING)		
SPREAD	42.6	cu.yd.
STRUCTURAL CONCRETE (3Y43)		
(STEM)		
	54.2	cu.yd.
REINFORCEMENT (PLAIN)		
SPREAD	2868	lb
REINFORCEMENT (EPOXY)		
Subtotal w/o Rail	7123	lb
Subtotal Rail Only	341	lb
TOTAL	7464	lb

STEM HEIGHT:	AT HIGH END= 24'-0"	AT LOW END = 24'-0"
2-ft L.L. SURCHARGE	Panel: D	PANEL LENGTH = 30'-6"

Bar	Mark	No.	Length	A	Location	Weight
SPREAD FOOTING REINFORCEMENT						
A	F1901	26	33'-5"	STR.	LONG T & B	1305
B	F1902	31	12'-1"	STR.	TRANS BOT	563
C	F2503	31	12'-1"	STR.	TRANS TOP	1000
FOOTING DOWELS & STEM REINFORCEMENT						
D	F1604E	31	3'-0"	STR.	DOWEL FF	97
E	F2905E	31	15'-10"	7'-0"	DOWEL BF	1669
F	F2906E	30	11'-3"	10'-0"	DOWEL BF	1148
G	S1301E	31	21'-3"	STR.	VERT FF	440
H	S2202E	31	21'-3"	STR.	VERT BF	1346
J	S2203E	30	12'-0"	STR.	VERT BF	736
K	S1604E	31	10'-7"	4'-9"	TIE	342
L	S1305E	48	30'-0"	STR.	HORIZ EF	962
M	S1606E	20	7'-4"	1'-4"	EXP JT TIE	153
N	S1607E	20	7'-9"	1'-9"	EXP JT TIE	162
P	S1608E	8	8'-2"	2'-2"	EXP JT TIE	68
Q	S1609E	38	8'-7"	4'-0"	RAIL DOWEL	341
Q	-----	-----	-----	-----	F-RAILDOWEL	-----

Dimensions and quantities

DIMENSIONS			
SPREAD FOOTING			
b	5'-3"	e	1'-0"
c	2'-9"	f	7' 5-3/8"
d	12'-9"	g	5' 5- 5/16"

STEM			
a	2'-6"		
j	2' 1-1/8"		

QUANTITIES		
STRUCTURAL CONCRETE (1A43)		
(FOOTING)		
SPREAD	42.6	cu.yd.
STRUCTURAL CONCRETE (3Y43)		
(STEM)		
	54.2	cu.yd.
REINFORCEMENT (PLAIN)		
SPREAD	2868	lb
REINFORCEMENT (EPOXY)		
Subtotal w/o Rail	7123	lb
Subtotal Rail Only	341	lb
TOTAL	7464	lb

S.P. 179-020-031 S.P. 019-605-028

SHEET 1 OF 12

RETW1 PANEL TABULATIONS

DRAWN BY: GJ | CHECKED BY: HS | CERTIFIED BY _____ LICENSED PROFESSIONAL ENGINEER | LIC. NO. 18520 DATE 6/18/12

STATE PROJ. NO. 1901-148 (T.H. 13) SHEET NO. 269 OF 442 SHEETS

PLOTTED/REVISED: 11-JUN-2012 12:14
DISTRICT #: METRO
IPLOT NAME: d1901148_rw1
PATH & FILENAME: Projects/DM_ROS/013/1901/148/Design/Walls/RW1/d1901148_rw1.dgn

STEM HEIGHT:	AT HIGH END= 25'-0"	AT LOW END = 24'-0"
2-ft L.L. SURCHARGE	Panel: E	PANEL LENGTH = 30'-6"

Bar	Mark	No.	Length	A	Location	Weight
SPREAD FOOTING REINFORCEMENT						
A	F1901	28	33'-5"	STR.	LONG T & B	1405
B	F1902	31	12'-9"	STR.	TRANS BOT	594
C	F2503	31	12'-9"	STR.	TRANS TOP	1055
FOOTING DOWELS & STEM REINFORCEMENT						
D	F1604E	31	3'-0"	STR.	DOWEL FF	97
E	F3205E	31	16'-0"	7'-3"	DOWEL BF	2134
F	F3206E	30	11'-4"	9'-11"	DOWEL BF	1463
G	S1301E	31	22'-3"	STR.	VERT FF	461
H	S2502E	31	22'-3"	STR.	VERT BF	1842
J	S2503E	30	10'-6"	STR.	VERT BF	841
K	S1604E	31	10'-7"	4'-9"	TIE	342
L	S1305E	50	30'-0"	STR.	HORIZ EF	1002
M	S1606E	20	7'-4"	1'-4"	EXP JT TIE	153
N	S1607E	20	7'-9"	1'-9"	EXP JT TIE	162
P	S1608E	10	8'-2"	2'-2"	EXP JT TIE	85
Q	S1609E	38	8'-7"	4'-0"	RAIL DOWEL	341
Q	-----	-----	-----	-----	F-RAILDOWEL	-----

DIMENSIONS			
SPREAD FOOTING			
b	5'-6"	e	1'-0"
c	2'-9"	f	7' 8-7/8"
d	13'-3"	g	5' 8- 5/16"
STEM			
a	2' 6-1/2"		
j	2' 1- 9/16"		

Dimensions and quantities	
QUANTITIES	
STRUCTURAL CONCRETE (1A43)	
(FOOTING)	
SPREAD	44.2 cu.yd.
STRUCTURAL CONCRETE (3Y43)	
(STEM)	
	55.9 cu.yd.
REINFORCEMENT (PLAIN)	
SPREAD	3054 lb
REINFORCEMENT (EPOXY)	
Subtotal w/o Rail	8582 lb
Subtotal Rail Only	341 lb
TOTAL	8923 lb

STEM HEIGHT:	AT HIGH END= 25'-0"	AT LOW END = 25'-0"
2-ft L.L. SURCHARGE	Panel: F	PANEL LENGTH = 30'-6"

Bar	Mark	No.	Length	A	Location	Weight
SPREAD FOOTING REINFORCEMENT						
A	F1901	28	33'-5"	STR.	LONG T & B	1405
B	F1902	31	12'-9"	STR.	TRANS BOT	594
C	F2503	31	12'-9"	STR.	TRANS TOP	1055
FOOTING DOWELS & STEM REINFORCEMENT						
D	F1604E	31	3'-0"	STR.	DOWEL FF	97
E	F3205E	31	16'-0"	7'-3"	DOWEL BF	2134
F	F3206E	30	11'-4"	9'-11"	DOWEL BF	1463
G	S1301E	31	22'-3"	STR.	VERT FF	461
H	S2502E	31	22'-3"	STR.	VERT BF	1842
J	S2503E	30	10'-6"	STR.	VERT BF	841
K	S1604E	31	10'-7"	4'-9"	TIE	342
L	S1305E	50	30'-0"	STR.	HORIZ EF	1002
M	S1606E	20	7'-4"	1'-4"	EXP JT TIE	153
N	S1607E	20	7'-9"	1'-9"	EXP JT TIE	162
P	S1608E	10	8'-2"	2'-2"	EXP JT TIE	85
Q	S1609E	38	8'-7"	4'-0"	RAIL DOWEL	341
Q	-----	-----	-----	-----	F-RAILDOWEL	-----

DIMENSIONS			
SPREAD FOOTING			
b	5'-6"	e	1'-0"
c	2'-9"	f	7' 8-7/8"
d	13'-3"	g	5' 8- 5/16"
STEM			
a	2' 6-1/2"		
j	2' 1- 9/16"		

Dimensions and quantities	
QUANTITIES	
STRUCTURAL CONCRETE (1A43)	
(FOOTING)	
SPREAD	44.2 cu.yd.
STRUCTURAL CONCRETE (3Y43)	
(STEM)	
	57.1 cu.yd.
REINFORCEMENT (PLAIN)	
SPREAD	3054 lb
REINFORCEMENT (EPOXY)	
Subtotal w/o Rail	8582 lb
Subtotal Rail Only	341 lb
TOTAL	8923 lb

STEM HEIGHT:	AT HIGH END= 25'-0"	AT LOW END = 25'-0"
2-ft L.L. SURCHARGE	Panel: G	PANEL LENGTH = 30'-6"

Bar	Mark	No.	Length	A	Location	Weight
SPREAD FOOTING REINFORCEMENT						
A	F1901	28	33'-5"	STR.	LONG T & B	1405
B	F1902	31	12'-9"	STR.	TRANS BOT	594
C	F2503	31	12'-9"	STR.	TRANS TOP	1055
FOOTING DOWELS & STEM REINFORCEMENT						
D	F1604E	31	3'-0"	STR.	DOWEL FF	97
E	F3205E	31	16'-0"	7'-3"	DOWEL BF	2134
F	F3206E	30	11'-4"	9'-11"	DOWEL BF	1463
G	S1301E	31	22'-3"	STR.	VERT FF	461
H	S2502E	31	22'-3"	STR.	VERT BF	1842
J	S2503E	30	10'-6"	STR.	VERT BF	841
K	S1604E	31	10'-7"	4'-9"	TIE	342
L	S1305E	50	30'-0"	STR.	HORIZ EF	1002
M	S1606E	20	7'-4"	1'-4"	EXP JT TIE	153
N	S1607E	20	7'-9"	1'-9"	EXP JT TIE	162
P	S1608E	10	8'-2"	2'-2"	EXP JT TIE	85
Q	S1609E	38	8'-7"	4'-0"	RAIL DOWEL	341
Q	-----	-----	-----	-----	F-RAILDOWEL	-----

DIMENSIONS			
SPREAD FOOTING			
b	5'-6"	e	1'-0"
c	2'-9"	f	7' 8-7/8"
d	13'-3"	g	5' 8- 5/16"
STEM			
a	2' 6-1/2"		
j	2' 1- 9/16"		

Dimensions and quantities	
QUANTITIES	
STRUCTURAL CONCRETE (1A43)	
(FOOTING)	
SPREAD	44.2 cu.yd.
STRUCTURAL CONCRETE (3Y43)	
(STEM)	
	57.1 cu.yd.
REINFORCEMENT (PLAIN)	
SPREAD	3054 lb
REINFORCEMENT (EPOXY)	
Subtotal w/o Rail	8582 lb
Subtotal Rail Only	341 lb
TOTAL	8923 lb

STEM HEIGHT:	AT HIGH END= 25'-0"	AT LOW END = 25'-0"
2-ft L.L. SURCHARGE	Panel: H	PANEL LENGTH = 30'-6"

Bar	Mark	No.	Length	A	Location	Weight
SPREAD FOOTING REINFORCEMENT						
A	F1901	28	33'-5"	STR.	LONG T & B	1405
B	F1902	31	12'-9"	STR.	TRANS BOT	594
C	F2503	31	12'-9"	STR.	TRANS TOP	1055
FOOTING DOWELS & STEM REINFORCEMENT						
D	F1604E	31	3'-0"	STR.	DOWEL FF	97
E	F3205E	31	16'-0"	7'-3"	DOWEL BF	2134
F	F3206E	30	11'-4"	9'-11"	DOWEL BF	1463
G	S1301E	31	22'-3"	STR.	VERT FF	461
H	S2502E	31	22'-3"	STR.	VERT BF	1842
J	S2503E	30	10'-6"	STR.	VERT BF	841
K	S1604E	31	10'-7"	4'-9"	TIE	342
L	S1305E	50	30'-0"	STR.	HORIZ EF	1002
M	S1606E	20	7'-4"	1'-4"	EXP JT TIE	153
N	S1607E	20	7'-9"	1'-9"	EXP JT TIE	162
P	S1608E	10	8'-2"	2'-2"	EXP JT TIE	85
Q	S1609E	38	8'-7"	4'-0"	RAIL DOWEL	341
Q	-----	-----	-----	-----	F-RAILDOWEL	-----

DIMENSIONS			
SPREAD FOOTING			
b	5'-6"	e	1'-0"
c	2'-9"	f	7' 8-7/8"
d	13'-3"	g	5' 8- 5/16"
STEM			
a	2' 6-1/2"		
j	2' 1- 9/16"		

Dimensions and quantities	
QUANTITIES	
STRUCTURAL CONCRETE (1A43)	
(FOOTING)	
SPREAD	44.2 cu.yd.
STRUCTURAL CONCRETE (3Y43)	
(STEM)	
	57.1 cu.yd.
REINFORCEMENT (PLAIN)	
SPREAD	3054 lb
REINFORCEMENT (EPOXY)	
Subtotal w/o Rail	8582 lb
Subtotal Rail Only	341 lb
TOTAL	8923 lb

S.P. 179-020-031 S.P. 019-605-028

SHEET 2 OF 12

RETW1 PANEL TABULATIONS

DRAWN BY: GJ | CHECKED BY: HS | CERTIFIED BY _____ LICENSED PROFESSIONAL ENGINEER LIC. NO. 18520 DATE 6/18/12

STATE PROJ. NO. 1901-148 (T.H. 13) SHEET NO. 270 OF 442 SHEETS

PLOTTED/REVISED: 12-JUN-2012 14:07
DISTRICT #: METRO
IPLOT NAME: d1901148_rw1
PATH & FILENAME: Projects/DM_ROS/013/1901/148/Design/Walls/RW1/d1901148_rw1.dgn

STEM HEIGHT:	AT HIGH END= 25'-0"	AT LOW END = 25'-0"
2-ft L.L. SURCHARGE	Panel: I	PANEL LENGTH = 30'-6"

Bar	Mark	No.	Length	A	Location	Weight
SPREAD FOOTING REINFORCEMENT						
A	F1901	28	33'-5"	STR.	LONG T & B	1405
B	F1902	31	12'-9"	STR.	TRANS BOT	594
C	F2503	31	12'-9"	STR.	TRANS TOP	1055
FOOTING DOWELS & STEM REINFORCEMENT						
D	F1604E	31	3'-0"	STR.	DOWEL FF	97
E	F3205E	31	16'-0"	7'-3"	DOWEL BF	2134
F	F3206E	30	11'-4"	9'-11"	DOWEL BF	1463
G	S1301E	31	22'-3"	STR.	VERT FF	461
H	S2502E	31	22'-3"	STR.	VERT BF	1842
J	S2503E	30	10'-6"	STR.	VERT BF	841
K	S1604E	31	10'-7"	4'-9"	TIE	342
L	S1305E	50	30'-0"	STR.	HORIZ EF	1002
M	S1606E	20	7'-4"	1'-4"	EXP JT TIE	153
N	S1607E	20	7'-9"	1'-9"	EXP JT TIE	162
P	S1608E	10	8'-2"	2'-2"	EXP JT TIE	85
Q	S1609E	38	8'-7"	4'-0"	RAIL DOWEL	341
Q	-----	-----	-----	-----	F-RAILDOWEL	-----

Dimensions and quantities

DIMENSIONS			
SPREAD FOOTING			
b	5'-6"	e	1'-0"
c	2'-9"	f	7' 8-7/8"
d	13'-3"	g	5' 8- 5/16"

STEM			
a	2' 6-1/2"		
j	2' 1- 9/16"		

QUANTITIES		
STRUCTURAL CONCRETE (1A43)		
(FOOTING)		
SPREAD	44.2	cu.yd.
STRUCTURAL CONCRETE (3Y43)		
(STEM)		
	57.1	cu.yd.
REINFORCEMENT (PLAIN)		
SPREAD	3054	lb
REINFORCEMENT (EPOXY)		
Subtotal w/o Rail	8582 lb	
Subtotal Rail Only	341 lb	
TOTAL	8923 lb	

STEM HEIGHT:	AT HIGH END= 25'-0"	AT LOW END = 24'-0"
2-ft L.L. SURCHARGE	Panel: J	PANEL LENGTH = 30'-6"

Bar	Mark	No.	Length	A	Location	Weight
SPREAD FOOTING REINFORCEMENT						
A	F1901	28	33'-5"	STR.	LONG T & B	1405
B	F1902	31	12'-9"	STR.	TRANS BOT	594
C	F2503	31	12'-9"	STR.	TRANS TOP	1055
FOOTING DOWELS & STEM REINFORCEMENT						
D	F1604E	31	3'-0"	STR.	DOWEL FF	97
E	F3205E	31	16'-0"	7'-3"	DOWEL BF	2134
F	F3206E	30	11'-4"	9'-11"	DOWEL BF	1463
G	S1301E	31	22'-3"	STR.	VERT FF	461
H	S2502E	31	22'-3"	STR.	VERT BF	1842
J	S2503E	30	10'-6"	STR.	VERT BF	841
K	S1604E	31	10'-7"	4'-9"	TIE	342
L	S1305E	50	30'-0"	STR.	HORIZ EF	1002
M	S1606E	20	7'-4"	1'-4"	EXP JT TIE	153
N	S1607E	20	7'-9"	1'-9"	EXP JT TIE	162
P	S1608E	10	8'-2"	2'-2"	EXP JT TIE	85
Q	S1609E	38	8'-7"	4'-0"	RAIL DOWEL	341
Q	-----	-----	-----	-----	F-RAILDOWEL	-----

Dimensions and quantities

DIMENSIONS			
SPREAD FOOTING			
b	5'-6"	e	1'-0"
c	2'-9"	f	7' 8-7/8"
d	13'-3"	g	5' 8- 5/16"

STEM			
a	2' 6-1/2"		
j	2' 1- 9/16"		

QUANTITIES		
STRUCTURAL CONCRETE (1A43)		
(FOOTING)		
SPREAD	44.2	cu.yd.
STRUCTURAL CONCRETE (3Y43)		
(STEM)		
	55.9	cu.yd.
REINFORCEMENT (PLAIN)		
SPREAD	3054	lb
REINFORCEMENT (EPOXY)		
Subtotal w/o Rail	8582 lb	
Subtotal Rail Only	341 lb	
TOTAL	8923 lb	

STEM HEIGHT:	AT HIGH END= 24'-0"	AT LOW END = 24'-0"
2-ft L.L. SURCHARGE	Panel: K	PANEL LENGTH = 30'-6"

Bar	Mark	No.	Length	A	Location	Weight
SPREAD FOOTING REINFORCEMENT						
A	F1901	26	33'-5"	STR.	LONG T & B	1305
B	F1902	31	12'-1"	STR.	TRANS BOT	563
C	F2503	31	12'-1"	STR.	TRANS TOP	1000
FOOTING DOWELS & STEM REINFORCEMENT						
D	F1604E	31	3'-0"	STR.	DOWEL FF	97
E	F2905E	31	15'-10"	7'-0"	DOWEL BF	1669
F	F2906E	30	11'-3"	10'-0"	DOWEL BF	1148
G	S1301E	31	21'-3"	STR.	VERT FF	440
H	S2202E	31	21'-3"	STR.	VERT BF	1346
J	S2203E	30	12'-0"	STR.	VERT BF	736
K	S1604E	31	10'-7"	4'-9"	TIE	342
L	S1305E	48	30'-0"	STR.	HORIZ EF	962
M	S1606E	20	7'-4"	1'-4"	EXP JT TIE	153
N	S1607E	20	7'-9"	1'-9"	EXP JT TIE	162
P	S1608E	8	8'-2"	2'-2"	EXP JT TIE	68
Q	S1609E	38	8'-7"	4'-0"	RAIL DOWEL	341
Q	-----	-----	-----	-----	F-RAILDOWEL	-----

Dimensions and quantities

DIMENSIONS			
SPREAD FOOTING			
b	5'-3"	e	1'-0"
c	2'-9"	f	7' 5-3/8"
d	12'-9"	g	5' 5- 5/16"

STEM			
a	2'-6"		
j	2' 1-1/8"		

QUANTITIES		
STRUCTURAL CONCRETE (1A43)		
(FOOTING)		
SPREAD	42.6	cu.yd.
STRUCTURAL CONCRETE (3Y43)		
(STEM)		
	54.2	cu.yd.
REINFORCEMENT (PLAIN)		
SPREAD	2868	lb
REINFORCEMENT (EPOXY)		
Subtotal w/o Rail	7123 lb	
Subtotal Rail Only	341 lb	
TOTAL	7464 lb	

STEM HEIGHT:	AT HIGH END= 24'-0"	AT LOW END = 24'-0"
2-ft L.L. SURCHARGE	Panel: L	PANEL LENGTH = 30'-6"

Bar	Mark	No.	Length	A	Location	Weight
SPREAD FOOTING REINFORCEMENT						
A	F1901	26	33'-5"	STR.	LONG T & B	1305
B	F1902	31	12'-1"	STR.	TRANS BOT	563
C	F2503	31	12'-1"	STR.	TRANS TOP	1000
FOOTING DOWELS & STEM REINFORCEMENT						
D	F1604E	31	3'-0"	STR.	DOWEL FF	97
E	F2905E	31	15'-10"	7'-0"	DOWEL BF	1669
F	F2906E	30	11'-3"	10'-0"	DOWEL BF	1148
G	S1301E	31	21'-3"	STR.	VERT FF	440
H	S2202E	31	21'-3"	STR.	VERT BF	1346
J	S2203E	30	12'-0"	STR.	VERT BF	736
K	S1604E	31	10'-7"	4'-9"	TIE	342
L	S1305E	48	30'-0"	STR.	HORIZ EF	962
M	S1606E	20	7'-4"	1'-4"	EXP JT TIE	153
N	S1607E	20	7'-9"	1'-9"	EXP JT TIE	162
P	S1608E	8	8'-2"	2'-2"	EXP JT TIE	68
Q	S1609E	38	8'-7"	4'-0"	RAIL DOWEL	341
Q	-----	-----	-----	-----	F-RAILDOWEL	-----

Dimensions and quantities

DIMENSIONS			
SPREAD FOOTING			
b	5'-3"	e	1'-0"
c	2'-9"	f	7' 5-3/8"
d	12'-9"	g	5' 5- 5/16"

STEM			
a	2'-6"		
j	2' 1-1/8"		

QUANTITIES		
STRUCTURAL CONCRETE (1A43)		
(FOOTING)		
SPREAD	42.6	cu.yd.
STRUCTURAL CONCRETE (3Y43)		
(STEM)		
	54.2	cu.yd.
REINFORCEMENT (PLAIN)		
SPREAD	2868	lb
REINFORCEMENT (EPOXY)		
Subtotal w/o Rail	7123 lb	
Subtotal Rail Only	341 lb	
TOTAL	7464 lb	

S.P. 179-020-031 S.P. 019-605-028

SHEET 3 OF 12

RETW1 PANEL TABULATIONS

DRAWN BY: GJ | CHECKED BY: HS | CERTIFIED BY _____ LICENSED PROFESSIONAL ENGINEER | LIC. NO. 18520 DATE 6/18/12

STATE PROJ. NO. 1901-148 (T.H. 13) SHEET NO. 271 OF 442 SHEETS

PLOTTED/REVISED: 11-JUN-2012 12:15

DISTRICT #: METRO
IPLOT NAME: d190148_rw15
PATH & FILENAME: Projects/DM_ROS/013/1901/148/Design/Walls/RW1/d190148_rw1.dgn

STEM HEIGHT:	AT HIGH END= 24'-0"				AT LOW END = 23'-0"					
2-ft L.L. SURCHARGE			Panel: M				PANEL LENGTH = 30'-6"			
Bar	Mark	No.	Length	A	Location	Weight	Dimensions and quantities			
SPREAD FOOTING REINFORCEMENT							DIMENSIONS			
A	F1901	26	33'-5"	STR.	LONG T & B	1305	SPREAD FOOTING			
B	F1902	31	11'-8"	STR.	TRANS BOT	543	b	5'-0"	e	1'-0"
C	F2203	31	11'-8"	STR.	TRANS TOP	739	c	2'-6"	f	7' 1-3/4"
							d	12'-2"	g	5' 2- 5/16"
							STEM			
							a	2' 5-1/2"		
							j	2' 0-5/8"		
FOOTING DOWELS & STEM REINFORCEMENT							QUANTITIES			
D	F1604E	31	3'-0"	STR.	DOWEL FF	97	STRUCTURAL CONCRETE (1A43)			
E	F2905E	31	14'-4"	6'-9"	DOWEL BF	1511	(FOOTING)			
F	F2906E	30	10'-0"	8'-9"	DOWEL BF	1020	SPREAD	37.2	cu.yd.	
G	S1301E	31	20'-3"	STR.	VERT FF	419				
H	S2202E	31	20'-3"	STR.	VERT BF	1283	STRUCTURAL CONCRETE (3Y43)			
J	S2203E	30	11'-0"	STR.	VERT BF	675	(STEM)			
K	S1604E	31	10'-7"	4'-9"	TIE	342	52.5	cu.yd.		
L	S1305E	46	30'-0"	STR.	HORIZ EF	922	REINFORCEMENT (PLAIN)			
M	S1606E	20	7'-4"	1'-4"	EXP JT TIE	153	SPREAD	2587	lb	
N	S1607E	20	7'-9"	1'-9"	EXP JT TIE	162				
P	S1608E	6	8'-2"	2'-2"	EXP JT TIE	51	REINFORCEMENT (EPOXY)			
Q	S1609E	38	8'-7"	4'-0"	RAIL DOWEL	341	Subtotal w/o Rail	6635 lb		
Q	-----	-----	-----	-----	F-RAILDOWEL	-----	Subtotal Rail Only	341 lb		
							TOTAL	6976 lb		

STEM HEIGHT:	AT HIGH END= 23'-0"				AT LOW END = 23'-0"					
2-ft L.L. SURCHARGE			Panel: N				PANEL LENGTH = 30'-6"			
Bar	Mark	No.	Length	A	Location	Weight	Dimensions and quantities			
SPREAD FOOTING REINFORCEMENT							DIMENSIONS			
A	F1901	26	33'-5"	STR.	LONG T & B	1305	SPREAD FOOTING			
B	F1902	31	11'-8"	STR.	TRANS BOT	543	b	5'-0"	e	1'-0"
C	F2203	31	11'-8"	STR.	TRANS TOP	739	c	2'-6"	f	7' 1-3/4"
							d	12'-2"	g	5' 2- 5/16"
							STEM			
							a	2' 5-1/2"		
							j	2' 0-5/8"		
FOOTING DOWELS & STEM REINFORCEMENT							QUANTITIES			
D	F1604E	31	3'-0"	STR.	DOWEL FF	97	STRUCTURAL CONCRETE (1A43)			
E	F2905E	31	14'-4"	6'-9"	DOWEL BF	1511	(FOOTING)			
F	F2906E	30	10'-0"	8'-9"	DOWEL BF	1020	SPREAD	37.2	cu.yd.	
G	S1301E	31	20'-3"	STR.	VERT FF	419				
H	S2202E	31	20'-3"	STR.	VERT BF	1283	STRUCTURAL CONCRETE (3Y43)			
J	S2203E	30	11'-0"	STR.	VERT BF	675	(STEM)			
K	S1604E	31	10'-7"	4'-9"	TIE	342	51.4	cu.yd.		
L	S1305E	46	30'-0"	STR.	HORIZ EF	922	REINFORCEMENT (PLAIN)			
M	S1606E	20	7'-4"	1'-4"	EXP JT TIE	153	SPREAD	2587	lb	
N	S1607E	20	7'-9"	1'-9"	EXP JT TIE	162				
P	S1608E	6	8'-2"	2'-2"	EXP JT TIE	51	REINFORCEMENT (EPOXY)			
Q	S1609E	38	8'-7"	4'-0"	RAIL DOWEL	341	Subtotal w/o Rail	6635 lb		
Q	-----	-----	-----	-----	F-RAILDOWEL	-----	Subtotal Rail Only	341 lb		
							TOTAL	6976 lb		

STEM HEIGHT:	AT HIGH END= 23'-0"				AT LOW END = 23'-0"					
2-ft L.L. SURCHARGE			Panel: O				PANEL LENGTH = 30'-6"			
Bar	Mark	No.	Length	A	Location	Weight	Dimensions and quantities			
SPREAD FOOTING REINFORCEMENT							DIMENSIONS			
A	F1901	26	33'-5"	STR.	LONG T & B	1305	SPREAD FOOTING			
B	F1902	31	11'-8"	STR.	TRANS BOT	543	b	5'-0"	e	1'-0"
C	F2203	31	11'-8"	STR.	TRANS TOP	739	c	2'-6"	f	7' 1-3/4"
							d	12'-2"	g	5' 2- 5/16"
							STEM			
							a	2' 5-1/2"		
							j	2' 0-5/8"		
FOOTING DOWELS & STEM REINFORCEMENT							QUANTITIES			
D	F1604E	31	3'-0"	STR.	DOWEL FF	97	STRUCTURAL CONCRETE (1A43)			
E	F2905E	31	14'-4"	6'-9"	DOWEL BF	1511	(FOOTING)			
F	F2906E	30	10'-0"	8'-9"	DOWEL BF	1020	SPREAD	37.2	cu.yd.	
G	S1301E	31	20'-3"	STR.	VERT FF	419				
H	S2202E	31	20'-3"	STR.	VERT BF	1283	STRUCTURAL CONCRETE (3Y43)			
J	S2203E	30	11'-0"	STR.	VERT BF	675	(STEM)			
K	S1604E	31	10'-7"	4'-9"	TIE	342	51.4	cu.yd.		
L	S1305E	46	30'-0"	STR.	HORIZ EF	922	REINFORCEMENT (PLAIN)			
M	S1606E	20	7'-4"	1'-4"	EXP JT TIE	153	SPREAD	2587	lb	
N	S1607E	20	7'-9"	1'-9"	EXP JT TIE	162				
P	S1608E	6	8'-2"	2'-2"	EXP JT TIE	51	REINFORCEMENT (EPOXY)			
Q	S1609E	38	8'-7"	4'-0"	RAIL DOWEL	341	Subtotal w/o Rail	6635 lb		
Q	-----	-----	-----	-----	F-RAILDOWEL	-----	Subtotal Rail Only	341 lb		
							TOTAL	6976 lb		

STEM HEIGHT:	AT HIGH END= 23'-0"				AT LOW END = 22'-0"					
2-ft L.L. SURCHARGE			Panel: P				PANEL LENGTH = 30'-6"			
Bar	Mark	No.	Length	A	Location	Weight	Dimensions and quantities			
SPREAD FOOTING REINFORCEMENT							DIMENSIONS			
A	F1901	26	33'-5"	STR.	LONG T & B	1305	SPREAD FOOTING			
B	F1902	31	11'-8"	STR.	TRANS BOT	543	b	5'-0"	e	1'-0"
C	F2203	31	11'-8"	STR.	TRANS TOP	739	c	2'-6"	f	7' 1-3/4"
							d	12'-2"	g	5' 2- 5/16"
							STEM			
							a	2' 5-1/2"		
							j	2' 0-5/8"		
FOOTING DOWELS & STEM REINFORCEMENT							QUANTITIES			
D	F1604E	31	3'-0"	STR.	DOWEL FF	97	STRUCTURAL CONCRETE (1A43)			
E	F2905E	31	14'-4"	6'-9"	DOWEL BF	1511	(FOOTING)			
F	F2906E	30	10'-0"	8'-9"	DOWEL BF	1020	SPREAD	37.2	cu.yd.	
G	S1301E	31	20'-3"	STR.	VERT FF	419				
H	S2202E	31	20'-3"	STR.	VERT BF	1283	STRUCTURAL CONCRETE (3Y43)			
J	S2203E	30	11'-0"	STR.	VERT BF	675	(STEM)			
K	S1604E	31	10'-7"	4'-9"	TIE	342	50.3	cu.yd.		
L	S1305E	46	30'-0"	STR.	HORIZ EF	922	REINFORCEMENT (PLAIN)			
M	S1606E	20	7'-4"	1'-4"	EXP JT TIE	153	SPREAD	2587	lb	
N	S1607E	20	7'-9"	1'-9"	EXP JT TIE	162				
P	S1608E	6	8'-2"	2'-2"	EXP JT TIE	51	REINFORCEMENT (EPOXY)			
Q	S1609E	38	8'-7"	4'-0"	RAIL DOWEL	341	Subtotal w/o Rail	6635 lb		
Q	-----	-----	-----	-----	F-RAILDOWEL	-----	Subtotal Rail Only	341 lb		
							TOTAL	6976 lb		

PLOTTED/REVISED: 11-JUN-2012 12:15
DISTRICT 4: METRO
IPLOT NAME: d1901148_rw13
PATH & FILENAME: Projects/DM_ROS/013/1901/148/Design/Walls/RW1/d1901148_rw1.dgn

S.P. 179-020-031 S.P. 019-605-028

RETW1 PANEL TABULATIONS

DRAWN BY: GJ | CHECKED BY: HS | CERTIFIED BY _____ LICENSED PROFESSIONAL ENGINEER | LIC. NO. 18520 DATE 6/18/12

STATE PROJ. NO. 1901-148 (T.H. 13) SHEET NO. 272 OF 442 SHEETS

STEM HEIGHT:	AT HIGH END= 22'-0"	AT LOW END = 22'-0"
2-ft L.L. SURCHARGE	Panel: Q	PANEL LENGTH = 30'-6"

Bar	Mark	No.	Length	A	Location	Weight
SPREAD FOOTING REINFORCEMENT						
A	F1901	24	33'-5"	STR.	LONG T & B	1205
B	F2202	31	11'-2"	STR.	TRANS BOT	708
C	F2203	31	11'-2"	STR.	TRANS TOP	708
FOOTING DOWELS & STEM REINFORCEMENT						
D	F1604E	31	3'-0"	STR.	DOWEL FF	97
E	F2505E	31	15'-5"	6'-7"	DOWEL BF	1276
F	F2506E	30	11'-0"	10'-0"	DOWEL BF	881
G	S1301E	31	19'-3"	STR.	VERT FF	399
H	S1902E	31	19'-3"	STR.	VERT BF	896
J	S1903E	30	12'-3"	STR.	VERT BF	552
K	S1604E	31	10'-7"	4'-9"	TIE	342
L	S1305E	44	30'-0"	STR.	HORIZ EF	882
M	S1606E	20	7'-4"	1'-4"	EXP JT TIE	153
N	S1607E	20	7'-9"	1'-9"	EXP JT TIE	162
P	S1608E	4	8'-2"	2'-2"	EXP JT TIE	34
Q	S1609E	38	8'-7"	4'-0"	RAIL DOWEL	341
Q	-----	-----	-----	-----	F-RAILDOWEL	-----

Dimensions and quantities			
DIMENSIONS			
SPREAD FOOTING			
b	4'-9"	e	1'-0"
c	2'-3"	f	6' 10-1/8"
d	11'-8"	g	4' 11- 5/16"
STEM			
a	2'-5"		
j	2' 0- 3/16"		
QUANTITIES			
STRUCTURAL CONCRETE (1A43)			
(FOOTING)			
SPREAD	32.4	cu.yd.	
STRUCTURAL CONCRETE (3Y43)			
(STEM)			
	48.7	cu.yd.	
REINFORCEMENT (PLAIN)			
SPREAD	2621	lb	
REINFORCEMENT (EPOXY)			
Subtotal w/o Rail	5674 lb		
Subtotal Rail Only	341 lb		
TOTAL	6015 lb		

STEM HEIGHT:	AT HIGH END= 22'-0"	AT LOW END = 21'-0"
2-ft L.L. SURCHARGE	Panel: S	PANEL LENGTH = 30'-6"

Bar	Mark	No.	Length	A	Location	Weight
SPREAD FOOTING REINFORCEMENT						
A	F1901	24	33'-5"	STR.	LONG T & B	1205
B	F2202	31	11'-2"	STR.	TRANS BOT	708
C	F2203	31	11'-2"	STR.	TRANS TOP	708
FOOTING DOWELS & STEM REINFORCEMENT						
D	F1604E	31	3'-0"	STR.	DOWEL FF	97
E	F2505E	31	15'-5"	6'-7"	DOWEL BF	1276
F	F2506E	30	11'-0"	10'-0"	DOWEL BF	881
G	S1301E	31	19'-3"	STR.	VERT FF	399
H	S1902E	31	19'-3"	STR.	VERT BF	896
J	S1903E	30	12'-3"	STR.	VERT BF	552
K	S1604E	31	10'-7"	4'-9"	TIE	342
L	S1305E	44	30'-0"	STR.	HORIZ EF	882
M	S1606E	20	7'-4"	1'-4"	EXP JT TIE	153
N	S1607E	20	7'-9"	1'-9"	EXP JT TIE	162
P	S1608E	4	8'-2"	2'-2"	EXP JT TIE	34
Q	S1609E	38	8'-7"	4'-0"	RAIL DOWEL	341
Q	-----	-----	-----	-----	F-RAILDOWEL	-----

Dimensions and quantities			
DIMENSIONS			
SPREAD FOOTING			
b	4'-9"	e	1'-0"
c	2'-3"	f	6' 10-1/8"
d	11'-8"	g	4' 11- 5/16"
STEM			
a	2'-5"		
j	2' 0- 3/16"		
QUANTITIES			
STRUCTURAL CONCRETE (1A43)			
(FOOTING)			
SPREAD	32.4	cu.yd.	
STRUCTURAL CONCRETE (3Y43)			
(STEM)			
	47.6	cu.yd.	
REINFORCEMENT (PLAIN)			
SPREAD	2621	lb	
REINFORCEMENT (EPOXY)			
Subtotal w/o Rail	5674 lb		
Subtotal Rail Only	341 lb		
TOTAL	6015 lb		

STEM HEIGHT:	AT HIGH END= 22'-0"	AT LOW END = 22'-0"
2-ft L.L. SURCHARGE	Panel: R	PANEL LENGTH = 30'-6"

Bar	Mark	No.	Length	A	Location	Weight
SPREAD FOOTING REINFORCEMENT						
A	F1901	24	33'-5"	STR.	LONG T & B	1205
B	F2202	31	11'-2"	STR.	TRANS BOT	708
C	F2203	31	11'-2"	STR.	TRANS TOP	708
FOOTING DOWELS & STEM REINFORCEMENT						
D	F1604E	31	3'-0"	STR.	DOWEL FF	97
E	F2505E	31	15'-5"	6'-7"	DOWEL BF	1276
F	F2506E	30	11'-0"	10'-0"	DOWEL BF	881
G	S1301E	31	19'-3"	STR.	VERT FF	399
H	S1902E	31	19'-3"	STR.	VERT BF	896
J	S1903E	30	12'-3"	STR.	VERT BF	552
K	S1604E	31	10'-7"	4'-9"	TIE	342
L	S1305E	44	30'-0"	STR.	HORIZ EF	882
M	S1606E	20	7'-4"	1'-4"	EXP JT TIE	153
N	S1607E	20	7'-9"	1'-9"	EXP JT TIE	162
P	S1608E	4	8'-2"	2'-2"	EXP JT TIE	34
Q	S1609E	38	8'-7"	4'-0"	RAIL DOWEL	341
Q	-----	-----	-----	-----	F-RAILDOWEL	-----

Dimensions and quantities			
DIMENSIONS			
SPREAD FOOTING			
b	4'-9"	e	1'-0"
c	2'-3"	f	6' 10-1/8"
d	11'-8"	g	4' 11- 5/16"
STEM			
a	2'-5"		
j	2' 0- 3/16"		
QUANTITIES			
STRUCTURAL CONCRETE (1A43)			
(FOOTING)			
SPREAD	32.4	cu.yd.	
STRUCTURAL CONCRETE (3Y43)			
(STEM)			
	48.7	cu.yd.	
REINFORCEMENT (PLAIN)			
SPREAD	2621	lb	
REINFORCEMENT (EPOXY)			
Subtotal w/o Rail	5674 lb		
Subtotal Rail Only	341 lb		
TOTAL	6015 lb		

STEM HEIGHT:	AT HIGH END= 21'-0"	AT LOW END = 21'-0"
2-ft L.L. SURCHARGE	Panel: T	PANEL LENGTH = 30'-6"

Bar	Mark	No.	Length	A	Location	Weight
SPREAD FOOTING REINFORCEMENT						
A	F1601	24	32'-11"	STR.	LONG T & B	824
B	F2202	31	10'-8"	STR.	TRANS BOT	676
C	F2203	31	10'-8"	STR.	TRANS TOP	676
FOOTING DOWELS & STEM REINFORCEMENT						
D	F1604E	31	3'-0"	STR.	DOWEL FF	97
E	F2505E	31	14'-2"	6'-5"	DOWEL BF	1173
F	F2506E	30	9'-9"	8'-9"	DOWEL BF	781
G	S1301E	31	18'-3"	STR.	VERT FF	378
H	S1902E	31	18'-3"	STR.	VERT BF	850
J	S1903E	30	11'-3"	STR.	VERT BF	507
K	S1604E	31	10'-7"	4'-9"	TIE	342
L	S1305E	42	30'-0"	STR.	HORIZ EF	842
M	S1606E	20	7'-4"	1'-4"	EXP JT TIE	153
N	S1607E	20	7'-9"	1'-9"	EXP JT TIE	162
P	S1608E	2	8'-2"	2'-2"	EXP JT TIE	17
Q	S1609E	38	8'-7"	4'-0"	RAIL DOWEL	341
Q	-----	-----	-----	-----	F-RAILDOWEL	-----

Dimensions and quantities			
DIMENSIONS			
SPREAD FOOTING			
b	4'-6"	e	1'-0"
c	2'-0"	f	6' 6-1/2"
d	11'-2"	g	4' 8- 5/16"
STEM			
a	2' 4-1/2"		
j	1' 11-11/16"		
QUANTITIES			
STRUCTURAL CONCRETE (1A43)			
(FOOTING)			
SPREAD	27.9	cu.yd.	
STRUCTURAL CONCRETE (3Y43)			
(STEM)			
	46.0	cu.yd.	
REINFORCEMENT (PLAIN)			
SPREAD	2176	lb	
REINFORCEMENT (EPOXY)			
Subtotal w/o Rail	5302 lb		
Subtotal Rail Only	341 lb		
TOTAL	5643 lb		

PLOTTED/REVISED: 11-JUN-2012 12:15
DISTRICT #: METRO
IPLOT NAME: d1901148_rw14
PATH & FILENAME: Projects/DM_ROS/013/1901/148/Design/Walls/RW1/d1901148_rw1.dgn

S.P. 179-020-031 S.P. 019-605-028

RETW1 PANEL TABULATIONS

DRAWN BY: GJ | CHECKED BY: HS | CERTIFIED BY LICENSED PROFESSIONAL ENGINEER | LIC. NO. 18520 DATE 6/18/12

STEM HEIGHT:	AT HIGH END= 21'-0"	AT LOW END = 20'-0"
2-ft L.L. SURCHARGE	Panel: U	PANEL LENGTH = 30'-6"

Bar	Mark	No.	Length	A	Location	Weight
SPREAD FOOTING REINFORCEMENT						
A	F1601	22	32'-11"	STR.	LONG T & B	755
B	F1902	31	10'-2"	STR.	TRANS BOT	473
C	F2203	31	10'-2"	STR.	TRANS TOP	644
FOOTING DOWELS & STEM REINFORCEMENT						
D	F1604E	31	3'-0"	STR.	DOWEL FF	97
E	F2505E	31	12'-10"	6'-1"	DOWEL BF	1062
F	F2506E	30	8'-9"	7'-9"	DOWEL BF	701
G	S1301E	31	17'-3"	STR.	VERT FF	357
H	S1902E	31	17'-3"	STR.	VERT BF	803
J	S1903E	30	10'-3"	STR.	VERT BF	462
K	S1604E	31	10'-7"	4'-9"	TIE	342
L	S1305E	40	30'-0"	STR.	HORIZ EF	802
M	S1606E	20	7'-4"	1'-4"	EXP JT TIE	153
N	S1607E	20	7'-9"	1'-9"	EXP JT TIE	162
P	S1608E	-----	8'-2"	2'-2"	EXP JT TIE	-----
Q	S1609E	38	8'-7"	4'-0"	RAIL DOWEL	341
Q	-----	-----	-----	-----	F-RAILDOWEL	-----

Dimensions and quantities

DIMENSIONS			
SPREAD FOOTING			
b	4'-3"	e	1'-0"
c	2'-0"	f	6'-3"
d	10'-8"	g	4' 5- 5/16"

STEM			
a	2'-4"		
j	1' 11- 3/16"		

QUANTITIES	
STRUCTURAL CONCRETE (1A43)	
(FOOTING)	
SPREAD	26.7 cu.yd.
STRUCTURAL CONCRETE (3Y43)	
(STEM)	
	44.4 cu.yd.
REINFORCEMENT (PLAIN)	
SPREAD	1872 lb
REINFORCEMENT (EPOXY)	
Subtotal w/o Rail	4941 lb
Subtotal Rail Only	341 lb
TOTAL	5282 lb

STEM HEIGHT:	AT HIGH END= 20'-0"	AT LOW END = 20'-0"
2-ft L.L. SURCHARGE	Panel: V	PANEL LENGTH = 30'-6"

Bar	Mark	No.	Length	A	Location	Weight
SPREAD FOOTING REINFORCEMENT						
A	F1601	22	32'-11"	STR.	LONG T & B	755
B	F1902	31	10'-2"	STR.	TRANS BOT	473
C	F2203	31	10'-2"	STR.	TRANS TOP	644
FOOTING DOWELS & STEM REINFORCEMENT						
D	F1604E	31	3'-0"	STR.	DOWEL FF	97
E	F2505E	31	12'-10"	6'-1"	DOWEL BF	1062
F	F2506E	30	8'-9"	7'-9"	DOWEL BF	701
G	S1301E	31	17'-3"	STR.	VERT FF	357
H	S1902E	31	17'-3"	STR.	VERT BF	803
J	S1903E	30	10'-3"	STR.	VERT BF	462
K	S1604E	31	10'-7"	4'-9"	TIE	342
L	S1305E	40	30'-0"	STR.	HORIZ EF	802
M	S1606E	20	7'-4"	1'-4"	EXP JT TIE	153
N	S1607E	20	7'-9"	1'-9"	EXP JT TIE	162
P	S1608E	-----	8'-2"	2'-2"	EXP JT TIE	-----
Q	S1609E	38	8'-7"	4'-0"	RAIL DOWEL	341
Q	-----	-----	-----	-----	F-RAILDOWEL	-----

Dimensions and quantities

DIMENSIONS			
SPREAD FOOTING			
b	4'-3"	e	1'-0"
c	2'-0"	f	6'-3"
d	10'-8"	g	4' 5- 5/16"

STEM			
a	2'-4"		
j	1' 11- 3/16"		

QUANTITIES	
STRUCTURAL CONCRETE (1A43)	
(FOOTING)	
SPREAD	26.7 cu.yd.
STRUCTURAL CONCRETE (3Y43)	
(STEM)	
	43.3 cu.yd.
REINFORCEMENT (PLAIN)	
SPREAD	1872 lb
REINFORCEMENT (EPOXY)	
Subtotal w/o Rail	4941 lb
Subtotal Rail Only	341 lb
TOTAL	5282 lb

STEM HEIGHT:	AT HIGH END= 20'-0"	AT LOW END = 19'-0"
2-ft L.L. SURCHARGE	Panel: W	PANEL LENGTH = 30'-6"

Bar	Mark	No.	Length	A	Location	Weight
SPREAD FOOTING REINFORCEMENT						
A	F1601	22	32'-11"	STR.	LONG T & B	755
B	F1902	31	9'-8"	STR.	TRANS BOT	450
C	F1903	31	9'-8"	STR.	TRANS TOP	450
FOOTING DOWELS & STEM REINFORCEMENT						
D	F1604E	31	3'-0"	STR.	DOWEL FF	97
E	F2205E	31	14'-0"	5'-9"	DOWEL BF	887
F	F2206E	30	10'-3"	9'-3"	DOWEL BF	629
G	S1301E	31	16'-3"	STR.	VERT FF	337
H	S1602E	31	16'-3"	STR.	VERT BF	525
J	S1603E	30	11'-3"	STR.	VERT BF	352
K	S1604E	31	10'-7"	4'-9"	TIE	342
L	S1305E	38	30'-0"	STR.	HORIZ EF	762
M	S1606E	20	7'-4"	1'-4"	EXP JT TIE	153
N	S1607E	18	7'-9"	1'-9"	EXP JT TIE	145
P	S1608E	-----	8'-2"	2'-2"	EXP JT TIE	-----
Q	S1609E	38	8'-7"	4'-0"	RAIL DOWEL	341
Q	-----	-----	-----	-----	F-RAILDOWEL	-----

Dimensions and quantities

DIMENSIONS			
SPREAD FOOTING			
b	4'-0"	e	1'-0"
c	2'-0"	f	5' 11-1/2"
d	10'-2"	g	4' 2- 5/16"

STEM			
a	2' 3-1/2"		
j	1' 10-3/4"		

QUANTITIES	
STRUCTURAL CONCRETE (1A43)	
(FOOTING)	
SPREAD	24.7 cu.yd.
STRUCTURAL CONCRETE (3Y43)	
(STEM)	
	41.8 cu.yd.
REINFORCEMENT (PLAIN)	
SPREAD	1655 lb
REINFORCEMENT (EPOXY)	
Subtotal w/o Rail	4229 lb
Subtotal Rail Only	341 lb
TOTAL	4570 lb

STEM HEIGHT:	AT HIGH END= 19'-0"	AT LOW END = 19'-0"
2-ft L.L. SURCHARGE	Panel: X	PANEL LENGTH = 30'-6"

Bar	Mark	No.	Length	A	Location	Weight
SPREAD FOOTING REINFORCEMENT						
A	F1601	22	32'-11"	STR.	LONG T & B	755
B	F1902	31	9'-8"	STR.	TRANS BOT	450
C	F1903	31	9'-8"	STR.	TRANS TOP	450
FOOTING DOWELS & STEM REINFORCEMENT						
D	F1604E	31	3'-0"	STR.	DOWEL FF	97
E	F2205E	31	14'-0"	5'-9"	DOWEL BF	887
F	F2206E	30	10'-3"	9'-3"	DOWEL BF	629
G	S1301E	31	16'-3"	STR.	VERT FF	337
H	S1602E	31	16'-3"	STR.	VERT BF	525
J	S1603E	30	11'-3"	STR.	VERT BF	352
K	S1604E	31	10'-7"	4'-9"	TIE	342
L	S1305E	38	30'-0"	STR.	HORIZ EF	762
M	S1606E	20	7'-4"	1'-4"	EXP JT TIE	153
N	S1607E	18	7'-9"	1'-9"	EXP JT TIE	145
P	S1608E	-----	8'-2"	2'-2"	EXP JT TIE	-----
Q	S1609E	38	8'-7"	4'-0"	RAIL DOWEL	341
Q	-----	-----	-----	-----	F-RAILDOWEL	-----

Dimensions and quantities

DIMENSIONS			
SPREAD FOOTING			
b	4'-0"	e	1'-0"
c	2'-0"	f	5' 11-1/2"
d	10'-2"	g	4' 2- 5/16"

STEM			
a	2' 3-1/2"		
j	1' 10-3/4"		

QUANTITIES	
STRUCTURAL CONCRETE (1A43)	
(FOOTING)	
SPREAD	24.7 cu.yd.
STRUCTURAL CONCRETE (3Y43)	
(STEM)	
	40.7 cu.yd.
REINFORCEMENT (PLAIN)	
SPREAD	1655 lb
REINFORCEMENT (EPOXY)	
Subtotal w/o Rail	4229 lb
Subtotal Rail Only	341 lb
TOTAL	4570 lb

S.P. 179-020-031 S.P. 019-605-028

SHEET 6 OF 12

RETW1 PANEL TABULATIONS

DRAWN BY: GJ | CHECKED BY: HS | CERTIFIED BY _____ LICENSED PROFESSIONAL ENGINEER | LIC. NO. 18520 DATE 6/18/12

STATE PROJ. NO. 1901-148 (T.H. 13) SHEET NO. 274 OF 442 SHEETS

PLOTTED/REVISED: 11-JUN-2012 12:15
DISTRICT #: METRO
IPLOT NAME: d1901148_rw16
PATH & FILENAME: Projects/DM_ROS/013/1901/148/Design/Walls/RW1/d1901148_rw1.dgn

STEM HEIGHT:	AT HIGH END= 19'-0"	AT LOW END = 18'-0"
2-ft L.L. SURCHARGE	Panel: Y	PANEL LENGTH = 30'-6"

Bar	Mark	No.	Length	A	Location	Weight
SPREAD FOOTING REINFORCEMENT						
A	F1601	22	32'-11"	STR.	LONG T & B	755
B	F1902	31	9'-8"	STR.	TRANS BOT	450
C	F1903	31	9'-8"	STR.	TRANS TOP	450
FOOTING DOWELS & STEM REINFORCEMENT						
D	F1604E	31	3'-0"	STR.	DOWEL FF	97
E	F2205E	31	14'-0"	5'-9"	DOWEL BF	887
F	F2206E	30	10'-3"	9'-3"	DOWEL BF	629
G	S1301E	31	16'-3"	STR.	VERT FF	337
H	S1602E	31	16'-3"	STR.	VERT BF	525
J	S1603E	30	11'-3"	STR.	VERT BF	352
K	S1604E	31	10'-7"	4'-9"	TIE	342
L	S1305E	38	30'-0"	STR.	HORIZ EF	762
M	S1606E	20	7'-4"	1'-4"	EXP JT TIE	153
N	S1607E	18	7'-9"	1'-9"	EXP JT TIE	145
P	S1608E	-----	8'-2"	2'-2"	EXP JT TIE	-----
Q	S1609E	38	8'-7"	4'-0"	RAIL DOWEL	341
Q	-----	-----	-----	-----	F-RAILDOWEL	-----

Dimensions and quantities

DIMENSIONS			
SPREAD FOOTING			
b	4'-0"	e	1'-0"
c	2'-0"	f	5' 11-1/2"
d	10'-2"	g	4' 2- 5/16"

STEM			
a	2' 3-1/2"		
j	1' 10-3/4"		

QUANTITIES		
STRUCTURAL CONCRETE (1A43)		
(FOOTING)		
SPREAD	24.7	cu.yd.
STRUCTURAL CONCRETE (3Y43)		
(STEM)		
	39.6	cu.yd.
REINFORCEMENT (PLAIN)		
SPREAD	1655	lb
REINFORCEMENT (EPOXY)		
Subtotal w/o Rail	4229	lb
Subtotal Rail Only	341	lb
TOTAL	4570	lb

STEM HEIGHT:	AT HIGH END= 18'-0"	AT LOW END = 17'-0"
2-ft L.L. SURCHARGE	Panel: Z	PANEL LENGTH = 30'-6"

Bar	Mark	No.	Length	A	Location	Weight
SPREAD FOOTING REINFORCEMENT						
A	F1601	20	32'-11"	STR.	LONG T & B	687
B	F1902	31	9'-2"	STR.	TRANS BOT	427
C	F1903	31	9'-2"	STR.	TRANS TOP	427
FOOTING DOWELS & STEM REINFORCEMENT						
D	F1604E	31	3'-0"	STR.	DOWEL FF	97
E	F2205E	31	12'-9"	5'-6"	DOWEL BF	808
F	F2206E	30	9'-0"	8'-0"	DOWEL BF	552
G	S1301E	31	15'-3"	STR.	VERT FF	316
H	S1602E	31	15'-3"	STR.	VERT BF	493
J	S1603E	30	10'-3"	STR.	VERT BF	321
K	S1604E	31	10'-7"	4'-9"	TIE	342
L	S1305E	36	30'-0"	STR.	HORIZ EF	721
M	S1606E	20	7'-4"	1'-4"	EXP JT TIE	153
N	S1607E	16	7'-9"	1'-9"	EXP JT TIE	129
P	S1608E	-----	8'-2"	2'-2"	EXP JT TIE	-----
Q	S1609E	38	8'-7"	4'-0"	RAIL DOWEL	341
Q	-----	-----	-----	-----	F-RAILDOWEL	-----

Dimensions and quantities

DIMENSIONS			
SPREAD FOOTING			
b	3'-9"	e	1'-0"
c	1'-9"	f	5' 7-7/8"
d	9'-8"	g	3' 11- 5/16"

STEM			
a	2'-3"		
j	1' 10-1/4"		

QUANTITIES		
STRUCTURAL CONCRETE (1A43)		
(FOOTING)		
SPREAD	20.8	cu.yd.
STRUCTURAL CONCRETE (3Y43)		
(STEM)		
	37.1	cu.yd.
REINFORCEMENT (PLAIN)		
SPREAD	1541	lb
REINFORCEMENT (EPOXY)		
Subtotal w/o Rail	3932	lb
Subtotal Rail Only	341	lb
TOTAL	4273	lb

STEM HEIGHT:	AT HIGH END= 17'-0"	AT LOW END = 17'-0"
2-ft L.L. SURCHARGE	Panel: A1	PANEL LENGTH = 30'-6"

Bar	Mark	No.	Length	A	Location	Weight
SPREAD FOOTING REINFORCEMENT						
A	F1601	20	32'-11"	STR.	LONG T & B	687
B	F1902	31	8'-8"	STR.	TRANS BOT	404
C	F1903	31	8'-8"	STR.	TRANS TOP	404
FOOTING DOWELS & STEM REINFORCEMENT						
D	F1604E	31	3'-0"	STR.	DOWEL FF	97
E	F1905E	31	11'-5"	5'-2"	DOWEL BF	532
F	F1906E	30	8'-0"	7'-0"	DOWEL BF	360
G	S1301E	31	14'-3"	STR.	VERT FF	295
H	S1602E	31	14'-3"	STR.	VERT BF	461
J	S1603E	30	9'-3"	STR.	VERT BF	289
K	S1604E	31	10'-7"	4'-9"	TIE	342
L	S1305E	34	30'-0"	STR.	HORIZ EF	681
M	S1606E	20	7'-4"	1'-4"	EXP JT TIE	153
N	S1607E	14	7'-9"	1'-9"	EXP JT TIE	113
P	S1608E	-----	8'-2"	2'-2"	EXP JT TIE	-----
Q	S1609E	38	8'-7"	4'-0"	RAIL DOWEL	341
Q	-----	-----	-----	-----	F-RAILDOWEL	-----

Dimensions and quantities

DIMENSIONS			
SPREAD FOOTING			
b	3'-6"	e	1'-0"
c	1'-9"	f	5' 4-3/8"
d	9'-2"	g	3' 8- 5/16"

STEM			
a	2' 2-1/2"		
j	1' 9-13/16"		

QUANTITIES		
STRUCTURAL CONCRETE (1A43)		
(FOOTING)		
SPREAD	19.8	cu.yd.
STRUCTURAL CONCRETE (3Y43)		
(STEM)		
	35.6	cu.yd.
REINFORCEMENT (PLAIN)		
SPREAD	1495	lb
REINFORCEMENT (EPOXY)		
Subtotal w/o Rail	3323	lb
Subtotal Rail Only	341	lb
TOTAL	3664	lb

STEM HEIGHT:	AT HIGH END= 17'-0"	AT LOW END = 16'-0"
2-ft L.L. SURCHARGE	Panel: A2	PANEL LENGTH = 30'-6"

Bar	Mark	No.	Length	A	Location	Weight
SPREAD FOOTING REINFORCEMENT						
A	F1601	20	32'-11"	STR.	LONG T & B	687
B	F1902	31	8'-8"	STR.	TRANS BOT	404
C	F1903	31	8'-8"	STR.	TRANS TOP	404
FOOTING DOWELS & STEM REINFORCEMENT						
D	F1604E	31	3'-0"	STR.	DOWEL FF	97
E	F1905E	31	11'-5"	5'-2"	DOWEL BF	532
F	F1906E	30	8'-0"	7'-0"	DOWEL BF	360
G	S1301E	31	14'-3"	STR.	VERT FF	295
H	S1602E	31	14'-3"	STR.	VERT BF	461
J	S1603E	30	9'-3"	STR.	VERT BF	289
K	S1604E	31	10'-7"	4'-9"	TIE	342
L	S1305E	34	30'-0"	STR.	HORIZ EF	681
M	S1606E	20	7'-4"	1'-4"	EXP JT TIE	153
N	S1607E	14	7'-9"	1'-9"	EXP JT TIE	113
P	S1608E	-----	8'-2"	2'-2"	EXP JT TIE	-----
Q	S1609E	38	8'-7"	4'-0"	RAIL DOWEL	341
Q	-----	-----	-----	-----	F-RAILDOWEL	-----

Dimensions and quantities

DIMENSIONS			
SPREAD FOOTING			
b	3'-6"	e	1'-0"
c	1'-9"	f	5' 4-3/8"
d	9'-2"	g	3' 8- 5/16"

STEM			
a	2' 2-1/2"		
j	1' 9-13/16"		

QUANTITIES		
STRUCTURAL CONCRETE (1A43)		
(FOOTING)		
SPREAD	19.8	cu.yd.
	34.6	cu.yd.
REINFORCEMENT (PLAIN)		
SPREAD	1495	lb
REINFORCEMENT (EPOXY)		
Subtotal w/o Rail	3323	lb
Subtotal Rail Only	341	lb
TOTAL	3664	lb

S.P. 179-020-031 S.P. 019-605-028

SHEET 7 OF 12

RETW1 PANEL TABULATIONS

DRAWN BY: GJ | CHECKED BY: HS | CERTIFIED BY LICENSED PROFESSIONAL ENGINEER LIC. NO. 18520 DATE 6/18/12

STATE PROJ. NO. 1901-148 (T.H. 13) SHEET NO. 275 OF 442 SHEETS

PLOTTED/REVISED: 11-JUN-2012 12:15
DISTRICT #: METRO
IPLOT NAME: d190ll48_rwll2
PATH & FILENAME: Projects/DM_ROS/013/1901/148/Design/Walls/RWI/d190ll48_rw1.dgn

STEM HEIGHT:	AT HIGH END= 16'-0"	AT LOW END = 16'-0"
2-ft L.L. SURCHARGE	Panel: A3	PANEL LENGTH = 30'-6"

Bar	Mark	No.	Length	A	Location	Weight
SPREAD FOOTING REINFORCEMENT						
A	F1601	18	32'-11"	STR.	LONG T & B	618
B	F1902	31	8'-2"	STR.	TRANS BOT	380
C	F1603	31	8'-2"	STR.	TRANS TOP	264
FOOTING DOWELS & STEM REINFORCEMENT						
D	F1604E	31	3'-0"	STR.	DOWEL FF	97
E	F1905E	31	10'-2"	4'-11"	DOWEL BF	473
F	F1906E	30	7'-0"	6'-0"	DOWEL BF	315
G	S1301E	31	13'-3"	STR.	VERT FF	274
H	S1602E	31	13'-3"	STR.	VERT BF	428
J	S1603E	30	8'-3"	STR.	VERT BF	258
K	S1604E	31	10'-7"	4'-9"	TIE	342
L	S1305E	32	30'-0"	STR.	HORIZ EF	641
M	S1606E	20	7'-4"	1'-4"	EXP JT TIE	153
N	S1607E	12	7'-9"	1'-9"	EXP JT TIE	97
P	S1608E	-----	8'-2"	2'-2"	EXP JT TIE	-----
Q	S1609E	38	8'-7"	4'-0"	RAIL DOWEL	341
Q	-----	-----	-----	-----	F-RAILDOWEL	-----

Dimensions and quantities

DIMENSIONS			
SPREAD FOOTING			
b	3'-3"	e	1'-0"
c	1'-9"	f	5' 0-7/8"
d	8'-8"	g	3' 5- 5/16"

STEM			
a	2'-2"		
j	1' 9- 5/16"		

QUANTITIES	
STRUCTURAL CONCRETE (1A43)	
(FOOTING)	
SPREAD	18.8 cu.yd.
STRUCTURAL CONCRETE (3Y43)	
(STEM)	
	33.1 cu.yd.
REINFORCEMENT (PLAIN)	
SPREAD	1262 lb
REINFORCEMENT (EPOXY)	
Subtotal w/o Rail	3078 lb
Subtotal Rail Only	341 lb
TOTAL	3419 lb

STEM HEIGHT:	AT HIGH END= 16'-0"	AT LOW END = 15'-0"
2-ft L.L. SURCHARGE	Panel: A4	PANEL LENGTH = 30'-6"

Bar	Mark	No.	Length	A	Location	Weight
SPREAD FOOTING REINFORCEMENT						
A	F1601	18	32'-11"	STR.	LONG T & B	618
B	F1902	31	8'-2"	STR.	TRANS BOT	380
C	F1603	31	8'-2"	STR.	TRANS TOP	264
FOOTING DOWELS & STEM REINFORCEMENT						
D	F1604E	31	3'-0"	STR.	DOWEL FF	97
E	F1905E	31	10'-2"	4'-11"	DOWEL BF	473
F	F1906E	30	7'-0"	6'-0"	DOWEL BF	315
G	S1301E	31	13'-3"	STR.	VERT FF	274
H	S1602E	31	13'-3"	STR.	VERT BF	428
J	S1603E	30	8'-3"	STR.	VERT BF	258
K	S1604E	31	10'-7"	4'-9"	TIE	342
L	S1305E	32	30'-0"	STR.	HORIZ EF	641
M	S1606E	20	7'-4"	1'-4"	EXP JT TIE	153
N	S1607E	12	7'-9"	1'-9"	EXP JT TIE	97
P	S1608E	-----	8'-2"	2'-2"	EXP JT TIE	-----
Q	S1609E	38	8'-7"	4'-0"	RAIL DOWEL	341
Q	-----	-----	-----	-----	F-RAILDOWEL	-----

Dimensions and quantities

DIMENSIONS			
SPREAD FOOTING			
b	3'-3"	e	1'-0"
c	1'-9"	f	5' 0-7/8"
d	8'-8"	g	3' 5- 5/16"

STEM			
a	2'-2"		
j	1' 9- 5/16"		

QUANTITIES	
STRUCTURAL CONCRETE (1A43)	
(FOOTING)	
SPREAD	18.8 cu.yd.
STRUCTURAL CONCRETE (3Y43)	
(STEM)	
	32.1 cu.yd.
REINFORCEMENT (PLAIN)	
SPREAD	1262 lb
REINFORCEMENT (EPOXY)	
Subtotal w/o Rail	3078 lb
Subtotal Rail Only	341 lb
TOTAL	3419 lb

STEM HEIGHT:	AT HIGH END= 15'-0"	AT LOW END = 15'-0"
2-ft L.L. SURCHARGE	Panel: A5	PANEL LENGTH = 30'-6"

Bar	Mark	No.	Length	A	Location	Weight
SPREAD FOOTING REINFORCEMENT						
A	F1601	18	32'-11"	STR.	LONG T & B	618
B	F1902	31	7'-8"	STR.	TRANS BOT	357
C	F1603	31	7'-8"	STR.	TRANS TOP	248
FOOTING DOWELS & STEM REINFORCEMENT						
D	F1604E	31	3'-0"	STR.	DOWEL FF	97
E	F1905E	31	8'-10"	4'-7"	DOWEL BF	411
F	F1906E	30	5'-9"	4'-9"	DOWEL BF	259
G	S1301E	31	12'-3"	STR.	VERT FF	254
H	S1602E	31	12'-3"	STR.	VERT BF	396
J	S1603E	30	7'-3"	STR.	VERT BF	227
K	S1604E	31	10'-7"	4'-9"	TIE	342
L	S1305E	30	30'-0"	STR.	HORIZ EF	601
M	S1606E	20	7'-4"	1'-4"	EXP JT TIE	153
N	S1607E	10	7'-9"	1'-9"	EXP JT TIE	81
P	S1608E	-----	8'-2"	2'-2"	EXP JT TIE	-----
Q	S1609E	38	8'-7"	4'-0"	RAIL DOWEL	341
Q	-----	-----	-----	-----	F-RAILDOWEL	-----

Dimensions and quantities

DIMENSIONS			
SPREAD FOOTING			
b	3'-0"	e	1'-0"
c	1'-6"	f	4' 9-1/4"
d	8'-2"	g	3' 2- 5/16"

STEM			
a	2' 1-1/2"		
j	1' 8-13/16"		

QUANTITIES	
STRUCTURAL CONCRETE (1A43)	
(FOOTING)	
SPREAD	15.4 cu.yd.
STRUCTURAL CONCRETE (3Y43)	
(STEM)	
	30.7 cu.yd.
REINFORCEMENT (PLAIN)	
SPREAD	1223 lb
REINFORCEMENT (EPOXY)	
Subtotal w/o Rail	2821 lb
Subtotal Rail Only	341 lb
TOTAL	3162 lb

STEM HEIGHT:	AT HIGH END= 15'-0"	AT LOW END = 14'-0"
2-ft L.L. SURCHARGE	Panel: A6	PANEL LENGTH = 30'-6"

Bar	Mark	No.	Length	A	Location	Weight
SPREAD FOOTING REINFORCEMENT						
A	F1601	18	32'-11"	STR.	LONG T & B	618
B	F1902	31	7'-8"	STR.	TRANS BOT	357
C	F1603	31	7'-8"	STR.	TRANS TOP	248
FOOTING DOWELS & STEM REINFORCEMENT						
D	F1604E	31	3'-0"	STR.	DOWEL FF	97
E	F1905E	31	8'-10"	4'-7"	DOWEL BF	411
F	F1906E	30	5'-9"	4'-9"	DOWEL BF	259
G	S1301E	31	12'-3"	STR.	VERT FF	254
H	S1602E	31	12'-3"	STR.	VERT BF	396
J	S1603E	30	7'-3"	STR.	VERT BF	227
K	S1604E	31	10'-7"	4'-9"	TIE	342
L	S1305E	30	30'-0"	STR.	HORIZ EF	601
M	S1606E	20	7'-4"	1'-4"	EXP JT TIE	153
N	S1607E	10	7'-9"	1'-9"	EXP JT TIE	81
P	S1608E	-----	8'-2"	2'-2"	EXP JT TIE	-----
Q	S1609E	38	8'-7"	4'-0"	RAIL DOWEL	341
Q	-----	-----	-----	-----	F-RAILDOWEL	-----

Dimensions and quantities

DIMENSIONS			
SPREAD FOOTING			
b	3'-0"	e	1'-0"
c	1'-6"	f	4' 9-1/4"
d	8'-2"	g	3' 2- 5/16"

STEM			
a	2' 1-1/2"		
j	1' 8-13/16"		

QUANTITIES	
STRUCTURAL CONCRETE (1A43)	
(FOOTING)	
SPREAD	15.4 cu.yd.
STRUCTURAL CONCRETE (3Y43)	
(STEM)	
	29.7 cu.yd.
REINFORCEMENT (PLAIN)	
SPREAD	1223 lb
REINFORCEMENT (EPOXY)	
Subtotal w/o Rail	2821 lb
Subtotal Rail Only	341 lb
TOTAL	3162 lb

PLOTTED/REVISED: 11-JUN-2012 12:15
DISTRICT #: METRO
IPLOT NAME: d1901148_rw19
PATH & FILENAME: Projects/DM_ROS/013/1901/148/Design/Walls/RWI/d1901148_rw1.dgn

S.P. 179-020-031 S.P. 019-605-028

RETW1 PANEL TABULATIONS

DRAWN BY: GJ | CHECKED BY: HS | CERTIFIED BY LICENSED PROFESSIONAL ENGINEER | LIC. NO. 18520 DATE 6/18/12

STEM HEIGHT:	AT HIGH END= 14'-0"	AT LOW END = 14'-0"
2-ft L.L. SURCHARGE	Panel: A7	PANEL LENGTH = 30'-6"

Bar	Mark	No.	Length	A	Location	Weight
SPREAD FOOTING REINFORCEMENT						
A	F1601	16	32'-11"	STR.	LONG T & B	549
B	F2202	31	7'-2"	STR.	TRANS BOT	454
C	F1603	31	7'-2"	STR.	TRANS TOP	232
FOOTING DOWELS & STEM REINFORCEMENT						
D	F1604E	31	3'-0"	STR.	DOWEL FF	97
E	F1605E	31	8'-10"	0'-10"	DOWEL BF	286
F	F1606E	30	9'-6"	8'-6"	DOWEL BF	297
G	S1301E	31	11'-3"	STR.	VERT FF	233
H	S1602E	31	11'-3"	STR.	VERT BF	364
J	S 03E	-----	-----	STR.	VERT BF	-----
K	S1604E	31	10'-7"	4'-9"	TIE	342
L	S1305E	28	30'-0"	STR.	HORIZ EF	561
M	S1606E	20	7'-4"	1'-4"	EXP JT TIE	153
N	S1607E	8	7'-9"	1'-9"	EXP JT TIE	65
P	S1608E	-----	8'-2"	2'-2"	EXP JT TIE	-----
Q	S1609E	38	8'-7"	4'-0"	RAIL DOWEL	341
Q	-----	-----	-----	-----	F-RAILDOWEL	-----

Dimensions and quantities

DIMENSIONS			
SPREAD FOOTING			
b	2'-9"	e	1'-0"
c	1'-6"	f	4' 5-3/4"
d	7'-8"	g	2' 11-5/16"

STEM			
a	2'-1"		
j	1' 8-3/8"		

QUANTITIES		
STRUCTURAL CONCRETE (1A43)		
(FOOTING)		
SPREAD	14.5	cu.yd.
STRUCTURAL CONCRETE (3Y43)		
(STEM)		
	28.3	cu.yd.
REINFORCEMENT (PLAIN)		
SPREAD	1235	lb
REINFORCEMENT (EPOXY)		
Subtotal w/o Rail	2398	lb
Subtotal Rail Only	341	lb
TOTAL	2739	lb

STEM HEIGHT:	AT HIGH END= 14'-0"	AT LOW END = 13'-0"
2-ft L.L. SURCHARGE	Panel: A8	PANEL LENGTH = 30'-6"

Bar	Mark	No.	Length	A	Location	Weight
SPREAD FOOTING REINFORCEMENT						
A	F1601	16	32'-11"	STR.	LONG T & B	549
B	F2202	31	7'-2"	STR.	TRANS BOT	454
C	F1603	31	7'-2"	STR.	TRANS TOP	232
FOOTING DOWELS & STEM REINFORCEMENT						
D	F1604E	31	3'-0"	STR.	DOWEL FF	97
E	F1605E	31	8'-10"	0'-10"	DOWEL BF	286
F	F1606E	30	9'-6"	8'-6"	DOWEL BF	297
G	S1301E	31	11'-3"	STR.	VERT FF	233
H	S1602E	31	11'-3"	STR.	VERT BF	364
J	S 03E	-----	-----	STR.	VERT BF	-----
K	S1604E	31	10'-7"	4'-9"	TIE	342
L	S1305E	28	30'-0"	STR.	HORIZ EF	561
M	S1606E	2D	7'-4"	1'-4"	EXP JT TIE	153
N	S1607E	8	7'-9"	1'-9"	EXP JT TIE	65
P	S1608E	-----	8'-2"	2'-2"	EXP JT TIE	-----
Q	S1609E	38	8'-7"	4'-0"	RAIL DOWEL	341
Q	-----	-----	-----	-----	F-RAILDOWEL	-----

Dimensions and quantities

DIMENSIONS			
SPREAD FOOTING			
b	2'-9"	e	1'-0"
c	1'-6"	f	4' 5-3/4"
d	7'-8"	g	2' 11-5/16"

STEM			
a	2'-1"		
j	1' 8-3/8"		

QUANTITIES		
STRUCTURAL CONCRETE (1A43)		
(FOOTING)		
SPREAD	14.5	cu.yd.
STRUCTURAL CONCRETE (3Y43)		
(STEM)		
	27.3	cu.yd.
REINFORCEMENT (PLAIN)		
SPREAD	1235	lb
REINFORCEMENT (EPOXY)		
Subtotal w/o Rail	2398	lb
Subtotal Rail Only	341	lb
TOTAL	2739	lb

STEM HEIGHT:	AT HIGH END= 13'-0"	AT LOW END = 13'-0"
2-ft L.L. SURCHARGE	Panel: A9	PANEL LENGTH = 30'-6"

Bar	Mark	No.	Length	A	Location	Weight
SPREAD FOOTING REINFORCEMENT						
A	F1601	14	32'-11"	STR.	LONG T & B	481
B	F2502	31	6'-6"	STR.	TRANS BOT	538
C	F1603	31	6'-6"	STR.	TRANS TOP	210
FOOTING DOWELS & STEM REINFORCEMENT						
D	F1604E	31	3'-0"	STR.	DOWEL FF	97
E	F1605E	31	7'-10"	0'-10"	DOWEL BF	253
F	F1606E	30	8'-3"	7'-3"	DOWEL BF	258
G	S1301E	31	10'-3"	STR.	VERT FF	212
H	S1602E	31	10'-3"	STR.	VERT BF	331
J	S 03E	-----	-----	STR.	VERT BF	-----
K	S1604E	31	10'-7"	4'-9"	TIE	342
L	S1305E	26	30'-0"	STR.	HORIZ EF	521
M	S1606E	20	7'-4"	1'-4"	EXP JT TIE	153
N	S1607E	6	7'-9"	1'-9"	EXP JT TIE	48
P	S1608E	-----	8'-2"	2'-2"	EXP JT TIE	-----
Q	S1609E	38	8'-7"	4'-0"	RAIL DOWEL	341
Q	-----	-----	-----	-----	F-RAILDOWEL	-----

Dimensions and quantities

DIMENSIONS			
SPREAD FOOTING			
b	2'-6"	e	1'-0"
c	1'-5"	f	4' 2-1/8"
d	7'-0"	g	2' 8-5/16"

STEM			
a	2' 0-1/2"		
j	1' 7-7/8"		

QUANTITIES		
STRUCTURAL CONCRETE (1A43)		
(FOOTING)		
SPREAD	12.8	cu.yd.
STRUCTURAL CONCRETE (3Y43)		
(STEM)		
	26.0	cu.yd.
REINFORCEMENT (PLAIN)		
SPREAD	1229	lb
REINFORCEMENT (EPOXY)		
Subtotal w/o Rail	2215	lb
Subtotal Rail Only	341	lb
TOTAL	2556	lb

STEM HEIGHT:	AT HIGH END= 13'-0"	AT LOW END = 13'-0"
2-ft L.L. SURCHARGE	Panel: B1	PANEL LENGTH = 30'-6"

Bar	Mark	No.	Length	A	Location	Weight
SPREAD FOOTING REINFORCEMENT						
A	F1601	14	32'-11"	STR.	LONG T & B	481
B	F2502	31	6'-6"	STR.	TRANS BOT	538
C	F1603	31	6'-6"	STR.	TRANS TOP	210
FOOTING DOWELS & STEM REINFORCEMENT						
D	F1604E	31	3'-0"	STR.	DOWEL FF	97
E	F1605E	31	7'-10"	0'-10"	DOWEL BF	253
F	F1606E	30	8'-3"	7'-3"	DOWEL BF	258
G	S1301E	31	10'-3"	STR.	VERT FF	212
H	S1602E	31	10'-3"	STR.	VERT BF	331
J	S 03E	-----	-----	STR.	VERT BF	-----
K	S1604E	31	10'-7"	4'-9"	TIE	342
L	S1305E	26	30'-0"	STR.	HORIZ EF	521
M	S1606E	20	7'-4"	1'-4"	EXP JT TIE	153
N	S1607E	6	7'-9"	1'-9"	EXP JT TIE	48
P	S1608E	-----	8'-2"	2'-2"	EXP JT TIE	-----
Q	S1609E	38	8'-7"	4'-0"	RAIL DOWEL	341
Q	-----	-----	-----	-----	F-RAILDOWEL	-----

Dimensions and quantities

DIMENSIONS			
SPREAD FOOTING			
b	2'-6"	e	1'-0"
c	1'-5"	f	4' 2-1/8"
d	7'-0"	g	2' 8-5/16"

STEM			
a	2' 0-1/2"		
j	1' 7-7/8"		

QUANTITIES		
STRUCTURAL CONCRETE (1A43)		
(FOOTING)		
SPREAD	12.8	cu.yd.
STRUCTURAL CONCRETE (3Y43)		
(STEM)		
	26.0	cu.yd.
REINFORCEMENT (PLAIN)		
SPREAD	1229	lb
REINFORCEMENT (EPOXY)		
Subtotal w/o Rail	2215	lb
Subtotal Rail Only	341	lb
TOTAL	2556	lb

PLOTTED/REVISED: 11-JUN-2012 12:15
DISTRICT #: METRO
IPLOT NAME: d1901148_rw18
PATH & FILENAME: Projects/DM_ROS/013/1901/148/Design/Walls/RW1/d1901148_rw1.dgn

S.P. 179-020-031 S.P. 019-605-028

RETW1 PANEL TABULATIONS

DRAWN BY: GJ | CHECKED BY: HS | CERTIFIED BY _____ LICENSED PROFESSIONAL ENGINEER | LIC. NO. 18520 DATE 6/18/12

STEM HEIGHT:	AT HIGH END= 13'-0"	AT LOW END = 12'-0"
2-ft L.L. SURCHARGE	Panel: B2	PANEL LENGTH = 30'-6"

Bar	Mark	No.	Length	A	Location	Weight
SPREAD FOOTING REINFORCEMENT						
A	F1601	14	32'-11"	STR.	LONG T & B	481
B	F2502	31	6'-6"	STR.	TRANS BOT	538
C	F1603	31	6'-6"	STR.	TRANS TOP	210
FOOTING DOWELS & STEM REINFORCEMENT						
D	F1604E	31	3'-0"	STR.	DOWEL FF	97
E	F1605E	31	7'-10"	0'-10"	DOWEL BF	253
F	F1606E	30	8'-3"	7'-3"	DOWEL BF	258
G	S1301E	31	10'-3"	STR.	VERT FF	212
H	S1602E	31	10'-3"	STR.	VERT BF	331
J	S 03E	-----	-----	STR.	VERT BF	-----
K	S1604E	31	10'-7"	4'-9"	TIE	342
L	S1305E	26	30'-0"	STR.	HORIZ EF	521
M	S1606E	20	7'-4"	1'-4"	EXP JT TIE	153
N	S1607E	6	7'-9"	1'-9"	EXP JT TIE	48
P	S1608E	-----	8'-2"	2'-2"	EXP JT TIE	-----
Q	S1609E	38	8'-7"	4'-0"	RAIL DOWEL	341
Q	-----	-----	-----	-----	F-RAILDOWEL	-----

Dimensions and quantities			
DIMENSIONS			
SPREAD FOOTING			
b	2'-6"	e	1'-0"
c	1'-5"	f	4' 2-1/8"
d	7'-0"	g	2' 8- 5/16"
STEM			
a	2' 0-1/2"		
j	1' 7-7/8"		
QUANTITIES			
STRUCTURAL CONCRETE (1A43) (FOOTING)			
SPREAD	12.8 cu.yd.		
STRUCTURAL CONCRETE (3Y43) (STEM)			
	25.0 cu.yd.		
REINFORCEMENT (PLAIN)			
SPREAD	1229 lb		
REINFORCEMENT (EPOXY)			
Subtotal w/o Rail	2215 lb		
Subtotal Rail Only	341 lb		
TOTAL	2556 lb		

STEM HEIGHT:	AT HIGH END= 12'-0"	AT LOW END = 12'-0"
2-ft L.L. SURCHARGE	Panel: B3	PANEL LENGTH = 30'-6"

Bar	Mark	No.	Length	A	Location	Weight
SPREAD FOOTING REINFORCEMENT						
A	F1601	14	32'-11"	STR.	LONG T & B	481
B	F2202	31	6'-3"	STR.	TRANS BOT	396
C	F1603	31	6'-3"	STR.	TRANS TOP	202
FOOTING DOWELS & STEM REINFORCEMENT						
D	F1604E	31	3'-0"	STR.	DOWEL FF	97
E	F1605E	31	6'-10"	0'-10"	DOWEL BF	221
F	F1606E	30	7'-3"	6'-3"	DOWEL BF	227
G	S1301E	31	9'-3"	STR.	VERT FF	192
H	S1602E	31	9'-3"	STR.	VERT BF	299
J	S 03E	-----	-----	STR.	VERT BF	-----
K	S1604E	31	10'-7"	4'-9"	TIE	342
L	S1305E	24	30'-0"	STR.	HORIZ EF	481
M	S1606E	20	7'-4"	1'-4"	EXP JT TIE	153
N	S1607E	4	7'-9"	1'-9"	EXP JT TIE	32
P	S1608E	-----	8'-2"	2'-2"	EXP JT TIE	-----
Q	S1609E	38	8'-7"	4'-0"	RAIL DOWEL	341
Q	-----	-----	-----	-----	F-RAILDOWEL	-----

Dimensions and quantities			
DIMENSIONS			
SPREAD FOOTING			
b	2'-3"	e	1'-0"
c	1'-5"	f	3' 10-5/8"
d	6'-9"	g	2' 5- 5/16"
STEM			
a	2'-0"		
j	1' 7-3/8"		
QUANTITIES			
STRUCTURAL CONCRETE (1A43) (FOOTING)			
SPREAD	12.3 cu.yd.		
STRUCTURAL CONCRETE (3Y43) (STEM)			
	23.7 cu.yd.		
REINFORCEMENT (PLAIN)			
SPREAD	1079 lb		
REINFORCEMENT (EPOXY)			
Subtotal w/o Rail	2044 lb		
Subtotal Rail Only	341 lb		
TOTAL	2385 lb		

STEM HEIGHT:	AT HIGH END= 12'-0"	AT LOW END = 12'-0"
2-ft L.L. SURCHARGE	Panel: B4	PANEL LENGTH = 30'-6"

Bar	Mark	No.	Length	A	Location	Weight
SPREAD FOOTING REINFORCEMENT						
A	F1601	14	32'-11"	STR.	LONG T & B	481
B	F2202	31	6'-3"	STR.	TRANS BOT	396
C	F1603	31	6'-3"	STR.	TRANS TOP	202
FOOTING DOWELS & STEM REINFORCEMENT						
D	F1604E	31	3'-0"	STR.	DOWEL FF	97
E	F1605E	31	6'-10"	0'-10"	DOWEL BF	221
F	F1606E	30	7'-3"	6'-3"	DOWEL BF	227
G	S1301E	31	9'-3"	STR.	VERT FF	192
H	S1602E	31	9'-3"	STR.	VERT BF	299
J	S 03E	-----	-----	STR.	VERT BF	-----
K	S1604E	31	10'-7"	4'-9"	TIE	342
L	S1305E	24	30'-0"	STR.	HORIZ EF	481
M	S1606E	20	7'-4"	1'-4"	EXP JT TIE	153
N	S1607E	4	7'-9"	1'-9"	EXP JT TIE	32
P	S1608E	-----	8'-2"	2'-2"	EXP JT TIE	-----
Q	S1609E	38	8'-7"	4'-0"	RAIL DOWEL	341
Q	-----	-----	-----	-----	F-RAILDOWEL	-----

Dimensions and quantities			
DIMENSIONS			
SPREAD FOOTING			
b	2'-3"	e	1'-0"
c	1'-5"	f	3' 10-5/8"
d	6'-9"	g	2' 5- 5/16"
STEM			
a	2'-0"		
j	1' 7-3/8"		
QUANTITIES			
STRUCTURAL CONCRETE (1A43) (FOOTING)			
SPREAD	12.3 cu.yd.		
STRUCTURAL CONCRETE (3Y43) (STEM)			
	23.7 cu.yd.		
REINFORCEMENT (PLAIN)			
SPREAD	1079 lb		
REINFORCEMENT (EPOXY)			
Subtotal w/o Rail	2044 lb		
Subtotal Rail Only	341 lb		
TOTAL	2385 lb		

STEM HEIGHT:	AT HIGH END= 12'-0"	AT LOW END = 11'-0"
2-ft L.L. SURCHARGE	Panel: B5	PANEL LENGTH = 30'-6"

Bar	Mark	No.	Length	A	Location	Weight
SPREAD FOOTING REINFORCEMENT						
A	F1601	14	32'-11"	STR.	LONG T & B	481
B	F2202	31	6'-3"	STR.	TRANS BOT	396
C	F1603	31	6'-3"	STR.	TRANS TOP	202
FOOTING DOWELS & STEM REINFORCEMENT						
D	F1604E	31	3'-0"	STR.	DOWEL FF	97
E	F1605E	31	6'-10"	0'-10"	DOWEL BF	221
F	F1606E	30	7'-3"	6'-3"	DOWEL BF	227
G	S1301E	31	9'-3"	STR.	VERT FF	192
H	S1602E	31	9'-3"	STR.	VERT BF	299
J	S 03E	-----	-----	STR.	VERT BF	-----
K	S1604E	31	10'-7"	4'-9"	TIE	342
L	S1305E	24	30'-0"	STR.	HORIZ EF	481
M	S1606E	20	7'-4"	1'-4"	EXP JT TIE	153
N	S1607E	4	7'-9"	1'-9"	EXP JT TIE	32
P	S1608E	-----	8'-2"	2'-2"	EXP JT TIE	-----
Q	S1609E	38	8'-7"	4'-0"	RAIL DOWEL	341
Q	-----	-----	-----	-----	F-RAILDOWEL	-----

Dimensions and quantities			
DIMENSIONS			
SPREAD FOOTING			
b	2'-3"	e	1'-0"
c	1'-5"	f	3' 10-5/8"
d	6'-9"	g	2' 5- 5/16"
STEM			
a	2'-0"		
j	1' 7-3/8"		
QUANTITIES			
STRUCTURAL CONCRETE (1A43) (FOOTING)			
SPREAD	12.3 cu.yd.		
STRUCTURAL CONCRETE (3Y43) (STEM)			
	22.7 cu.yd.		
REINFORCEMENT (PLAIN)			
SPREAD	1079 lb		
REINFORCEMENT (EPOXY)			
Subtotal w/o Rail	2044 lb		
Subtotal Rail Only	341 lb		
TOTAL	2385 lb		

PLOTTED/REVISED: 11-JUN-2012 12:15
DISTRICT #: METRO
IPLOT NAME: d1901148_rw17
PATH & FILENAME: Projects/DM_ROS/013/1901/148/Design/Walls/RW1/d1901148_rw1.dgn

S.P. 179-020-031 S.P. 019-605-028

RETW1 PANEL TABULATIONS

DRAWN BY: GJ | CHECKED BY: HS | CERTIFIED BY _____ LICENSED PROFESSIONAL ENGINEER | LIC. NO. 18520 DATE 6/18/12

STEM HEIGHT:	AT HIGH END= 11'-0"	AT LOW END = 11'-0"
2-ft L.L. SURCHARGE	Panel: B6	PANEL LENGTH = 30'-6"

Bar	Mark	No.	Length	A	Location	Weight
SPREAD FOOTING REINFORCEMENT						
A	F1601	14	32'-11"	STR.	LONG T & B	481
B	F1902	31	6'-0"	STR.	TRANS BOT	279
C	F1603	31	6'-0"	STR.	TRANS TOP	194
FOOTING DOWELS & STEM REINFORCEMENT						
D	F1604E	31	3'-0"	STR.	DOWEL FF	97
E	F1605E	31	5'-7"	0'-10"	DOWEL BF	181
F	F1606E	30	5'-9"	4'-9"	DOWEL BF	180
G	S1301E	31	8'-3"	STR.	VERT FF	171
H	S1602E	31	8'-3"	STR.	VERT BF	267
J	S 03E	-----	-----	STR.	VERT BF	-----
K	S1604E	31	10'-7"	4'-9"	TIE	342
L	S1305E	22	30'-0"	STR.	HORIZ EF	441
M	S1606E	20	7'-4"	1'-4"	EXP JT TIE	153
N	S1607E	2	7'-9"	1'-9"	EXP JT TIE	16
P	S1608E	-----	8'-2"	2'-2"	EXP JT TIE	-----
Q	S1609E	38	8'-7"	4'-0"	RAIL DOWEL	341
Q	-----	-----	-----	-----	F-RAILDOWEL	-----

Dimensions and quantities			
DIMENSIONS			
SPREAD FOOTING			
b	2'-0"	e	-----
c	1'-5"	f	-----
d	6'-6"	g	2' 2- 5/16"
STEM			
a	1' 11-1/2"		
j	1' 6-7/8"		
QUANTITIES			
STRUCTURAL CONCRETE (1A43) (FOOTING)			
SPREAD	10.8	cu.yd.	
STRUCTURAL CONCRETE (3Y43) (STEM)			
	21.5	cu.yd.	
REINFORCEMENT (PLAIN)			
SPREAD	954	lb	
REINFORCEMENT (EPOXY)			
Subtotal w/o Rail	1848 lb		
Subtotal Rail Only	341 lb		
TOTAL	2189 lb		

STEM HEIGHT:	AT HIGH END= 11'-0"	AT LOW END = 8'-0"
2-ft L.L. SURCHARGE	Panel: B7	PANEL LENGTH = 30'-6"

Bar	Mark	No.	Length	A	Location	Weight
SPREAD FOOTING REINFORCEMENT						
A	F1601	14	32'-11"	STR.	LONG T & B	481
B	F1902	31	6'-0"	STR.	TRANS BOT	279
C	F1603	31	6'-0"	STR.	TRANS TOP	194
FOOTING DOWELS & STEM REINFORCEMENT						
D	F1604E	31	3'-0"	STR.	DOWEL FF	97
E	F1605E	31	5'-7"	0'-10"	DOWEL BF	181
F	F1606E	30	5'-9"	4'-9"	DOWEL BF	180
G	S1301E	31	7'-6"	STR.	VERT FF	155
H	S1602E	31	8'-3"	STR.	VERT BF	267
J	S 03E	-----	-----	STR.	VERT BF	-----
K	S1604E	31	10'-7"	4'-9"	TIE	342
L	S1305E	22	30'-0"	STR.	HORIZ EF	441
M	S1606E	20	7'-4"	1'-4"	EXP JT TIE	153
N	S1607E	2	7'-9"	1'-9"	EXP JT TIE	16
P	S1608E	-----	8'-2"	2'-2"	EXP JT TIE	-----
Q	S1609E	38	8'-7"	4'-0"	RAIL DOWEL	341
Q	-----	-----	-----	-----	F-RAILDOWEL	-----

Dimensions and quantities			
DIMENSIONS			
SPREAD FOOTING			
b	2'-0"	e	-----
c	1'-5"	f	-----
d	6'-6"	g	2' 2- 5/16"
STEM			
a	1' 11-1/2"		
j	1' 6-7/8"		
QUANTITIES			
STRUCTURAL CONCRETE (1A43) (FOOTING)			
SPREAD	10.8	cu.yd.	
STRUCTURAL CONCRETE (3Y43) (STEM)			
	18.6	cu.yd.	
REINFORCEMENT (PLAIN)			
SPREAD	954	lb	
REINFORCEMENT (EPOXY)			
Subtotal w/o Rail	1832 lb		
Subtotal Rail Only	341 lb		
TOTAL	2173 lb		

STEM HEIGHT:	AT HIGH END= 8'-0"	AT LOW END = 7'-0"
2-ft L.L. SURCHARGE	Panel: B8	PANEL LENGTH = 30'-6"

Bar	Mark	No.	Length	A	Location	Weight
SPREAD FOOTING REINFORCEMENT						
A	F1601	10	32'-11"	STR.	LONG T & B	343
B	F1602	31	4'-6"	STR.	TRANS BOT	145
C	F1603	31	4'-6"	STR.	TRANS TOP	145
FOOTING DOWELS & STEM REINFORCEMENT						
D	F1604E	31	3'-0"	STR.	DOWEL FF	97
E	F1605E	16	4'-1"	0'-10"	DOWEL BF	68
F	F1606E	15	4'-3"	3'-3"	DOWEL BF	66
G	S1301E	31	6'-6"	STR.	VERT FF	135
H	S1602E	31	7'-0"	STR.	VERT BF	226
J	S 03E	-----	-----	STR.	VERT BF	-----
K	S1604E	31	7'-1"	3'-0"	TIE	229
L	S1305E	16	30'-0"	STR.	HORIZ EF	321
M	S1606E	16	7'-4"	1'-4"	EXP JT TIE	122
N	S1607E	-----	7'-9"	1'-9"	EXP JT TIE	-----
P	S1608E	-----	8'-2"	2'-2"	EXP JT TIE	-----
Q	S1609E	38	8'-7"	4'-0"	RAIL DOWEL	341
Q	-----	-----	-----	-----	F-RAILDOWEL	-----

Dimensions and quantities			
DIMENSIONS			
SPREAD FOOTING			
b	1'-6"	e	-----
c	1'-5"	f	-----
d	5'-0"	g	1' 8- 5/16"
STEM			
a	1'-10"		
j	1' 5-3/8"		
QUANTITIES			
STRUCTURAL CONCRETE (1A43) (FOOTING)			
SPREAD	8.3	cu.yd.	
STRUCTURAL CONCRETE (3Y43) (STEM)			
	14.1	cu.yd.	
REINFORCEMENT (PLAIN)			
SPREAD	633	lb	
REINFORCEMENT (EPOXY)			
Subtotal w/o Rail	1264 lb		
Subtotal Rail Only	341 lb		
TOTAL	1605 lb		

STEM HEIGHT:	AT HIGH END= 7'-0"	AT LOW END = 7'-0"
2-ft L.L. SURCHARGE	Panel: B9	PANEL LENGTH = 30'-6"

Bar	Mark	No.	Length	A	Location	Weight
SPREAD FOOTING REINFORCEMENT						
A	F1601	10	32'-11"	STR.	LONG T & B	343
B	F1602	31	4'-0"	STR.	TRANS BOT	129
C	F1603	31	4'-0"	STR.	TRANS TOP	129
FOOTING DOWELS & STEM REINFORCEMENT						
D	F1604E	31	3'-0"	STR.	DOWEL FF	97
E	F1605E	16	4'-1"	0'-10"	DOWEL BF	68
F	F1606E	15	4'-3"	3'-3"	DOWEL BF	66
G	S1301E	31	6'-0"	STR.	VERT FF	124
H	S1602E	31	6'-0"	STR.	VERT BF	194
J	S 03E	-----	-----	STR.	VERT BF	-----
K	S1604E	31	7'-1"	3'-0"	TIE	229
L	S1305E	14	30'-0"	STR.	HORIZ EF	281
M	S1606E	14	7'-4"	1'-4"	EXP JT TIE	107
N	S1607E	-----	7'-9"	1'-9"	EXP JT TIE	-----
P	S1608E	-----	8'-2"	2'-2"	EXP JT TIE	-----
Q	S1609E	38	8'-7"	4'-0"	RAIL DOWEL	341
Q	-----	-----	-----	-----	F-RAILDOWEL	-----

Dimensions and quantities			
DIMENSIONS			
SPREAD FOOTING			
b	1'-4"	e	-----
c	1'-5"	f	-----
d	4'-6"	g	1' 6- 5/16"
STEM			
a	1' 9-1/2"		
j	1' 4-7/8"		
QUANTITIES			
STRUCTURAL CONCRETE (1A43) (FOOTING)			
SPREAD	7.4	cu.yd.	
STRUCTURAL CONCRETE (3Y43) (STEM)			
	13.0	cu.yd.	
REINFORCEMENT (PLAIN)			
SPREAD	601	lb	
REINFORCEMENT (EPOXY)			
Subtotal w/o Rail	1166 lb		
Subtotal Rail Only	341 lb		
TOTAL	1507 lb		

PLOTTED/REVISED: 12-JUN-2012 14:07
DISTRICT #: METRO
IPLOT NAME: d1901148_rwl
PATH & FILENAME: Projects/DM_ROS/013/1901/148/Design/Walls/RWI/d1901148_rwl.dgn

S.P. 179-020-031 S.P. 019-605-028

RETW1 PANEL TABULATIONS

DRAWN BY: GJ | CHECKED BY: HS | CERTIFIED BY _____ LICENSED PROFESSIONAL ENGINEER | LIC. NO. 18520 DATE 6/18/12

STEM HEIGHT:	AT HIGH END= 7'-0"	AT LOW END = 5'-0"
2-ft L.L. SURCHARGE	Panel: B9	PANEL LENGTH = 30'-6"

Bar	Mark	No.	Length	A	Location	Weight
SPREAD FOOTING REINFORCEMENT						
A	F1601	10	32'-11"	STR.	LONG T & B	343
B	F1602	31	4'-0"	STR.	TRANS BOT	129
C	F1603	31	4'-0"	STR.	TRANS TOP	129
FOOTING DOWELS & STEM REINFORCEMENT						
D	F1604E	31	3'-0"	STR.	DOWEL FF	97
E	F1605E	16	4'-1"	0'-10"	DOWEL BF	68
F	F1606E	15	4'-3"	3'-3"	DOWEL BF	66
G	S1301E	31	4'-6"	STR.	VERT FF	93
H	S1602E	31	6'-0"	STR.	VERT BF	194
J	S 03E	-----	-----	STR.	VERT BF	-----
K	S1604E	31	7'-1"	3'-0"	TIE	229
L	S1305E	14	30'-0"	STR.	HORIZ EF	281
M	S1606E	14	7'-4"	1'-4"	EXP JT TIE	107
N	S1607E	-----	7'-9"	1'-9"	EXP JT TIE	-----
P	S1608E	-----	8'-2"	2'-2"	EXP JT TIE	-----
Q	S1609E	38	8'-7"	4'-0"	RAIL DOWEL	341
Q	-----	-----	-----	-----	F-RAILDOWEL	-----

Dimensions and quantities			
DIMENSIONS			
SPREAD FOOTING			
b	1'-4"	e	-----
c	1'-5"	f	-----
d	4'-6"	g	1' 6- 5/16"
STEM			
a	1' 9-1/2"		
j	1' 4-7/8"		

QUANTITIES		
STRUCTURAL CONCRETE (1A43)		
(FOOTING)		
SPREAD	7.4	cu.yd.
STRUCTURAL CONCRETE (3Y43)		
(STEM)		
	11.2	cu.yd.
REINFORCEMENT (PLAIN)		
SPREAD	601	lb
REINFORCEMENT (EPOXY)		
Subtotal w/o Rail	1135	lb
Subtotal Rail Only	341	lb
TOTAL	1476	lb

S.P. 179-020-031 S.P. 019-605-028

SHEET 12 OF 12

RETW1 PANEL TABULATIONS

DRAWN BY: GJ | CHECKED BY: HS | CERTIFIED BY _____ LICENSED PROFESSIONAL ENGINEER LIC. NO. 18520 DATE 6/18/12

STATE PROJ. NO. 1901-148 (T.H. 13) SHEET NO. 280 OF 442 SHEETS

DISTRICT #: METRO
IPLOT NAME: d1901148_rw1
PATH & FILENAME: Projects/DM_ROS/013/1901/148/Design/Walls/RW1/d1901148_rw1.dgn
PLOTTED/REVISED: 12-JUN-2012 14:08

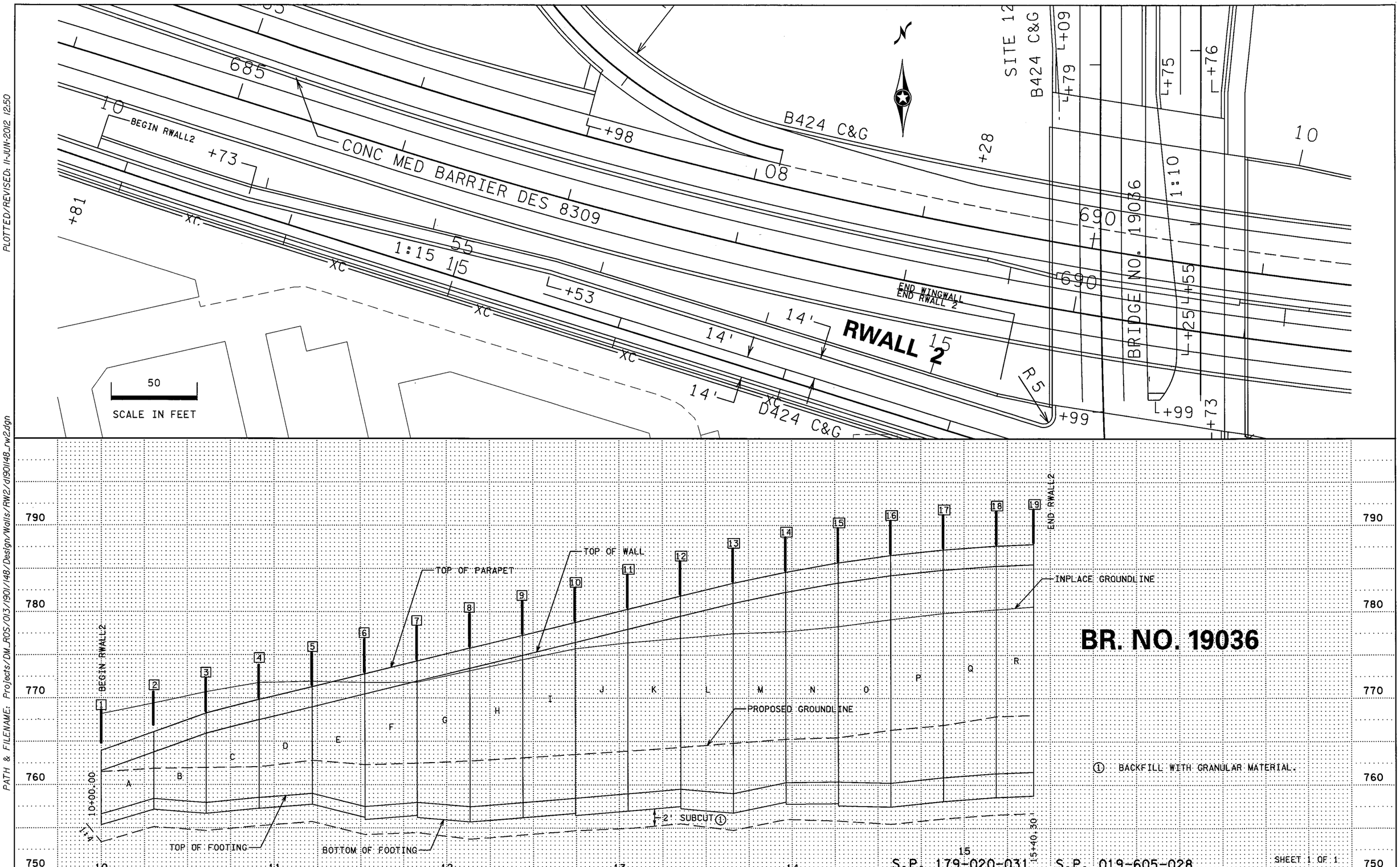

DISTRICT #: METRO
IPLOT NAME: d190148_rw2
PATH & FILENAME: Projects/DM_ROS/013/1901/148/Design/Walls/RW2/d190148_rw2.dgn

PLOTTED/REVISED: 11-JUN-2012 12:50

RWALL2 PLAN AND PROFILE

DRAWN BY: GJ	CHECKED BY: HS	CERTIFIED BY _____ LICENSED PROFESSIONAL ENGINEER	LIC. NO. 18520 DATE 6/18/12

STATE PROJ. NO. 1901-148 (T.H. 13) SHEET NO. 281 OF 442 SHEETS

RETAINING WALL RETW2

LIVE LOAD SURCHARGE - SPECIAL DESIGN

JOINT NO.	STATION	X	Y	PROPOSED GROUND LINE	TOP OF WALL	TOP OF FOOTING HEEL	BOTTOM OF FOOTING	WALL HEIGHT	PANEL LENGTH	PANEL NAME
1	10+00.00	502453.127	209794.677	761.370	761.600	756.600	755.350	5.000		
2	10+30.50	502482.048	209784.989	761.970	763.780	758.380	757.130	5.400	30.50	A
3	10+61.00	502511.070	209775.612	762.440	765.920	757.920	756.670	8.000	30.50	B
4	10+91.50	502540.183	209766.518	762.820	767.490	758.490	757.240	9.000	30.50	C
5	11+22.00	502569.843	209759.409	762.820	768.980	758.980	757.730	10.000	30.50	D
6	11+52.50	502599.503	209752.300	760.840	770.470	757.470	756.220	13.000	30.50	E
7	11+83.00	502629.162	209745.191	761.160	771.940	757.940	756.440	14.000	30.50	F
8	12+13.50	502658.822	209738.081	761.480	773.450	757.450	755.700	16.000	30.50	G
9	12+44.00	502688.482	209730.972	761.760	774.940	757.940	756.190	17.000	30.50	H
10	12+74.50	502718.142	209723.863	761.940	776.440	758.440	756.690	18.000	30.50	I
11	13+05.00	502747.321	209714.984	762.190	777.960	758.960	756.960	19.000	30.50	J
12	13+35.50	502776.499	209706.102	762.420	779.500	759.500	757.500	20.000	30.50	K
13	13+66.00	502805.677	209697.219	762.660	780.990	758.990	756.740	22.000	30.50	L
14	13+96.50	502834.855	209688.337	762.890	782.280	760.280	758.030	22.000	30.50	M
15	14+27.00	502864.033	209679.454	763.130	783.350	760.350	757.850	23.000	30.50	N
16	14+57.50	502893.211	209670.572	763.390	784.220	760.220	757.470	24.000	30.50	O
17	14+88.00	502922.389	209661.689	763.660	784.870	760.870	758.120	24.000	30.50	P
18	15+18.50	502951.566	209652.807	763.940	785.310	761.310	758.560	24.000	30.50	Q
19	15+40.30	502972.409	209723.849	764.130	785.490	761.490	758.740	24.000	21.80	R

SUMMARY OF QUANTITIES FOR RETAINING WALL RETW2

(STANDARD MN/DOT CANTILEVER DESIGN)

PANEL	STRUCTURAL CONCRETE		REINFORCEMENT BARS			TYPE P-1(TL-2) RAILING CONCRETE (3Y46)②	ARCHITECTURAL CONCRETE TEXTURE (RANDOM BATTEN)	ARCHITECTURAL SURFACE FINISH (SINGLE COLOR)
	1A43 (FOOTING)	3Y43 (STEM)	PLAIN (WALL)	EPOXY (WALL)	EPOXY① (PARAPET)			
	CU YD	CU YD	LB	LB	LB	LIN FT	SQ FT	SQ FT
A	6.6	9.5	501	1348	341	30.5	30.7	336.2
B	8.3	12.6	633	1571	341	30.5	89.2	381.9
C	9.1	16.2	736	1722	341	30.5	143.2	437.1
D	9.9	18.3	768	2030	341	30.5	176.8	467.6
E	12.8	23.0	1229	2541	341	30.5	218.2	528.6
F	14.5	27.3	1235	2739	341	30.5	268.9	589.6
G	18.8	31.1	1262	3419	341	30.5	307.8	635.4
H	19.8	34.6	1495	3664	341	30.5	343.6	681.1
I	20.8	37.1	1541	4273	341	30.5	377.7	711.6
J	24.7	39.6	1655	4570	341	30.5	411.6	742.1
K	26.7	42.2	1872	5282	341	30.5	455.5	772.6
L	32.4	46.5	2621	6015	341	30.5	478.1	818.4
M	32.4	48.7	2621	6015	341	30.5	506.0	848.9
N	37.2	50.3	2587	6976	341	30.5	531.8	864.1
O	42.6	53.1	2868	7464	341	30.5	545.3	894.6
P	42.6	54.2	2868	7464	341	30.5	546.6	909.9
Q	42.6	54.2	2868	7464	341	30.5	539.2	909.9
R	30.4	38.8	2074	6199	341	21.8	379.4	649.9
TOTALS	432.2	627.8	31434.0	80756.0	6138.0	540.3	6349.6	12179.5

① CONSISTS OF PARAPET BARRIER DOWEL BAR IDENTIFIED AS THE Q BAR. FOR DETAILS, SEE SHEET NO. 336.

② FOR DETAILS, SEE SHEET NO. 342.

S.P. 179-020-031 S.P. 019-605-028

SHEET 1 OF 1

RWALL2 TABULATIONS

DRAWN BY: GJ | CHECKED BY: HS | CERTIFIED BY _____ (LICENSED PROFESSIONAL ENGINEER) LIC. NO. 18520 DATE 3/14/11

STATE PROJ. NO. 1901-148 (T.H. 13) SHEET NO. 282 OF 442 SHEETS

DISTRICT #: METRO
IPLOT NAME: d1901148_rw2
PATH & FILENAME: Projects/DM_ROS/013/1901/148/Design/Walls/RW2/d1901148_rw2.dgn
PLOTTED/REVISED: 12-JUN-2012 14:11

STEM HEIGHT:	AT HIGH END= 5' 4-13/16"	AT LOW END = 5'-0"
2-ft L.L. SURCHARGE	Panel: A	PANEL LENGTH = 30'-6"

Bar	Mark	No.	Length	A	Location	Weight
SPREAD FOOTING REINFORCEMENT						
A	F1601	8	32'-11"	STR.	LONG T & B	275
B	F1602	31	3'-6"	STR.	TRANS BOT	113
C	F1603	31	3'-6"	STR.	TRANS TOP	113
FOOTING DOWELS & STEM REINFORCEMENT						
D	F1604E	31	3'-0"	STR.	DOWEL FF	97
E	F1605E	16	4'-1"	0'-10"	DOWEL BF	68
F	F1606E	15	4'-3"	3'-3"	DOWEL BF	66
G	S1301E	31	4'-6"	STR.	VERT FF	93
H	S1602E	31	5'-0"	STR.	VERT BF	162
J	S 03E	-----	-----	STR.	VERT BF	-----
K	S1604E	31	7'-1"	3'-0"	TIE	229
L	S1305E	10	30'-0"	STR.	HORIZ EF	200
M	S1606E	12	7'-4"	1'-4"	EXP JT TIE	92
N	S1607E	-----	7'-9"	1'-9"	EXP JT TIE	-----
P	S1608E	-----	8'-2"	2'-2"	EXP JT TIE	-----
Q	S1609E	38	8'-7"	4'-0"	RAIL DOWEL	341
Q	-----	-----	-----	-----	F-RAILDOWEL	-----

DIMENSIONS			
SPREAD FOOTING			
b	1'-2"	e	-----
c	1'-5"	f	-----
d	4'-0"	g	1' 4- 5/16"

STEM			
a	1'-9"		
j	1' 4-3/8"		

QUANTITIES		
STRUCTURAL CONCRETE (1A43)		
(FOOTING)		
SPREAD	6.6	cu.yd.
STRUCTURAL CONCRETE (3Y43)		
(STEM)		
	9.5	cu.yd.
REINFORCEMENT (PLAIN)		
SPREAD	501	lb
REINFORCEMENT (EPOXY)		
Subtotal w/o Rail	1007	lb
Subtotal Rail Only	341	lb
TOTAL	1348	lb

STEM HEIGHT:	AT HIGH END= 8'-0"	AT LOW END = 5' 4-13/16"
2-ft L.L. SURCHARGE	Panel: B	PANEL LENGTH = 30'-6"

Bar	Mark	No.	Length	A	Location	Weight
SPREAD FOOTING REINFORCEMENT						
A	F1601	10	32'-11"	STR.	LONG T & B	343
B	F1602	31	4'-6"	STR.	TRANS BOT	145
C	F1603	31	4'-6"	STR.	TRANS TOP	145
FOOTING DOWELS & STEM REINFORCEMENT						
D	F1604E	31	3'-0"	STR.	DOWEL FF	97
E	F1605E	16	4'-1"	0'-10"	DOWEL BF	68
F	F1606E	15	4'-3"	3'-3"	DOWEL BF	66
G	S1301E	31	4'-11"	STR.	VERT FF	101
H	S1602E	31	7'-0"	STR.	VERT BF	226
J	S 03E	-----	-----	STR.	VERT BF	-----
K	S1604E	31	7'-1"	3'-0"	TIE	229
L	S1305E	16	30'-0"	STR.	HORIZ EF	321
M	S1606E	16	7'-4"	1'-4"	EXP JT TIE	122
N	S1607E	-----	7'-9"	1'-9"	EXP JT TIE	-----
P	S1608E	-----	8'-2"	2'-2"	EXP JT TIE	-----
Q	S1609E	38	8'-7"	4'-0"	RAIL DOWEL	341
Q	-----	-----	-----	-----	F-RAILDOWEL	-----

DIMENSIONS			
SPREAD FOOTING			
b	1'-6"	e	-----
c	1'-5"	f	-----
d	5'-0"	g	1' 8- 5/16"

STEM			
a	1'-10"		
j	1' 5-3/8"		

QUANTITIES		
STRUCTURAL CONCRETE (1A43)		
(FOOTING)		
SPREAD	8.3	cu.yd.
STRUCTURAL CONCRETE (3Y43)		
(STEM)		
	12.6	cu.yd.
REINFORCEMENT (PLAIN)		
SPREAD	633	lb
REINFORCEMENT (EPOXY)		
Subtotal w/o Rail	1230	lb
Subtotal Rail Only	341	lb
TOTAL	1571	lb

STEM HEIGHT:	AT HIGH END= 9'-0"	AT LOW END = 8'-0"
2-ft L.L. SURCHARGE	Panel: C	PANEL LENGTH = 30'-6"

Bar	Mark	No.	Length	A	Location	Weight
SPREAD FOOTING REINFORCEMENT						
A	F1601	12	32'-11"	STR.	LONG T & B	412
B	F1602	31	5'-0"	STR.	TRANS BOT	162
C	F1603	31	5'-0"	STR.	TRANS TOP	162
FOOTING DOWELS & STEM REINFORCEMENT						
D	F1604E	31	3'-0"	STR.	DOWEL FF	97
E	F1605E	16	4'-4"	0'-10"	DOWEL BF	72
F	F1606E	15	4'-6"	3'-6"	DOWEL BF	70
G	S1301E	31	7'-6"	STR.	VERT FF	155
H	S1602E	31	8'-0"	STR.	VERT BF	259
J	S 03E	-----	-----	STR.	VERT BF	-----
K	S1604E	31	7'-1"	3'-0"	TIE	229
L	S1305E	18	30'-0"	STR.	HORIZ EF	361
M	S1606E	18	7'-4"	1'-4"	EXP JT TIE	138
N	S1607E	-----	7'-9"	1'-9"	EXP JT TIE	-----
P	S1608E	-----	8'-2"	2'-2"	EXP JT TIE	-----
Q	S1609E	38	8'-7"	4'-0"	RAIL DOWEL	341
Q	-----	-----	-----	-----	F-RAILDOWEL	-----

DIMENSIONS			
SPREAD FOOTING			
b	1'-8"	e	-----
c	1'-5"	f	-----
d	5'-6"	g	1' 10- 5/16"

STEM			
a	1' 10-1/2"		
j	1' 5-7/8"		

QUANTITIES		
STRUCTURAL CONCRETE (1A43)		
(FOOTING)		
SPREAD	9.1	cu.yd.
STRUCTURAL CONCRETE (3Y43)		
(STEM)		
	16.2	cu.yd.
REINFORCEMENT (PLAIN)		
SPREAD	736	lb
REINFORCEMENT (EPOXY)		
Subtotal w/o Rail	1381	lb
Subtotal Rail Only	341	lb
TOTAL	1722	lb

STEM HEIGHT:	AT HIGH END= 10'-0"	AT LOW END = 9'-0"
2-ft L.L. SURCHARGE	Panel: D	PANEL LENGTH = 30'-6"

Bar	Mark	No.	Length	A	Location	Weight
SPREAD FOOTING REINFORCEMENT						
A	F1601	12	32'-11"	STR.	LONG T & B	412
B	F1602	31	5'-6"	STR.	TRANS BOT	178
C	F1603	31	5'-6"	STR.	TRANS TOP	178
FOOTING DOWELS & STEM REINFORCEMENT						
D	F1604E	31	3'-0"	STR.	DOWEL FF	97
E	F1605E	31	4'-10"	0'-10"	DOWEL BF	156
F	F1606E	30	5'-0"	4'-0"	DOWEL BF	156
G	S1301E	31	7'-3"	STR.	VERT FF	150
H	S1602E	31	7'-3"	STR.	VERT BF	234
J	S 03E	-----	-----	STR.	VERT BF	-----
K	S1604E	31	10'-7"	4'-9"	TIE	342
L	S1305E	20	30'-0"	STR.	HORIZ EF	401
M	S1606E	20	7'-4"	1'-4"	EXP JT TIE	153
N	S1607E	-----	7'-9"	1'-9"	EXP JT TIE	-----
P	S1608E	-----	8'-2"	2'-2"	EXP JT TIE	-----
Q	S1609E	38	8'-7"	4'-0"	RAIL DOWEL	341
Q	-----	-----	-----	-----	F-RAILDOWEL	-----

DIMENSIONS			
SPREAD FOOTING			
b	1'-9"	e	-----
c	1'-5"	f	-----
d	6'-0"	g	1' 11- 5/16"

STEM			
a	1'-11"		
j	1' 6-3/8"		

QUANTITIES		
STRUCTURAL CONCRETE (1A43)		
(FOOTING)		
SPREAD	9.9	cu.yd.
STRUCTURAL CONCRETE (3Y43)		
(STEM)		
	18.3	cu.yd.
REINFORCEMENT (PLAIN)		
SPREAD	768	lb
REINFORCEMENT (EPOXY)		
Subtotal w/o Rail	1689	lb
Subtotal Rail Only	341	lb
TOTAL	2030	lb

PLOTTED/REVISED: 11-JUN-2012 12:50
DISTRICT #: METRO
PLOT NAME: d1901148_rw22
PATH & FILENAME: Projects/DM_ROS/013/1901/148/Design/Walls/RW2/d1901148_rw2.dgn

S.P. 179-020-031 S.P. 019-605-028

SHEET 1 OF 5

RWALL2 PANEL TABULATIONS

DRAWN BY: GJ | CHECKED BY: HS | CERTIFIED BY _____ LICENSED PROFESSIONAL ENGINEER | LIC. NO. 18520 DATE 6/18/12

STATE PROJ. NO. 1901-148 (T.H. 13) SHEET NO. 283 OF 442 SHEETS

STEM HEIGHT:	AT HIGH END= 13'-0"	AT LOW END = 10'-0"
2-ft L.L. SURCHARGE	Panel: E	PANEL LENGTH = 30'-6"

Bar	Mark	No.	Length	A	Location	Weight
SPREAD FOOTING REINFORCEMENT						
A	F1601	14	32'-11"	STR.	LONG T & B	481
B	F2502	31	6'-6"	STR.	TRANS BOT	538
C	F1603	31	6'-6"	STR.	TRANS TOP	210
FOOTING DOWELS & STEM REINFORCEMENT						
D	F1604E	31	3'-0"	STR.	DOWEL FF	97
E	F1605E	31	7'-10"	0'-10"	DOWEL BF	253
F	F1606E	30	8'-3"	7'-3"	DOWEL BF	258
G	S1301E	31	9'-6"	STR.	VERT FF	197
H	S1602E	31	10'-3"	STR.	VERT BF	331
J	S 03E	-----	-----	STR.	VERT BF	-----
K	S1604E	31	10'-7"	4'-9"	TIE	342
L	S1305E	26	30'-0"	STR.	HORIZ EF	521
M	S1606E	20	7'-4"	1'-4"	EXP JT TIE	153
N	S1607E	6	7'-9"	1'-9"	EXP JT TIE	48
P	S1608E	-----	8'-2"	2'-2"	EXP JT TIE	-----
Q	S1609E	38	8'-7"	4'-0"	RAIL DOWEL	341
Q	-----	-----	-----	-----	F-RAILDOWEL	-----

DIMENSIONS

SPREAD FOOTING			
b	2'-6"	e	1'-0"
c	1'-5"	f	4' 2-1/8"
d	7'-0"	g	2' 8- 5/16"

STEM			
a	2' 0-1/2"		
j	1' 7-7/8"		

QUANTITIES

STRUCTURAL CONCRETE (1A43)	
(FOOTING)	
SPREAD	12.8 cu.yd.
STRUCTURAL CONCRETE (3Y43)	
(STEM)	
	23.0 cu.yd.
REINFORCEMENT (PLAIN)	
SPREAD	1229 lb
REINFORCEMENT (EPOXY)	
Subtotal w/o Rail	2200 lb
Subtotal Rail Only	341 lb
TOTAL	2541 lb

STEM HEIGHT:	AT HIGH END= 14'-0"	AT LOW END = 13'-0"
2-ft L.L. SURCHARGE	Panel: F	PANEL LENGTH = 30'-6"

Bar	Mark	No.	Length	A	Location	Weight
SPREAD FOOTING REINFORCEMENT						
A	F1601	16	32'-11"	STR.	LONG T & B	549
B	F2202	31	7'-2"	STR.	TRANS BOT	454
C	F1603	31	7'-2"	STR.	TRANS TOP	232
FOOTING DOWELS & STEM REINFORCEMENT						
D	F1604E	31	3'-0"	STR.	DOWEL FF	97
E	F1605E	31	8'-10"	0'-10"	DOWEL BF	286
F	F1606E	30	9'-6"	8'-6"	DOWEL BF	297
G	S1301E	31	11'-3"	STR.	VERT FF	233
H	S1602E	31	11'-3"	STR.	VERT BF	364
J	S 03E	-----	-----	STR.	VERT BF	-----
K	S1604E	31	10'-7"	4'-9"	TIE	342
L	S1305E	28	30'-0"	STR.	HORIZ EF	561
M	S1606E	20	7'-4"	1'-4"	EXP JT TIE	153
N	S1607E	8	7'-9"	1'-9"	EXP JT TIE	65
P	S1608E	-----	8'-2"	2'-2"	EXP JT TIE	-----
Q	S1609E	38	8'-7"	4'-0"	RAIL DOWEL	341
Q	-----	-----	-----	-----	F-RAILDOWEL	-----

DIMENSIONS

SPREAD FOOTING			
b	2'-9"	e	1'-0"
c	1'-6"	f	4' 5-3/4"
d	7'-8"	g	2' 11- 5/16"

STEM			
a	2'-1"		
j	1' 8-3/8"		

QUANTITIES

STRUCTURAL CONCRETE (1A43)	
(FOOTING)	
SPREAD	14.5 cu.yd.
STRUCTURAL CONCRETE (3Y43)	
(STEM)	
	27.3 cu.yd.
REINFORCEMENT (PLAIN)	
SPREAD	1235 lb
REINFORCEMENT (EPOXY)	
Subtotal w/o Rail	2398 lb
Subtotal Rail Only	341 lb
TOTAL	2739 lb

STEM HEIGHT:	AT HIGH END= 16'-0"	AT LOW END = 14'-0"
2-ft L.L. SURCHARGE	Panel: G	PANEL LENGTH = 30'-6"

Bar	Mark	No.	Length	A	Location	Weight
SPREAD FOOTING REINFORCEMENT						
A	F1601	18	32'-11"	STR.	LONG T & B	618
B	F1902	31	8'-2"	STR.	TRANS BOT	380
C	F1603	31	8'-2"	STR.	TRANS TOP	264
FOOTING DOWELS & STEM REINFORCEMENT						
D	F1604E	31	3'-0"	STR.	DOWEL FF	97
E	F1905E	31	10'-2"	4'-11"	DOWEL BF	473
F	F1906E	30	7'-0"	6'-0"	DOWEL BF	315
G	S1301E	31	13'-3"	STR.	VERT FF	274
H	S1602E	31	13'-3"	STR.	VERT BF	428
J	S1603E	30	8'-3"	STR.	VERT BF	258
K	S1604E	31	10'-7"	4'-9"	TIE	342
L	S1305E	32	30'-0"	STR.	HORIZ EF	641
M	S1606E	20	7'-4"	1'-4"	EXP JT TIE	153
N	S1607E	12	7'-9"	1'-9"	EXP JT TIE	97
P	S1608E	-----	8'-2"	2'-2"	EXP JT TIE	-----
Q	S1609E	38	8'-7"	4'-0"	RAIL DOWEL	341
Q	-----	-----	-----	-----	F-RAILDOWEL	-----

DIMENSIONS

SPREAD FOOTING			
b	3'-3"	e	1'-0"
c	1'-9"	f	5' 0-7/8"
d	8'-8"	g	3' 5- 5/16"

STEM			
a	2'-2"		
j	1' 9- 5/16"		

QUANTITIES

STRUCTURAL CONCRETE (1A43)	
(FOOTING)	
SPREAD	18.8 cu.yd.
STRUCTURAL CONCRETE (3Y43)	
(STEM)	
	31.1 cu.yd.
REINFORCEMENT (PLAIN)	
SPREAD	1262 lb
REINFORCEMENT (EPOXY)	
Subtotal w/o Rail	3078 lb
Subtotal Rail Only	341 lb
TOTAL	3419 lb

STEM HEIGHT:	AT HIGH END= 17'-0"	AT LOW END = 16'-0"
2-ft L.L. SURCHARGE	Panel: H	PANEL LENGTH = 30'-6"

Bar	Mark	No.	Length	A	Location	Weight
SPREAD FOOTING REINFORCEMENT						
A	F1601	20	32'-11"	STR.	LONG T & B	687
B	F1902	31	8'-8"	STR.	TRANS BOT	404
C	F1903	31	8'-8"	STR.	TRANS TOP	404
FOOTING DOWELS & STEM REINFORCEMENT						
D	F1604E	31	3'-0"	STR.	DOWEL FF	97
E	F1905E	31	11'-5"	5'-2"	DOWEL BF	532
F	F1906E	30	8'-0"	7'-0"	DOWEL BF	360
G	S1301E	31	14'-3"	STR.	VERT FF	295
H	S1602E	31	14'-3"	STR.	VERT BF	461
J	S1603E	30	9'-3"	STR.	VERT BF	289
K	S1604E	31	10'-7"	4'-9"	TIE	342
L	S1305E	34	30'-0"	STR.	HORIZ EF	681
M	S1606E	20	7'-4"	1'-4"	EXP JT TIE	153
N	S1607E	14	7'-9"	1'-9"	EXP JT TIE	113
P	S1608E	-----	8'-2"	2'-2"	EXP JT TIE	-----
Q	S1609E	38	8'-7"	4'-0"	RAIL DOWEL	341
Q	-----	-----	-----	-----	F-RAILDOWEL	-----

DIMENSIONS

SPREAD FOOTING			
b	3'-6"	e	1'-0"
c	1'-9"	f	5' 4-3/8"
d	9'-2"	g	3' 8- 5/16"

STEM			
a	2' 2-1/2"		
j	1' 9-13/16"		

QUANTITIES

STRUCTURAL CONCRETE (1A43)	
(FOOTING)	
SPREAD	19.8 cu.yd.
STRUCTURAL CONCRETE (3Y43)	
(STEM)	
	34.6 cu.yd.
REINFORCEMENT (PLAIN)	
SPREAD	1495 lb
REINFORCEMENT (EPOXY)	
Subtotal w/o Rail	3323 lb
Subtotal Rail Only	341 lb
TOTAL	3664 lb

S.P. 179-020-031 S.P. 019-605-028

SHEET 2 OF 5

RWALL2 PANEL TABULATIONS

DRAWN BY: GJ | CHECKED BY: HS | CERTIFIED BY _____ LICENSED PROFESSIONAL ENGINEER LIC. NO. 18520 DATE 6/18/12

STATE PROJ. NO. 1901-148 (T.H. 13) SHEET NO. 284 OF 442 SHEETS

PLOTTED/REVISED: 11-JUN-2012 12:50
DISTRICT #: METRO
IPLOT NAME: d1901148_rw23
PATH & FILENAME: Projects/DM_ROS/013/1901/148/Design/Walls/RW2/d1901148_rw2.dgn

STEM HEIGHT:	AT HIGH END= 18'-0"	AT LOW END = 17'-0"
2-ft L.L. SURCHARGE	Panel: I	PANEL LENGTH = 30'-6"

Bar	Mark	No.	Length	A	Location	Weight
SPREAD FOOTING REINFORCEMENT						
A	F1601	20	32'-11"	STR.	LONG T & B	687
B	F1902	31	9'-2"	STR.	TRANS BOT	427
C	F1903	31	9'-2"	STR.	TRANS TOP	427
FOOTING DOWELS & STEM REINFORCEMENT						
D	F1604E	31	3'-0"	STR.	DOWEL FF	97
E	F2205E	31	12'-9"	5'-6"	DOWEL BF	808
F	F2206E	30	9'-0"	8'-0"	DOWEL BF	552
G	S1301E	31	15'-3"	STR.	VERT FF	316
H	S1602E	31	15'-3"	STR.	VERT BF	493
J	S1603E	30	10'-3"	STR.	VERT BF	321
K	S1604E	31	10'-7"	4'-9"	TIE	342
L	S1305E	36	30'-0"	STR.	HORIZ EF	721
M	S1606E	20	7'-4"	1'-4"	EXP JT TIE	153
N	S1607E	16	7'-9"	1'-9"	EXP JT TIE	129
P	S1608E	-----	8'-2"	2'-2"	EXP JT TIE	-----
Q	S1609E	38	8'-7"	4'-0"	RAIL DOWEL	341
Q	-----	-----	-----	-----	F-RAILDOWEL	-----

Dimensions and quantities

DIMENSIONS			
SPREAD FOOTING			
b	3'-9"	e	1'-0"
c	1'-9"	f	5' 7-7/8"
d	9'-8"	g	3' 11-5/16"

STEM			
a	2'-3"		
j	1' 10-1/4"		

QUANTITIES		
STRUCTURAL CONCRETE (1A43)		
(FOOTING)		
SPREAD	20.8	cu.yd.
STRUCTURAL CONCRETE (3Y43)		
(STEM)		
	37.1	cu.yd.
REINFORCEMENT (PLAIN)		
SPREAD	1541	lb
REINFORCEMENT (EPOXY)		
Subtotal w/o Rail	3932	lb
Subtotal Rail Only	341	lb
TOTAL	4273	lb

STEM HEIGHT:	AT HIGH END= 19'-0"	AT LOW END = 18'-0"
2-ft L.L. SURCHARGE	Panel: J	PANEL LENGTH = 30'-6"

Bar	Mark	No.	Length	A	Location	Weight
SPREAD FOOTING REINFORCEMENT						
A	F1601	22	32'-11"	STR.	LONG T & B	755
B	F1902	31	9'-8"	STR.	TRANS BOT	450
C	F1903	31	9'-8"	STR.	TRANS TOP	450
FOOTING DOWELS & STEM REINFORCEMENT						
D	F1604E	31	3'-0"	STR.	DOWEL FF	97
E	F2205E	31	14'-0"	5'-9"	DOWEL BF	887
F	F2206E	30	10'-3"	9'-3"	DOWEL BF	629
G	S1301E	31	16'-3"	STR.	VERT FF	337
H	S1602E	31	16'-3"	STR.	VERT BF	525
J	S1603E	30	11'-3"	STR.	VERT BF	352
K	S1604E	31	10'-7"	4'-9"	TIE	342
L	S1305E	38	30'-0"	STR.	HORIZ EF	762
M	S1606E	20	7'-4"	1'-4"	EXP JT TIE	153
N	S1607E	18	7'-9"	1'-9"	EXP JT TIE	145
P	S1608E	-----	8'-2"	2'-2"	EXP JT TIE	-----
Q	S1609E	38	8'-7"	4'-0"	RAIL DOWEL	341
Q	-----	-----	-----	-----	F-RAILDOWEL	-----

Dimensions and quantities

DIMENSIONS			
SPREAD FOOTING			
b	4'-0"	e	1'-0"
c	2'-0"	f	5' 11-1/2"
d	10'-2"	g	4' 2-5/16"

STEM			
a	2' 3-1/2"		
j	1' 10-3/4"		

QUANTITIES		
STRUCTURAL CONCRETE (1A43)		
(FOOTING)		
SPREAD	24.7	cu.yd.
STRUCTURAL CONCRETE (3Y43)		
(STEM)		
	39.6	cu.yd.
REINFORCEMENT (PLAIN)		
SPREAD	1655	lb
REINFORCEMENT (EPOXY)		
Subtotal w/o Rail	4229	lb
Subtotal Rail Only	341	lb
TOTAL	4570	lb

STEM HEIGHT:	AT HIGH END= 20'-0"	AT LOW END = 19'-0"
2-ft L.L. SURCHARGE	Panel: K	PANEL LENGTH = 30'-6"

Bar	Mark	No.	Length	A	Location	Weight
SPREAD FOOTING REINFORCEMENT						
A	F1601	22	32'-11"	STR.	LONG T & B	755
B	F1902	31	10'-2"	STR.	TRANS BOT	473
C	F2203	31	10'-2"	STR.	TRANS TOP	644
FOOTING DOWELS & STEM REINFORCEMENT						
D	F1604E	31	3'-0"	STR.	DOWEL FF	97
E	F2505E	31	12'-10"	6'-1"	DOWEL BF	1062
F	F2506E	30	8'-9"	7'-9"	DOWEL BF	701
G	S1301E	31	17'-3"	STR.	VERT FF	357
H	S1902E	31	17'-3"	STR.	VERT BF	803
J	S1903E	30	10'-3"	STR.	VERT BF	462
K	S1604E	31	10'-7"	4'-9"	TIE	342
L	S1305E	40	30'-0"	STR.	HORIZ EF	802
M	S1606E	20	7'-4"	1'-4"	EXP JT TIE	153
N	S1607E	20	7'-9"	1'-9"	EXP JT TIE	162
P	S1608E	-----	8'-2"	2'-2"	EXP JT TIE	-----
Q	S1609E	38	8'-7"	4'-0"	RAIL DOWEL	341
Q	-----	-----	-----	-----	F-RAILDOWEL	-----

Dimensions and quantities

DIMENSIONS			
SPREAD FOOTING			
b	4'-3"	e	1'-0"
c	2'-0"	f	6'-3"
d	10'-8"	g	4' 5-5/16"

STEM			
a	2'-4"		
j	1' 11-3/16"		

QUANTITIES		
STRUCTURAL CONCRETE (1A43)		
(FOOTING)		
SPREAD	26.7	cu.yd.
STRUCTURAL CONCRETE (3Y43)		
(STEM)		
	42.2	cu.yd.
REINFORCEMENT (PLAIN)		
SPREAD	1872	lb
REINFORCEMENT (EPOXY)		
Subtotal w/o Rail	4941	lb
Subtotal Rail Only	341	lb
TOTAL	5282	lb

STEM HEIGHT:	AT HIGH END= 22'-0"	AT LOW END = 20'-0"
2-ft L.L. SURCHARGE	Panel: L	PANEL LENGTH = 30'-6"

Bar	Mark	No.	Length	A	Location	Weight
SPREAD FOOTING REINFORCEMENT						
A	F1901	24	33'-5"	STR.	LONG T & B	1205
B	F2202	31	11'-2"	STR.	TRANS BOT	708
C	F2203	31	11'-2"	STR.	TRANS TOP	708
FOOTING DOWELS & STEM REINFORCEMENT						
D	F1604E	31	3'-0"	STR.	DOWEL FF	97
E	F2505E	31	15'-5"	6'-7"	DOWEL BF	1276
F	F2506E	30	11'-0"	10'-0"	DOWEL BF	881
G	S1301E	31	19'-3"	STR.	VERT FF	399
H	S1902E	31	19'-3"	STR.	VERT BF	896
J	S1903E	30	12'-3"	STR.	VERT BF	552
K	S1604E	31	10'-7"	4'-9"	TIE	342
L	S1305E	44	30'-0"	STR.	HORIZ EF	882
M	S1606E	20	7'-4"	1'-4"	EXP JT TIE	153
N	S1607E	20	7'-9"	1'-9"	EXP JT TIE	162
P	S1608E	4	8'-2"	2'-2"	EXP JT TIE	34
Q	S1609E	38	8'-7"	4'-0"	RAIL DOWEL	341
Q	-----	-----	-----	-----	F-RAILDOWEL	-----

Dimensions and quantities

DIMENSIONS			
SPREAD FOOTING			
b	4'-9"	e	1'-0"
c	2'-3"	f	6' 10-1/8"
d	11'-8"	g	4' 11-5/16"

STEM			
a	2'-5"		
j	2' 0-3/16"		

QUANTITIES		
STRUCTURAL CONCRETE (1A43)		
(FOOTING)		
SPREAD	32.4	cu.yd.
STRUCTURAL CONCRETE (3Y43)		
(STEM)		
	46.5	cu.yd.
REINFORCEMENT (PLAIN)		
SPREAD	2621	lb
REINFORCEMENT (EPOXY)		
Subtotal w/o Rail	5674	lb
Subtotal Rail Only	341	lb
TOTAL	6015	lb

PLOTTED/REVISED: 11-JUN-2012 12:51
DISTRICT #: METRO
IPLOT NAME: d1901148_rw24
PATH & FILENAME: Projects/DM_ROS/013/1901/148/Design/Walls/RW2/d1901148_rw2.dgn

S.P. 179-020-031 S.P. 019-605-028

RWALL2 PANEL TABULATIONS

DRAWN BY: GJ | CHECKED BY: HS | CERTIFIED BY _____ LICENSED PROFESSIONAL ENGINEER | LIC. NO. 18520 DATE 6/18/12

STEM HEIGHT:	AT HIGH END= 22'-0"	AT LOW END = 22'-0"
2-ft L.L. SURCHARGE	Panel: M	PANEL LENGTH = 30'-6"

Bar	Mark	No.	Length	A	Location	Weight
SPREAD FOOTING REINFORCEMENT						
A	F1901	24	33'-5"	STR.	LONG T & B	1205
B	F2202	31	11'-2"	STR.	TRANS BOT	708
C	F2203	31	11'-2"	STR.	TRANS TOP	708
FOOTING DOWELS & STEM REINFORCEMENT						
D	F1604E	31	3'-0"	STR.	DOWEL FF	97
E	F2505E	31	15'-5"	6'-7"	DOWEL BF	1276
F	F2506E	30	11'-0"	10'-0"	DOWEL BF	881
G	S1301E	31	19'-3"	STR.	VERT FF	399
H	S1902E	31	19'-3"	STR.	VERT BF	896
J	S1903E	30	12'-3"	STR.	VERT BF	552
K	S1604E	31	10'-7"	4'-9"	TIE	342
L	S1305E	44	30'-0"	STR.	HORIZ EF	882
M	S1606E	20	7'-4"	1'-4"	EXP JT TIE	153
N	S1607E	20	7'-9"	1'-9"	EXP JT TIE	162
P	S1608E	4	8'-2"	2'-2"	EXP JT TIE	34
Q	S1609E	38	8'-7"	4'-0"	RAIL DOWEL	341
Q	-----	-----	-----	-----	F-RAILDOWEL	-----

Dimensions and quantities

DIMENSIONS			
SPREAD FOOTING			
b	4'-9"	e	1'-0"
c	2'-3"	f	6' 10-1/8"
d	11'-8"	g	4' 11-5/16"

STEM			
a	2'-5"		
j	2' 0-3/16"		

QUANTITIES	
STRUCTURAL CONCRETE (1A43) (FOOTING)	
SPREAD	32.4 cu.yd.
STRUCTURAL CONCRETE (3Y43) (STEM)	
	48.7 cu.yd.
REINFORCEMENT (PLAIN)	
SPREAD	2621 lb
REINFORCEMENT (EPOXY)	
Subtotal w/o Rail	5674 lb
Subtotal Rail Only	341 lb
TOTAL	6015 lb

STEM HEIGHT:	AT HIGH END= 23'-0"	AT LOW END = 22'-0"
2-ft L.L. SURCHARGE	Panel: N	PANEL LENGTH = 30'-6"

Bar	Mark	No.	Length	A	Location	Weight
SPREAD FOOTING REINFORCEMENT						
A	F1901	26	33'-5"	STR.	LONG T & B	1305
B	F1902	31	11'-8"	STR.	TRANS BOT	543
C	F2203	31	11'-8"	STR.	TRANS TOP	739
FOOTING DOWELS & STEM REINFORCEMENT						
D	F1604E	31	3'-0"	STR.	DOWEL FF	97
E	F2905E	31	14'-4"	6'-9"	DOWEL BF	1511
F	F2906E	30	10'-0"	8'-9"	DOWEL BF	1020
G	S1301E	31	20'-3"	STR.	VERT FF	419
H	S2202E	31	20'-3"	STR.	VERT BF	1283
J	S2203E	30	11'-0"	STR.	VERT BF	675
K	S1604E	31	10'-7"	4'-9"	TIE	342
L	S1305E	46	30'-0"	STR.	HORIZ EF	922
M	S1606E	20	7'-4"	1'-4"	EXP JT TIE	153
N	S1607E	20	7'-9"	1'-9"	EXP JT TIE	162
P	S1608E	6	8'-2"	2'-2"	EXP JT TIE	51
Q	S1609E	38	8'-7"	4'-0"	RAIL DOWEL	341
Q	-----	-----	-----	-----	F-RAILDOWEL	-----

Dimensions and quantities

DIMENSIONS			
SPREAD FOOTING			
b	5'-0"	e	1'-0"
c	2'-6"	f	7' 1-3/4"
d	12'-2"	g	5' 2-5/16"

STEM			
a	2' 5-1/2"		
j	2' 0-5/8"		

QUANTITIES	
STRUCTURAL CONCRETE (1A43) (FOOTING)	
SPREAD	37.2 cu.yd.
STRUCTURAL CONCRETE (3Y43) (STEM)	
	50.3 cu.yd.
REINFORCEMENT (PLAIN)	
SPREAD	2587 lb
REINFORCEMENT (EPOXY)	
Subtotal w/o Rail	6635 lb
Subtotal Rail Only	341 lb
TOTAL	6976 lb

STEM HEIGHT:	AT HIGH END= 24'-0"	AT LOW END = 23'-0"
2-ft L.L. SURCHARGE	Panel: O	PANEL LENGTH = 30'-6"

Bar	Mark	No.	Length	A	Location	Weight
SPREAD FOOTING REINFORCEMENT						
A	F1901	26	33'-5"	STR.	LONG T & B	1305
B	F1902	31	12'-1"	STR.	TRANS BOT	563
C	F2503	31	12'-1"	STR.	TRANS TOP	1000
FOOTING DOWELS & STEM REINFORCEMENT						
D	F1604E	31	3'-0"	STR.	DOWEL FF	97
E	F2905E	31	15'-10"	7'-0"	DOWEL BF	1669
F	F2906E	30	11'-3"	10'-0"	DOWEL BF	1148
G	S1301E	31	21'-3"	STR.	VERT FF	440
H	S2202E	31	21'-3"	STR.	VERT BF	1346
J	S2203E	30	12'-0"	STR.	VERT BF	736
K	S1604E	31	10'-7"	4'-9"	TIE	342
L	S1305E	48	30'-0"	STR.	HORIZ EF	962
M	S1606E	20	7'-4"	1'-4"	EXP JT TIE	153
N	S1607E	20	7'-9"	1'-9"	EXP JT TIE	162
P	S1608E	8	8'-2"	2'-2"	EXP JT TIE	68
Q	S1609E	38	8'-7"	4'-0"	RAIL DOWEL	341
Q	-----	-----	-----	-----	F-RAILDOWEL	-----

Dimensions and quantities

DIMENSIONS			
SPREAD FOOTING			
b	5'-3"	e	1'-0"
c	2'-9"	f	7' 5-3/8"
d	12'-9"	g	5' 5-5/16"

STEM			
a	2'-6"		
j	2' 1-1/8"		

QUANTITIES	
STRUCTURAL CONCRETE (1A43) (FOOTING)	
SPREAD	42.6 cu.yd.
STRUCTURAL CONCRETE (3Y43) (STEM)	
	53.1 cu.yd.
REINFORCEMENT (PLAIN)	
SPREAD	2868 lb
REINFORCEMENT (EPOXY)	
Subtotal w/o Rail	7123 lb
Subtotal Rail Only	341 lb
TOTAL	7464 lb

STEM HEIGHT:	AT HIGH END= 24'-0"	AT LOW END = 24'-0"
2-ft L.L. SURCHARGE	Panel: P	PANEL LENGTH = 30'-6"

Bar	Mark	No.	Length	A	Location	Weight
SPREAD FOOTING REINFORCEMENT						
A	F1901	26	33'-5"	STR.	LONG T & B	1305
B	F1902	31	12'-1"	STR.	TRANS BOT	563
C	F2503	31	12'-1"	STR.	TRANS TOP	1000
FOOTING DOWELS & STEM REINFORCEMENT						
D	F1604E	31	3'-0"	STR.	DOWEL FF	97
E	F2905E	31	15'-10"	7'-0"	DOWEL BF	1669
F	F2906E	30	11'-3"	10'-0"	DOWEL BF	1148
G	S1301E	31	21'-3"	STR.	VERT FF	440
H	S2202E	31	21'-3"	STR.	VERT BF	1346
J	S2203E	30	12'-0"	STR.	VERT BF	736
K	S1604E	31	10'-7"	4'-9"	TIE	342
L	S1305E	48	30'-0"	STR.	HORIZ EF	962
M	S1606E	20	7'-4"	1'-4"	EXP JT TIE	153
N	S1607E	20	7'-9"	1'-9"	EXP JT TIE	162
P	S1608E	8	8'-2"	2'-2"	EXP JT TIE	68
Q	S1609E	38	8'-7"	4'-0"	RAIL DOWEL	341
Q	-----	-----	-----	-----	F-RAILDOWEL	-----

Dimensions and quantities

DIMENSIONS			
SPREAD FOOTING			
b	5'-3"	e	1'-0"
c	2'-9"	f	7' 5-3/8"
d	12'-9"	g	5' 5-5/16"

STEM			
a	2'-6"		
j	2' 1-1/8"		

QUANTITIES	
STRUCTURAL CONCRETE (1A43) (FOOTING)	
SPREAD	42.6 cu.yd.
STRUCTURAL CONCRETE (3Y43) (STEM)	
	54.2 cu.yd.
REINFORCEMENT (PLAIN)	
SPREAD	2868 lb
REINFORCEMENT (EPOXY)	
Subtotal w/o Rail	7123 lb
Subtotal Rail Only	341 lb
TOTAL	7464 lb

PLOTTED/REVISED: 11-JUN-2012 12:51
DISTRICT #: METRO
IPLOT NAME: d1901148_rw25
PATH & FILENAME: Projects/DM_ROS/013/1901/148/Design/Walls/RW2/d1901148_rw2.dgn

S.P. 179-020-031 S.P. 019-605-028

RWALL2 PANEL TABULATIONS

DRAWN BY: GJ | CHECKED BY: HS | CERTIFIED BY _____ LICENSED PROFESSIONAL ENGINEER LIC. NO. 18520 DATE 6/18/12

STEM HEIGHT:	AT HIGH END= 24'-0"	AT LOW END = 24'-0"
2-ft L.L. SURCHARGE	Panel: Q	PANEL LENGTH = 30'-6"

Bar	Mark	No.	Length	A	Location	Weight
SPREAD FOOTING REINFORCEMENT						
A	F1901	26	33'-5"	STR.	LONG T & B	1305
B	F1902	31	12'-1"	STR.	TRANS BOT	563
C	F2503	31	12'-1"	STR.	TRANS TOP	1000
FOOTING DOWELS & STEM REINFORCEMENT						
D	F1604E	31	3'-0"	STR.	DOWEL FF	97
E	F2905E	31	15'-10"	7'-0"	DOWEL BF	1669
F	F2906E	30	11'-3"	10'-0"	DOWEL BF	1148
G	S1301E	31	21'-3"	STR.	VERT FF	440
H	S2202E	31	21'-3"	STR.	VERT BF	1346
J	S2203E	30	12'-0"	STR.	VERT BF	736
K	S1604E	31	10'-7"	4'-9"	TIE	342
L	S1305E	48	30'-0"	STR.	HORIZ EF	962
M	S1606E	20	7'-4"	1'-4"	EXP JT TIE	153
N	S1607E	20	7'-9"	1'-9"	EXP JT TIE	162
P	S1608E	8	8'-2"	2'-2"	EXP JT TIE	68
Q	S1609E	38	8'-7"	4'-0"	RAIL DOWEL	341
Q	-----	-----	-----	-----	F-RAILDOWEL	-----

Dimensions and quantities

DIMENSIONS			
SPREAD FOOTING			
b	5'-3"	e	1'-0"
c	2'-9"	f	7' 5-3/8"
d	12'-9"	g	5' 5- 5/16"
STEM			
a	2'-6"		
j	2' 1-1/8"		

QUANTITIES		
STRUCTURAL CONCRETE (1A43)		
(FOOTING)		
SPREAD	42.6	cu.yd.
STRUCTURAL CONCRETE (3Y43)		
(STEM)		
	54.2	cu.yd.
REINFORCEMENT (PLAIN)		
SPREAD	2868	lb
REINFORCEMENT (EPOXY)		
Subtotal w/o Rail	7123 lb	
Subtotal Rail Only	341 lb	
TOTAL	7464 lb	

STEM HEIGHT:	AT HIGH END= 24'-0"	AT LOW END = 24'-0"
2-ft L.L. SURCHARGE	Panel: R	PANEL LENGTH = 21' 9-5/8"

Bar	Mark	No.	Length	A	Location	Weight
SPREAD FOOTING REINFORCEMENT						
A	F1901	26	24'-9"	STR.	LONG T & B	965
B	F1902	22	12'-1"	STR.	TRANS BOT	399
C	F2503	22	12'-1"	STR.	TRANS TOP	710
FOOTING DOWELS & STEM REINFORCEMENT						
D	F1604E	22	3'-0"	STR.	DOWEL FF	69
E	F2905E	22	15'-10"	7'-0"	DOWEL BF	1184
F	F2906E	21	11'-3"	10'-0"	DOWEL BF	803
G	S1301E	22	21'-3"	STR.	VERT FF	312
H	S2202E	22	21'-3"	STR.	VERT BF	1346
J	S2203E	30	12'-0"	STR.	VERT BF	736
K	S1604E	22	10'-7"	4'-9"	TIE	342
L	S1305E	48	21'-4"	STR.	HORIZ EF	683
M	S1606E	20	7'-4"	1'-4"	EXP JT TIE	153
N	S1607E	20	7'-9"	1'-9"	EXP JT TIE	162
P	S1608E	8	8'-2"	2'-2"	EXP JT TIE	68
Q	S1609E	38	8'-7"	4'-0"	RAIL DOWEL	341
Q	-----	-----	-----	-----	F-RAILDOWEL	-----

Dimensions and quantities

DIMENSIONS			
SPREAD FOOTING			
b	5'-3"	e	1'-0"
c	2'-9"	f	7' 5-3/8"
d	12'-9"	g	5' 5- 5/16"
STEM			
a	2'-6"		
j	2' 1-1/8"		

QUANTITIES		
STRUCTURAL CONCRETE (1A43)		
(FOOTING)		
SPREAD	30.4	cu.yd.
STRUCTURAL CONCRETE (3Y43)		
(STEM)		
	38.8	cu.yd.
REINFORCEMENT (PLAIN)		
SPREAD	2074	lb
REINFORCEMENT (EPOXY)		
Subtotal w/o Rail	5858 lb	
Subtotal Rail Only	341 lb	
TOTAL	6199 lb	

S.P. 179-020-031 S.P. 019-605-028

SHEET 5 OF 5

RWALL2 PANEL TABULATIONS

DRAWN BY: GJ | CHECKED BY: HS | CERTIFIED BY _____ LICENSED PROFESSIONAL ENGINEER LIC. NO. 18520 DATE 6/18/12

STATE PROJ. NO. 1901-148 (T.H. 13) SHEET NO. 287 OF 474 SHEETS

PLOTTED/REVISED: 11-JUN-2012 12:51
DISTRICT #: METRO
IPLOT NAME: d1901148_rw26
PATH & FILENAME: Projects/DM_ROS/013/1901/148/Design/Walls/RW2/d1901148_rw2.dgn

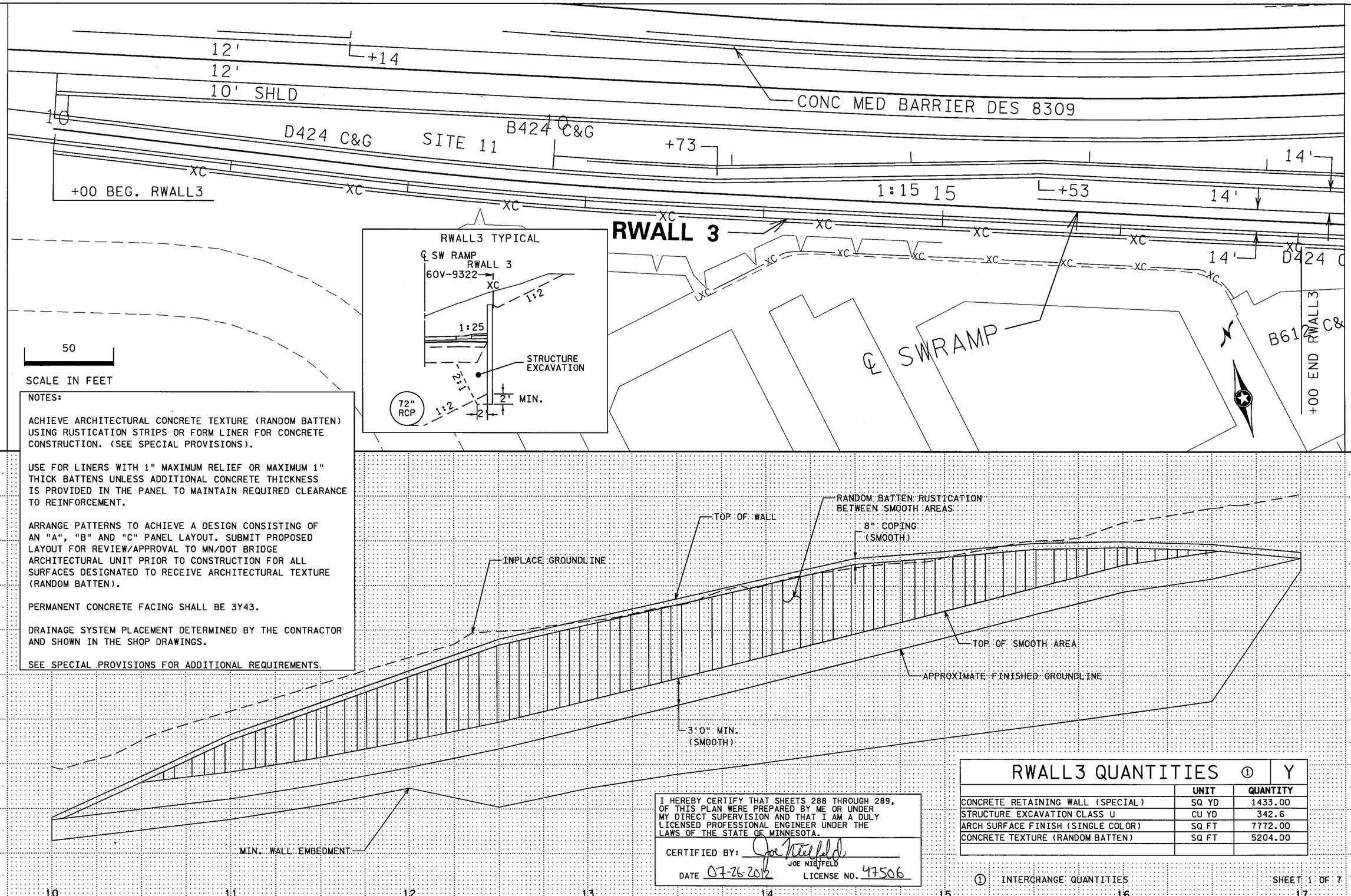

NOTES:

ACHIEVE ARCHITECTURAL CONCRETE TEXTURE (RANDOM BATTEN) USING RUSTICATION STRIPS OR FORM LINER FOR CONCRETE CONSTRUCTION. (SEE SPECIAL PROVISIONS).

USE FOR LINERS WITH 1" MAXIMUM RELIEF OR MAXIMUM 1" THICK BATTENS UNLESS ADDITIONAL CONCRETE THICKNESS IS PROVIDED IN THE PANEL TO MAINTAIN REQUIRED CLEARANCE TO REINFORCEMENT.

ARRANGE PATTERNS TO ACHIEVE A DESIGN CONSISTING OF AN "A", "B" AND "C" PANEL LAYOUT. SUBMIT PROPOSED LAYOUT FOR REVIEW/APPROVAL TO MN/DOT BRIDGE ARCHITECTURAL UNIT PRIOR TO CONSTRUCTION FOR ALL SURFACES DESIGNATED TO RECEIVE ARCHITECTURAL TEXTURE (RANDOM BATTEN).

PERMANENT CONCRETE FACING SHALL BE 3Y43.

DRAINAGE SYSTEM PLACEMENT DETERMINED BY THE CONTRACTOR AND SHOWN IN THE SHOP DRAWINGS.

SEE SPECIAL PROVISIONS FOR ADDITIONAL REQUIREMENTS.

I HEREBY CERTIFY THAT SHEETS 288 THROUGH 289, OF THIS PLAN WERE PREPARED BY ME OR UNDER MY DIRECT SUPERVISION AND THAT I AM A DULY LICENSED PROFESSIONAL ENGINEER UNDER THE LAWS OF THE STATE OF MINNESOTA.

CERTIFIED BY: Joe Nietfeld
JOE NIETFELD
DATE 07-26-2012 LICENSE NO. 47506

RWALL3 QUANTITIES ①	Y
	UNIT	QUANTITY
CONCRETE RETAINING WALL (SPECIAL)	SQ YD	1433.00
STRUCTURE EXCAVATION CLASS U	CU YD	342.6
ARCH SURFACE FINISH (SINGLE COLOR)	SQ FT	7772.00
CONCRETE TEXTURE (RANDOM BATTEN)	SQ FT	5204.00

① INTERCHANGE QUANTITIES

SHEET 1 OF 7

S.P. 179-020-031 S.P. 019-605-028

RWALL3 PLAN AND PROFILE

DRAWN BY: GJ | CHECKED BY: HS | CERTIFIED BY _____ LICENSED PROFESSIONAL ENGINEER LIC. NO. _____ DATE 7/26/12

STATE PROJ. NO. 1901-148 (T.H. 13) SHEET NO. 288 OF 442 SHEETS

PLOTTED/REVISED: 26-JUL-2012 07:12
DISTRICT #: METRO
PLOT NAME: d1901148_rw3
PATH & FILENAME: Projects/DM_ROS/013/1901/148/Design/Walls/RW3/d1901148_rw3.dgn

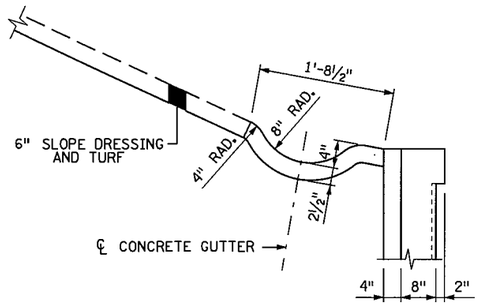

CONCRETE GUTTER DETAIL

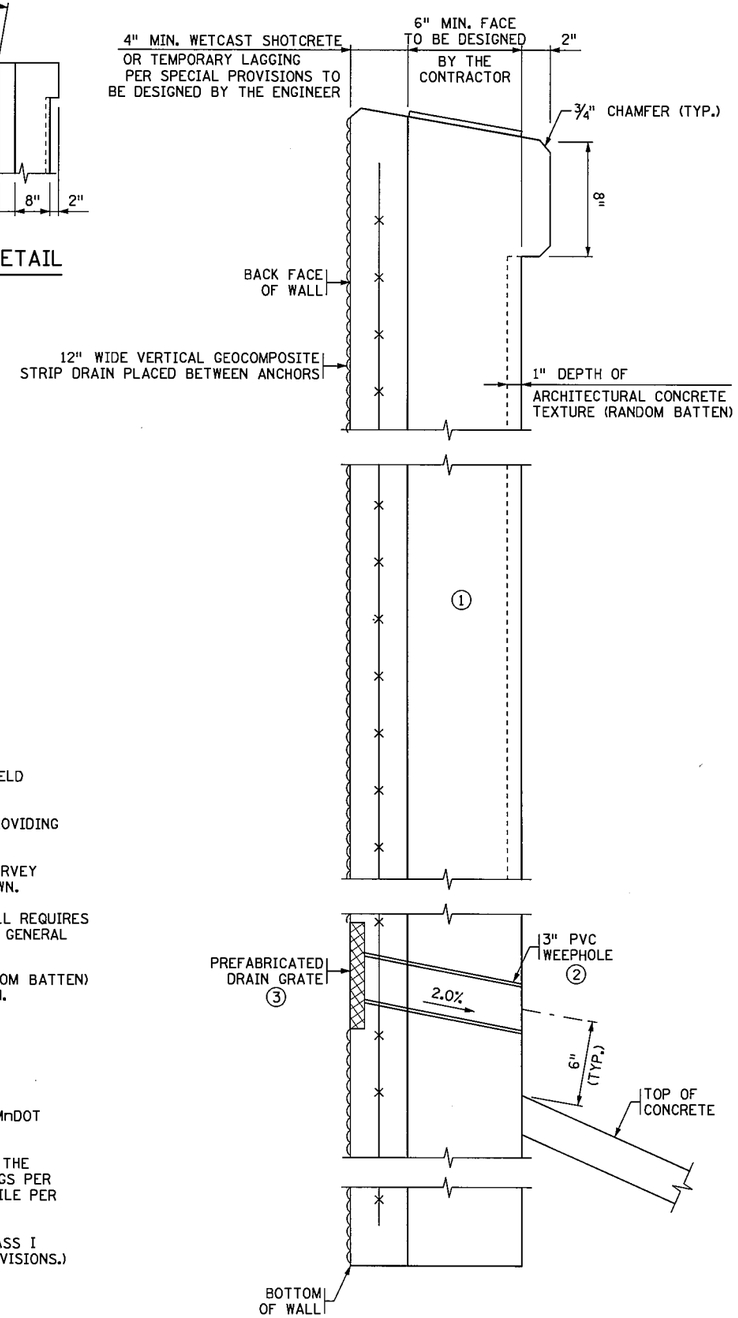

TYPICAL WALL SECTION

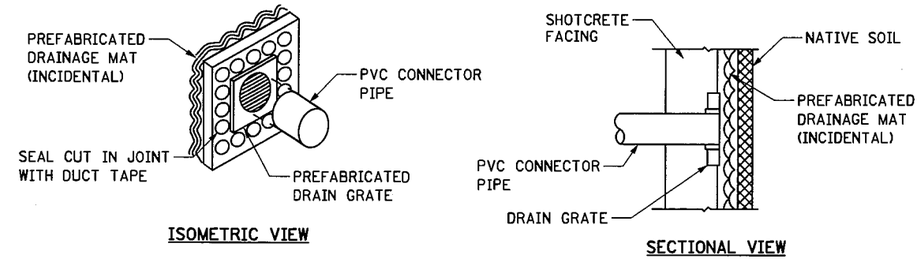

ISOMETRIC VIEW

SECTIONAL VIEW

WALL DRAIN

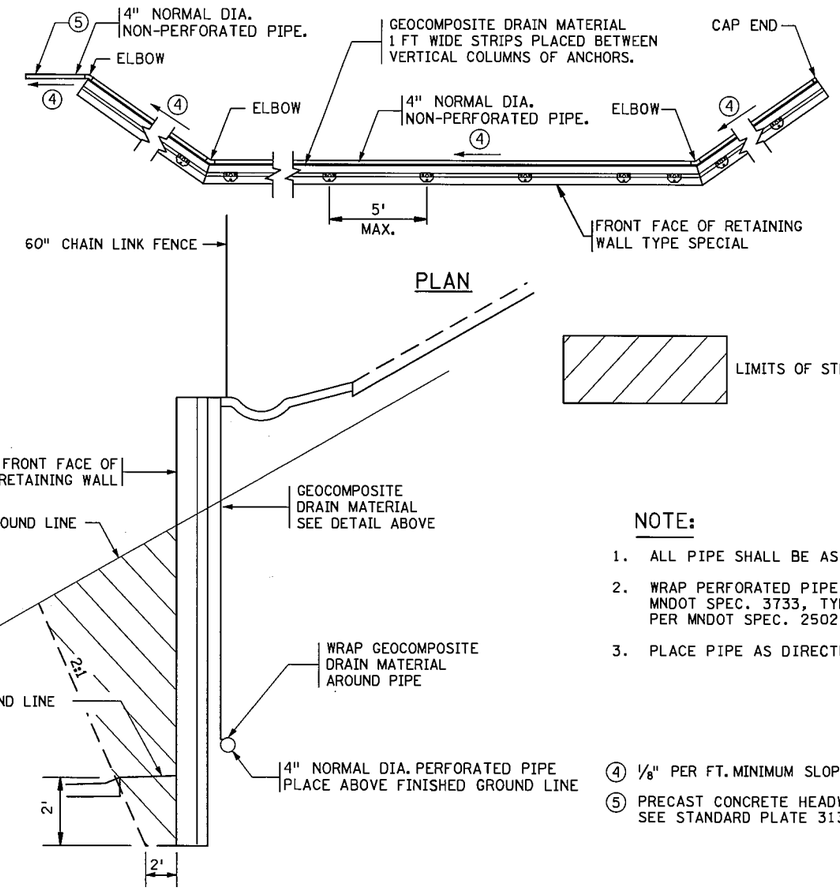

PLAN

TYPICAL SECTION THRU RETAINING WALL

NOTES:

THE CONTRACTOR IS RESPONSIBLE FOR FIELD LOCATING ALL UTILITIES.

THE CONTRACTOR IS RESPONSIBLE FOR PROVIDING STABLE SLOPES DURING EXCAVATION.

THE CONTRACTOR IS RESPONSIBLE FOR SURVEY CONTROL AS EXCAVATION IS BROUGHT DOWN.

EXCAVATION IN THE VICINITY OF THE WALL REQUIRES SPECIAL CARE AND EFFORT COMPARED TO GENERAL ROADWAY CONSTRUCTION.

ARCHITECTURAL CONCRETE TEXTURE (RANDOM BATTEN) AND WALL THICKNESS SHALL BE AS SHOWN.

DRAINAGE SHALL BE AS SHOWN.

① PERMANENT CONCRETE FACING SHALL BE MnDOT MIX 3Y43.

② OUTLET PIPE PLACEMENT DETERMINED BY THE CONTRACTOR AND SHOWN IN SHOP DRAWINGS PER MnDOT 3245 AND WRAPPED WITH GEOTEXTILE PER MnDOT 3733.

③ ALL METALLIC COMPONENTS SHALL BE CLASS I CORROSION RESISTANT. (SEE SPECIAL PROVISIONS.)

NOTE:

1. ALL PIPE SHALL BE AS PER MNDOT SPEC. 3245.
2. WRAP PERFORATED PIPE WITH GEOTEXTILE AS PER MNDOT SPEC. 3733, TYPE 1. ATTACH TO PIPE AS PER MNDOT SPEC. 2502.
3. PLACE PIPE AS DIRECTED BY ENGINEER.

④ ⅛" PER FT. MINIMUM SLOPE.

⑤ PRECAST CONCRETE HEADWALL WITH RODENT SCREEN. SEE STANDARD PLATE 3131 FOR DETAILS.

DRAINAGE SYSTEM

SHEET 2 OF 7

DRAWN BY: CT	CHECKED BY: HS	CERTIFIED BY Joe Nietfeld LICENSED PROFESSIONAL ENGINEER LIC. NO. 47506 DATE 6/19/12	RWALL 3 DETAILS STATE PROJ. NO. 1901-148 (T.H. 13) SHEET NO. 289 OF 442 SHEETS

PLOTTED/REVISED: 19-JUN-2012 07:51
DISTRICT #: METRO
IPLOT NAME: d1901148_rw3det
PATH & FILENAME: Projects/DM_ROS/013/1901/148/Design/Walls/RW3/d1901148_rw3det.dgn

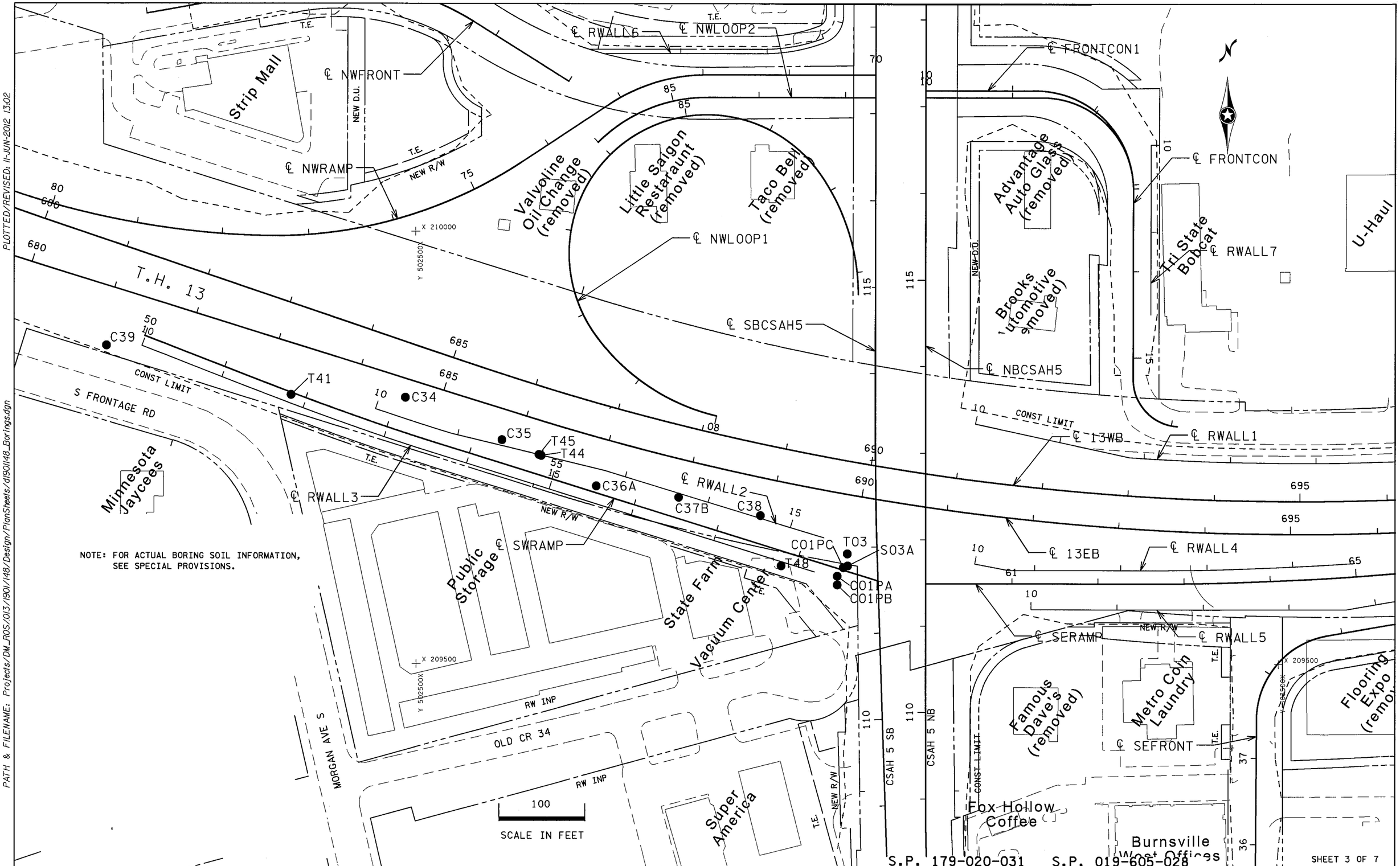

NOTE: FOR ACTUAL BORING SOIL INFORMATION, SEE SPECIAL PROVISIONS.

DISTRICT #: METRO
IPLOT NAME: d190l148_Borings
PATH & FILENAME: Projects/DM_ROS/013/190l/148/Design/PlanSheets/d190l148_Borings.dgn
PLOTTED/REVISED: 11-JUN-2012 13:02

RWALL3 BORE HOLE LOCATIONS

DRAWN BY: MRS	CHECKED BY: HS	CERTIFIED BY LICENSED PROFESSIONAL ENGINEER	LIC. NO. 18520 DATE 6/18/12	STATE PROJ. NO. 1901-148 (T.H. 13)	SHEET NO. 290 OF 442 SHEETS

EXCAVATION CU.YD.	EMBANKMENT CU.YD.

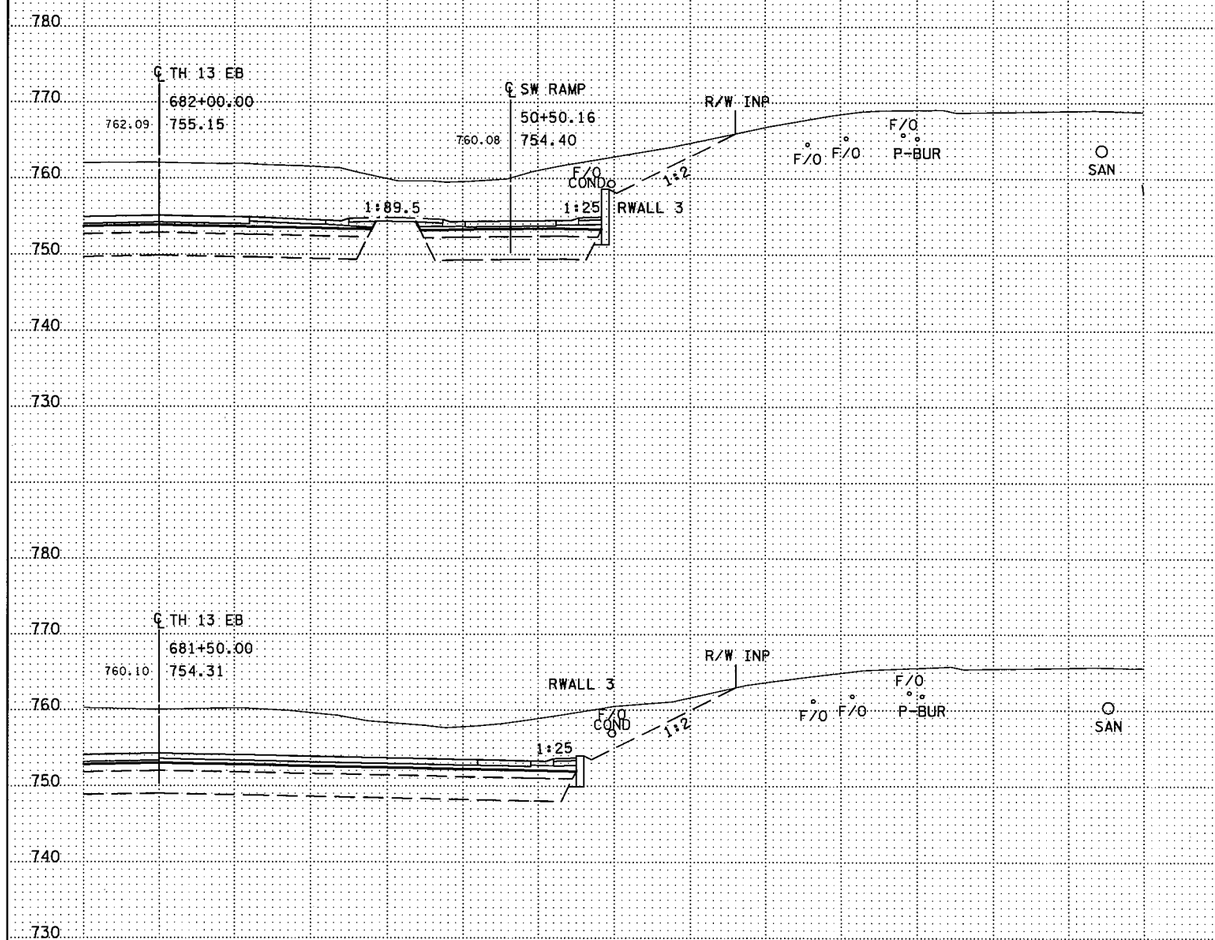

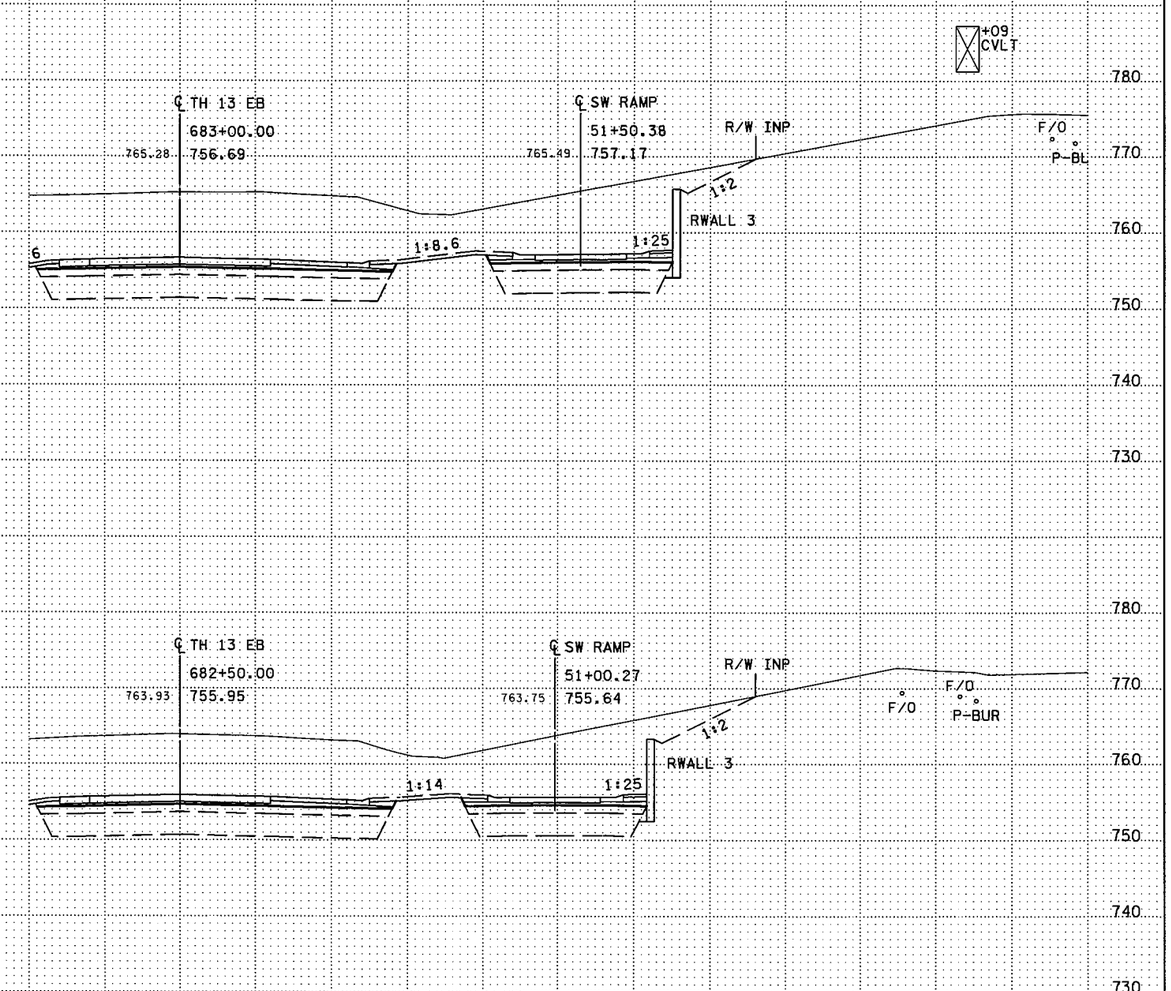

RWALL 3

TH 13 EB STA.681+50.00 -683+00

S.P. 179-020-031 S.P. 019-605-028

SHEET 4 OF 7

DRAWN BY: MRS	CHECKED BY: HS	CERTIFIED BY LICENSED PROFESSIONAL ENGINEER	LIC. NO. 18520 DATE 6/18/12	STATE PROJ. NO. 1901-148 (TH 13) SHEET NO. 291 OF 442 SHEETS

DISTRICT * : METRO
IPLOT NAME: d190l148_rwall3_xpl
PATH & FILENAME: Projects/DM_ROS/013/1901/148/Design/Walls/RW3/d190l148_rwall3_xpl.dgn
PLOTTED/REVISED: 11-JUN-2012 13:18

PLOTTED/REVISED: 11-JUN-2012 13:18
DISTRICT *: METRO
IPLOT NAME: d1901148_rwall3_xpll
PATH & FILENAME: Projects/DM_ROS/013/1901/148/Design/Walls/RW3/d1901148_rwall3_xpl.dgn

	EXCAVATION CU.YD.	EMBANKMENT CU.YD.

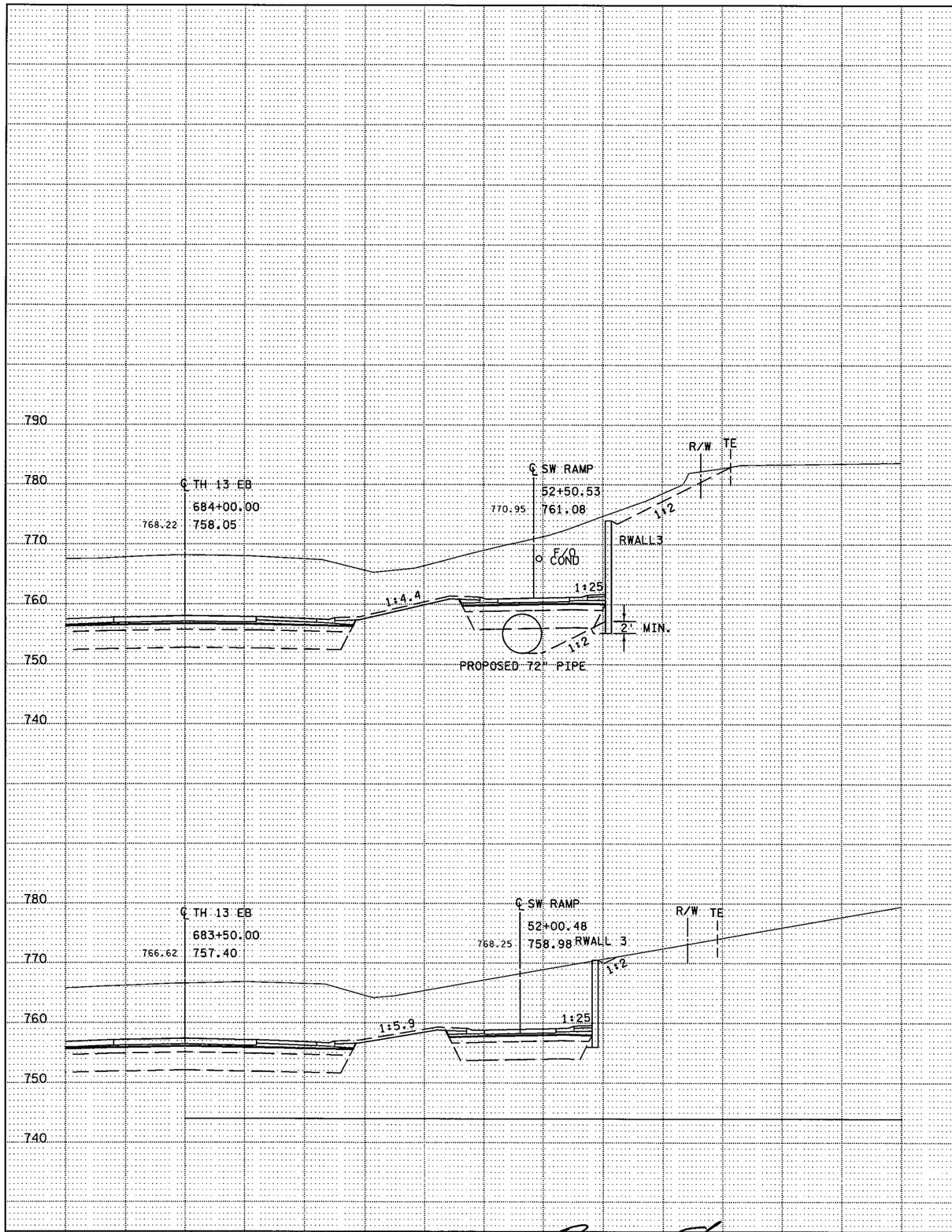

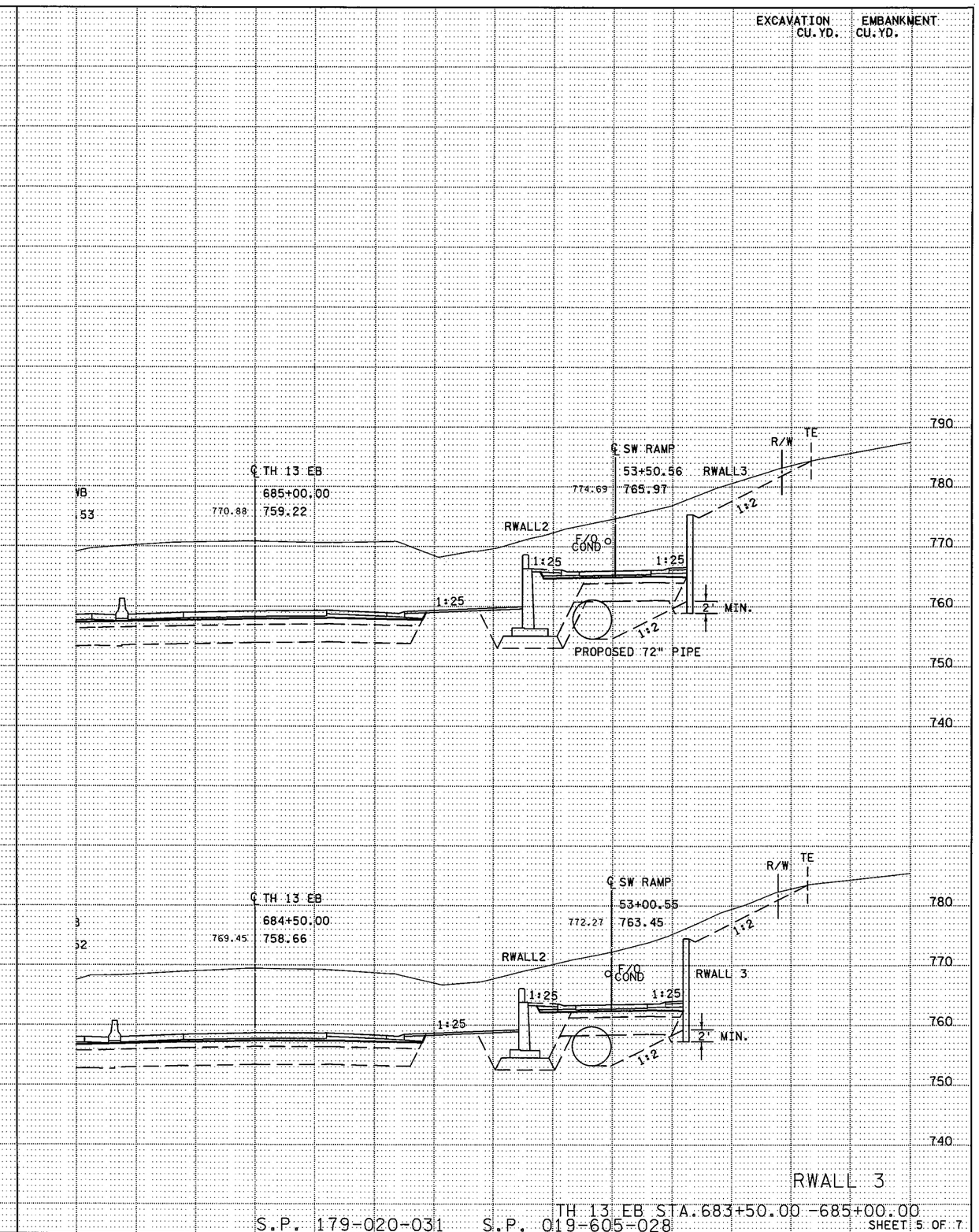

RWALL 3

S.P. 179-020-031 S.P. 019-605-028 TH 13 EB STA.683+50.00 -685+00.00

SHEET 5 OF 7

DRAWN BY: MRS	CHECKED BY: HS	CERTIFIED BY LICENSED PROFESSIONAL ENGINEER	LIC. NO. 18520 DATE 6/18/12	STATE PROJ. NO. 1901-148 (TH 13) SHEET NO. 292 OF 442 SHEETS

PLOTTED/REVISED: 11-JUN-2012 13:18
DISTRICT #: METRO
IPLOT NAME: d1901148_rwall3_xpl2
PATH & FILENAME: Projects/DM_ROS/013/1901/148/Design/Walls/RW3/d1901148_rwall3_xpl.dgn

	EXCAVATION CU. YD.	EMBANKMENT CU. YD.
RWALL 3		

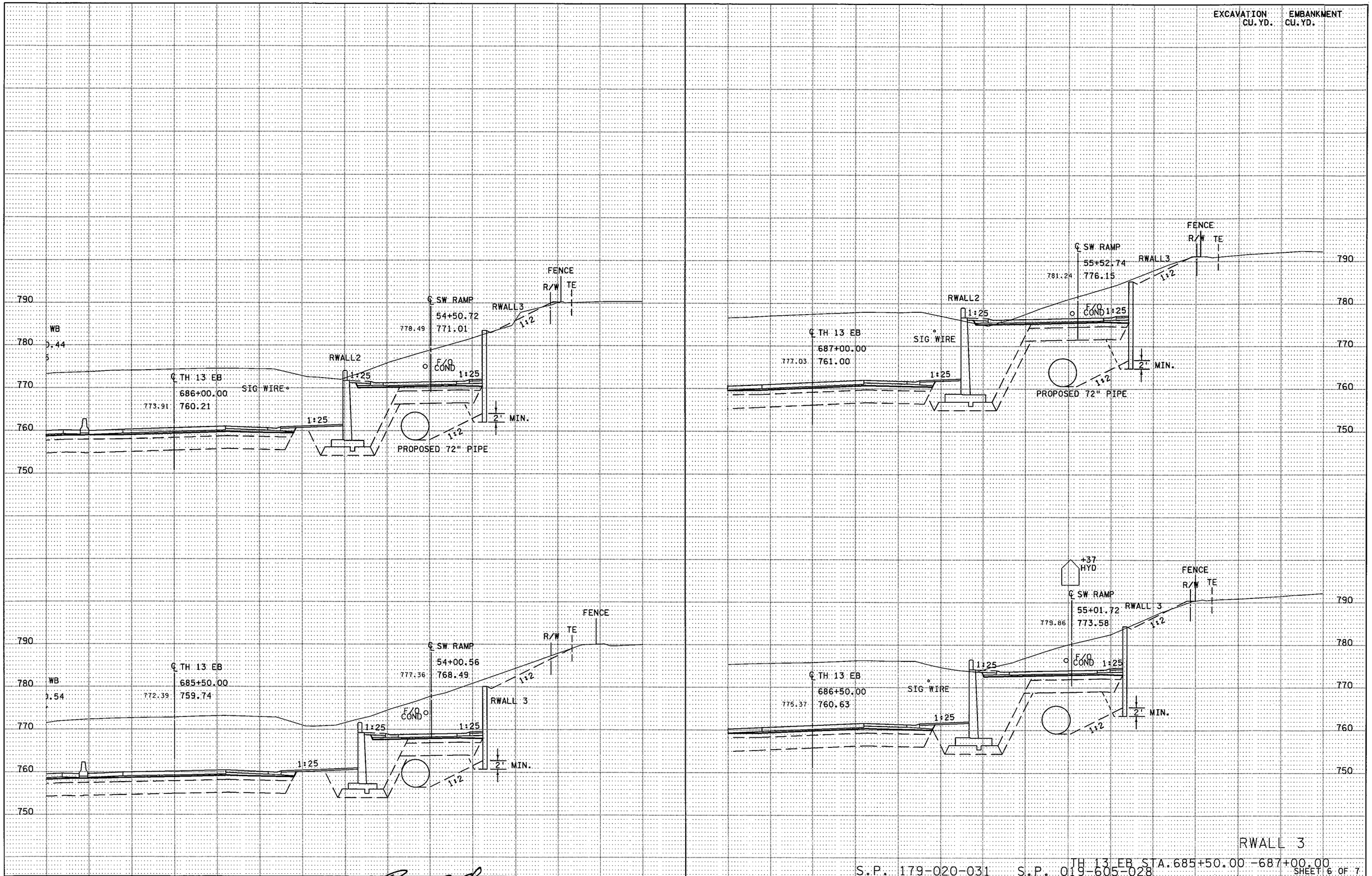

S.P. 179-020-031 S.P. 019-605-028 TH 13 EB STA.685+50.00 -687+00.00

SHEET 6 OF 7

DRAWN BY: MRS	CHECKED BY: HS	CERTIFIED BY LICENSED PROFESSIONAL ENGINEER	LIC. NO. 18520 DATE 6/18/12	STATE PROJ. NO. 1901-148 (TH 13) SHEET NO. 293 OF 442 SHEETS

EXCAVATION CU. YD.	EMBANKMENT CU. YD.

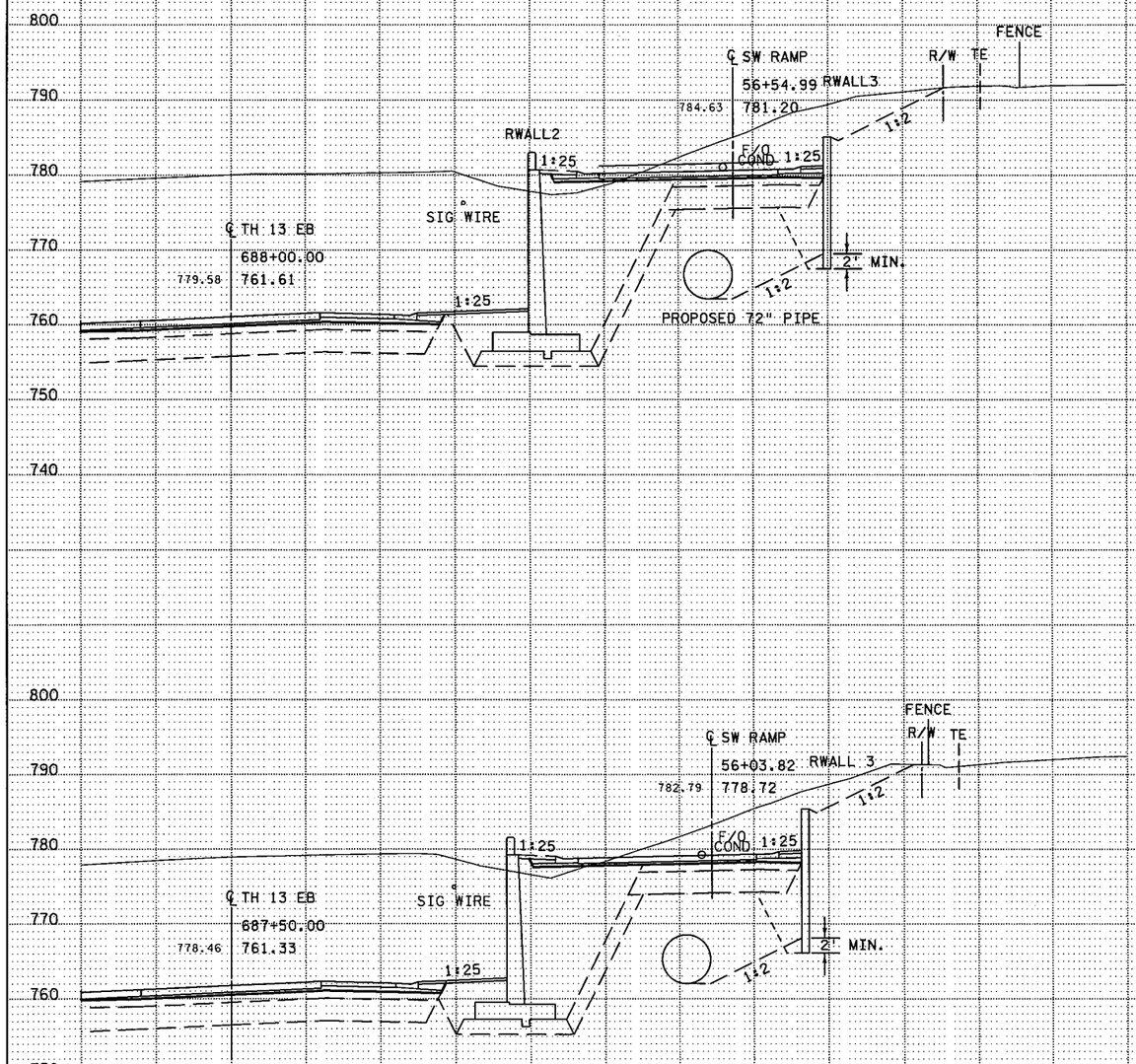

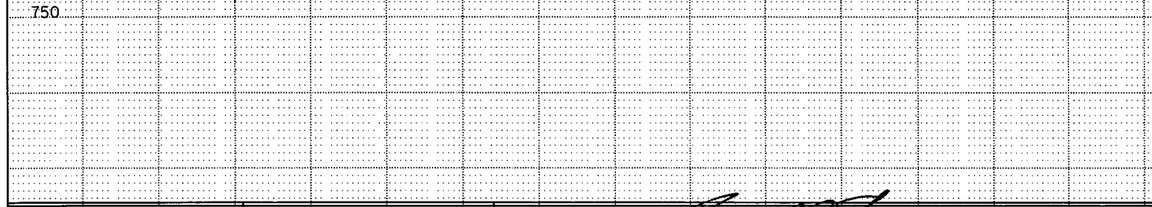

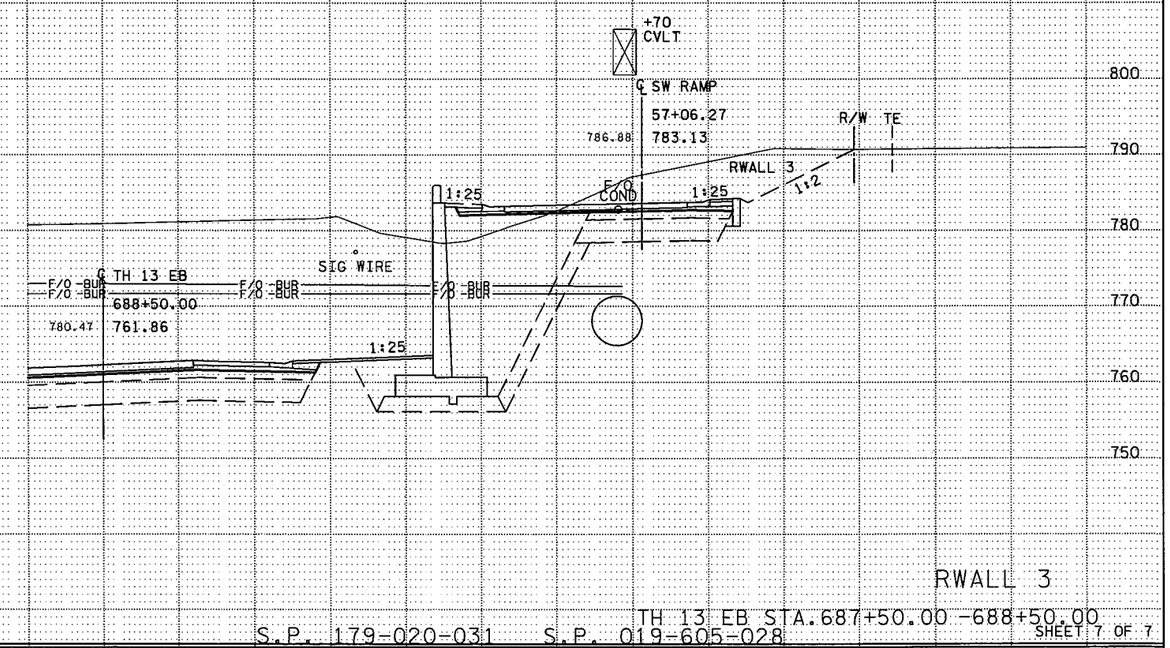

RWALL 3

TH 13 EB STA.687+50.00 -688+50.00

S.P. 179-020-031 S.P. 019-605-028

SHEET 7 OF 7

DRAWN BY: MRS	CHECKED BY: HS	CERTIFIED BY LICENSED PROFESSIONAL ENGINEER LIC. NO. 18520 DATE 6/18/12	STATE PROJ. NO. 1901-148 (TH 13) SHEET NO. 294 OF 442 SHEETS

PLOTTED/REVISED: 11-JUN-2012 13:18

DISTRICT #: METRO
IPLOT NAME: d190148_rwall3_xpl3
PATH & FILENAME: Projects/DM_ROS/013/190148/Design/Walls/RW3/d190148_rwall3_xpl.dgn

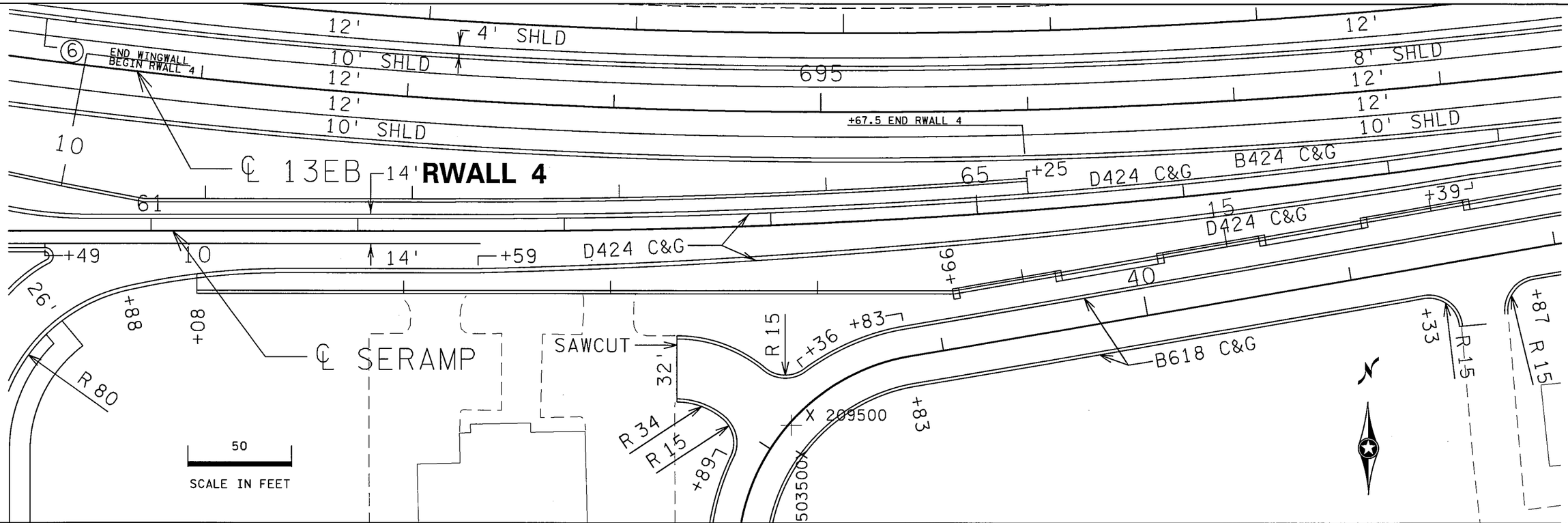

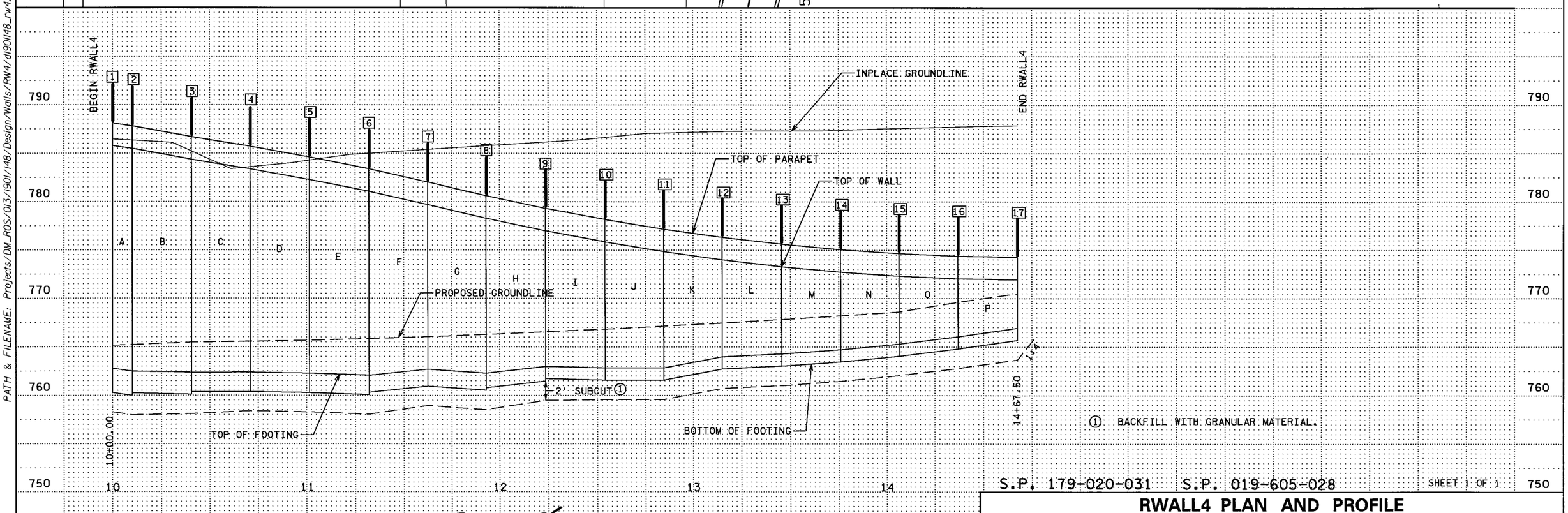

① BACKFILL WITH GRANULAR MATERIAL.

S.P. 179-020-031 S.P. 019-605-028

SHEET 1 OF 1

RWALL4 PLAN AND PROFILE

DRAWN BY: GJ	CHECKED BY: HS	CERTIFIED BY LICENSED PROFESSIONAL ENGINEER	LIC. NO. 18520 DATE 6/18/12	STATE PROJ. NO. 1901-148 (T.H. 13) SHEET NO. 295 OF 442 SHEETS

DISTRICT #: METRO
IPLOT NAME: d190l148_rw45
PATH & FILENAME: Projects/DM_ROS/013/1901/148/Design/Walls/RW4/d190l148_rw4.dgn
PLOTTED/REVISED: 11-JUN-2012 13:44

RETAINING WALL RETW4

LIVE LOAD SURCHARGE - SPECIAL DESIGN

JOINT NO.	STATION	X	Y	PROPOSED GROUND LINE	TOP OF WALL	TOP OF FOOTING HEEL	BOTTOM OF FOOTING	WALL HEIGHT	PANEL LENGTH	PANEL NAME
1	10+00.00	503147.329	209616.517	765.150	785.790	762.790	760.290	23.000		
2	10+10.00	503157.149	209614.631	765.230	785.500	762.500	760.000	23.000	10.00	A
3	10+40.50	503187.102	209608.880	765.480	784.370	762.370	760.120	22.000	30.50	B
4	10+71.00	503217.602	209608.891	765.570	783.390	762.390	760.390	21.000	30.50	C
5	11+01.50	503248.102	209608.903	765.690	782.290	762.290	760.290	20.000	30.50	D
6	11+32.00	503278.602	209608.915	765.860	781.070	762.070	760.070	19.000	30.50	E
7	11+62.50	503309.102	209608.927	766.060	779.700	762.700	760.950	17.000	30.50	F
8	11+93.00	503339.602	209608.939	766.290	778.280	762.280	760.530	16.000	30.50	G
9	12+23.50	503370.102	209609.007	766.550	776.990	762.990	761.490	14.000	30.50	H
10	12+54.00	503400.600	209609.329	766.840	775.840	762.840	761.590	13.000	30.50	I
11	12+84.50	503431.094	209609.921	767.150	774.840	762.840	761.590	12.000	30.50	J
12	13+15.00	503461.582	209610.783	767.480	773.990	763.990	762.740	10.000	30.50	K
13	13+45.50	503492.061	209611.915	767.840	773.280	764.280	763.030	9.000	30.50	L
14	13+76.00	503522.529	209613.318	768.220	772.720	764.720	763.470	8.000	30.50	M
15	14+06.50	503552.983	209614.990	768.630	772.310	765.310	764.060	7.000	30.50	N
16	14+37.00	503583.421	209616.932	769.620	772.050	766.050	764.800	6.000	30.50	O
17	14+67.50	503613.840	209619.144	770.500	771.930	766.930	765.680	5.000	30.50	P

SUMMARY OF QUANTITIES FOR RETAINING WALL RETW4

(STANDARD MN/DOT CANTILEVER DESIGN)

PANEL	STRUCTURAL CONCRETE		REINFORCEMENT BARS			TYPE P-1(TL-2) RAILING CONCRETE (3Y46)②	ARCHITECTURAL CONCRETE TEXTURE (RANDOM BATTEN)	ARCHITECTURAL SURFACE FINISH (SINGLE COLOR)
	1A43 (FOOTING)	3Y43 (STEM)	PLAIN (WALL)	EPOXY (WALL)	EPOXY① (PARAPET)			
	CU YD	CU YD	LB	LB	LB	LIN FT	SQ FT	SQ FT
A	12.2	16.9	917	4258	112	10.0	204.6	288.9
B	37.2	50.3	2587	6976	341	30.5	597.2	864.1
C	32.4	47.6	2621	6015	341	30.5	559.8	833.6
D	27.9	44.9	2176	5643	341	30.5	524.9	803.1
E	26.7	42.2	1872	5282	341	30.5	485.1	772.6
F	24.7	38.5	1655	4570	341	30.5	440.0	726.9
G	19.8	34.6	1495	3664	341	30.5	390.9	681.1
H	18.8	31.1	1262	3419	341	30.5	342.1	635.4
I	14.5	27.3	1235	2739	341	30.5	296.5	589.6
J	12.8	25.0	1229	2556	341	30.5	254.5	559.1
K	12.3	21.7	1079	2385	341	30.5	216.6	513.4
L	9.9	18.3	768	2030	341	30.5	182.2	467.6
M	9.1	16.2	736	1722	341	30.5	151.6	437.1
N	8.3	14.1	633	1605	341	30.5	124.8	406.6
O	7.4	12.1	601	1497	341	30.5	93.2	376.1
P	6.6	10.1	501	1388	341	30.5	58.9	345.6
TOTALS	280.6	434.0	21367.0	55749.0	5227.0	467.5	4922.9	9300.8

① CONSISTS OF PARAPET BARRIER DOWEL BAR IDENTIFIED AS THE Q BAR. FOR DETAILS SEE SHEET NO. 336.

② FOR DETAILS, SEE SHEET NO. 342.

STEM HEIGHT:	AT HIGH END= 23'-0"	AT LOW END = 23'-0"
2-ft L.L. SURCHARGE	Panel: A	PANEL LENGTH = 10'-0"

Bar	Mark	No.	Length	A	Location	Weight
SPREAD FOOTING REINFORCEMENT						
A	F1901	26	12'-11"	STR.	LONG T & B	504
B	F1902	10	11'-8"	STR.	TRANS BOT	175
C	F2203	10	11'-8"	STR.	TRANS TOP	238
FOOTING DOWELS & STEM REINFORCEMENT						
D	F1604E	10	3'-0"	STR.	DOWEL FF	31
E	F2905E	10	14'-4"	6'-9"	DOWEL BF	487
F	F2906E	9	10'-0"	8'-9"	DOWEL BF	306
G	S1301E	10	20'-3"	STR.	VERT FF	135
H	S2202E	10	20'-3"	STR.	VERT BF	1283
J	S2203E	30	11'-0"	STR.	VERT BF	675
K	S1604E	10	10'-7"	4'-9"	TIE	342
L	S1305E	46	9'-6"	STR.	HORIZ EF	292
M	S1606E	20	7'-4"	1'-4"	EXP JT TIE	153
N	S1607E	20	7'-9"	1'-9"	EXP JT TIE	162
P	S1608E	6	8'-2"	2'-2"	EXP JT TIE	51
Q	S1609E	38	8'-7"	4'-0"	RAIL DOWEL	341
Q	-----	-----	-----	-----	F-RAILDOWEL	-----

Dimensions and quantities			
DIMENSIONS			
SPREAD FOOTING			
b	5'-0"	e	1'-0"
c	2'-6"	f	7' 1-3/4"
d	12'-2"	g	5' 2- 5/16"
STEM			
a	2' 5-1/2"		
j	2' 0-5/8"		
QUANTITIES			
STRUCTURAL CONCRETE (1A43)			
(FOOTING)			
SPREAD	12.2	cu.yd.	
STRUCTURAL CONCRETE (3Y43)			
(STEM)			
	16.9	cu.yd.	
REINFORCEMENT (PLAIN)			
SPREAD	917	lb	
REINFORCEMENT (EPOXY)			
Subtotal w/o Rail	3917 lb		
Subtotal Rail Only	341 lb		
TOTAL	4258 lb		

STEM HEIGHT:	AT HIGH END= 23'-0"	AT LOW END = 22'-0"
2-ft L.L. SURCHARGE	Panel: B	PANEL LENGTH = 30'-6"

Bar	Mark	No.	Length	A	Location	Weight
SPREAD FOOTING REINFORCEMENT						
A	F1901	26	33'-5"	STR.	LONG T & B	1305
B	F1902	31	11'-8"	STR.	TRANS BOT	543
C	F2203	31	11'-8"	STR.	TRANS TOP	739
FOOTING DOWELS & STEM REINFORCEMENT						
D	F1604E	31	3'-0"	STR.	DOWEL FF	97
E	F2905E	31	14'-4"	6'-9"	DOWEL BF	1511
F	F2906E	30	10'-0"	8'-9"	DOWEL BF	1020
G	S1301E	31	20'-3"	STR.	VERT FF	419
H	S2202E	31	20'-3"	STR.	VERT BF	1283
J	S2203E	30	11'-0"	STR.	VERT BF	675
K	S1604E	31	10'-7"	4'-9"	TIE	342
L	S1305E	46	30'-0"	STR.	HORIZ EF	922
M	S1606E	20	7'-4"	1'-4"	EXP JT TIE	153
N	S1607E	20	7'-9"	1'-9"	EXP JT TIE	162
P	S1608E	6	8'-2"	2'-2"	EXP JT TIE	51
Q	S1609E	38	8'-7"	4'-0"	RAIL DOWEL	341
Q	-----	-----	-----	-----	F-RAILDOWEL	-----

Dimensions and quantities			
DIMENSIONS			
SPREAD FOOTING			
b	5'-0"	e	1'-0"
c	2'-6"	f	7' 1-3/4"
d	12'-2"	g	5' 2- 5/16"
STEM			
a	2' 5-1/2"		
j	2' 0-5/8"		
QUANTITIES			
STRUCTURAL CONCRETE (1A43)			
(FOOTING)			
SPREAD	37.2	cu.yd.	
STRUCTURAL CONCRETE (3Y43)			
(STEM)			
	50.3	cu.yd.	
REINFORCEMENT (PLAIN)			
SPREAD	2587	lb	
REINFORCEMENT (EPOXY)			
Subtotal w/o Rail	6635 lb		
Subtotal Rail Only	341 lb		
TOTAL	6976 lb		

STEM HEIGHT:	AT HIGH END= 22'-0"	AT LOW END = 21'-0"
2-ft L.L. SURCHARGE	Panel: C	PANEL LENGTH = 30'-6"

Bar	Mark	No.	Length	A	Location	Weight
SPREAD FOOTING REINFORCEMENT						
A	F1901	24	33'-5"	STR.	LONG T & B	1205
B	F2202	31	11'-2"	STR.	TRANS BOT	708
C	F2203	31	11'-2"	STR.	TRANS TOP	708
FOOTING DOWELS & STEM REINFORCEMENT						
D	F1604E	31	3'-0"	STR.	DOWEL FF	97
E	F2505E	31	15'-5"	6'-7"	DOWEL BF	1276
F	F2506E	30	11'-0"	10'-0"	DOWEL BF	881
G	S1301E	31	19'-3"	STR.	VERT FF	399
H	S1902E	31	19'-3"	STR.	VERT BF	896
J	S1903E	30	12'-3"	STR.	VERT BF	552
K	S1604E	31	10'-7"	4'-9"	TIE	342
L	S1305E	44	30'-0"	STR.	HORIZ EF	882
M	S1606E	20	7'-4"	1'-4"	EXP JT TIE	153
N	S1607E	20	7'-9"	1'-9"	EXP JT TIE	162
P	S1608E	4	8'-2"	2'-2"	EXP JT TIE	34
Q	S1609E	38	8'-7"	4'-0"	RAIL DOWEL	341
Q	-----	-----	-----	-----	F-RAILDOWEL	-----

Dimensions and quantities			
DIMENSIONS			
SPREAD FOOTING			
b	4'-9"	e	1'-0"
c	2'-3"	f	6' 10-1/8"
d	11'-8"	g	4' 11- 5/16"
STEM			
a	2'-5"		
j	2' 0- 3/16"		
QUANTITIES			
STRUCTURAL CONCRETE (1A43)			
(FOOTING)			
SPREAD	32.4	cu.yd.	
STRUCTURAL CONCRETE (3Y43)			
(STEM)			
	47.6	cu.yd.	
REINFORCEMENT (PLAIN)			
SPREAD	2621	lb	
REINFORCEMENT (EPOXY)			
Subtotal w/o Rail	5674 lb		
Subtotal Rail Only	341 lb		
TOTAL	6015 lb		

STEM HEIGHT:	AT HIGH END= 21'-0"	AT LOW END = 20'-0"
2-ft L.L. SURCHARGE	Panel: D	PANEL LENGTH = 30'-6"

Bar	Mark	No.	Length	A	Location	Weight
SPREAD FOOTING REINFORCEMENT						
A	F1601	24	32'-11"	STR.	LONG T & B	824
B	F2202	31	10'-8"	STR.	TRANS BOT	676
C	F2203	31	10'-8"	STR.	TRANS TOP	676
FOOTING DOWELS & STEM REINFORCEMENT						
D	F1604E	31	3'-0"	STR.	DOWEL FF	97
E	F2505E	31	14'-2"	6'-5"	DOWEL BF	1173
F	F2506E	30	9'-9"	8'-9"	DOWEL BF	781
G	S1301E	31	18'-3"	STR.	VERT FF	378
H	S1902E	31	18'-3"	STR.	VERT BF	850
J	S1903E	30	11'-3"	STR.	VERT BF	507
K	S1604E	31	10'-7"	4'-9"	TIE	342
L	S1305E	42	30'-0"	STR.	HORIZ EF	842
M	S1606E	20	7'-4"	1'-4"	EXP JT TIE	153
N	S1607E	20	7'-9"	1'-9"	EXP JT TIE	162
P	S1608E	2	8'-2"	2'-2"	EXP JT TIE	17
Q	S1609E	38	8'-7"	4'-0"	RAIL DOWEL	341
Q	-----	-----	-----	-----	F-RAILDOWEL	-----

Dimensions and quantities			
DIMENSIONS			
SPREAD FOOTING			
b	4'-6"	e	1'-0"
c	2'-0"	f	6' 6-1/2"
d	11'-2"	g	4' 8- 5/16"
STEM			
a	2' 4-1/2"		
j	1' 11-11/16"		
QUANTITIES			
STRUCTURAL CONCRETE (1A43)			
(FOOTING)			
SPREAD	27.9	cu.yd.	
STRUCTURAL CONCRETE (3Y43)			
(STEM)			
	44.9	cu.yd.	
REINFORCEMENT (PLAIN)			
SPREAD	2176	lb	
REINFORCEMENT (EPOXY)			
Subtotal w/o Rail	5302 lb		
Subtotal Rail Only	341 lb		
TOTAL	5643 lb		

PLOTTED/REVISED: 11-JUN-2012 13:44
DISTRICT #: METRO
IPLOT NAME: d1901148_rw41
PATH & FILENAME: Projects/DM_ROS/013/1901/148/Design/Walls/RW4/d1901148_rw4.dgn

S.P. 179-020-031 S.P. 019-605-028

RWALL4 PANEL TABULATIONS

DRAWN BY: GJ | CHECKED BY: HS | CERTIFIED BY LICENSED PROFESSIONAL ENGINEER LIC. NO. 18520 DATE 6/18/12

STEM HEIGHT:	AT HIGH END= 20'-0"	AT LOW END = 19'-0"
2-ft L.L. SURCHARGE	Panel: E	PANEL LENGTH = 30'-6"

Bar	Mark	No.	Length	A	Location	Weight
SPREAD FOOTING REINFORCEMENT						
A	F1601	22	32'-11"	STR.	LONG T & B	755
B	F1902	31	10'-2"	STR.	TRANS BOT	473
C	F2203	31	10'-2"	STR.	TRANS TOP	644
FOOTING DOWELS & STEM REINFORCEMENT						
D	F1604E	31	3'-0"	STR.	DOWEL FF	97
E	F2505E	31	12'-10"	6'-1"	DOWEL BF	1062
F	F2506E	30	8'-9"	7'-9"	DOWEL BF	701
G	S1301E	31	17'-3"	STR.	VERT FF	357
H	S1902E	31	17'-3"	STR.	VERT BF	803
J	S1903E	30	10'-3"	STR.	VERT BF	462
K	S1604E	31	10'-7"	4'-9"	TIE	342
L	S1305E	40	30'-0"	STR.	HORIZ EF	802
M	S1606E	20	7'-4"	1'-4"	EXP JT TIE	153
N	S1607E	20	7'-9"	1'-9"	EXP JT TIE	162
P	S1608E	-----	8'-2"	2'-2"	EXP JT TIE	-----
Q	S1609E	38	8'-7"	4'-0"	RAIL DOWEL	341
Q	-----	-----	-----	-----	F-RAILDOWEL	-----

Dimensions and quantities

DIMENSIONS			
SPREAD FOOTING			
b	4'-3"	e	1'-0"
c	2'-0"	f	6'-3"
d	10'-8"	g	4' 5- 5/16"
STEM			
a	2'-4"		
j	1' 11- 3/16"		

QUANTITIES	
STRUCTURAL CONCRETE (1A43)	
(FOOTING)	
SPREAD	26.7 cu.yd.
STRUCTURAL CONCRETE (3Y43)	
(STEM)	
	42.2 cu.yd.
REINFORCEMENT (PLAIN)	
SPREAD	1872 lb
REINFORCEMENT (EPOXY)	
Subtotal w/o Rail	4941 lb
Subtotal Rail Only	341 lb
TOTAL	5282 lb

STEM HEIGHT:	AT HIGH END= 19'-0"	AT LOW END = 17'-0"
2-ft L.L. SURCHARGE	Panel: F	PANEL LENGTH = 30'-6"

Bar	Mark	No.	Length	A	Location	Weight
SPREAD FOOTING REINFORCEMENT						
A	F1601	22	32'-11"	STR.	LONG T & B	755
B	F1902	31	9'-8"	STR.	TRANS BOT	450
C	F1903	31	9'-8"	STR.	TRANS TOP	450
FOOTING DOWELS & STEM REINFORCEMENT						
D	F1604E	31	3'-0"	STR.	DOWEL FF	97
E	F2205E	31	14'-0"	5'-9"	DOWEL BF	887
F	F2206E	30	10'-3"	9'-3"	DOWEL BF	629
G	S1301E	31	16'-3"	STR.	VERT FF	337
H	S1602E	31	16'-3"	STR.	VERT BF	525
J	S1603E	30	11'-3"	STR.	VERT BF	352
K	S1604E	31	10'-7"	4'-9"	TIE	342
L	S1305E	38	30'-0"	STR.	HORIZ EF	762
M	S1606E	20	7'-4"	1'-4"	EXP JT TIE	153
N	S1607E	18	7'-9"	1'-9"	EXP JT TIE	145
P	S1608E	-----	8'-2"	2'-2"	EXP JT TIE	-----
Q	S1609E	38	8'-7"	4'-0"	RAIL DOWEL	341
Q	-----	-----	-----	-----	F-RAILDOWEL	-----

Dimensions and quantities

DIMENSIONS			
SPREAD FOOTING			
b	4'-0"	e	1'-0"
c	2'-0"	f	5' 11-1/2"
d	10'-2"	g	4' 2- 5/16"
STEM			
a	2' 3-1/2"		
j	1' 10-3/4"		

QUANTITIES	
STRUCTURAL CONCRETE (1A43)	
(FOOTING)	
SPREAD	24.7 cu.yd.
STRUCTURAL CONCRETE (3Y43)	
(STEM)	
	38.5 cu.yd.
REINFORCEMENT (PLAIN)	
SPREAD	1655 lb
REINFORCEMENT (EPOXY)	
Subtotal w/o Rail	4229 lb
Subtotal Rail Only	341 lb
TOTAL	4570 lb

STEM HEIGHT:	AT HIGH END= 17'-0"	AT LOW END = 16'-0"
2-ft L.L. SURCHARGE	Panel: G	PANEL LENGTH = 30'-6"

Bar	Mark	No.	Length	A	Location	Weight
SPREAD FOOTING REINFORCEMENT						
A	F1601	20	32'-11"	STR.	LONG T & B	687
B	F1902	31	8'-8"	STR.	TRANS BOT	404
C	F1903	31	8'-8"	STR.	TRANS TOP	404
FOOTING DOWELS & STEM REINFORCEMENT						
D	F1604E	31	3'-0"	STR.	DOWEL FF	97
E	F1905E	31	11'-5"	5'-2"	DOWEL BF	532
F	F1906E	30	8'-0"	7'-0"	DOWEL BF	360
G	S1301E	31	14'-3"	STR.	VERT FF	295
H	S1602E	31	14'-3"	STR.	VERT BF	461
J	S1603E	30	9'-3"	STR.	VERT BF	289
K	S1604E	31	10'-7"	4'-9"	TIE	342
L	S1305E	34	30'-0"	STR.	HORIZ EF	681
M	S1606E	20	7'-4"	1'-4"	EXP JT TIE	153
N	S1607E	14	7'-9"	1'-9"	EXP JT TIE	113
P	S1608E	-----	8'-2"	2'-2"	EXP JT TIE	-----
Q	S1609E	38	8'-7"	4'-0"	RAIL DOWEL	341
Q	-----	-----	-----	-----	F-RAILDOWEL	-----

Dimensions and quantities

DIMENSIONS			
SPREAD FOOTING			
b	3'-6"	e	1'-0"
c	1'-9"	f	5' 4-3/8"
d	9'-2"	g	3' 8- 5/16"
STEM			
a	2' 2-1/2"		
j	1' 9-13/16"		

QUANTITIES	
STRUCTURAL CONCRETE (1A43)	
(FOOTING)	
SPREAD	19.8 cu.yd.
STRUCTURAL CONCRETE (3Y43)	
(STEM)	
	34.6 cu.yd.
REINFORCEMENT (PLAIN)	
SPREAD	1495 lb
REINFORCEMENT (EPOXY)	
Subtotal w/o Rail	3323 lb
Subtotal Rail Only	341 lb
TOTAL	3664 lb

STEM HEIGHT:	AT HIGH END= 16'-0"	AT LOW END = 14'-0"
2-ft L.L. SURCHARGE	Panel: H	PANEL LENGTH = 30'-6"

Bar	Mark	No.	Length	A	Location	Weight
SPREAD FOOTING REINFORCEMENT						
A	F1601	18	32'-11"	STR.	LONG T & B	618
B	F1902	31	8'-2"	STR.	TRANS BOT	380
C	F1603	31	8'-2"	STR.	TRANS TOP	264
FOOTING DOWELS & STEM REINFORCEMENT						
D	F1604E	31	3'-0"	STR.	DOWEL FF	97
E	F1905E	31	10'-2"	4'-11"	DOWEL BF	473
F	F1906E	30	7'-0"	6'-0"	DOWEL BF	315
G	S1301E	31	13'-3"	STR.	VERT FF	274
H	S1602E	31	13'-3"	STR.	VERT BF	428
J	S1603E	30	8'-3"	STR.	VERT BF	258
K	S1604E	31	10'-7"	4'-9"	TIE	342
L	S1305E	32	30'-0"	STR.	HORIZ EF	641
M	S1606E	20	7'-4"	1'-4"	EXP JT TIE	153
N	S1607E	12	7'-9"	1'-9"	EXP JT TIE	97
P	S1608E	-----	8'-2"	2'-2"	EXP JT TIE	-----
Q	S1609E	38	8'-7"	4'-0"	RAIL DOWEL	341
Q	-----	-----	-----	-----	F-RAILDOWEL	-----

Dimensions and quantities

DIMENSIONS			
SPREAD FOOTING			
b	3'-3"	e	1'-0"
c	1'-9"	f	5' 0-7/8"
d	8'-8"	g	3' 5- 5/16"
STEM			
a	2'-2"		
j	1' 9- 5/16"		

QUANTITIES	
STRUCTURAL CONCRETE (1A43)	
(FOOTING)	
SPREAD	18.8 cu.yd.
STRUCTURAL CONCRETE (3Y43)	
(STEM)	
	31.1 cu.yd.
REINFORCEMENT (PLAIN)	
SPREAD	1262 lb
REINFORCEMENT (EPOXY)	
Subtotal w/o Rail	3078 lb
Subtotal Rail Only	341 lb
TOTAL	3419 lb

S.P. 179-020-031 S.P. 019-605-028

SHEET 2 OF 4

RWALL4 PANEL TABULATIONS

DRAWN BY: GJ | CHECKED BY: HS | CERTIFIED BY _____ LICENSED PROFESSIONAL ENGINEER LIC. NO. 18520 DATE 6/18/12

STATE PROJ. NO. 1901-148 (T.H. 13) SHEET NO. 298 OF 442 SHEETS

PLOTTED/REVISED: 11-JUN-2012 13:44
DISTRICT #: METRO
IPLOT NAME: d190148_rw44
PATH & FILENAME: Projects/DM_ROS/013/1901/148/Design/Walls/RW4/d190148_rw4.dgn

STEM HEIGHT:	AT HIGH END= 14'-0"	AT LOW END = 13'-0"
2-ft L.L. SURCHARGE	Panel: I	PANEL LENGTH = 30'-6"

Bar	Mark	No.	Length	A	Location	Weight
SPREAD FOOTING REINFORCEMENT						
A	F1601	16	32'-11"	STR.	LONG T & B	549
B	F2202	31	7'-2"	STR.	TRANS BOT	454
C	F1603	31	7'-2"	STR.	TRANS TOP	232
FOOTING DOWELS & STEM REINFORCEMENT						
D	F1604E	31	3'-0"	STR.	DOWEL FF	97
E	F1605E	31	8'-10"	0'-10"	DOWEL BF	286
F	F1606E	30	9'-6"	8'-6"	DOWEL BF	297
G	S1301E	31	11'-3"	STR.	VERT FF	233
H	S1602E	31	11'-3"	STR.	VERT BF	364
J	S 03E	-----	-----	STR.	VERT BF	-----
K	S1604E	31	10'-7"	4'-9"	TIE	342
L	S1305E	28	30'-0"	STR.	HORIZ EF	561
M	S1606E	20	7'-4"	1'-4"	EXP JT TIE	153
N	S1607E	8	7'-9"	1'-9"	EXP JT TIE	65
P	S1608E	-----	8'-2"	2'-2"	EXP JT TIE	-----
Q	S1609E	38	8'-7"	4'-0"	RAIL DOWEL	341
Q	-----	-----	-----	-----	F-RAILDOWEL	-----

Dimensions and quantities

DIMENSIONS			
SPREAD FOOTING			
b	2'-9"	e	1'-0"
c	1'-6"	f	4' 5-3/4"
d	7'-8"	g	2' 11- 5/16"

STEM			
a	2'-1"		
j	1' 8-3/8"		

QUANTITIES		
STRUCTURAL CONCRETE (1A43)		
(FOOTING)		
SPREAD	14.5	cu.yd.
STRUCTURAL CONCRETE (3Y43)		
(STEM)		
	27.3	cu.yd.
REINFORCEMENT (PLAIN)		
SPREAD	1235	lb
REINFORCEMENT (EPOXY)		
Subtotal w/o Rail	2398	lb
Subtotal Rail Only	341	lb
TOTAL	2739	lb

STEM HEIGHT:	AT HIGH END= 13'-0"	AT LOW END = 12'-0"
2-ft L.L. SURCHARGE	Panel: J	PANEL LENGTH = 30'-6"

Bar	Mark	No.	Length	A	Location	Weight
SPREAD FOOTING REINFORCEMENT						
A	F1601	14	32'-11"	STR.	LONG T & B	481
B	F2502	31	6'-6"	STR.	TRANS BOT	538
C	F1603	31	6'-6"	STR.	TRANS TOP	210
FOOTING DOWELS & STEM REINFORCEMENT						
D	F1604E	31	3'-0"	STR.	DOWEL FF	97
E	F1605E	31	7'-10"	0'-10"	DOWEL BF	253
F	F1606E	30	8'-3"	7'-3"	DOWEL BF	258
G	S1301E	31	10'-3"	STR.	VERT FF	212
H	S1602E	31	10'-3"	STR.	VERT BF	331
J	S 03E	-----	-----	STR.	VERT BF	-----
K	S1604E	31	10'-7"	4'-9"	TIE	342
L	S1305E	26	30'-0"	STR.	HORIZ EF	521
M	S1606E	20	7'-4"	1'-4"	EXP JT TIE	153
N	S1607E	6	7'-9"	1'-9"	EXP JT TIE	48
P	S1608E	-----	8'-2"	2'-2"	EXP JT TIE	-----
Q	S1609E	38	8'-7"	4'-0"	RAIL DOWEL	341
Q	-----	-----	-----	-----	F-RAILDOWEL	-----

Dimensions and quantities

DIMENSIONS			
SPREAD FOOTING			
b	2'-6"	e	1'-0"
c	1'-5"	f	4' 2-1/8"
d	7'-0"	g	2' 8- 5/16"

STEM			
a	2' 0-1/2"		
j	1' 7-7/8"		

QUANTITIES		
STRUCTURAL CONCRETE (1A43)		
(FOOTING)		
SPREAD	12.8	cu.yd.
STRUCTURAL CONCRETE (3Y43)		
(STEM)		
	25.0	cu.yd.
REINFORCEMENT (PLAIN)		
SPREAD	1229	lb
REINFORCEMENT (EPOXY)		
Subtotal w/o Rail	2215	lb
Subtotal Rail Only	341	lb
TOTAL	2556	lb

STEM HEIGHT:	AT HIGH END= 12'-0"	AT LOW END = 10'-0"
2-ft L.L. SURCHARGE	Panel: K	PANEL LENGTH = 30'-6"

Bar	Mark	No.	Length	A	Location	Weight
SPREAD FOOTING REINFORCEMENT						
A	F1601	14	32'-11"	STR.	LONG T & B	481
B	F2202	31	6'-3"	STR.	TRANS BOT	396
C	F1603	31	6'-3"	STR.	TRANS TOP	202
FOOTING DOWELS & STEM REINFORCEMENT						
D	F1604E	31	3'-0"	STR.	DOWEL FF	97
E	F1605E	31	6'-10"	0'-10"	DOWEL BF	221
F	F1606E	30	7'-3"	6'-3"	DOWEL BF	227
G	S1301E	31	9'-3"	STR.	VERT FF	192
H	S1602E	31	9'-3"	STR.	VERT BF	299
J	S 03E	-----	-----	STR.	VERT BF	-----
K	S1604E	31	10'-7"	4'-9"	TIE	342
L	S1305E	24	30'-0"	STR.	HORIZ EF	481
M	S1606E	20	7'-4"	1'-4"	EXP JT TIE	153
N	S1607E	4	7'-9"	1'-9"	EXP JT TIE	32
P	S1608E	-----	8'-2"	2'-2"	EXP JT TIE	-----
Q	S1609E	38	8'-7"	4'-0"	RAIL DOWEL	341
Q	-----	-----	-----	-----	F-RAILDOWEL	-----

Dimensions and quantities

DIMENSIONS			
SPREAD FOOTING			
b	2'-3"	e	1'-0"
c	1'-5"	f	3' 10-5/8"
d	6'-9"	g	2' 5- 5/16"

STEM			
a	2'-0"		
j	1' 7-3/8"		

QUANTITIES		
STRUCTURAL CONCRETE (1A43)		
(FOOTING)		
SPREAD	12.3	cu.yd.
STRUCTURAL CONCRETE (3Y43)		
(STEM)		
	21.7	cu.yd.
REINFORCEMENT (PLAIN)		
SPREAD	1079	lb
REINFORCEMENT (EPOXY)		
Subtotal w/o Rail	2044	lb
Subtotal Rail Only	341	lb
TOTAL	2385	lb

STEM HEIGHT:	AT HIGH END= 10'-0"	AT LOW END = 9'-0"
2-ft L.L. SURCHARGE	Panel: L	PANEL LENGTH = 30'-6"

Bar	Mark	No.	Length	A	Location	Weight
SPREAD FOOTING REINFORCEMENT						
A	F1601	12	32'-11"	STR.	LONG T & B	412
B	F1602	31	5'-6"	STR.	TRANS BOT	178
C	F1603	31	5'-6"	STR.	TRANS TOP	178
FOOTING DOWELS & STEM REINFORCEMENT						
D	F1604E	31	3'-0"	STR.	DOWEL FF	97
E	F1605E	31	4'-10"	0'-10"	DOWEL BF	156
F	F1606E	30	5'-0"	4'-0"	DOWEL BF	156
G	S1301E	31	7'-3"	STR.	VERT FF	150
H	S1602E	31	7'-3"	STR.	VERT BF	234
J	S 03E	-----	-----	STR.	VERT BF	-----
K	S1604E	31	10'-7"	4'-9"	TIE	342
L	S1305E	20	30'-0"	STR.	HORIZ EF	401
M	S1606E	20	7'-4"	1'-4"	EXP JT TIE	153
N	S1607E	-----	7'-9"	1'-9"	EXP JT TIE	-----
P	S1608E	-----	8'-2"	2'-2"	EXP JT TIE	-----
Q	S1609E	38	8'-7"	4'-0"	RAIL DOWEL	341
Q	-----	-----	-----	-----	F-RAILDOWEL	-----

Dimensions and quantities

DIMENSIONS			
SPREAD FOOTING			
b	1'-9"	e	-----
c	1'-5"	f	-----
d	6'-0"	g	1' 11- 5/16"

STEM			
a	1'-11"		
j	1' 6-3/8"		

QUANTITIES		
STRUCTURAL CONCRETE (1A43)		
(FOOTING)		
SPREAD	9.9	cu.yd.
STRUCTURAL CONCRETE (3Y43)		
(STEM)		
	18.3	cu.yd.
REINFORCEMENT (PLAIN)		
SPREAD	768	lb
REINFORCEMENT (EPOXY)		
Subtotal w/o Rail	1689	lb
Subtotal Rail Only	341	lb
TOTAL	2030	lb

S.P. 179-020-031 S.P. 019-605-028

SHEET 3 OF 4

RWALL4 PANEL TABULATIONS

DRAWN BY: GJ | CHECKED BY: HS | CERTIFIED BY LICENSED PROFESSIONAL ENGINEER LIC. NO. 18520 DATE 6/18/12

STATE PROJ. NO. 1901-148 (T.H. 13) SHEET NO. 299 OF 442 SHEETS

PLOTTED/REVISED: 11-JUN-2012 13:44
DISTRICT #: METRO
IPLOT NAME: d190ll48_rw42
PATH & FILENAME: Projects/DM_ROS/013/1901/148/Design/Walls/RW4/d190ll48_rw4.dgn

STEM HEIGHT:	AT HIGH END= 9'-0"	AT LOW END = 8'-0"
2-ft L.L. SURCHARGE	Panel: M	PANEL LENGTH = 30'-6"

Bar	Mark	No.	Length	A	Location	Weight
SPREAD FOOTING REINFORCEMENT						
A	F1601	12	32'-11"	STR.	LONG T & B	412
B	F1602	31	5'-0"	STR.	TRANS BOT	162
C	F1603	31	5'-0"	STR.	TRANS TOP	162
FOOTING DOWELS & STEM REINFORCEMENT						
D	F1604E	31	3'-0"	STR.	DOWEL FF	97
E	F1605E	16	4'-4"	0'-10"	DOWEL BF	72
F	F1606E	15	4'-6"	3'-6"	DOWEL BF	70
G	S1301E	31	7'-6"	STR.	VERT FF	155
H	S1602E	31	8'-0"	STR.	VERT BF	259
J	S 03E	-----	-----	STR.	VERT BF	-----
K	S1604E	31	7'-1"	3'-0"	TIE	229
L	S1305E	18	30'-0"	STR.	HORIZ EF	361
M	S1606E	18	7'-4"	1'-4"	EXP JT TIE	138
N	S1607E	-----	7'-9"	1'-9"	EXP JT TIE	-----
P	S1608E	-----	8'-2"	2'-2"	EXP JT TIE	-----
Q	S1609E	38	8'-7"	4'-0"	RAIL DOWEL	341
Q	-----	-----	-----	-----	F-RAILDOWEL	-----

Dimensions and quantities			
DIMENSIONS			
SPREAD FOOTING			
b	1'-8"	e	-----
c	1'-5"	f	-----
d	5'-6"	g	1' 10- 5/16"
STEM			
a	1' 10-1/2"		
j	1' 5-7/8"		
QUANTITIES			
STRUCTURAL CONCRETE (1A43)			
(FOOTING)			
SPREAD	9.1	cu.yd.	
STRUCTURAL CONCRETE (3Y43)			
(STEM)			
	16.2	cu.yd.	
REINFORCEMENT (PLAIN)			
SPREAD	736	lb	
REINFORCEMENT (EPOXY)			
Subtotal w/o Rail	1381 lb		
Subtotal Rail Only	341 lb		
TOTAL	1722 lb		

STEM HEIGHT:	AT HIGH END= 8'-0"	AT LOW END = 7'-0"
2-ft L.L. SURCHARGE	Panel: N	PANEL LENGTH = 30'-6"

Bar	Mark	No.	Length	A	Location	Weight
SPREAD FOOTING REINFORCEMENT						
A	F1601	10	32'-11"	STR.	LONG T & B	343
B	F1602	31	4'-6"	STR.	TRANS BOT	145
C	F1603	31	4'-6"	STR.	TRANS TOP	145
FOOTING DOWELS & STEM REINFORCEMENT						
D	F1604E	31	3'-0"	STR.	DOWEL FF	97
E	F1605E	16	4'-1"	0'-10"	DOWEL BF	68
F	F1606E	15	4'-3"	3'-3"	DOWEL BF	66
G	S1301E	31	6'-6"	STR.	VERT FF	135
H	S1602E	31	7'-0"	STR.	VERT BF	226
J	S 03E	-----	-----	STR.	VERT BF	-----
K	S1604E	31	7'-1"	3'-0"	TIE	229
L	S1305E	16	30'-0"	STR.	HORIZ EF	321
M	S1606E	16	7'-4"	1'-4"	EXP JT TIE	122
N	S1607E	-----	7'-9"	1'-9"	EXP JT TIE	-----
P	S1608E	-----	8'-2"	2'-2"	EXP JT TIE	-----
Q	S1609E	38	8'-7"	4'-0"	RAIL DOWEL	341
Q	-----	-----	-----	-----	F-RAILDOWEL	-----

Dimensions and quantities			
DIMENSIONS			
SPREAD FOOTING			
b	1'-6"	e	-----
c	1'-5"	f	-----
d	5'-0"	g	1' 8- 5/16"
STEM			
a	1'-10"		
j	1' 5-3/8"		
QUANTITIES			
STRUCTURAL CONCRETE (1A43)			
(FOOTING)			
SPREAD	8.3	cu.yd.	
STRUCTURAL CONCRETE (3Y43)			
(STEM)			
	14.1	cu.yd.	
REINFORCEMENT (PLAIN)			
SPREAD	633	lb	
REINFORCEMENT (EPOXY)			
Subtotal w/o Rail	1264 lb		
Subtotal Rail Only	341 lb		
TOTAL	1605 lb		

STEM HEIGHT:	AT HIGH END= 7'-0"	AT LOW END = 6'-0"
2-ft L.L. SURCHARGE	Panel: O	PANEL LENGTH = 30'-6"

Bar	Mark	No.	Length	A	Location	Weight
SPREAD FOOTING REINFORCEMENT						
A	F1601	10	32'-11"	STR.	LONG T & B	343
B	F1602	31	4'-0"	STR.	TRANS BOT	129
C	F1603	31	4'-0"	STR.	TRANS TOP	129
FOOTING DOWELS & STEM REINFORCEMENT						
D	F1604E	31	3'-0"	STR.	DOWEL FF	97
E	F1605E	16	4'-1"	0'-10"	DOWEL BF	68
F	F1606E	15	4'-3"	3'-3"	DOWEL BF	66
G	S1301E	31	5'-6"	STR.	VERT FF	114
H	S1602E	31	6'-0"	STR.	VERT BF	194
J	S 03E	-----	-----	STR.	VERT BF	-----
K	S1604E	31	7'-1"	3'-0"	TIE	229
L	S1305E	14	30'-0"	STR.	HORIZ EF	281
M	S1606E	14	7'-4"	1'-4"	EXP JT TIE	107
N	S1607E	-----	7'-9"	1'-9"	EXP JT TIE	-----
P	S1608E	-----	8'-2"	2'-2"	EXP JT TIE	-----
Q	S1609E	38	8'-7"	4'-0"	RAIL DOWEL	341
Q	-----	-----	-----	-----	F-RAILDOWEL	-----

Dimensions and quantities			
DIMENSIONS			
SPREAD FOOTING			
b	1'-4"	e	-----
c	1'-5"	f	-----
d	4'-6"	g	1' 6- 5/16"
STEM			
a	1' 9-1/2"		
j	1' 4-7/8"		
QUANTITIES			
STRUCTURAL CONCRETE (1A43)			
(FOOTING)			
SPREAD	7.4	cu.yd.	
STRUCTURAL CONCRETE (3Y43)			
(STEM)			
	12.1	cu.yd.	
REINFORCEMENT (PLAIN)			
SPREAD	601	lb	
REINFORCEMENT (EPOXY)			
Subtotal w/o Rail	1156 lb		
Subtotal Rail Only	341 lb		
TOTAL	1497 lb		

STEM HEIGHT:	AT HIGH END= 6'-0"	AT LOW END = 5'-0"
2-ft L.L. SURCHARGE	Panel: P	PANEL LENGTH = 30'-6"

Bar	Mark	No.	Length	A	Location	Weight
SPREAD FOOTING REINFORCEMENT						
A	F1601	8	32'-11"	STR.	LONG T & B	275
B	F1602	31	3'-6"	STR.	TRANS BOT	113
C	F1603	31	3'-6"	STR.	TRANS TOP	113
FOOTING DOWELS & STEM REINFORCEMENT						
D	F1604E	31	3'-0"	STR.	DOWEL FF	97
E	F1605E	16	4'-1"	0'-10"	DOWEL BF	68
F	F1606E	15	4'-3"	3'-3"	DOWEL BF	66
G	S1301E	31	4'-6"	STR.	VERT FF	93
H	S1602E	31	5'-0"	STR.	VERT BF	162
J	S 03E	-----	-----	STR.	VERT BF	-----
K	S1604E	31	7'-1"	3'-0"	TIE	229
L	S1305E	12	30'-0"	STR.	HORIZ EF	240
M	S1606E	12	7'-4"	1'-4"	EXP JT TIE	92
N	S1607E	-----	7'-9"	1'-9"	EXP JT TIE	-----
P	S1608E	-----	8'-2"	2'-2"	EXP JT TIE	-----
Q	S1609E	38	8'-7"	4'-0"	RAIL DOWEL	341
Q	-----	-----	-----	-----	F-RAILDOWEL	-----

Dimensions and quantities			
DIMENSIONS			
SPREAD FOOTING			
b	1'-2"	e	-----
c	1'-5"	f	-----
d	4'-0"	g	1' 4- 5/16"
STEM			
a	1'-9"		
j	1' 4-3/8"		
QUANTITIES			
STRUCTURAL CONCRETE (1A43)			
(FOOTING)			
SPREAD	6.6	cu.yd.	
STRUCTURAL CONCRETE (3Y43)			
(STEM)			
	10.1	cu.yd.	
REINFORCEMENT (PLAIN)			
SPREAD	501	lb	
REINFORCEMENT (EPOXY)			
Subtotal w/o Rail	1047 lb		
Subtotal Rail Only	341 lb		
TOTAL	1388 lb		

PLOTTED/REVISED: 11-JUN-2012 13:44
DISTRICT #: METRO
IPLOT NAME: d1901148_rw43
PATH & FILENAME: Projects/DM_ROS/013/1901/148/Design/Walls/RW4/d1901148_rw4.dgn

S.P. 179-020-031 S.P. 019-605-028

SHEET 4 OF 4

RWALL4 PANEL TABULATIONS

DRAWN BY: GJ | CHECKED BY: HS | CERTIFIED BY LICENSED PROFESSIONAL ENGINEER | LIC. NO. 18520 DATE 6/18/12

STATE PROJ. NO. 1901-148 (T.H. 13) SHEET NO. 300 OF 442 SHEETS

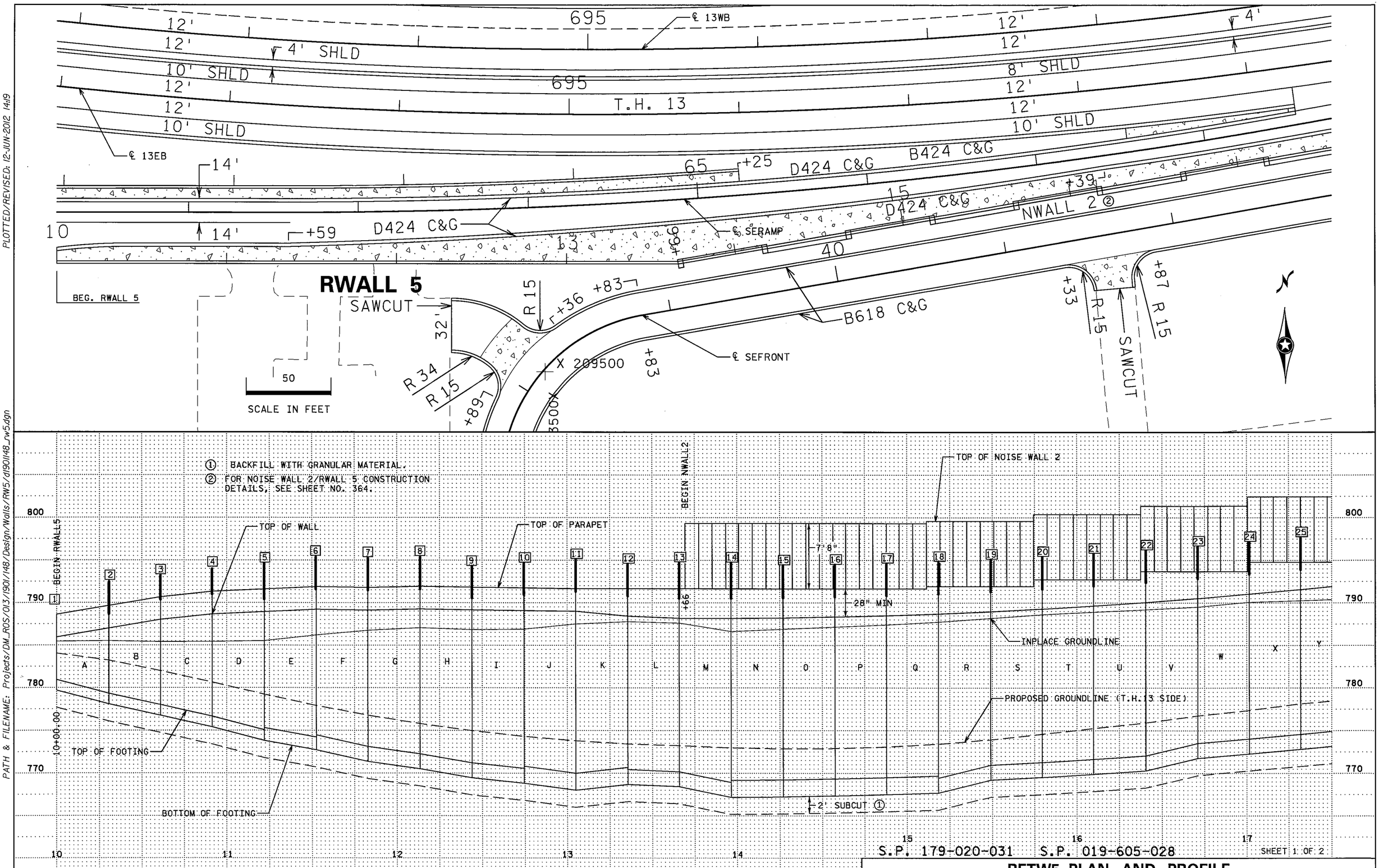

DISTRICT #: METRO
IPLOT NAME: d190l148_rw5
PATH & FILENAME: Projects/DM_ROS/013/1901/148/Design/Walls/RW5/d190l148_rw5.dgn

PLOTTED/REVISED: 12-JUN-2012 14:19

RETW5 PLAN AND PROFILE

DRAWN BY: GJ	CHECKED BY: HS	CERTIFIED BY _____ LICENSED PROFESSIONAL ENGINEER	LIC. NO. 18520 DATE 6/18/12

STATE PROJ. NO. 1901-148 (T.H. 13) SHEET NO. 301 OF 442 SHEETS

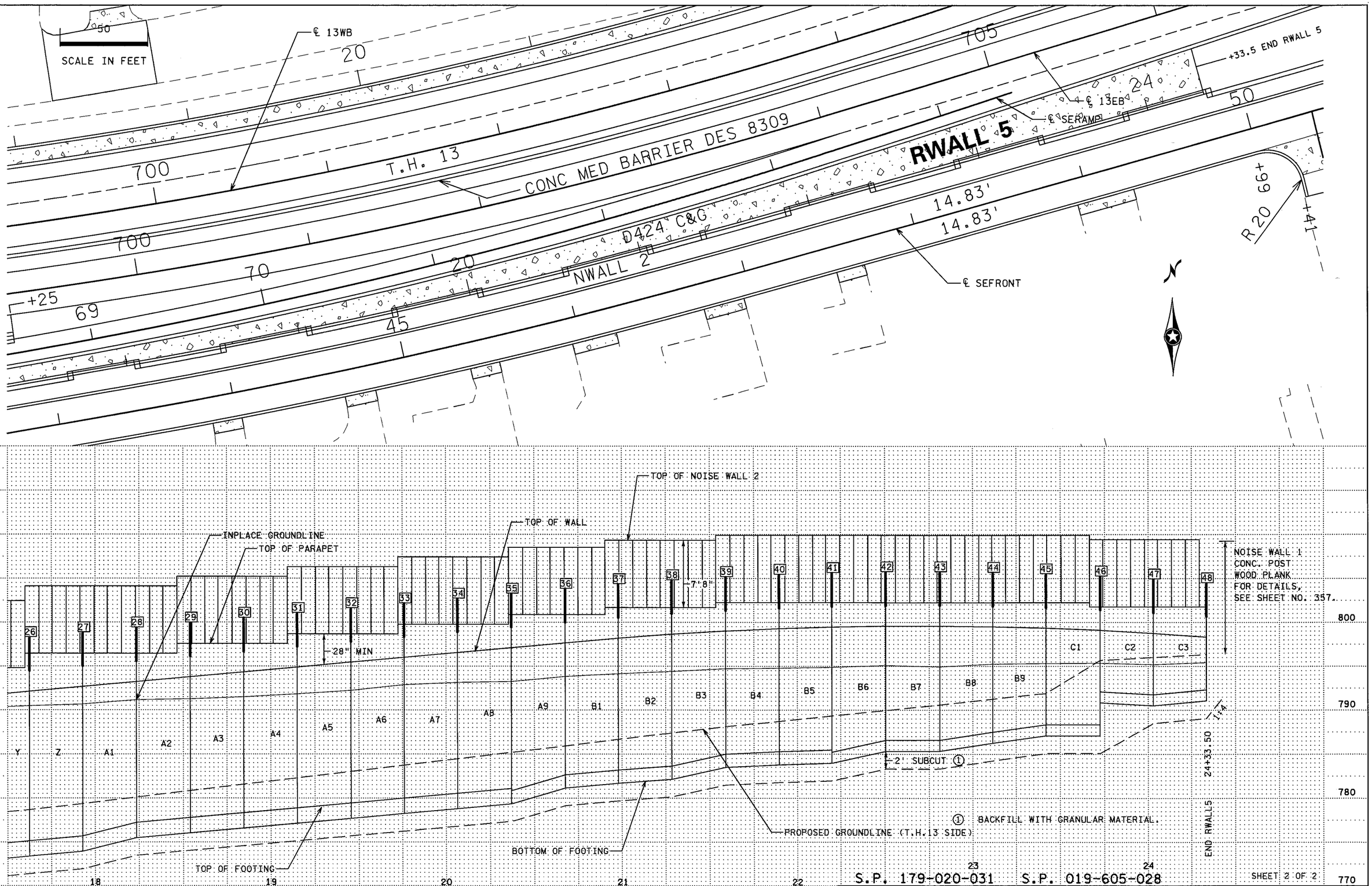

DISTRICT *: METRO
IPLOT NAME: d1901148_rw5
PATH & FILENAME: Projects/DM_ROS/013/1901/148/Design/Walls/RW5/d1901148_rw5.dgn

PLOTTED/REVISED: 12-JUN-2012 14:20

RETW5 PLAN AND PROFILE

DRAWN BY: GJ	CHECKED BY: HS	CERTIFIED BY [signature] LICENSED PROFESSIONAL ENGINEER	LIC. NO. 18520 DATE 6/18/12	STATE PROJ. NO. 1901-148 (T.H. 13) SHEET NO. 302 OF 442 SHEETS

RETAINING WALL RETW5

LIVE LOAD SURCHARGE - SPECIAL DESIGN

JOINT NO.	STATION	X	Y	PROPOSED GROUND LINE	TOP OF WALL	TOP OF FOOTING HEEL	BOTTOM OF FOOTING	WALL HEIGHT	PANEL LENGTH	PANEL NAME
1	10+00.00	503212.741	209560.792	784.041	785.948	780.948	779.698	5.000		
2	10+30.50	503243.135	209563.216	783.220	787.000	779.331	778.081	7.669	30.50	A
3	10+61.00	503273.632	209563.443	781.991	788.008	778.008	776.758	10.000	30.50	B
4	10+91.50	503304.132	209563.443	780.653	788.649	776.649	775.399	12.000	30.50	C
5	11+22.00	503334.632	209563.443	779.226	788.900	775.053	773.803	13.847	30.50	D
6	11+52.50	503365.132	209563.443	777.926	789.213	774.213	772.713	15.000	30.50	E
7	11+83.00	503395.632	209563.443	776.791	789.121	773.121	771.371	16.000	30.50	F
8	12+13.50	503426.132	209563.443	775.810	789.250	772.250	770.500	17.000	30.50	G
9	12+44.00	503456.632	209563.443	774.984	789.200	771.194	769.444	18.000	30.50	H
10	12+74.50	503487.132	209563.443	774.313	789.100	770.559	768.809	18.541	30.50	I
11	13+05.00	503517.632	209563.443	773.797	788.990	769.990	767.990	19.000	30.50	J
12	13+35.50	503548.132	209563.443	773.437	789.432	770.432	768.682	19.000	30.50	K
13	13+66.00	503578.632	209563.443	773.233	788.166	770.166	768.416	18.000	30.50	L
14	13+96.50	503608.687	209568.630	772.988	788.165	769.165	767.165	19.000	30.50	M
15	14+27.00	503638.739	209573.836	772.866	788.222	769.222	767.222	19.000	30.50	N
16	14+57.50	503668.791	209579.042	772.901	788.330	769.330	767.330	19.000	30.50	O
17	14+88.00	503698.844	209584.247	773.092	788.489	769.489	767.489	19.000	30.50	P
18	15+18.50	503728.896	209589.453	773.439	788.699	769.699	767.699	19.000	30.50	Q
19	15+49.00	503758.949	209594.659	773.942	788.959	770.959	769.209	18.000	30.50	R
20	15+79.50	503789.001	209599.864	774.581	789.271	771.271	769.521	18.000	30.50	S
21	16+10.00	503819.054	209605.070	775.249	789.633	771.633	769.883	18.000	30.50	T
22	16+40.50	503849.106	209610.276	775.919	790.046	772.046	770.296	18.000	30.50	U
23	16+71.00	503879.159	209615.482	776.761	790.511	773.511	771.761	17.000	30.50	V
24	17+01.50	503909.211	209620.687	777.374	791.025	774.025	772.275	17.000	30.50	W
25	17+32.00	503939.264	209625.893	778.154	791.574	774.574	772.824	17.000	30.50	X
26	17+62.50	503969.316	209631.099	778.675	792.123	775.123	773.373	17.000	30.50	Y
27	17+93.00	503999.368	209636.308	779.360	792.672	775.672	773.922	17.000	30.50	Z
28	18+23.50	504029.391	209641.688	780.115	793.226	777.226	775.476	16.000	30.50	A1
29	18+54.00	504059.365	209647.332	780.837	793.779	777.779	776.029	16.000	30.50	A2
30	18+84.50	504089.289	209653.238	781.561	794.332	778.332	776.582	16.000	30.50	A3
31	19+15.00	504119.159	209659.408	782.287	794.885	778.885	777.135	16.000	30.50	A4
32	19+45.50	504148.974	209665.839	783.014	795.438	779.438	777.688	16.000	30.50	A5
33	19+76.00	504178.732	209672.531	783.744	794.241	778.241	778.241	16.000	30.50	A6
34	20+06.50	504208.430	209679.485	784.475	794.794	778.794	778.794	16.000	30.50	A7
35	20+37.00	504238.065	209686.699	785.206	795.347	779.347	779.347	16.000	30.50	A8
36	20+67.50	504267.636	209694.173	785.940	797.150	781.150	781.150	16.000	30.50	A9
37	20+98.00	504297.141	209701.907	786.676	796.687	781.687	781.687	15.000	30.50	B1
38	21+28.50	504326.576	209709.899	787.413	797.142	782.142	782.142	15.000	30.50	B2
39	21+59.00	504355.958	209718.082	788.132	798.505	783.505	783.505	15.000	30.50	B3
40	21+89.50	504385.337	209726.275	788.723	797.781	783.781	783.781	14.000	30.50	B4
41	22+20.00	504414.716	209734.468	789.334	797.968	783.968	783.968	14.000	30.50	B5
42	22+50.50	504444.095	209742.661	789.966	798.318	785.318	785.318	13.000	30.50	B6
43	22+81.00	504423.474	209750.854	790.607	798.330	785.330	785.330	13.000	30.50	B7
44	23+11.50	504502.853	209759.047	791.256	798.254	786.254	786.254	12.000	30.50	B8
45	23+42.00	504532.232	209767.240	791.912	798.091	787.091	787.091	11.000	30.50	B9
46	23+72.50	504561.611	209775.433	795.686	797.840	790.840	790.840	7.000	30.50	C1
47	24+03.00	504590.990	209783.626	796.007	797.501	790.501	790.501	7.000	30.50	C2
48	24+33.50	504620.357	209791.816	796.353	797.076	791.076	791.076	6.000	30.50	C3

① FOR DETAILS, SEE SHEET NO. 342.

SUMMARY OF QUANTITIES FOR RETAINING WALL RETW5

(STANDARD MN/DOT CANTILEVER DESIGN)

PANEL	STRUCTURAL CONCRETE		REINFORCEMENT BARS		TYPE P-1(TL-2) RAILING CONCRETE (3Y46) ①	ARCHITECTURAL CONCRETE TEXTURE (RANDOM BATTEN)	ARCHITECTURAL SURFACE FINISH (SINGLE COLOR)
	1A43 (FOOTING)	3Y43 (STEM)	PLAIN (WALL)	EPOXY (WALL)			
	CU YD	CU YD	LB	LB	LIN FT	SQ FT	SQ FT
A	14.0	12.0	1249	1656	30.5	86.7	381.0
B	14.0	17.1	1249	2001	30.5	149.4	457.2
C	14.0	21.5	1384	2227	30.5	213.7	523.6
D	15.6	26.0	1384	2612	30.5	269.9	581.3
E	15.6	29.5	1384	2839	30.5	320.1	626.1
F	17.2	31.9	1249	3186	30.5	360.2	657.0
G	18.2	34.3	1500	3566	30.5	393.0	691.4
H	19.2	36.8	1548	3795	30.5	421.2	721.4
I	20.3	39.4	1849	4382	30.5	441.4	744.5
J	20.3	40.6	1849	4382	30.5	456.8	756.4
K	20.3	40.6	1849	4382	30.5	460.4	757.1
L	20.3	39.4	1849	4382	30.5	456.4	758.2
M	20.3	39.4	1849	4382	30.5	459.2	674.5
N	20.3	40.6	1849	4382	30.5	465.6	685.1
O	20.3	40.6	1849	4382	30.5	469.5	683.0
P	20.3	40.6	1849	4382	30.5	470.1	678.5
Q	20.3	40.6	1849	4382	30.5	467.5	672.9
R	20.3	39.4	1849	4382	30.5	461.7	662.9
S	19.2	38.1	1548	3795	30.5	453.0	635.1
T	19.2	38.1	1548	3795	30.5	443.4	648.4
U	19.2	38.1	1548	3795	30.5	434.8	636.6
V	19.2	36.8	1548	3795	30.5	425.1	637.8
W	18.2	35.6	1500	3566	30.5	417.9	607.6
X	18.2	35.6	1500	3566	30.5	412.8	624.9
Y	18.2	35.6	1500	3566	30.5	409.7	601.8
Z	18.2	35.6	1500	3566	30.5	408.1	642.2
A1	18.2	34.3	1500	3566	30.5	403.0	610.1
A2	17.2	33.1	1249	3186	30.5	397.3	578.0
A3	17.2	33.1	1249	3186	30.5	392.1	594.9
A4	17.2	33.1	1249	3186	30.5	386.9	578.0
A5	17.2	33.1	1249	3186	30.5	381.6	594.9
A6	17.2	33.1	1249	3186	30.5	376.2	578.0
A7	17.2	33.1	1249	3186	30.5	370.8	594.9
A8	17.2	33.1	1249	3186	30.5	365.4	578.0
A9	17.2	33.1	1249	3186	30.5	359.9	582.9
B1	17.2	31.9	1249	3186	30.5	354.1	547.2
B2	15.6	30.7	1384	2839	30.5	346.8	557.1
B3	15.6	30.7	1384	2839	30.5	337.1	529.3
B4	15.6	29.5	1384	2839	30.5	326.8	521.9
B5	15.6	28.3	1384	2612	30.5	315.6	514.8
B6	15.6	27.1	1384	2612	30.5	301.0	499.0
B7	14.0	26.0	1384	2368	30.5	283.3	478.2
B8	14.0	24.8	1384	2368	30.5	262.6	464.0
B9	14.0	22.6	1384	2227	30.5	239.1	437.1
C1	14.0	17.1	1384	2110	30.5	165.2	424.3
C2	14.0	13.0	1249	1548	30.5	93.8	300.2
C3	14.0	12.0	1249	1548	30.5	71.9	296.5
TOTALS	815.4	1484.6	69324.0	153296.0	1433.5	16758.1	27605.8

S.P. 179-020-031 S.P. 019-605-028

SHEET 1 OF 1

RETW5 TABULATIONS

DRAWN BY: GJ | CHECKED BY: HS | CERTIFIED BY [signature] LICENSED PROFESSIONAL ENGINEER | LIC. NO. 18520 DATE 6/18/12

STATE PROJ. NO. 1901-148 (T.H. 13) SHEET NO. 303 OF 442 SHEETS

DISTRICT #: METRO
IPLOT NAME: d190l148_rw5
PATH & FILENAME: Projects/DM_ROS/013/190l/148/Design/Walls/RW5/d190l148_rw5.dgn
PLOTTED/REVISED: 12-JUN-2012 14:20

BAR	MARK	NO.	LENGTH		LOCATION	WEIGHT	DIMENSIONS AND QUANTITIES			
h =7'8" 8' PANELS:				A			PANEL LENGTH =		30'-6"	
SPREAD FOOTING REINFORCEMENT							DIMENSIONS			
							SPREAD FOOTING			
A	F1601	18	32'-11"	STR.	LONG T & B	618				
B	F1602	31	8'-0"	STR.	TRANS BOT	259	b	2'-7"	e	-----
C	F1903	31	8'-0"	STR.	TRANS TOP	372	c	1'-5"	f	-----
							d	8'-6"	g	2' 9- 5/16"
							STEM			
							a	1'-10"	ke	2'-1"
							j	1' 5-3/8"	kf	0"
FOOTING DOWELS & STEM REINFORCEMENT							QUANTITIES			
D	F1604E	31	3'-0"	STR.	DOWEL FF	97	STRUCTURAL CONCRETE (1A43)			
E	F1605E	31	4'-4"	0'-10"	DOWEL BF	140	(FOOTING)			
F	F1606E	----	---	0'-0"	DOWEL BF	-----	SPREAD		14.0	CU YD
G	S1301E	31	4'-6"	STR.	VERT FF	93				
H	S1602E	31	4'-6"	STR.	VERT BF	145	STRUCTURAL CONCRETE (3Y43)			
J	S1603E	----	-----	STR.	VERT BF	-----	(STEM)			
K	S1604E	31	10'-7"	4'-6"	TIE	342			12.0	CU YD
L	S1305E	16	30'-0"	STR.	HORIZ EF	321	REINFORCEMENT (PLAIN)			
M	S1606E	16	7'-4"	1'-4"	EXP JT TIE	122	SPREAD		1249	LB
N	S1607E	-----	7'-9"	1'-9"	EXP JT TIE	-----				
P	S1608E	-----	8'-2"	2'-2"	EXP JT TIE	-----	REINFORCEMENT (EPOXY)			
Q	S1609E	38	9'-1"	4'-0"	RAIL DOWEL	360	1656			LB

BAR	MARK	NO.	LENGTH		LOCATION	WEIGHT	DIMENSIONS AND QUANTITIES			
h =10' 10' PANELS:				B			PANEL LENGTH =		30'-6"	
SPREAD FOOTING REINFORCEMENT							DIMENSIONS			
							SPREAD FOOTING			
A	F1601	18	32'-11"	STR.	LONG T & B	618				
B	F1602	31	8'-0"	STR.	TRANS BOT	259	b	2'-7"	e	-----
C	F1903	31	8'-0"	STR.	TRANS TOP	372	c	1'-5"	f	-----
							d	8'-6"	g	2' 9- 5/16"
							STEM			
							a	1'-11"	ke	2'-1"
							j	1' 6-3/8"	kf	1'-1/2"
FOOTING DOWELS & STEM REINFORCEMENT							QUANTITIES			
D	F1604E	31	3'-0"	STR.	DOWEL FF	97	STRUCTURAL CONCRETE (1A43)			
E	F1605E	31	4'-4"	0'-10"	DOWEL BF	140	(FOOTING)			
F	F1606E	30	4'-1"	3'-1"	DOWEL BF	128	SPREAD		14.0	CU YD
G	S1301E	31	7'-2"	STR.	VERT FF	148				
H	S1602E	31	7'-2"	STR.	VERT BF	232	STRUCTURAL CONCRETE (3Y43)			
J	S1603E	----	-----	STR.	VERT BF	-----	(STEM)			
K	S1604E	31	10'-7"	4'-6"	TIE	342			17.1	CU YD
L	S1305E	20	30'-0"	STR.	HORIZ EF	401	REINFORCEMENT (PLAIN)			
M	S1606E	20	7'-4"	1'-4"	EXP JT TIE	153	SPREAD		1249	LB
N	S1607E	-----	7'-9"	1'-9"	EXP JT TIE	-----				
P	S1608E	-----	8'-2"	2'-2"	EXP JT TIE	-----	REINFORCEMENT (EPOXY)			
Q	S1609E	38	9'-1"	4'-0"	RAIL DOWEL	360	2001			LB

BAR	MARK	NO.	LENGTH		LOCATION	WEIGHT	DIMENSIONS AND QUANTITIES			
h =12' 12' PANELS:				C			PANEL LENGTH =		30'-6"	
SPREAD FOOTING REINFORCEMENT							DIMENSIONS			
							SPREAD FOOTING			
A	F1601	18	32'-11"	STR.	LONG T & B	618				
B	F1602	31	8'-0"	STR.	TRANS BOT	259	b	2'-7"	e	-----
C	F2203	31	8'-0"	STR.	TRANS TOP	507	c	1'-5"	f	-----
							d	8'-6"	g	2' 9- 5/16"
							STEM			
							a	2'-0"	ke	2'-1"
							j	1' 7-3/8"	kf	2'-2 1/2"
FOOTING DOWELS & STEM REINFORCEMENT							QUANTITIES			
D	F1604E	31	3'-0"	STR.	DOWEL FF	97	STRUCTURAL CONCRETE (1A43)			
E	F1605E	31	4'-4"	0'-10"	DOWEL BF	140	(FOOTING)			
F	F1606E	30	4'-4"	3'-4"	DOWEL BF	136	SPREAD		14.0	CU YD
G	S1301E	31	9'-2"	STR.	VERT FF	190				
H	S1602E	31	9'-2"	STR.	VERT BF	296	STRUCTURAL CONCRETE (3Y43)			
J	S1603E	----	-----	STR.	VERT BF	-----	(STEM)			
K	S1604E	31	10'-7"	4'-6"	TIE	342			21.5	CU YD
L	S1305E	24	30'-0"	STR.	HORIZ EF	481	REINFORCEMENT (PLAIN)			
M	S1606E	20	7'-4"	1'-4"	EXP JT TIE	153	SPREAD		1384	LB
N	S1607E	4	7'-9"	1'-9"	EXP JT TIE	32				
P	S1608E	-----	8'-2"	2'-2"	EXP JT TIE	-----	REINFORCEMENT (EPOXY)			
Q	S1609E	38	9'-1"	4'-0"	RAIL DOWEL	360	2227			LB

BAR	MARK	NO.	LENGTH		LOCATION	WEIGHT	DIMENSIONS AND QUANTITIES			
h =13'10-7/8" 14' PANELS:				D			PANEL LENGTH =		30'-6"	
SPREAD FOOTING REINFORCEMENT							DIMENSIONS			
							SPREAD FOOTING			
A	F1601	18	32'-11"	STR.	LONG T & B	618				
B	F1602	31	8'-0"	STR.	TRANS BOT	259	b	2'-7"	e	-----
C	F2203	31	8'-0"	STR.	TRANS TOP	507	c	1'-7"	f	-----
							d	8'-6"	g	2' 9- 5/16"
							STEM			
							a	2'-1"	ke	2'-1"
							j	1' 8-3/8"	kf	3'-4"
FOOTING DOWELS & STEM REINFORCEMENT							QUANTITIES			
D	F1604E	31	3'-0"	STR.	DOWEL FF	97	STRUCTURAL CONCRETE (1A43)			
E	F1605E	31	4'-6"	0'-10"	DOWEL BF	145	(FOOTING)			
F	F1906E	30	6'-7"	5'-6"	DOWEL BF	297	SPREAD		15.6	CU YD
G	S1301E	31	11'-2"	STR.	VERT FF	231				
H	S1602E	31	11'-2"	STR.	VERT BF	361	STRUCTURAL CONCRETE (3Y43)			
J	S1603E	----	-----	STR.	VERT BF	-----	(STEM)			
K	S1604E	31	10'-7"	4'-6"	TIE	342			26.0	CU YD
L	S1305E	28	30'-0"	STR.	HORIZ EF	561	REINFORCEMENT (PLAIN)			
M	S1606E	20	7'-4"	1'-4"	EXP JT TIE	153	SPREAD		1384	LB
N	S1607E	8	7'-9"	1'-9"	EXP JT TIE	65				
P	S1608E	-----	8'-2"	2'-2"	EXP JT TIE	-----	REINFORCEMENT (EPOXY)			
Q	S1609E	38	9'-1"	4'-0"	RAIL DOWEL	360	2612			LB

S.P. 179-020-031 S.P. 019-605-028

SHEET 1 OF 12

RETW5 PANEL TABULATIONS

DRAWN BY: GJ | CHECKED BY: HS | CERTIFIED BY _____ LICENSED PROFESSIONAL ENGINEER LIC. NO. 18520 DATE 6/18/12

STATE PROJ. NO. 1901-148 (T.H. 13) SHEET NO. 304 OF 442 SHEETS

PLOTTED/REVISED: 13-JUN-2012 15:55
DISTRICT #: METRO
IPLOT NAME: d1901148_rw5
PATH & FILENAME: Projects/DM_ROS/013/1901/148/Design/Walls/RW5/d1901148_rw5.dgn

BAR	MARK	NO.	LENGTH		LOCATION	WEIGHT	DIMENSIONS AND QUANTITIES			
h =15'	15' PANELS:		E				PANEL LENGTH =		30'-6"	
SPREAD FOOTING REINFORCEMENT							DIMENSIONS			
							SPREAD FOOTING			
A	F1601	18	32'-11"	STR.	LONG T & B	618				
B	F1602	31	8'-0"	STR.	TRANS BOT	259	b	2'-7"	e	-----
C	F2203	31	8'-0"	STR.	TRANS TOP	507	c	1'-7"	f	-----
							STEM			
							a	2' 1-1/2"	ke	2'-1"
							j	1' 8-13/16"	kf	4'-10"
FOOTING DOWELS & STEM REINFORCEMENT							QUANTITIES			
D	F1604E	31	3'-0"	STR.	DOWEL FF	97	STRUCTURAL CONCRETE (1A43)			
E	F1905E	31	4'-8"	1'-0"	DOWEL BF	217	(FOOTING)			
F	F1906E	30	7'-7"	6'-6"	DOWEL BF	342	SPREAD		15.6	CU YD
G	S1301E	31	12'-2"	STR.	VERT FF	252				
H	S1602E	31	12'-2"	STR.	VERT BF	393	STRUCTURAL CONCRETE (3Y43)			
J	S1603E	----	-----	STR.	VERT BF	-----	(STEM)			
K	S1604E	31	10'-7"	4'-6"	TIE	342			29.5	CU YD
L	S1305E	30	30'-0"	STR.	HORIZ EF	601	REINFORCEMENT (PLAIN)			
M	S1606E	20	7'-4"	1'-4"	EXP JT TIE	153	SPREAD		1384	LB
N	S1607E	10	7'-9"	1'-9"	EXP JT TIE	81				
P	S1608E	-----	8'-2"	2'-2"	EXP JT TIE	-----	REINFORCEMENT (EPOXY)			
Q	S1609E	38	9'-1"	4'-0"	RAIL DOWEL	360	2839			LB

BAR	MARK	NO.	LENGTH		LOCATION	WEIGHT	DIMENSIONS AND QUANTITIES			
h =16'	16' PANELS:		F				PANEL LENGTH =		30'-6"	
SPREAD FOOTING REINFORCEMENT							DIMENSIONS			
							SPREAD FOOTING			
A	F1601	18	32'-11"	STR.	LONG T & B	618				
B	F1602	31	8'-0"	STR.	TRANS BOT	259	b	2'-7"	e	-----
C	F1903	31	8'-0"	STR.	TRANS TOP	372	c	1'-9"	f	-----
							STEM			
							a	2'-2"	ke	2'-1"
							j	1' 9- 5/16"	kf	6'-1/2"
FOOTING DOWELS & STEM REINFORCEMENT							QUANTITIES			
D	F1604E	31	3'-0"	STR.	DOWEL FF	97	STRUCTURAL CONCRETE (1A43)			
E	F1905E	31	4'-10"	1'-0"	DOWEL BF	225	(FOOTING)			
F	F2206E	30	9'-4"	8'-1"	DOWEL BF	572	SPREAD		17.2	CU YD
G	S1301E	31	13'-2"	STR.	VERT FF	273				
H	S1602E	31	13'-2"	STR.	VERT BF	426	STRUCTURAL CONCRETE (3Y43)			
J	S1603E	----	-----	STR.	VERT BF	-----	(STEM)			
K	S1604E	31	10'-7"	4'-6"	TIE	342			31.9	CU YD
L	S1305E	32	30'-0"	STR.	HORIZ EF	641	REINFORCEMENT (PLAIN)			
M	S1606E	20	7'-4"	1'-4"	EXP JT TIE	153	SPREAD		1249	LB
N	S1607E	12	7'-9"	1'-9"	EXP JT TIE	97				
P	S1608E	-----	8'-2"	2'-2"	EXP JT TIE	-----	REINFORCEMENT (EPOXY)			
Q	S1609E	38	9'-1"	4'-0"	RAIL DOWEL	360	3186			LB

BAR	MARK	NO.	LENGTH		LOCATION	WEIGHT	DIMENSIONS AND QUANTITIES			
h =17'	17' PANELS:		G				PANEL LENGTH =		30'-6"	
SPREAD FOOTING REINFORCEMENT							DIMENSIONS			
							SPREAD FOOTING			
A	F1601	20	32'-11"	STR.	LONG T & B	687				
B	F1602	31	8'-6"	STR.	TRANS BOT	275	b	2'-9"	e	-----
C	F2203	31	8'-6"	STR.	TRANS TOP	539	c	1'-9"	f	-----
							STEM			
							a	2' 2-1/2"	ke	2'-6 1/2"
							j	1' 9-13/16"	kf	7'-3"
FOOTING DOWELS & STEM REINFORCEMENT							QUANTITIES			
D	F1604E	31	3'-0"	STR.	DOWEL FF	97	STRUCTURAL CONCRETE (1A43)			
E	F1905E	31	9'-4"	4'-7"	DOWEL BF	435	(FOOTING)			
F	F2206E	30	10'-4"	9'-1"	DOWEL BF	634	SPREAD		18.2	CU YD
G	S1301E	31	14'-2"	STR.	VERT FF	293				
H	S1602E	31	14'-2"	STR.	VERT BF	458	STRUCTURAL CONCRETE (3Y43)			
J	S1603E	----	-----	STR.	VERT BF	-----	(STEM)			
K	S1604E	31	10'-7"	4'-6"	TIE	342			34.3	CU YD
L	S1305E	34	30'-0"	STR.	HORIZ EF	681	REINFORCEMENT (PLAIN)			
M	S1606E	20	7'-4"	1'-4"	EXP JT TIE	153	SPREAD		1500	LB
N	S1607E	14	7'-9"	1'-9"	EXP JT TIE	113				
P	S1608E	-----	8'-2"	2'-2"	EXP JT TIE	-----	REINFORCEMENT (EPOXY)			
Q	S1609E	38	9'-1"	4'-0"	RAIL DOWEL	360	3566			LB

BAR	MARK	NO.	LENGTH		LOCATION	WEIGHT	DIMENSIONS AND QUANTITIES			
h =18'	18' PANELS:		H				PANEL LENGTH =		30'-6"	
SPREAD FOOTING REINFORCEMENT							DIMENSIONS			
							SPREAD FOOTING			
A	F1601	20	32'-11"	STR.	LONG T & B	687				
B	F1602	31	9'-0"	STR.	TRANS BOT	291	b	3'-0"	e	-----
C	F2203	31	9'-0"	STR.	TRANS TOP	570	c	1'-9"	f	-----
							STEM			
							a	2'-3"	ke	3'-6"
							j	1' 10- 5/16"	kf	8'-3"
FOOTING DOWELS & STEM REINFORCEMENT							QUANTITIES			
D	F1604E	31	3'-0"	STR.	DOWEL FF	97	STRUCTURAL CONCRETE (1A43)			
E	F1905E	31	10'-7"	4'-10"	DOWEL BF	493	(FOOTING)			
F	F2206E	30	11'-4"	10'-1"	DOWEL BF	695	SPREAD		19.2	CU YD
G	S1301E	31	15'-2"	STR.	VERT FF	314				
H	S1602E	31	15'-2"	STR.	VERT BF	490	STRUCTURAL CONCRETE (3Y43)			
J	S1603E	----	-----	STR.	VERT BF	-----	(STEM)			
K	S1604E	31	10'-7"	4'-6"	TIE	342			36.8	CU YD
L	S1305E	36	30'-0"	STR.	HORIZ EF	721	REINFORCEMENT (PLAIN)			
M	S1606E	20	7'-4"	1'-4"	EXP JT TIE	153	SPREAD		1548	LB
N	S1607E	16	7'-9"	1'-9"	EXP JT TIE	129				
P	S1608E	-----	8'-2"	2'-2"	EXP JT TIE	-----	REINFORCEMENT (EPOXY)			
Q	S1609E	38	9'-1"	4'-0"	RAIL DOWEL	360	3795			LB

S.P. 179-020-031 S.P. 019-605-028

SHEET 2 OF 12

RETW5 PANEL TABULATIONS

DRAWN BY: GJ | CHECKED BY: HS | CERTIFIED BY _____ LICENSED PROFESSIONAL ENGINEER | LIC. NO. 18520 DATE 6/18/12

STATE PROJ. NO. 1901-148 (T.H. 13) SHEET NO. 305 OF 442 SHEETS

DISTRICT #: METRO
IPLOT NAME: d1901148_rw5
PATH & FILENAME: Projects/DM_ROS/013/1901/148/Design/Walls/RW5/d1901148_rw5.dgn
PLOTTED/REVISED: 13-JUN-2012 15:56

BAR	MARK	NO.	LENGTH		LOCATION	WEIGHT	DIMENSIONS AND QUANTITIES			
	h =18'6-1	19' PANELS:		I			PANEL LENGTH =		30'-6"	
SPREAD FOOTING REINFORCEMENT							DIMENSIONS			
							SPREAD FOOTING			
A	F1601	22	32'-11"	STR.	LONG T & B	755				
B	F1602	31	9'-6"	STR.	TRANS BOT	307	b	3'-2"	e	-----
C	F2503	31	9'-6"	STR.	TRANS TOP	786	c	1'-9"	f	-----
							d	10'-0"	g	3' 4- 5/16"
							STEM			
							a	2' 3-1/2"	ke	4'-6"
							j	1' 10-3/4"	kf	8'-1 1/2"
FOOTING DOWELS & STEM REINFORCEMENT							QUANTITIES			
D	F1604E	31	3'-0"	STR.	DOWEL FF	97	STRUCTURAL CONCRETE (1A43)			
E	F2205E	31	11'-10"	5'-1"	DOWEL BF	750	(FOOTING)			
F	F2206E	30	10'-1"	8'-10"	DOWEL BF	618	SPREAD		20.3	CU YD
G	S1301E	31	16'-2"	STR.	VERT FF	335				
H	S1602E	31	16'-2"	STR.	VERT BF	523	STRUCTURAL CONCRETE (3Y43)			
J	S1603E	30	9'-6"	STR.	VERT BF	297	(STEM)			
K	S1604E	31	10'-7"	4'-6"	TIE	342			39.4	CU YD
L	S1305E	38	30'-0"	STR.	HORIZ EF	762	REINFORCEMENT (PLAIN)			
M	S1606E	20	7'-4"	1'-4"	EXP JT TIE	153	SPREAD		1849	LB
N	S1607E	18	7'-9"	1'-9"	EXP JT TIE	145				
P	S1608E	-----	8'-2"	2'-2"	EXP JT TIE	-----	REINFORCEMENT (EPOXY)			
Q	S1609E	38	9'-1"	4'-0"	RAIL DOWEL	360	4382			LB

BAR	MARK	NO.	LENGTH		LOCATION	WEIGHT	DIMENSIONS AND QUANTITIES			
	h =19'	19' PANELS:		J			PANEL LENGTH =		30'-6"	
SPREAD FOOTING REINFORCEMENT							DIMENSIONS			
							SPREAD FOOTING			
A	F1601	22	32'-11"	STR.	LONG T & B	755				
B	F1602	31	9'-6"	STR.	TRANS BOT	307	b	3'-2"	e	-----
C	F2503	31	9'-6"	STR.	TRANS TOP	786	c	1'-9"	f	-----
							d	10'-0"	g	3' 4- 5/16"
							STEM			
							a	2' 3-1/2"	ke	5'-0"
							j	1' 10-3/4"	kf	7'-6"
FOOTING DOWELS & STEM REINFORCEMENT							QUANTITIES			
D	F1604E	31	3'-0"	STR.	DOWEL FF	97	STRUCTURAL CONCRETE (1A43)			
E	F2205E	31	11'-10"	5'-1"	DOWEL BF	750	(FOOTING)			
F	F2206E	30	10'-1"	8'-10"	DOWEL BF	618	SPREAD		20.3	CU YD
G	S1301E	31	16'-2"	STR.	VERT FF	335				
H	S1602E	31	16'-2"	STR.	VERT BF	523	STRUCTURAL CONCRETE (3Y43)			
J	S1603E	30	9'-6"	STR.	VERT BF	297	(STEM)			
K	S1604E	31	10'-7"	4'-6"	TIE	342			40.6	CU YD
L	S1305E	38	30'-0"	STR.	HORIZ EF	762	REINFORCEMENT (PLAIN)			
M	S1606E	20	7'-4"	1'-4"	EXP JT TIE	153	SPREAD		1849	LB
N	S1607E	18	7'-9"	1'-9"	EXP JT TIE	145				
P	S1608E	-----	8'-2"	2'-2"	EXP JT TIE	-----	REINFORCEMENT (EPOXY)			
Q	S1609E	38	9'-1"	4'-0"	RAIL DOWEL	360	4382			LB

BAR	MARK	NO.	LENGTH		LOCATION	WEIGHT	DIMENSIONS AND QUANTITIES			
	h =19'	19' PANELS:		K			PANEL LENGTH =		30'-6"	
SPREAD FOOTING REINFORCEMENT							DIMENSIONS			
							SPREAD FOOTING			
A	F1601	22	32'-11"	STR.	LONG T & B	755				
B	F1602	31	9'-6"	STR.	TRANS BOT	307	b	3'-2"	e	-----
C	F2503	31	9'-6"	STR.	TRANS TOP	786	c	1'-9"	f	-----
							d	10'-0"	g	3' 4- 5/16"
							STEM			
							a	2' 3-1/2"	ke	5'-0"
							j	1' 10-3/4"	kf	7'-6"
FOOTING DOWELS & STEM REINFORCEMENT							QUANTITIES			
D	F1604E	31	3'-0"	STR.	DOWEL FF	97	STRUCTURAL CONCRETE (1A43)			
E	F2205E	31	11'-10"	5'-1"	DOWEL BF	750	(FOOTING)			
F	F2206E	30	10'-1"	8'-10"	DOWEL BF	618	SPREAD		20.3	CU YD
G	S1301E	31	16'-2"	STR.	VERT FF	335				
H	S1602E	31	16'-2"	STR.	VERT BF	523	STRUCTURAL CONCRETE (3Y43)			
J	S1603E	30	9'-6"	STR.	VERT BF	297	(STEM)			
K	S1604E	31	10'-7"	4'-6"	TIE	342			40.6	CU YD
L	S1305E	38	30'-0"	STR.	HORIZ EF	762	REINFORCEMENT (PLAIN)			
M	S1606E	20	7'-4"	1'-4"	EXP JT TIE	153	SPREAD		1849	LB
N	S1607E	18	7'-9"	1'-9"	EXP JT TIE	145				
P	S1608E	-----	8'-2"	2'-2"	EXP JT TIE	-----	REINFORCEMENT (EPOXY)			
Q	S1609E	38	9'-1"	4'-0"	RAIL DOWEL	360	4382			LB

BAR	MARK	NO.	LENGTH		LOCATION	WEIGHT	DIMENSIONS AND QUANTITIES			
	h =19'	19' PANELS:		L			PANEL LENGTH =		30'-6"	
SPREAD FOOTING REINFORCEMENT							DIMENSIONS			
							SPREAD FOOTING			
A	F1601	22	32'-11"	STR.	LONG T & B	755				
B	F1602	31	9'-6"	STR.	TRANS BOT	307	b	3'-2"	e	-----
C	F2503	31	9'-6"	STR.	TRANS TOP	786	c	1'-9"	f	-----
							d	10'-0"	g	3' 4- 5/16"
							STEM			
							a	2' 3-1/2"	ke	4'-6"
							j	1' 10-3/4"	kf	8'-1 1/2"
FOOTING DOWELS & STEM REINFORCEMENT							QUANTITIES			
D	F1604E	31	3'-0"	STR.	DOWEL FF	97	STRUCTURAL CONCRETE (1A43)			
E	F2205E	31	11'-10"	5'-1"	DOWEL BF	750	(FOOTING)			
F	F2206E	30	10'-1"	8'-10"	DOWEL BF	618	SPREAD		20.3	CU YD
G	S1301E	31	16'-2"	STR.	VERT FF	335				
H	S1602E	31	16'-2"	STR.	VERT BF	523	STRUCTURAL CONCRETE (3Y43)			
J	S1603E	30	9'-6"	STR.	VERT BF	297	(STEM)			
K	S1604E	31	10'-7"	4'-6"	TIE	342			39.4	CU YD
L	S1305E	38	30'-0"	STR.	HORIZ EF	762	REINFORCEMENT (PLAIN)			
M	S1606E	20	7'-4"	1'-4"	EXP JT TIE	153	SPREAD		1849	LB
N	S1607E	18	7'-9"	1'-9"	EXP JT TIE	145				
P	S1608E	-----	8'-2"	2'-2"	EXP JT TIE	-----	REINFORCEMENT (EPOXY)			
Q	S1609E	38	9'-1"	4'-0"	RAIL DOWEL	360	4382			LB

S.P. 179-020-031 S.P. 019-605-028

SHEET 3 OF 12

RETW5 PANEL TABULATIONS

DRAWN BY: GJ | CHECKED BY: HS | CERTIFIED BY LICENSED PROFESSIONAL ENGINEER | LIC. NO. 18520 DATE 6/18/12

STATE PROJ. NO. 1901-148 (T.H. 13) SHEET NO. 306 OF 442 SHEETS

PLOTTED/REVISED: 13-JUN-2012 15:57
DISTRICT #: METRO
IPLOT NAME: d190l148_rw5
PATH & FILENAME: Projects/DM_ROS/013/190l/148/Design/Walls/RW5/d190l148_rw5.dgn

BAR	MARK	NO.	LENGTH		LOCATION	WEIGHT	DIMENSIONS AND QUANTITIES			
h =19'	19' PANELS:		M				PANEL LENGTH =		30'-6"	
SPREAD FOOTING REINFORCEMENT							DIMENSIONS			
							SPREAD FOOTING			
A	F1601	22	32'-11"	STR.	LONG T & B	755				
B	F1602	31	9'-6"	STR.	TRANS BOT	307	b	3'-2"	e	-----
C	F2503	31	9'-6"	STR.	TRANS TOP	786	c	1'-9"	f	-----
							d	10'-0"	g	3' 4- 5/16"
							STEM			
							a	2' 3-1/2"	ke	4'-6"
							j	1' 10-3/4"	kf	8'-1 1/2"
FOOTING DOWELS & STEM REINFORCEMENT							QUANTITIES			
D	F1604E	31	3'-0"	STR.	DOWEL FF	97	STRUCTURAL CONCRETE (1A43)			
E	F2205E	31	11'-10"	5'-1"	DOWEL BF	750	(FOOTING)			
F	F2206E	30	10'-1"	8'-10"	DOWEL BF	618	SPREAD		20.3	CU YD
G	S1301E	31	16'-2"	STR.	VERT FF	335				
H	S1602E	31	16'-2"	STR.	VERT BF	523	STRUCTURAL CONCRETE (3Y43)			
J	S1603E	30	9'-6"	STR.	VERT BF	297	(STEM)			
K	S1604E	31	10'-7"	4'-6"	TIE	342			39.4	CU YD
L	S1305E	38	30'-0"	STR.	HORIZ EF	762	REINFORCEMENT (PLAIN)			
M	S1606E	20	7'-4"	1'-4"	EXP JT TIE	153	SPREAD		1849	LB
N	S1607E	18	7'-9"	1'-9"	EXP JT TIE	145				
P	S1608E	-----	8'-2"	2'-2"	EXP JT TIE	-----	REINFORCEMENT (EPOXY)			
Q	S1609E	38	9'-1"	4'-0"	RAIL DOWEL	360	4382			LB

BAR	MARK	NO.	LENGTH		LOCATION	WEIGHT	DIMENSIONS AND QUANTITIES			
h =19'	19' PANELS:		O				PANEL LENGTH =		30'-6"	
SPREAD FOOTING REINFORCEMENT							DIMENSIONS			
							SPREAD FOOTING			
A	F1601	22	32'-11"	STR.	LONG T & B	755				
B	F1602	31	9'-6"	STR.	TRANS BOT	307	b	3'-2"	e	-----
C	F2503	31	9'-6"	STR.	TRANS TOP	786	c	1'-9"	f	-----
							d	10'-0"	g	3' 4- 5/16"
							STEM			
							a	2' 3-1/2"	ke	5'-0"
							j	1' 10-3/4"	kf	7'-6"
FOOTING DOWELS & STEM REINFORCEMENT							QUANTITIES			
D	F1604E	31	3'-0"	STR.	DOWEL FF	97	STRUCTURAL CONCRETE (1A43)			
E	F2205E	31	11'-10"	5'-1"	DOWEL BF	750	(FOOTING)			
F	F2206E	30	10'-1"	8'-10"	DOWEL BF	618	SPREAD		20.3	CU YD
G	S1301E	31	16'-2"	STR.	VERT FF	335				
H	S1602E	31	16'-2"	STR.	VERT BF	523	STRUCTURAL CONCRETE (3Y43)			
J	S1603E	30	9'-6"	STR.	VERT BF	297	(STEM)			
K	S1604E	31	10'-7"	4'-6"	TIE	342			40.6	CU YD
L	S1305E	38	30'-0"	STR.	HORIZ EF	762	REINFORCEMENT (PLAIN)			
M	S1606E	20	7'-4"	1'-4"	EXP JT TIE	153	SPREAD		1849	LB
N	S1607E	18	7'-9"	1'-9"	EXP JT TIE	145				
P	S1608E	-----	8'-2"	2'-2"	EXP JT TIE	-----	REINFORCEMENT (EPOXY)			
Q	S1609E	38	9'-1"	4'-0"	RAIL DOWEL	360	4382			LB

BAR	MARK	NO.	LENGTH		LOCATION	WEIGHT	DIMENSIONS AND QUANTITIES			
h =19'	19' PANELS:		N				PANEL LENGTH =		30'-6"	
SPREAD FOOTING REINFORCEMENT							DIMENSIONS			
							SPREAD FOOTING			
A	F1601	22	32'-11"	STR.	LONG T & B	755				
B	F1602	31	9'-6"	STR.	TRANS BOT	307	b	3'-2"	e	-----
C	F2503	31	9'-6"	STR.	TRANS TOP	786	c	1'-9"	f	-----
							d	10'-0"	g	3' 4- 5/16"
							STEM			
							a	2' 3-1/2"	ke	5'-0"
							j	1' 10-3/4"	kf	7'-6"
FOOTING DOWELS & STEM REINFORCEMENT							QUANTITIES			
D	F1604E	31	3'-0"	STR.	DOWEL FF	97	STRUCTURAL CONCRETE (1A43)			
E	F2205E	31	11'-10"	5'-1"	DOWEL BF	750	(FOOTING)			
F	F2206E	30	10'-1"	8'-10"	DOWEL BF	618	SPREAD		20.3	CU YD
G	S1301E	31	16'-2"	STR.	VERT FF	335				
H	S1602E	31	16'-2"	STR.	VERT BF	523	STRUCTURAL CONCRETE (3Y43)			
J	S1603E	30	9'-6"	STR.	VERT BF	297	(STEM)			
K	S1604E	31	10'-7"	4'-6"	TIE	342			40.6	CU YD
L	S1305E	38	30'-0"	STR.	HORIZ EF	762	REINFORCEMENT (PLAIN)			
M	S1606E	20	7'-4"	1'-4"	EXP JT TIE	153	SPREAD		1849	LB
N	S1607E	18	7'-9"	1'-9"	EXP JT TIE	145				
P	S1608E	-----	8'-2"	2'-2"	EXP JT TIE	-----	REINFORCEMENT (EPOXY)			
Q	S1609E	38	9'-1"	4'-0"	RAIL DOWEL	360	4382			LB

BAR	MARK	NO.	LENGTH		LOCATION	WEIGHT	DIMENSIONS AND QUANTITIES			
h =19'	19' PANELS:		P				PANEL LENGTH =		30'-6"	
SPREAD FOOTING REINFORCEMENT							DIMENSIONS			
							SPREAD FOOTING			
A	F1601	22	32'-11"	STR.	LONG T & B	755				
B	F1602	31	9'-6"	STR.	TRANS BOT	307	b	3'-2"	e	-----
C	F2503	31	9'-6"	STR.	TRANS TOP	786	c	1'-9"	f	-----
							d	10'-0"	g	3' 4- 5/16"
							STEM			
							a	2' 3-1/2"	ke	5'-0"
							j	1' 10-3/4"	kf	7'-6"
FOOTING DOWELS & STEM REINFORCEMENT							QUANTITIES			
D	F1604E	31	3'-0"	STR.	DOWEL FF	97	STRUCTURAL CONCRETE (1A43)			
E	F2205E	31	11'-10"	5'-1"	DOWEL BF	750	(FOOTING)			
F	F2206E	30	10'-1"	8'-10"	DOWEL BF	618	SPREAD		20.3	CU YD
G	S1301E	31	16'-2"	STR.	VERT FF	335				
H	S1602E	31	16'-2"	STR.	VERT BF	523	STRUCTURAL CONCRETE (3Y43)			
J	S1603E	30	9'-6"	STR.	VERT BF	297	(STEM)			
K	S1604E	31	10'-7"	4'-6"	TIE	342			40.6	CU YD
L	S1305E	38	30'-0"	STR.	HORIZ EF	762	REINFORCEMENT (PLAIN)			
M	S1606E	20	7'-4"	1'-4"	EXP JT TIE	153	SPREAD		1849	LB
N	S1607E	18	7'-9"	1'-9"	EXP JT TIE	145				
P	S1608E	-----	8'-2"	2'-2"	EXP JT TIE	-----	REINFORCEMENT (EPOXY)			
Q	S1609E	38	9'-1"	4'-0"	RAIL DOWEL	360	4382			LB

PLOTTED/REVISED: 13-JUN-2012 15:59
DISTRICT #: METRO
IPLOT NAME: d1901148_rw5
PATH & FILENAME: Projects/DM_ROS/013/1901/148/Design/Walls/RW5/d1901148_rw5.dgn

S.P. 179-020-031 S.P. 019-605-028

RETW5 PANEL TABULATIONS

DRAWN BY: GJ | CHECKED BY: HS | CERTIFIED BY LICENSED PROFESSIONAL ENGINEER | LIC. NO. 18520 DATE 6/18/12

BAR	MARK	NO.	LENGTH		LOCATION	WEIGHT	DIMENSIONS AND QUANTITIES
	h =19'	19' PANELS:		Q			PANEL LENGTH = 30'-6"
SPREAD FOOTING REINFORCEMENT							DIMENSIONS
							SPREAD FOOTING
A	F1601	22	32'-11"	STR.	LONG T & B	755	
B	F1602	31	9'-6"	STR.	TRANS BOT	307	b 3'-2" e -----
C	F2503	31	9'-6"	STR.	TRANS TOP	786	c 1'-9" f -----
							d 10'-0" g 3' 4- 5/16"
							STEM
							a 2' 3-1/2" ke 5'-0"
							j 1' 10-3/4" kf 7'-6"
FOOTING DOWELS & STEM REINFORCEMENT							QUANTITIES
D	F1604E	31	3'-0"	STR.	DOWEL FF	97	STRUCTURAL CONCRETE (1A43)
E	F2205E	31	11'-10"	5'-1"	DOWEL BF	750	(FOOTING)
F	F2206E	30	10'-1"	8'-10"	DOWEL BF	618	SPREAD 20.3 CU YD
G	S1301E	31	16'-2"	STR.	VERT FF	335	
H	S1602E	31	16'-2"	STR.	VERT BF	523	STRUCTURAL CONCRETE (3Y43)
J	S1603E	30	9'-6"	STR.	VERT BF	297	(STEM)
K	S1604E	31	10'-7"	4'-6"	TIE	342	40.6 CU YD
L	S1305E	38	30'-0"	STR.	HORIZ EF	762	REINFORCEMENT (PLAIN)
M	S1606E	20	7'-4"	1'-4"	EXP JT TIE	153	SPREAD 1849 LB
N	S1607E	18	7'-9"	1'-9"	EXP JT TIE	145	
P	S1608E	-----	8'-2"	2'-2"	EXP JT TIE	-----	REINFORCEMENT (EPOXY)
Q	S1609E	38	9'-1"	4'-0"	RAIL DOWEL	360	4382 LB

BAR	MARK	NO.	LENGTH		LOCATION	WEIGHT	DIMENSIONS AND QUANTITIES
	h =18'	18' PANELS:		S			PANEL LENGTH = 30'-6"
SPREAD FOOTING REINFORCEMENT							DIMENSIONS
							SPREAD FOOTING
A	F1601	20	32'-11"	STR.	LONG T & B	687	
B	F1602	31	9'-0"	STR.	TRANS BOT	291	b 3'-0" e -----
C	F2203	31	9'-0"	STR.	TRANS TOP	570	c 1'-9" f -----
							d 9'-6" g 3' 2- 5/16"
							STEM
							a 2'-3" ke 4'-0"
							j 1' 10- 5/16" kf 8'-9"
FOOTING DOWELS & STEM REINFORCEMENT							QUANTITIES
D	F1604E	31	3'-0"	STR.	DOWEL FF	97	STRUCTURAL CONCRETE (1A43)
E	F1905E	31	10'-7"	4'-10"	DOWEL BF	493	(FOOTING)
F	F2206E	30	11'-4"	10'-1"	DOWEL BF	695	SPREAD 19.2 CU YD
G	S1301E	31	15'-2"	STR.	VERT FF	314	
H	S1602E	31	15'-2"	STR.	VERT BF	490	STRUCTURAL CONCRETE (3Y43)
J	S1603E	----	-----	STR.	VERT BF	-----	(STEM)
K	S1604E	31	10'-7"	4'-6"	TIE	342	38.1 CU YD
L	S1305E	36	30'-0"	STR.	HORIZ EF	721	REINFORCEMENT (PLAIN)
M	S1606E	20	7'-4"	1'-4"	EXP JT TIE	153	SPREAD 1548 LB
N	S1607E	16	7'-9"	1'-9"	EXP JT TIE	129	
P	S1608E	-----	8'-2"	2'-2"	EXP JT TIE	-----	REINFORCEMENT (EPOXY)
Q	S1609E	38	9'-1"	4'-0"	RAIL DOWEL	360	3795 LB

BAR	MARK	NO.	LENGTH		LOCATION	WEIGHT	DIMENSIONS AND QUANTITIES
	h =19'	19' PANELS:		R			PANEL LENGTH = 30'-6"
SPREAD FOOTING REINFORCEMENT							DIMENSIONS
							SPREAD FOOTING
A	F1601	22	32'-11"	STR.	LONG T & B	755	
B	F1602	31	9'-6"	STR.	TRANS BOT	307	b 3'-2" e -----
C	F2503	31	9'-6"	STR.	TRANS TOP	786	c 1'-9" f -----
							d 10'-0" g 3' 4- 5/16"
							STEM
							a 2' 3-1/2" ke 4'-6"
							j 1' 10-3/4" kf 8'-1 1/2"
FOOTING DOWELS & STEM REINFORCEMENT							QUANTITIES
D	F1604E	31	3'-0"	STR.	DOWEL FF	97	STRUCTURAL CONCRETE (1A43)
E	F2205E	31	11'-10"	5'-1"	DOWEL BF	750	(FOOTING)
F	F2206E	30	10'-1"	8'-10"	DOWEL BF	618	SPREAD 20.3 CU YD
G	S1301E	31	16'-2"	STR.	VERT FF	335	
H	S1602E	31	16'-2"	STR.	VERT BF	523	STRUCTURAL CONCRETE (3Y43)
J	S1603E	30	9'-6"	STR.	VERT BF	297	(STEM)
K	S1604E	31	10'-7"	4'-6"	TIE	342	39.4 CU YD
L	S1305E	38	30'-0"	STR.	HORIZ EF	762	REINFORCEMENT (PLAIN)
M	S1606E	20	7'-4"	1'-4"	EXP JT TIE	153	SPREAD 1849 LB
N	S1607E	18	7'-9"	1'-9"	EXP JT TIE	145	
P	S1608E	-----	8'-2"	2'-2"	EXP JT TIE	-----	REINFORCEMENT (EPOXY)
Q	S1609E	38	9'-1"	4'-0"	RAIL DOWEL	360	4382 LB

BAR	MARK	NO.	LENGTH		LOCATION	WEIGHT	DIMENSIONS AND QUANTITIES
	h =18'	18' PANELS:		T			PANEL LENGTH = 30'-6"
SPREAD FOOTING REINFORCEMENT							DIMENSIONS
							SPREAD FOOTING
A	F1601	20	32'-11"	STR.	LONG T & B	687	
B	F1602	31	9'-0"	STR.	TRANS BOT	291	b 3'-0" e -----
C	F2203	31	9'-0"	STR.	TRANS TOP	570	c 1'-9" f -----
							d 9'-6" g 3' 2- 5/16"
							STEM
							a 2'-3" ke 4'-0"
							j 1' 10- 5/16" kf 8'-9"
FOOTING DOWELS & STEM REINFORCEMENT							QUANTITIES
D	F1604E	31	3'-0"	STR.	DOWEL FF	97	STRUCTURAL CONCRETE (1A43)
E	F1905E	31	10'-7"	4'-10"	DOWEL BF	493	(FOOTING)
F	F2206E	30	11'-4"	10'-1"	DOWEL BF	695	SPREAD 19.2 CU YD
G	S1301E	31	15'-2"	STR.	VERT FF	314	
H	S1602E	31	15'-2"	STR.	VERT BF	490	STRUCTURAL CONCRETE (3Y43)
J	S1603E	----	-----	STR.	VERT BF	-----	(STEM)
K	S1604E	31	10'-7"	4'-6"	TIE	342	38.1 CU YD
L	S1305E	36	30'-0"	STR.	HORIZ EF	721	REINFORCEMENT (PLAIN)
M	S1606E	20	7'-4"	1'-4"	EXP JT TIE	153	SPREAD 1548 LB
N	S1607E	16	7'-9"	1'-9"	EXP JT TIE	129	
P	S1608E	-----	8'-2"	2'-2"	EXP JT TIE	-----	REINFORCEMENT (EPOXY)
Q	S1609E	38	9'-1"	4'-0"	RAIL DOWEL	360	3795 LB

S.P. 179-020-031 S.P. 019-605-028

SHEET 5 OF 12

RETW5 PANEL TABULATIONS

DRAWN BY: GJ | CHECKED BY: HS | CERTIFIED BY _____ LICENSED PROFESSIONAL ENGINEER | LIC. NO. 18520 DATE 6/18/12

STATE PROJ. NO. 1901-148 (T.H. 13) SHEET NO. 308 OF 442 SHEETS

PLOTTED/REVISED: 13-JUN-2012 16:00
DISTRICT #: METRO
IPLOT NAME: d190l148_rw5
PATH & FILENAME: Projects/DM_ROS/013/190l/148/Design/Walls/RW5/d190l148_rw5.dgn

BAR	MARK	NO.	LENGTH		LOCATION	WEIGHT	DIMENSIONS AND QUANTITIES			
h =18'	18' PANELS:		U				PANEL LENGTH =		30'-6"	
SPREAD FOOTING REINFORCEMENT							DIMENSIONS			
							SPREAD FOOTING			
A	F1601	20	32'-11"	STR.	LONG T & B	687				
B	F1602	31	9'-0"	STR.	TRANS BOT	291	b	3'-0"	e	-----
C	F2203	31	9'-0"	STR.	TRANS TOP	570	c	1'-9"	f	-----
							d	9'-6"	g	3' 2- 5/16"
							STEM			
							a	2'-3"	ke	4'-0"
							j	1' 10- 5/16"	kf	8'-9"
FOOTING DOWELS & STEM REINFORCEMENT							QUANTITIES			
D	F1604E	31	3'-0"	STR.	DOWEL FF	97	STRUCTURAL CONCRETE (1A43)			
E	F1905E	31	10'-7"	4'-10"	DOWEL BF	493	(FOOTING)			
F	F2206E	30	11'-4"	10'-1"	DOWEL BF	695	SPREAD		19.2	CU YD
G	S1301E	31	15'-2"	STR.	VERT FF	314				
H	S1602E	31	15'-2"	STR.	VERT BF	490	STRUCTURAL CONCRETE (3Y43)			
J	S1603E	----	-----	STR.	VERT BF	-----	(STEM)			
K	S1604E	31	10'-7"	4'-6"	TIE	342			38.1	CU YD
L	S1305E	36	30'-0"	STR.	HORIZ EF	721	REINFORCEMENT (PLAIN)			
M	S1606E	20	7'-4"	1'-4"	EXP JT TIE	153	SPREAD		1548	LB
N	S1607E	16	7'-9"	1'-9"	EXP JT TIE	129				
P	S1608E	-----	8'-2"	2'-2"	EXP JT TIE	-----	REINFORCEMENT (EPOXY)			
Q	S1609E	38	9'-1"	4'-0"	RAIL DOWEL	360	3795			LB

BAR	MARK	NO.	LENGTH		LOCATION	WEIGHT	DIMENSIONS AND QUANTITIES			
h =17'	17' PANELS:		W				PANEL LENGTH =		30'-6"	
SPREAD FOOTING REINFORCEMENT							DIMENSIONS			
							SPREAD FOOTING			
A	F1601	20	32'-11"	STR.	LONG T & B	687				
B	F1602	31	8'-6"	STR.	TRANS BOT	275	b	2'-9"	e	-----
C	F2203	31	8'-6"	STR.	TRANS TOP	539	c	1'-9"	f	-----
							d	9'-0"	g	2' 11- 5/16"
							STEM			
							a	2' 2-1/2"	ke	3'-0"
							j	1' 9-13/16"	kf	7'-9"
FOOTING DOWELS & STEM REINFORCEMENT							QUANTITIES			
D	F1604E	31	3'-0"	STR.	DOWEL FF	97	STRUCTURAL CONCRETE (1A43)			
E	F1905E	31	9'-4"	4'-7"	DOWEL BF	435	(FOOTING)			
F	F2206E	30	10'-4"	9'-1"	DOWEL BF	634	SPREAD		18.2	CU YD
G	S1301E	31	14'-2"	STR.	VERT FF	293				
H	S1602E	31	14'-2"	STR.	VERT BF	458	STRUCTURAL CONCRETE (3Y43)			
J	S1603E	----	-----	STR.	VERT BF	-----	(STEM)			
K	S1604E	31	10'-7"	4'-6"	TIE	342			35.6	CU YD
L	S1305E	34	30'-0"	STR.	HORIZ EF	681	REINFORCEMENT (PLAIN)			
M	S1606E	20	7'-4"	1'-4"	EXP JT TIE	153	SPREAD		1500	LB
N	S1607E	14	7'-9"	1'-9"	EXP JT TIE	113				
P	S1608E	-----	8'-2"	2'-2"	EXP JT TIE	-----	REINFORCEMENT (EPOXY)			
Q	S1609E	38	9'-1"	4'-0"	RAIL DOWEL	360	3566			LB

BAR	MARK	NO.	LENGTH		LOCATION	WEIGHT	DIMENSIONS AND QUANTITIES			
h =18'	18' PANELS:		V				PANEL LENGTH =		30'-6"	
SPREAD FOOTING REINFORCEMENT							DIMENSIONS			
							SPREAD FOOTING			
A	F1601	20	32'-11"	STR.	LONG T & B	687				
B	F1602	31	9'-0"	STR.	TRANS BOT	291	b	3'-0"	e	-----
C	F2203	31	9'-0"	STR.	TRANS TOP	570	c	1'-9"	f	-----
							d	9'-6"	g	3' 2- 5/16"
							STEM			
							a	2'-3"	ke	3'-6"
							j	1' 10- 5/16"	kf	8'-3"
FOOTING DOWELS & STEM REINFORCEMENT							QUANTITIES			
D	F1604E	31	3'-0"	STR.	DOWEL FF	97	STRUCTURAL CONCRETE (1A43)			
E	F1905E	31	10'-7"	4'-10"	DOWEL BF	493	(FOOTING)			
F	F2206E	30	11'-4"	10'-1"	DOWEL BF	695	SPREAD		19.2	CU YD
G	S1301E	31	15'-2"	STR.	VERT FF	314				
H	S1602E	31	15'-2"	STR.	VERT BF	490	STRUCTURAL CONCRETE (3Y43)			
J	S1603E	----	-----	STR.	VERT BF	-----	(STEM)			
K	S1604E	31	10'-7"	4'-6"	TIE	342			36.8	CU YD
L	S1305E	36	30'-0"	STR.	HORIZ EF	721	REINFORCEMENT (PLAIN)			
M	S1606E	20	7'-4"	1'-4"	EXP JT TIE	153	SPREAD		1548	LB
N	S1607E	16	7'-9"	1'-9"	EXP JT TIE	129				
P	S1608E	-----	8'-2"	2'-2"	EXP JT TIE	-----	REINFORCEMENT (EPOXY)			
Q	S1609E	38	9'-1"	4'-0"	RAIL DOWEL	360	3795			LB

BAR	MARK	NO.	LENGTH		LOCATION	WEIGHT	DIMENSIONS AND QUANTITIES			
h =17'	17' PANELS:		X				PANEL LENGTH =		30'-6"	
SPREAD FOOTING REINFORCEMENT							DIMENSIONS			
							SPREAD FOOTING			
A	F1601	20	32'-11"	STR.	LONG T & B	687				
B	F1602	31	8'-6"	STR.	TRANS BOT	275	b	2'-9"	e	-----
C	F2203	31	8'-6"	STR.	TRANS TOP	539	c	1'-9"	f	-----
							d	9'-0"	g	2' 11- 5/16"
							STEM			
							a	2' 2-1/2"	ke	3'-0"
							j	1' 9-13/16"	kf	7'-9"
FOOTING DOWELS & STEM REINFORCEMENT							QUANTITIES			
D	F1604E	31	3'-0"	STR.	DOWEL FF	97	STRUCTURAL CONCRETE (1A43)			
E	F1905E	31	9'-4"	4'-7"	DOWEL BF	435	(FOOTING)			
F	F2206E	30	10'-4"	9'-1"	DOWEL BF	634	SPREAD		18.2	CU YD
G	S1301E	31	14'-2"	STR.	VERT FF	293				
H	S1602E	31	14'-2"	STR.	VERT BF	458	STRUCTURAL CONCRETE (3Y43)			
J	S1603E	----	-----	STR.	VERT BF	-----	(STEM)			
K	S1604E	31	10'-7"	4'-6"	TIE	342			35.6	CU YD
L	S1305E	34	30'-0"	STR.	HORIZ EF	681	REINFORCEMENT (PLAIN)			
M	S1606E	20	7'-4"	1'-4"	EXP JT TIE	153	SPREAD		1500	LB
N	S1607E	14	7'-9"	1'-9"	EXP JT TIE	113				
P	S1608E	-----	8'-2"	2'-2"	EXP JT TIE	-----	REINFORCEMENT (EPOXY)			
Q	S1609E	38	9'-1"	4'-0"	RAIL DOWEL	360	3566			LB

S.P. 179-020-031 S.P. 019-605-028

SHEET 6 OF 12

RETW5 PANEL TABULATIONS

DRAWN BY: GJ | CHECKED BY: HS | CERTIFIED BY _____ LICENSED PROFESSIONAL ENGINEER LIC. NO. 18520 DATE 6/18/12

STATE PROJ. NO. 1901-148 (T.H. 13) SHEET NO. 309 OF 442 SHEETS

PLOTTED/REVISED: 13-JUN-2012 16:01
DISTRICT #: METRO
IPLOT NAME: d190148_rw5
PATH & FILENAME: Projects/DM_ROS/013/1901/148/Design/Walls/RW5/d190148_rw5.dgn

BAR	MARK	NO.	LENGTH		LOCATION	WEIGHT	DIMENSIONS AND QUANTITIES			
h =17'	17' PANELS:		Y				PANEL LENGTH =		30'-6"	
SPREAD FOOTING REINFORCEMENT							DIMENSIONS			
							SPREAD FOOTING			
A	F1601	20	32'-11"	STR.	LONG T & B	687				
B	F1602	31	8'-6"	STR.	TRANS BOT	275	b	2'-9"	e	-----
C	F2203	31	8'-6"	STR.	TRANS TOP	539	c	1'-9"	f	-----
							d	9'-0"	g	2' 11- 5/16"
							STEM			
							a	2' 2-1/2"	ke	3'-0"
							j	1' 9-13/16"	kf	7'-9"
FOOTING DOWELS & STEM REINFORCEMENT							QUANTITIES			
D	F1604E	31	3'-0"	STR.	DOWEL FF	97	STRUCTURAL CONCRETE (1A43)			
E	F1905E	31	9'-4"	4'-7"	DOWEL BF	435	(FOOTING)			
F	F2206E	30	10'-4"	9'-1"	DOWEL BF	634	SPREAD		18.2	CU YD
G	S1301E	31	14'-2"	STR.	VERT FF	293				
H	S1602E	31	14'-2"	STR.	VERT BF	458	STRUCTURAL CONCRETE (3Y43)			
J	S1603E	----	-----	STR.	VERT BF	-----	(STEM)			
K	S1604E	31	10'-7"	4'-6"	TIE	342			35.6	CU YD
L	S1305E	34	30'-0"	STR.	HORIZ EF	681	REINFORCEMENT (PLAIN)			
M	S1606E	20	7'-4"	1'-4"	EXP JT TIE	153	SPREAD		1500	LB
N	S1607E	14	7'-9"	1'-9"	EXP JT TIE	113				
P	S1608E	-----	8'-2"	2'-2"	EXP JT TIE	-----	REINFORCEMENT (EPOXY)			
Q	S1609E	38	9'-1"	4'-0"	RAIL DOWEL	360	3566			LB

BAR	MARK	NO.	LENGTH		LOCATION	WEIGHT	DIMENSIONS AND QUANTITIES			
h =17'	17' PANELS:		A1				PANEL LENGTH =		30'-6"	
SPREAD FOOTING REINFORCEMENT							DIMENSIONS			
							SPREAD FOOTING			
A	F1601	20	32'-11"	STR.	LONG T & B	687				
B	F1602	31	8'-6"	STR.	TRANS BOT	275	b	2'-9"	e	-----
C	F2203	31	8'-6"	STR.	TRANS TOP	539	c	1'-9"	f	-----
							d	9'-0"	g	2' 11- 5/16"
							STEM			
							a	2' 2-1/2"	ke	2'-6 1/2"
							j	1' 9-13/16"	kf	7'-3"
FOOTING DOWELS & STEM REINFORCEMENT							QUANTITIES			
D	F1604E	31	3'-0"	STR.	DOWEL FF	97	STRUCTURAL CONCRETE (1A43)			
E	F1905E	31	9'-4"	4'-7"	DOWEL BF	435	(FOOTING)			
F	F2206E	30	10'-4"	9'-1"	DOWEL BF	634	SPREAD		18.2	CU YD
G	S1301E	31	14'-2"	STR.	VERT FF	293				
H	S1602E	31	14'-2"	STR.	VERT BF	458	STRUCTURAL CONCRETE (3Y43)			
J	S1603E	----	-----	STR.	VERT BF	-----	(STEM)			
K	S1604E	31	10'-7"	4'-6"	TIE	342			34.3	CU YD
L	S1305E	34	30'-0"	STR.	HORIZ EF	681	REINFORCEMENT (PLAIN)			
M	S1606E	20	7'-4"	1'-4"	EXP JT TIE	153	SPREAD		1500	LB
N	S1607E	14	7'-9"	1'-9"	EXP JT TIE	113				
P	S1608E	-----	8'-2"	2'-2"	EXP JT TIE	-----	REINFORCEMENT (EPOXY)			
Q	S1609E	38	9'-1"	4'-0"	RAIL DOWEL	360	3566			LB

BAR	MARK	NO.	LENGTH		LOCATION	WEIGHT	DIMENSIONS AND QUANTITIES			
h =17'	17' PANELS:		Z				PANEL LENGTH =		30'-6"	
SPREAD FOOTING REINFORCEMENT							DIMENSIONS			
							SPREAD FOOTING			
A	F1601	20	32'-11"	STR.	LONG T & B	687				
B	F1602	31	8'-6"	STR.	TRANS BOT	275	b	2'-9"	e	-----
C	F2203	31	8'-6"	STR.	TRANS TOP	539	c	1'-9"	f	-----
							d	9'-0"	g	2' 11- 5/16"
							STEM			
							a	2' 2-1/2"	ke	3'-0"
							j	1' 9-13/16"	kf	7'-9"
FOOTING DOWELS & STEM REINFORCEMENT							QUANTITIES			
D	F1604E	31	3'-0"	STR.	DOWEL FF	97	STRUCTURAL CONCRETE (1A43)			
E	F1905E	31	9'-4"	4'-7"	DOWEL BF	435	(FOOTING)			
F	F2206E	30	10'-4"	9'-1"	DOWEL BF	634	SPREAD		18.2	CU YD
G	S1301E	31	14'-2"	STR.	VERT FF	293				
H	S1602E	31	14'-2"	STR.	VERT BF	458	STRUCTURAL CONCRETE (3Y43)			
J	S1603E	----	-----	STR.	VERT BF	-----	(STEM)			
K	S1604E	31	10'-7"	4'-6"	TIE	342			35.6	CU YD
L	S1305E	34	30'-0"	STR.	HORIZ EF	681	REINFORCEMENT (PLAIN)			
M	S1606E	20	7'-4"	1'-4"	EXP JT TIE	153	SPREAD		1500	LB
N	S1607E	14	7'-9"	1'-9"	EXP JT TIE	113				
P	S1608E	-----	8'-2"	2'-2"	EXP JT TIE	-----	REINFORCEMENT (EPOXY)			
Q	S1609E	38	9'-1"	4'-0"	RAIL DOWEL	360	3566			LB

BAR	MARK	NO.	LENGTH		LOCATION	WEIGHT	DIMENSIONS AND QUANTITIES			
h =16'	16' PANELS:		A2				PANEL LENGTH =		30'-6"	
SPREAD FOOTING REINFORCEMENT							DIMENSIONS			
							SPREAD FOOTING			
A	F1601	18	32'-11"	STR.	LONG T & B	618				
B	F1602	31	8'-0"	STR.	TRANS BOT	259	b	2'-7"	e	-----
C	F1903	31	8'-0"	STR.	TRANS TOP	372	c	1'-9"	f	-----
							d	8'-6"	g	2' 9- 5/16"
							STEM			
							a	2'-2"	ke	2'-1"
							j	1' 9- 5/16"	kf	6'-9"
FOOTING DOWELS & STEM REINFORCEMENT							QUANTITIES			
D	F1604E	31	3'-0"	STR.	DOWEL FF	97	STRUCTURAL CONCRETE (1A43)			
E	F1905E	31	4'-10"	1'-0"	DOWEL BF	225	(FOOTING)			
F	F2206E	30	9'-4"	8'-1"	DOWEL BF	572	SPREAD		17.2	CU YD
G	S1301E	31	13'-2"	STR.	VERT FF	273				
H	S1602E	31	13'-2"	STR.	VERT BF	426	STRUCTURAL CONCRETE (3Y43)			
J	S1603E	----	-----	STR.	VERT BF	-----	(STEM)			
K	S1604E	31	10'-7"	4'-6"	TIE	342			33.1	CU YD
L	S1305E	32	30'-0"	STR.	HORIZ EF	641	REINFORCEMENT (PLAIN)			
M	S1606E	20	7'-4"	1'-4"	EXP JT TIE	153	SPREAD		1249	LB
N	S1607E	12	7'-9"	1'-9"	EXP JT TIE	97				
P	S1608E	-----	8'-2"	2'-2"	EXP JT TIE	-----	REINFORCEMENT (EPOXY)			
Q	S1609E	38	9'-1"	4'-0"	RAIL DOWEL	360	3186			LB

S.P. 179-020-031 S.P. 019-605-028

SHEET 7 OF 12

RETW5 PANEL TABULATIONS

DRAWN BY: GJ | CHECKED BY: HS | CERTIFIED BY _____ LICENSED PROFESSIONAL ENGINEER LIC. NO. 18520 DATE 6/18/12

STATE PROJ. NO. 1901-148 (T.H. 13) SHEET NO. 310 OF 442 SHEETS

PLOTTED/REVISED: 13-JUN-2012 16:03
DISTRICT #: METRO
IPLOT NAME: d190ll48_rw5
PATH & FILENAME: Projects/DM_ROS/013/1901/148/Design/Walls/RW5/d190ll48_rw5.dgn

BAR	MARK	NO.	LENGTH		LOCATION	WEIGHT	DIMENSIONS AND QUANTITIES			
h =16'	16' PANELS:			A3			PANEL LENGTH =		30'-6"	
SPREAD FOOTING REINFORCEMENT							DIMENSIONS			
							SPREAD FOOTING			
A	F1601	18	32'-11"	STR.	LONG T & B	618				
B	F1602	31	8'-0"	STR.	TRANS BOT	259	b	2'-7"	e	-----
C	F1903	31	8'-0"	STR.	TRANS TOP	372	c	1'-9"	f	-----
							d	8'-6"	g	2' 9- 5/16"
							STEM			
							a	2'-2"	ke	2'-1"
							j	1' 9- 5/16"	kf	6'-9"
FOOTING DOWELS & STEM REINFORCEMENT							QUANTITIES			
D	F1604E	31	3'-0"	STR.	DOWEL FF	97	STRUCTURAL CONCRETE (1A43)			
E	F1905E	31	4'-10"	1'-0"	DOWEL BF	225	(FOOTING)			
F	F2206E	30	9'-4"	8'-1"	DOWEL BF	572	SPREAD		17.2	CU YD
G	S1301E	31	13'-2"	STR.	VERT FF	273				
H	S1602E	31	13'-2"	STR.	VERT BF	426	STRUCTURAL CONCRETE (3Y43)			
J	S1603E	----	-----	STR.	VERT BF	-----	(STEM)			
K	S1604E	31	10'-7"	4'-6"	TIE	342			33.1	CU YD
L	S1305E	32	30'-0"	STR.	HORIZ EF	641	REINFORCEMENT (PLAIN)			
M	S1606E	20	7'-4"	1'-4"	EXP JT TIE	153	SPREAD		1249	LB
N	S1607E	12	7'-9"	1'-9"	EXP JT TIE	97				
P	S1608E	-----	8'-2"	2'-2"	EXP JT TIE	-----	REINFORCEMENT (EPOXY)			
Q	S1609E	38	9'-1"	4'-0"	RAIL DOWEL	360	3186			LB

BAR	MARK	NO.	LENGTH		LOCATION	WEIGHT	DIMENSIONS AND QUANTITIES			
h =16'	16' PANELS:			A4			PANEL LENGTH =		30'-6"	
SPREAD FOOTING REINFORCEMENT							DIMENSIONS			
							SPREAD FOOTING			
A	F1601	18	32'-11"	STR.	LONG T & B	618				
B	F1602	31	8'-0"	STR.	TRANS BOT	259	b	2'-7"	e	-----
C	F1903	31	8'-0"	STR.	TRANS TOP	372	c	1'-9"	f	-----
							d	8'-6"	g	2' 9- 5/16"
							STEM			
							a	2'-2"	ke	2'-1"
							j	1' 9- 5/16"	kf	6'-9"
FOOTING DOWELS & STEM REINFORCEMENT							QUANTITIES			
D	F1604E	31	3'-0"	STR.	DOWEL FF	97	STRUCTURAL CONCRETE (1A43)			
E	F1905E	31	4'-10"	1'-0"	DOWEL BF	225	(FOOTING)			
F	F2206E	30	9'-4"	8'-1"	DOWEL BF	572	SPREAD		17.2	CU YD
G	S1301E	31	13'-2"	STR.	VERT FF	273				
H	S1602E	31	13'-2"	STR.	VERT BF	426	STRUCTURAL CONCRETE (3Y43)			
J	S1603E	----	-----	STR.	VERT BF	-----	(STEM)			
K	S1604E	31	10'-7"	4'-6"	TIE	342			33.1	CU YD
L	S1305E	32	30'-0"	STR.	HORIZ EF	641	REINFORCEMENT (PLAIN)			
M	S1606E	20	7'-4"	1'-4"	EXP JT TIE	153	SPREAD		1249	LB
N	S1607E	12	7'-9"	1'-9"	EXP JT TIE	97				
P	S1608E	-----	8'-2"	2'-2"	EXP JT TIE	-----	REINFORCEMENT (EPOXY)			
Q	S1609E	38	9'-1"	4'-0"	RAIL DOWEL	360	3186			LB

BAR	MARK	NO.	LENGTH		LOCATION	WEIGHT	DIMENSIONS AND QUANTITIES			
h =16'	16' PANELS:			A5			PANEL LENGTH =		30'-6"	
SPREAD FOOTING REINFORCEMENT							DIMENSIONS			
							SPREAD FOOTING			
A	F1601	18	32'-11"	STR.	LONG T & B	618				
B	F1602	31	8'-0"	STR.	TRANS BOT	259	b	2'-7"	e	-----
C	F1903	31	8'-0"	STR.	TRANS TOP	372	c	1'-9"	f	-----
							d	8'-6"	g	2' 9- 5/16"
							STEM			
							a	2'-2"	ke	2'-1"
							j	1' 9- 5/16"	kf	6'-9"
FOOTING DOWELS & STEM REINFORCEMENT							QUANTITIES			
D	F1604E	31	3'-0"	STR.	DOWEL FF	97	STRUCTURAL CONCRETE (1A43)			
E	F1905E	31	4'-10"	1'-0"	DOWEL BF	225	(FOOTING)			
F	F2206E	30	9'-4"	8'-1"	DOWEL BF	572	SPREAD		17.2	CU YD
G	S1301E	31	13'-2"	STR.	VERT FF	273				
H	S1602E	31	13'-2"	STR.	VERT BF	426	STRUCTURAL CONCRETE (3Y43)			
J	S1603E	----	-----	STR.	VERT BF	-----	(STEM)			
K	S1604E	31	10'-7"	4'-6"	TIE	342			33.1	CU YD
L	S1305E	32	30'-0"	STR.	HORIZ EF	641	REINFORCEMENT (PLAIN)			
M	S1606E	20	7'-4"	1'-4"	EXP JT TIE	153	SPREAD		1249	LB
N	S1607E	12	7'-9"	1'-9"	EXP JT TIE	97				
P	S1608E	-----	8'-2"	2'-2"	EXP JT TIE	-----	REINFORCEMENT (EPOXY)			
Q	S1609E	38	9'-1"	4'-0"	RAIL DOWEL	360	3186			LB

BAR	MARK	NO.	LENGTH		LOCATION	WEIGHT	DIMENSIONS AND QUANTITIES			
h =16'	16' PANELS:			A6			PANEL LENGTH =		30'-6"	
SPREAD FOOTING REINFORCEMENT							DIMENSIONS			
							SPREAD FOOTING			
A	F1601	18	32'-11"	STR.	LONG T & B	618				
B	F1602	31	8'-0"	STR.	TRANS BOT	259	b	2'-7"	e	-----
C	F1903	31	8'-0"	STR.	TRANS TOP	372	c	1'-9"	f	-----
							d	8'-6"	g	2' 9- 5/16"
							STEM			
							a	2'-2"	ke	2'-1"
							j	1' 9- 5/16"	kf	6'-9"
FOOTING DOWELS & STEM REINFORCEMENT							QUANTITIES			
D	F1604E	31	3'-0"	STR.	DOWEL FF	97	STRUCTURAL CONCRETE (1A43)			
E	F1905E	31	4'-10"	1'-0"	DOWEL BF	225	(FOOTING)			
F	F2206E	30	9'-4"	8'-1"	DOWEL BF	572	SPREAD		17.2	CU YD
G	S1301E	31	13'-2"	STR.	VERT FF	273				
H	S1602E	31	13'-2"	STR.	VERT BF	426	STRUCTURAL CONCRETE (3Y43)			
J	S1603E	----	-----	STR.	VERT BF	-----	(STEM)			
K	S1604E	31	10'-7"	4'-6"	TIE	342			33.1	CU YD
L	S1305E	32	30'-0"	STR.	HORIZ EF	641	REINFORCEMENT (PLAIN)			
M	S1606E	20	7'-4"	1'-4"	EXP JT TIE	153	SPREAD		1249	LB
N	S1607E	12	7'-9"	1'-9"	EXP JT TIE	97				
P	S1608E	-----	8'-2"	2'-2"	EXP JT TIE	-----	REINFORCEMENT (EPOXY)			
Q	S1609E	38	9'-1"	4'-0"	RAIL DOWEL	360	3186			LB

S.P. 179-020-031 S.P. 019-605-028

SHEET 8 OF 12

RETW5 PANEL TABULATIONS

DRAWN BY: GJ | CHECKED BY: HS | CERTIFIED BY LICENSED PROFESSIONAL ENGINEER | LIC. NO. 18520 DATE 6/18/12

STATE PROJ. NO. 1901-148 (T.H. 13) SHEET NO. 311 OF 442 SHEETS

PLOTTED/REVISED: 13-JUN-2012 16:05
DISTRICT #: METRO
IPLOT NAME: d1901148_rw5
PATH & FILENAME: Projects/DM_ROS/013/1901/148/Design/Walls/RW5/d1901148_rw5.dgn

BAR	MARK	NO.	LENGTH		LOCATION	WEIGHT	DIMENSIONS AND QUANTITIES			
h =16'	16' PANELS:		A7				PANEL LENGTH =		30'-6"	
SPREAD FOOTING REINFORCEMENT							DIMENSIONS			
							SPREAD FOOTING			
A	F1601	18	32'-11"	STR.	LONG T & B	618				
B	F1602	31	8'-0"	STR.	TRANS BOT	259	b	2'-7"	e	-----
C	F1903	31	8'-0"	STR.	TRANS TOP	372	c	1'-9"	f	-----
							d	8'-6"	g	2' 9- 5/16"
							STEM			
							a	2'-2"	ke	2'-1"
							j	1' 9- 5/16"	kf	6'-9"
FOOTING DOWELS & STEM REINFORCEMENT							QUANTITIES			
D	F1604E	31	3'-0"	STR.	DOWEL FF	97	STRUCTURAL CONCRETE (1A43)			
E	F1905E	31	4'-10"	1'-0"	DOWEL BF	225	(FOOTING)			
F	F2206E	30	9'-4"	8'-1"	DOWEL BF	572	SPREAD		17.2	CU YD
G	S1301E	31	13'-2"	STR.	VERT FF	273				
H	S1602E	31	13'-2"	STR.	VERT BF	426	STRUCTURAL CONCRETE (3Y43)			
J	S1603E	----	-----	STR.	VERT BF	-----	(STEM)			
K	S1604E	31	10'-7"	4'-6"	TIE	342			33.1	CU YD
L	S1305E	32	30'-0"	STR.	HORIZ EF	641	REINFORCEMENT (PLAIN)			
M	S1606E	20	7'-4"	1'-4"	EXP JT TIE	153	SPREAD		1249	LB
N	S1607E	12	7'-9"	1'-9"	EXP JT TIE	97				
P	S1608E	-----	8'-2"	2'-2"	EXP JT TIE	-----	REINFORCEMENT (EPOXY)			
Q	S1609E	38	9'-1"	4'-0"	RAIL DOWEL	360	3186			LB

BAR	MARK	NO.	LENGTH		LOCATION	WEIGHT	DIMENSIONS AND QUANTITIES			
h =16'	16' PANELS:		A8				PANEL LENGTH =		30'-6"	
SPREAD FOOTING REINFORCEMENT							DIMENSIONS			
							SPREAD FOOTING			
A	F1601	18	32'-11"	STR.	LONG T & B	618				
B	F1602	31	8'-0"	STR.	TRANS BOT	259	b	2'-7"	e	-----
C	F1903	31	8'-0"	STR.	TRANS TOP	372	c	1'-9"	f	-----
							d	8'-6"	g	2' 9- 5/16"
							STEM			
							a	2'-2"	ke	2'-1"
							j	1' 9- 5/16"	kf	6'-9"
FOOTING DOWELS & STEM REINFORCEMENT							QUANTITIES			
D	F1604E	31	3'-0"	STR.	DOWEL FF	97	STRUCTURAL CONCRETE (1A43)			
E	F1905E	31	4'-10"	1'-0"	DOWEL BF	225	(FOOTING)			
F	F2206E	30	9'-4"	8'-1"	DOWEL BF	572	SPREAD		17.2	CU YD
G	S1301E	31	13'-2"	STR.	VERT FF	273				
H	S1602E	31	13'-2"	STR.	VERT BF	426	STRUCTURAL CONCRETE (3Y43)			
J	S1603E	----	-----	STR.	VERT BF	-----	(STEM)			
K	S1604E	31	10'-7"	4'-6"	TIE	342			33.1	CU YD
L	S1305E	32	30'-0"	STR.	HORIZ EF	641	REINFORCEMENT (PLAIN)			
M	S1606E	20	7'-4"	1'-4"	EXP JT TIE	153	SPREAD		1249	LB
N	S1607E	12	7'-9"	1'-9"	EXP JT TIE	97				
P	S1608E	-----	8'-2"	2'-2"	EXP JT TIE	-----	REINFORCEMENT (EPOXY)			
Q	S1609E	38	9'-1"	4'-0"	RAIL DOWEL	360	3186			LB

BAR	MARK	NO.	LENGTH		LOCATION	WEIGHT	DIMENSIONS AND QUANTITIES			
h =16'	16' PANELS:		A9				PANEL LENGTH =		30'-6"	
SPREAD FOOTING REINFORCEMENT							DIMENSIONS			
							SPREAD FOOTING			
A	F1601	18	32'-11"	STR.	LONG T & B	618				
B	F1602	31	8'-0"	STR.	TRANS BOT	259	b	2'-7"	e	-----
C	F1903	31	8'-0"	STR.	TRANS TOP	372	c	1'-9"	f	-----
							d	8'-6"	g	2' 9- 5/16"
							STEM			
							a	2'-2"	ke	2'-1"
							j	1' 9- 5/16"	kf	6'-9"
FOOTING DOWELS & STEM REINFORCEMENT							QUANTITIES			
D	F1604E	31	3'-0"	STR.	DOWEL FF	97	STRUCTURAL CONCRETE (1A43)			
E	F1905E	31	4'-10"	1'-0"	DOWEL BF	225	(FOOTING)			
F	F2206E	30	9'-4"	8'-1"	DOWEL BF	572	SPREAD		17.2	CU YD
G	S1301E	31	13'-2"	STR.	VERT FF	273				
H	S1602E	31	13'-2"	STR.	VERT BF	426	STRUCTURAL CONCRETE (3Y43)			
J	S1603E	----	-----	STR.	VERT BF	-----	(STEM)			
K	S1604E	31	10'-7"	4'-6"	TIE	342			33.1	CU YD
L	S1305E	32	30'-0"	STR.	HORIZ EF	641	REINFORCEMENT (PLAIN)			
M	S1606E	20	7'-4"	1'-4"	EXP JT TIE	153	SPREAD		1249	LB
N	S1607E	12	7'-9"	1'-9"	EXP JT TIE	97				
P	S1608E	-----	8'-2"	2'-2"	EXP JT TIE	-----	REINFORCEMENT (EPOXY)			
Q	S1609E	38	9'-1"	4'-0"	RAIL DOWEL	360	3186			LB

BAR	MARK	NO.	LENGTH		LOCATION	WEIGHT	DIMENSIONS AND QUANTITIES			
h =16'	16' PANELS:		B1				PANEL LENGTH =		30'-6"	
SPREAD FOOTING REINFORCEMENT							DIMENSIONS			
							SPREAD FOOTING			
A	F1601	18	32'-11"	STR.	LONG T & B	618				
B	F1602	31	8'-0"	STR.	TRANS BOT	259	b	2'-7"	e	-----
C	F1903	31	8'-0"	STR.	TRANS TOP	372	c	1'-9"	f	-----
							d	8'-6"	g	2' 9- 5/16"
							STEM			
							a	2'-2"	ke	2'-1"
							j	1' 9- 5/16"	kf	6'-1/2"
FOOTING DOWELS & STEM REINFORCEMENT							QUANTITIES			
D	F1604E	31	3'-0"	STR.	DOWEL FF	97	STRUCTURAL CONCRETE (1A43)			
E	F1905E	31	4'-10"	1'-0"	DOWEL BF	225	(FOOTING)			
F	F2206E	30	9'-4"	8'-1"	DOWEL BF	572	SPREAD		17.2	CU YD
G	S1301E	31	13'-2"	STR.	VERT FF	273				
H	S1602E	31	13'-2"	STR.	VERT BF	426	STRUCTURAL CONCRETE (3Y43)			
J	S1603E	----	-----	STR.	VERT BF	-----	(STEM)			
K	S1604E	31	10'-7"	4'-6"	TIE	342			31.9	CU YD
L	S1305E	32	30'-0"	STR.	HORIZ EF	641	REINFORCEMENT (PLAIN)			
M	S1606E	20	7'-4"	1'-4"	EXP JT TIE	153	SPREAD		1249	LB
N	S1607E	12	7'-9"	1'-9"	EXP JT TIE	97				
P	S1608E	-----	8'-2"	2'-2"	EXP JT TIE	-----	REINFORCEMENT (EPOXY)			
Q	S1609E	38	9'-1"	4'-0"	RAIL DOWEL	360	3186			LB

S.P. 179-020-031 S.P. 019-605-028

SHEET 9 OF 12

RETW5 PANEL TABULATIONS

DRAWN BY: GJ | CHECKED BY: HS | CERTIFIED BY _____ LICENSED PROFESSIONAL ENGINEER | LIC. NO. 18520 DATE 6/18/12

STATE PROJ. NO. 1901-148 (T.H. 13) SHEET NO. 312 OF 442 SHEETS

PLOTTED/REVISED: 13-JUN-2012 16:06

DISTRICT #: METRO
PLOT NAME: d1901148_rw5
PATH & FILENAME: Projects/DM_ROS/013/1901/148/Design/Walls/RW5/d1901148_rw5.dgn

BAR	MARK	NO.	LENGTH		LOCATION	WEIGHT	DIMENSIONS AND QUANTITIES			
h =15'	15' PANELS:		B2				PANEL LENGTH =		30'-6"	
SPREAD FOOTING REINFORCEMENT							DIMENSIONS			
							SPREAD FOOTING			
A	F1601	18	32'-11"	STR.	LONG T & B	618				
B	F1602	31	8'-0"	STR.	TRANS BOT	259	b	2'-7"	e	-----
C	F2203	31	8'-0"	STR.	TRANS TOP	507	c	1'-7"	f	-----
							d	8'-6"	g	2' 9- 5/16"
							STEM			
							a	2' 1-1/2"	ke	2'-1"
							j	1' 8-13/16"	kf	5'-4"
FOOTING DOWELS & STEM REINFORCEMENT							QUANTITIES			
D	F1604E	31	3'-0"	STR.	DOWEL FF	97	STRUCTURAL CONCRETE (1A43)			
E	F1905E	31	4'-8"	1'-0"	DOWEL BF	217	(FOOTING)			
F	F1906E	30	7'-7"	6'-6"	DOWEL BF	342	SPREAD		15.6	CU YD
G	S1301E	31	12'-2"	STR.	VERT FF	252				
H	S1602E	31	12'-2"	STR.	VERT BF	393	STRUCTURAL CONCRETE (3Y43)			
J	S1603E	----	-----	STR.	VERT BF	-----	(STEM)			
K	S1604E	31	10'-7"	4'-6"	TIE	342			30.7	CU YD
L	S1305E	30	30'-0"	STR.	HORIZ EF	601	REINFORCEMENT (PLAIN)			
M	S1606E	20	7'-4"	1'-4"	EXP JT TIE	153	SPREAD		1384	LB
N	S1607E	10	7'-9"	1'-9"	EXP JT TIE	81				
P	S1608E	-----	8'-2"	2'-2"	EXP JT TIE	-----	REINFORCEMENT (EPOXY)			
Q	S1609E	38	9'-1"	4'-0"	RAIL DOWEL	360	2839			LB

BAR	MARK	NO.	LENGTH		LOCATION	WEIGHT	DIMENSIONS AND QUANTITIES			
h =15'	15' PANELS:		B4				PANEL LENGTH =		30'-6"	
SPREAD FOOTING REINFORCEMENT							DIMENSIONS			
							SPREAD FOOTING			
A	F1601	18	32'-11"	STR.	LONG T & B	618				
B	F1602	31	8'-0"	STR.	TRANS BOT	259	b	2'-7"	e	-----
C	F2203	31	8'-0"	STR.	TRANS TOP	507	c	1'-7"	f	-----
							d	8'-6"	g	2' 9- 5/16"
							STEM			
							a	2' 1-1/2"	ke	2'-1"
							j	1' 8-13/16"	kf	4'-10"
FOOTING DOWELS & STEM REINFORCEMENT							QUANTITIES			
D	F1604E	31	3'-0"	STR.	DOWEL FF	97	STRUCTURAL CONCRETE (1A43)			
E	F1905E	31	4'-8"	1'-0"	DOWEL BF	217	(FOOTING)			
F	F1906E	30	7'-7"	6'-6"	DOWEL BF	342	SPREAD		15.6	CU YD
G	S1301E	31	12'-2"	STR.	VERT FF	252				
H	S1602E	31	12'-2"	STR.	VERT BF	393	STRUCTURAL CONCRETE (3Y43)			
J	S1603E	----	-----	STR.	VERT BF	-----	(STEM)			
K	S1604E	31	10'-7"	4'-6"	TIE	342			29.5	CU YD
L	S1305E	30	30'-0"	STR.	HORIZ EF	601	REINFORCEMENT (PLAIN)			
M	S1606E	20	7'-4"	1'-4"	EXP JT TIE	153	SPREAD		1384	LB
N	S1607E	10	7'-9"	1'-9"	EXP JT TIE	81				
P	S1608E	-----	8'-2"	2'-2"	EXP JT TIE	-----	REINFORCEMENT (EPOXY)			
Q	S1609E	38	9'-1"	4'-0"	RAIL DOWEL	360	2839			LB

BAR	MARK	NO.	LENGTH		LOCATION	WEIGHT	DIMENSIONS AND QUANTITIES			
h =15'	15' PANELS:		B3				PANEL LENGTH =		30'-6"	
SPREAD FOOTING REINFORCEMENT							DIMENSIONS			
							SPREAD FOOTING			
A	F1601	18	32'-11"	STR.	LONG T & B	618				
B	F1602	31	8'-0"	STR.	TRANS BOT	259	b	2'-7"	e	-----
C	F2203	31	8'-0"	STR.	TRANS TOP	507	c	1'-7"	f	-----
							d	8'-6"	g	2' 9- 5/16"
							STEM			
							a	2' 1-1/2"	ke	2'-1"
							j	1' 8-13/16"	kf	5'-4"
FOOTING DOWELS & STEM REINFORCEMENT							QUANTITIES			
D	F1604E	31	3'-0"	STR.	DOWEL FF	97	STRUCTURAL CONCRETE (1A43)			
E	F1905E	31	4'-8"	1'-0"	DOWEL BF	217	(FOOTING)			
F	F1906E	30	7'-7"	6'-6"	DOWEL BF	342	SPREAD		15.6	CU YD
G	S1301E	31	12'-2"	STR.	VERT FF	252				
H	S1602E	31	12'-2"	STR.	VERT BF	393	STRUCTURAL CONCRETE (3Y43)			
J	S1603E	----	-----	STR.	VERT BF	-----	(STEM)			
K	S1604E	31	10'-7"	4'-6"	TIE	342			30.7	CU YD
L	S1305E	30	30'-0"	STR.	HORIZ EF	601	REINFORCEMENT (PLAIN)			
M	S1606E	20	7'-4"	1'-4"	EXP JT TIE	153	SPREAD		1384	LB
N	S1607E	10	7'-9"	1'-9"	EXP JT TIE	81				
P	S1608E	-----	8'-2"	2'-2"	EXP JT TIE	-----	REINFORCEMENT (EPOXY)			
Q	S1609E	38	9'-1"	4'-0"	RAIL DOWEL	360	2839			LB

BAR	MARK	NO.	LENGTH		LOCATION	WEIGHT	DIMENSIONS AND QUANTITIES			
h =14'	14' PANELS:		B5				PANEL LENGTH =		30'-6"	
SPREAD FOOTING REINFORCEMENT							DIMENSIONS			
							SPREAD FOOTING			
A	F1601	18	32'-11"	STR.	LONG T & B	618				
B	F1602	31	8'-0"	STR.	TRANS BOT	259	b	2'-7"	e	-----
C	F2203	31	8'-0"	STR.	TRANS TOP	507	c	1'-7"	f	-----
							d	8'-6"	g	2' 9- 5/16"
							STEM			
							a	2'-1"	ke	2'-1"
							j	1' 8-3/8"	kf	4'-4"
FOOTING DOWELS & STEM REINFORCEMENT							QUANTITIES			
D	F1604E	31	3'-0"	STR.	DOWEL FF	97	STRUCTURAL CONCRETE (1A43)			
E	F1605E	31	4'-6"	0'-10"	DOWEL BF	145	(FOOTING)			
F	F1906E	30	6'-7"	5'-6"	DOWEL BF	297	SPREAD		15.6	CU YD
G	S1301E	31	11'-2"	STR.	VERT FF	231				
H	S1602E	31	11'-2"	STR.	VERT BF	361	STRUCTURAL CONCRETE (3Y43)			
J	S1603E	----	-----	STR.	VERT BF	-----	(STEM)			
K	S1604E	31	10'-7"	4'-6"	TIE	342			28.3	CU YD
L	S1305E	28	30'-0"	STR.	HORIZ EF	561	REINFORCEMENT (PLAIN)			
M	S1606E	20	7'-4"	1'-4"	EXP JT TIE	153	SPREAD		1384	LB
N	S1607E	8	7'-9"	1'-9"	EXP JT TIE	65				
P	S1608E	-----	8'-2"	2'-2"	EXP JT TIE	-----	REINFORCEMENT (EPOXY)			
Q	S1609E	38	9'-1"	4'-0"	RAIL DOWEL	360	2612			LB

S.P. 179-020-031 S.P. 019-605-028

SHEET 10 OF 12

RETW5 PANEL TABULATIONS

DRAWN BY: GJ | CHECKED BY: HS | CERTIFIED BY LICENSED PROFESSIONAL ENGINEER | LIC. NO. 18520 | DATE 6/18/12

STATE PROJ. NO. 1901-148 (T.H. 13) SHEET NO. 313 OF 442 SHEETS

PLOTTED/REVISED: 13-JUN-2012 16:07
DISTRICT #: METRO
IPLOT NAME: d1901148_rw5
PATH & FILENAME: Projects/DM_ROS/013/1901/148/Design/Walls/RW5/d1901148_rw5.dgn

BAR	MARK	NO.	LENGTH		LOCATION	WEIGHT	DIMENSIONS AND QUANTITIES			
h =14'	14' PANELS:		B6				PANEL LENGTH =		30'-6"	
SPREAD FOOTING REINFORCEMENT							DIMENSIONS			
							SPREAD FOOTING			
A	F1601	18	32'-11"	STR.	LONG T & B	618				
B	F1602	31	8'-0"	STR.	TRANS BOT	259	b	2'-7"	e	-----
C	F2203	31	8'-0"	STR.	TRANS TOP	507	c	1'-7"	f	-----
							d	8'-6"	g	2' 9- 5/16"
							STEM			
							a	2'-1"	ke	2'-1"
							j	1' 8-3/8"	kf	3'-10"
FOOTING DOWELS & STEM REINFORCEMENT							QUANTITIES			
D	F1604E	31	3'-0"	STR.	DOWEL FF	97	STRUCTURAL CONCRETE (1A43)			
E	F1605E	31	4'-6"	0'-10"	DOWEL BF	145	(FOOTING)			
F	F1906E	30	6'-7"	5'-6"	DOWEL BF	297	SPREAD		15.6	CU YD
G	S1301E	31	11'-2"	STR.	VERT FF	231				
H	S1602E	31	11'-2"	STR.	VERT BF	361	STRUCTURAL CONCRETE (3Y43)			
J	S1603E	----	-----	STR.	VERT BF	-----	(STEM)			
K	S1604E	31	10'-7"	4'-6"	TIE	342			27.1	CU YD
L	S1305E	28	30'-0"	STR.	HORIZ EF	561	REINFORCEMENT (PLAIN)			
M	S1606E	20	7'-4"	1'-4"	EXP JT TIE	153	SPREAD		1384	LB
N	S1607E	8	7'-9"	1'-9"	EXP JT TIE	65				
P	S1608E	-----	8'-2"	2'-2"	EXP JT TIE	-----	REINFORCEMENT (EPOXY)			
Q	S1609E	38	9'-1"	4'-0"	RAIL DOWEL	360	2612			LB

BAR	MARK	NO.	LENGTH		LOCATION	WEIGHT	DIMENSIONS AND QUANTITIES			
h =13'	13' PANELS:		B7				PANEL LENGTH =		30'-6"	
SPREAD FOOTING REINFORCEMENT							DIMENSIONS			
							SPREAD FOOTING			
A	F1601	18	32'-11"	STR.	LONG T & B	618				
B	F1602	31	8'-0"	STR.	TRANS BOT	259	b	2'-7"	e	-----
C	F2203	31	8'-0"	STR.	TRANS TOP	507	c	1'-5"	f	-----
							d	8'-6"	g	2' 9- 5/16"
							STEM			
							a	2' 0-1/2"	ke	2'-1"
							j	1' 7-7/8"	kf	3'-4"
FOOTING DOWELS & STEM REINFORCEMENT							QUANTITIES			
D	F1604E	31	3'-0"	STR.	DOWEL FF	97	STRUCTURAL CONCRETE (1A43)			
E	F1605E	31	4'-4"	0'-10"	DOWEL BF	140	(FOOTING)			
F	F1606E	30	5'-4"	4'-4"	DOWEL BF	167	SPREAD		14.0	CU YD
G	S1301E	31	10'-2"	STR.	VERT FF	211				
H	S1602E	31	10'-2"	STR.	VERT BF	329	STRUCTURAL CONCRETE (3Y43)			
J	S1603E	----	-----	STR.	VERT BF	-----	(STEM)			
K	S1604E	31	10'-7"	4'-6"	TIE	342			26.0	CU YD
L	S1305E	26	30'-0"	STR.	HORIZ EF	521	REINFORCEMENT (PLAIN)			
M	S1606E	20	7'-4"	1'-4"	EXP JT TIE	153	SPREAD		1384	LB
N	S1607E	6	7'-9"	1'-9"	EXP JT TIE	48				
P	S1608E	-----	8'-2"	2'-2"	EXP JT TIE	-----	REINFORCEMENT (EPOXY)			
Q	S1609E	38	9'-1"	4'-0"	RAIL DOWEL	360	2368			LB

BAR	MARK	NO.	LENGTH		LOCATION	WEIGHT	DIMENSIONS AND QUANTITIES			
h =13'	13' PANELS:		B8				PANEL LENGTH =		30'-6"	
SPREAD FOOTING REINFORCEMENT							DIMENSIONS			
							SPREAD FOOTING			
A	F1601	18	32'-11"	STR.	LONG T & B	618				
B	F1602	31	8'-0"	STR.	TRANS BOT	259	b	2'-7"	e	-----
C	F2203	31	8'-0"	STR.	TRANS TOP	507	c	1'-5"	f	-----
							d	8'-6"	g	2' 9- 5/16"
							STEM			
							a	2' 0-1/2"	ke	2'-1"
							j	1' 7-7/8"	kf	2'-10"
FOOTING DOWELS & STEM REINFORCEMENT							QUANTITIES			
D	F1604E	31	3'-0"	STR.	DOWEL FF	97	STRUCTURAL CONCRETE (1A43)			
E	F1605E	31	4'-4"	0'-10"	DOWEL BF	140	(FOOTING)			
F	F1606E	30	5'-4"	4'-4"	DOWEL BF	167	SPREAD		14.0	CU YD
G	S1301E	31	10'-2"	STR.	VERT FF	211				
H	S1602E	31	10'-2"	STR.	VERT BF	329	STRUCTURAL CONCRETE (3Y43)			
J	S1603E	----	-----	STR.	VERT BF	-----	(STEM)			
K	S1604E	31	10'-7"	4'-6"	TIE	342			24.8	CU YD
L	S1305E	26	30'-0"	STR.	HORIZ EF	521	REINFORCEMENT (PLAIN)			
M	S1606E	20	7'-4"	1'-4"	EXP JT TIE	153	SPREAD		1384	LB
N	S1607E	6	7'-9"	1'-9"	EXP JT TIE	48				
P	S1608E	-----	8'-2"	2'-2"	EXP JT TIE	-----	REINFORCEMENT (EPOXY)			
Q	S1609E	38	9'-1"	4'-0"	RAIL DOWEL	360	2368			LB

BAR	MARK	NO.	LENGTH		LOCATION	WEIGHT	DIMENSIONS AND QUANTITIES			
h =12'	12' PANELS:		B9				PANEL LENGTH =		30'-6"	
SPREAD FOOTING REINFORCEMENT							DIMENSIONS			
							SPREAD FOOTING			
A	F1601	18	32'-11"	STR.	LONG T & B	618				
B	F1602	31	8'-0"	STR.	TRANS BOT	259	b	2'-7"	e	-----
C	F2203	31	8'-0"	STR.	TRANS TOP	507	c	1'-5"	f	-----
							d	8'-6"	g	2' 9- 5/16"
							STEM			
							a	2'-0"	ke	2'-1"
							j	1' 7-3/8"	kf	2'-2 1/2"
FOOTING DOWELS & STEM REINFORCEMENT							QUANTITIES			
D	F1604E	31	3'-0"	STR.	DOWEL FF	97	STRUCTURAL CONCRETE (1A43)			
E	F1605E	31	4'-4"	0'-10"	DOWEL BF	140	(FOOTING)			
F	F1606E	30	4'-4"	3'-4"	DOWEL BF	136	SPREAD		14.0	CU YD
G	S1301E	31	9'-2"	STR.	VERT FF	190				
H	S1602E	31	9'-2"	STR.	VERT BF	296	STRUCTURAL CONCRETE (3Y43)			
J	S1603E	----	-----	STR.	VERT BF	-----	(STEM)			
K	S1604E	31	10'-7"	4'-6"	TIE	342			22.6	CU YD
L	S1305E	24	30'-0"	STR.	HORIZ EF	481	REINFORCEMENT (PLAIN)			
M	S1606E	20	7'-4"	1'-4"	EXP JT TIE	153	SPREAD		1384	LB
N	S1607E	4	7'-9"	1'-9"	EXP JT TIE	32				
P	S1608E	-----	8'-2"	2'-2"	EXP JT TIE	-----	REINFORCEMENT (EPOXY)			
Q	S1609E	38	9'-1"	4'-0"	RAIL DOWEL	360	2227			LB

S.P. 179-020-031 S.P. 019-605-028

SHEET 11 OF 12

RETW5 PANEL TABULATIONS

DRAWN BY: GJ | CHECKED BY: HS | CERTIFIED BY _____ LICENSED PROFESSIONAL ENGINEER | LIC. NO. 18520 DATE 6/18/12

STATE PROJ. NO. 1901-148 (T.H. 13) SHEET NO. 314 OF 442 SHEETS

PLOTTED/REVISED: 13-JUN-2012 16:09
DISTRICT #: METRO
IPLOT NAME: d1901148_rw5
PATH & FILENAME: Projects/DM_ROS/013/1901/148/Design/Walls/RW5/d1901148_rw5.dgn

BAR	MARK	NO.	LENGTH		LOCATION	WEIGHT	DIMENSIONS AND QUANTITIES			
h =11'	11' PANELS:			C1			PANEL LENGTH =		30'-6"	
SPREAD FOOTING REINFORCEMENT							DIMENSIONS			
							SPREAD FOOTING			
A	F1601	18	32'-11"	STR.	LONG T & B	618				
B	F1602	31	8'-0"	STR.	TRANS BOT	259	b	2'-7"	e	-----
C	F2203	31	8'-0"	STR.	TRANS TOP	507	c	1'-5"	f	-----
							d	8'-6"	g	2' 9- 5/16"
							STEM			
							a	1' 11-1/2"	ke	2'-1"
							j	1' 6-7/8"	kf	1'-1/2"
FOOTING DOWELS & STEM REINFORCEMENT							QUANTITIES			
D	F1604E	31	3'-0"	STR.	DOWEL FF	97	STRUCTURAL CONCRETE (1A43)			
E	F1605E	31	4'-4"	0'-10"	DOWEL BF	140	(FOOTING)			
F	F1606E	30	4'-1"	3'-1"	DOWEL BF	128	SPREAD		14.0	CU YD
G	S1301E	31	6'-6"	STR.	VERT FF	135				
H	S1602E	31	6'-6"	STR.	VERT BF	210	STRUCTURAL CONCRETE (3Y43)			
J	S1603E	----	-----	STR.	VERT BF	-----	(STEM)			
K	S1604E	31	10'-7"	4'-6"	TIE	342			17.1	CU YD
L	S1305E	22	30'-0"	STR.	HORIZ EF	441	REINFORCEMENT (PLAIN)			
M	S1606E	20	7'-4"	1'-4"	EXP JT TIE	153	SPREAD		1384	LB
N	S1607E	2	7'-9"	1'-9"	EXP JT TIE	16				
P	S1608E	-----	8'-2"	2'-2"	EXP JT TIE	-----	REINFORCEMENT (EPOXY)			
Q	S1609E	38	9'-1"	4'-0"	RAIL DOWEL	360	2110			LB

BAR	MARK	NO.	LENGTH		LOCATION	WEIGHT	DIMENSIONS AND QUANTITIES			
h =7'	7' PANELS:			C2			PANEL LENGTH =		30'-6"	
SPREAD FOOTING REINFORCEMENT							DIMENSIONS			
							SPREAD FOOTING			
A	F1601	18	32'-11"	STR.	LONG T & B	618				
B	F1602	31	8'-0"	STR.	TRANS BOT	259	b	2'-7"	e	-----
C	F1903	31	8'-0"	STR.	TRANS TOP	372	c	1'-5"	f	-----
							d	8'-6"	g	2' 9- 5/16"
							STEM			
							a	1' 9-1/2"	ke	2'-1"
							j	1' 4-7/8"	kf	0"
FOOTING DOWELS & STEM REINFORCEMENT							QUANTITIES			
D	F1604E	31	3'-0"	STR.	DOWEL FF	97	STRUCTURAL CONCRETE (1A43)			
E	F1605E	31	4'-4"	0'-10"	DOWEL BF	140	(FOOTING)			
F	F1606E	----	---	0'-0"	DOWEL BF	-----	SPREAD		14.0	CU YD
G	S1301E	31	4'-2"	STR.	VERT FF	86				
H	S1602E	31	4'-6"	STR.	VERT BF	145	STRUCTURAL CONCRETE (3Y43)			
J	S1603E	----	-----	STR.	VERT BF	-----	(STEM)			
K	S1604E	31	10'-7"	4'-6"	TIE	342			13.0	CU YD
L	S1305E	14	30'-0"	STR.	HORIZ EF	281	REINFORCEMENT (PLAIN)			
M	S1606E	14	7'-4"	1'-4"	EXP JT TIE	107	SPREAD		1249	LB
N	S1607E	-----	7'-9"	1'-9"	EXP JT TIE	-----				
P	S1608E	-----	8'-2"	2'-2"	EXP JT TIE	-----	REINFORCEMENT (EPOXY)			
Q	S1609E	38	9'-1"	4'-0"	RAIL DOWEL	360	1548			LB

BAR	MARK	NO.	LENGTH		LOCATION	WEIGHT	DIMENSIONS AND QUANTITIES			
h =7'	7' PANELS:			C3			PANEL LENGTH =		30'-6"	
SPREAD FOOTING REINFORCEMENT							DIMENSIONS			
							SPREAD FOOTING			
A	F1601	18	32'-11"	STR.	LONG T & B	618				
B	F1602	31	8'-0"	STR.	TRANS BOT	259	b	2'-7"	e	-----
C	F1903	31	8'-0"	STR.	TRANS TOP	372	c	1'-5"	f	-----
							d	8'-6"	g	2' 9- 5/16"
							STEM			
							a	1' 9-1/2"	ke	2'-1"
							j	1' 4-7/8"	kf	0"
FOOTING DOWELS & STEM REINFORCEMENT							QUANTITIES			
D	F1604E	31	3'-0"	STR.	DOWEL FF	97	STRUCTURAL CONCRETE (1A43)			
E	F1605E	31	4'-4"	0'-10"	DOWEL BF	140	(FOOTING)			
F	F1606E	----	---	0'-0"	DOWEL BF	-----	SPREAD		14.0	CU YD
G	S1301E	31	4'-2"	STR.	VERT FF	86				
H	S1602E	31	4'-6"	STR.	VERT BF	145	STRUCTURAL CONCRETE (3Y43)			
J	S1603E	----	-----	STR.	VERT BF	-----	(STEM)			
K	S1604E	31	10'-7"	4'-6"	TIE	342			12.0	CU YD
L	S1305E	14	30'-0"	STR.	HORIZ EF	281	REINFORCEMENT (PLAIN)			
M	S1606E	14	7'-4"	1'-4"	EXP JT TIE	107	SPREAD		1249	LB
N	S1607E	-----	7'-9"	1'-9"	EXP JT TIE	-----				
P	S1608E	-----	8'-2"	2'-2"	EXP JT TIE	-----	REINFORCEMENT (EPOXY)			
Q	S1609E	38	9'-1"	4'-0"	RAIL DOWEL	360	1548			LB

S.P. 179-020-031 S.P. 019-605-028

SHEET 12 OF 12

RETW5 PANEL TABULATIONS

DRAWN BY: GJ | CHECKED BY: HS | CERTIFIED BY _____ LICENSED PROFESSIONAL ENGINEER | LIC. NO. 18520 DATE 7/30/12

STATE PROJ. NO. 1901-148 (T.H. 13) SHEET NO. 315 OF 442 SHEETS

DISTRICT #: METRO
IPLOT NAME: d190l148_rw5
PATH & FILENAME: Projects/DM_ROS/013/1901/148/Design/Walls/RW5/d190l148_rw5.dgn
PLOTTED/REVISED: 30-JUL-2012 10:38

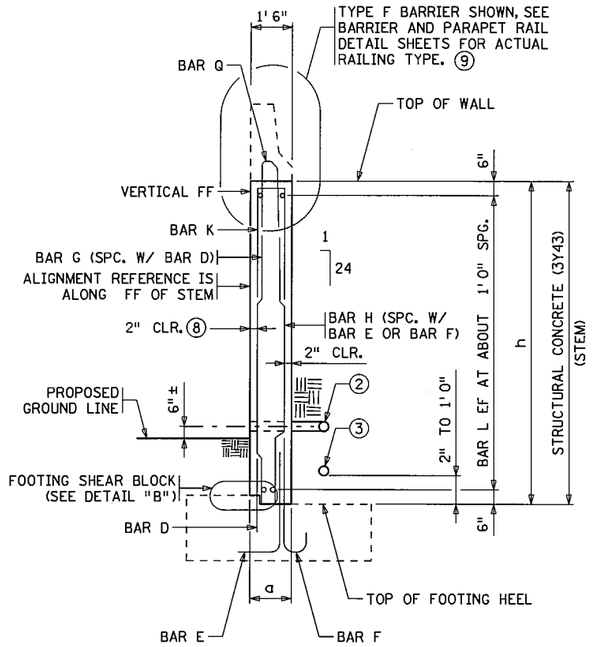

WALL SECTION

BARRIER OPTION SHOWN

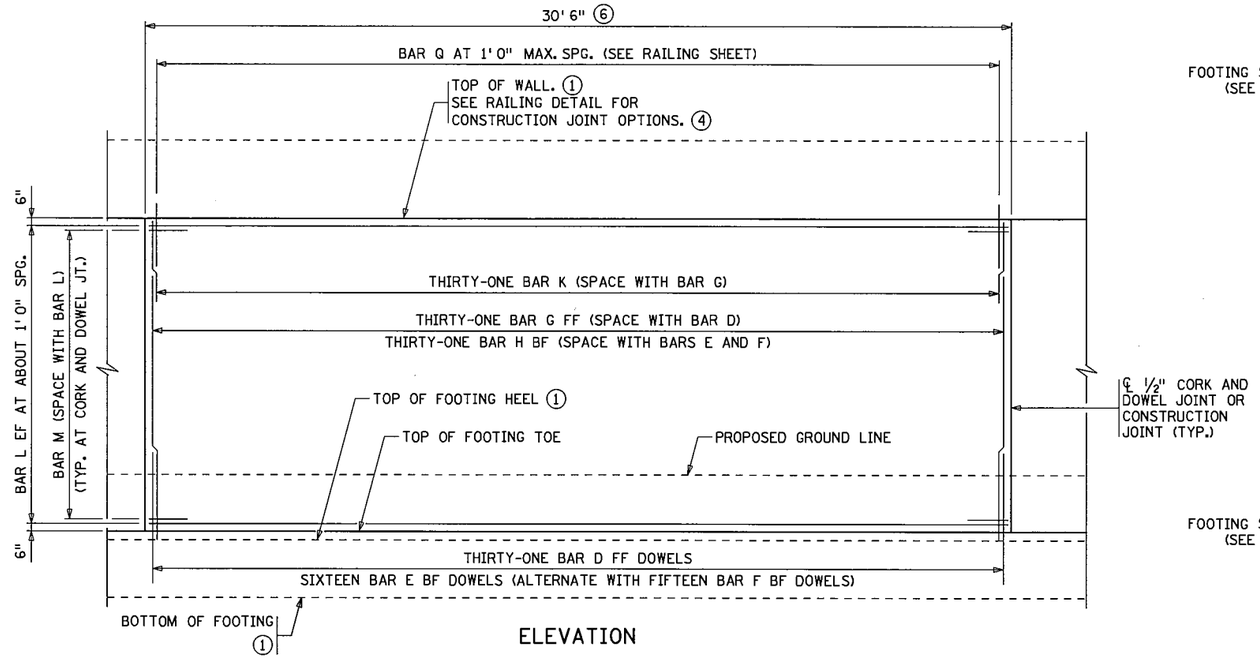

ELEVATION

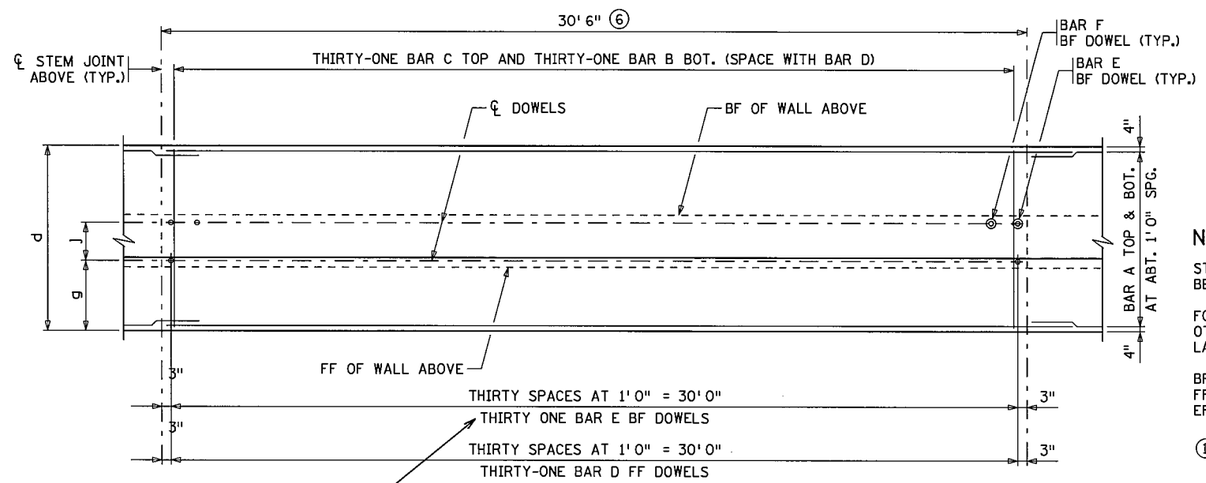

FOOTING PLAN ~ REINFORCEMENT

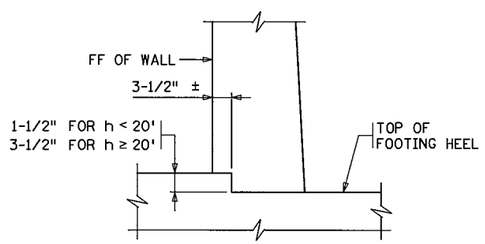

DETAIL "B"

CHANGED TEXT FROM SIXTEEN TO THIRTY ONE.
DELETED TEXT (ALTERNATE WITH FIFTEEN BAR F BF DOWELS) #

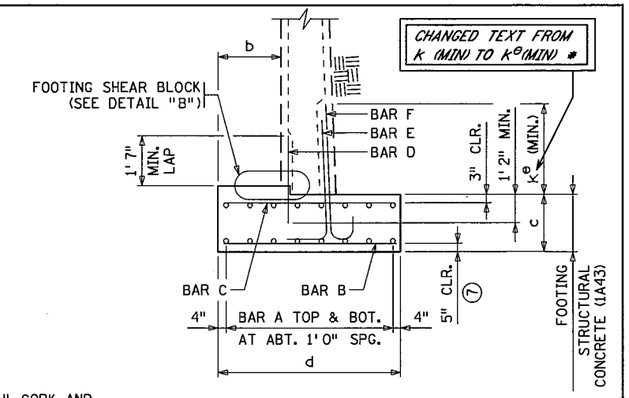

TYPICAL SECTION THROUGH SPREAD FOOTING

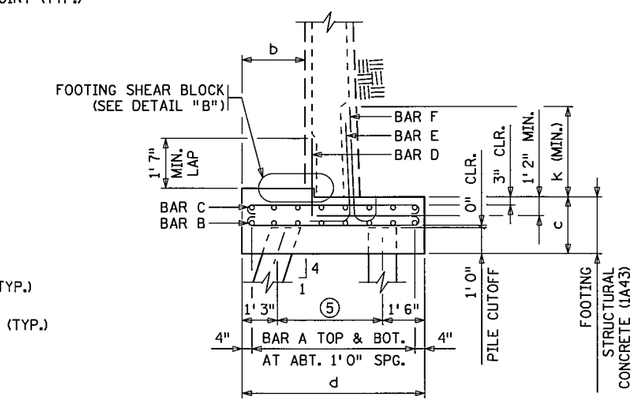

TYPICAL SECTION THROUGH PILE FOOTING

NOTES:

STEM REINFORCEMENT IS TO BE SYMMETRICALLY/EQUALLY SPACED BETWEEN STEM JOINTS.

FOOTING REINFORCEMENT SYMMETRICAL ABOUT STEM JOINT ABOVE UNLESS OTHERWISE NOTED. SEE RETAINING WALL TABLES FOR PILE SPACING AND LAYOUT.

BF DENOTES BACK FACE.
FF DENOTES FRONT FACE.
EF DENOTES EACH FACE.

(1) STRAIGHT LINE BETWEEN ELEVATIONS SHOWN ON WALL ELEVATION (EXCEPT FOR STEPPED CONDITIONS). IF A BARRIER IS NOT USED, TOPS OF RETAINING WALL COULD BE USED.

(2) TYPE I DRAIN. SEE DETAIL "A" ON STANDARD PLAN 5-297.624 (1).

(3) TYPE II DRAIN. SEE DETAIL "A" ON STANDARD PLAN 5-297.624 (1).

(4) SEE STANDARD PLAN 5-297.624 (1).

(5) SEE GENERAL PLAN FOR PILE SPACING.

(6) AT THE CONTRACTOR'S OPTION, PANEL LENGTH MAY VARY UP TO ± 1' 0". BAR CUTTING LISTS SHALL BE REVISED ACCORDINGLY BY THE CONTRACTOR.

(7) 5" CLR. FOR ALL BARS EXCEPT 2" CLR. MIN. FOR BAR D.

(8) SEE DETAIL "C" ON STANDARD PLAN 5-297.624(1).

(9) REBAR AND CONCRETE ARE INCLUDED IN THE PAY ITEM BY LINEAR FEET FOR THE BARRIER.

SHEET 1 OF 5

S.P. 179-020-031 S.P. 019-605-028

MODIFIED

REVISED: 5-28-2010	I HEREBY CERTIFY THAT SHEETS 316 TO 320 HAVE BEEN PREPARED BY ME OR UNDER MY DIRECT SUPERVISION AND I AM A DULY LICENSED PROFESSIONAL ENGINEER UNDER THE LAWS OF THE STATE OF MINNESOTA.
APPROVED: MAY 31, 2006 — STATE BRIDGE ENGINEER	KHALID OBEIDAT — DATE 6/18/12 LIC. NO. 41868
* DENOTES MODIFICATION FROM STANDARD PLAN	STANDARD SHEET NO. ~~5-297.621~~ — STANDARD APPROVED: ~~MAY 28, 2010~~

TITLE: RETAINING WALL REINFORCEMENT DETAILS (SHORT WALLS) RWALL 5

STATE PROJ. NO. 1901-148 (TH 13) SHEET NO. 316 OF 442 SHEETS

PLOTTED/REVISED: 12-JUN-2012 14:28
DISTRICT #: METRO
USER NAME: modified_s621_l_spn
PATH & FILENAME: Projects/DM_ROS/013/1901/148/Design/Walls/RW5/modified_s621_l_spn.dgn
FILE NAME: modified_s621_l_spn

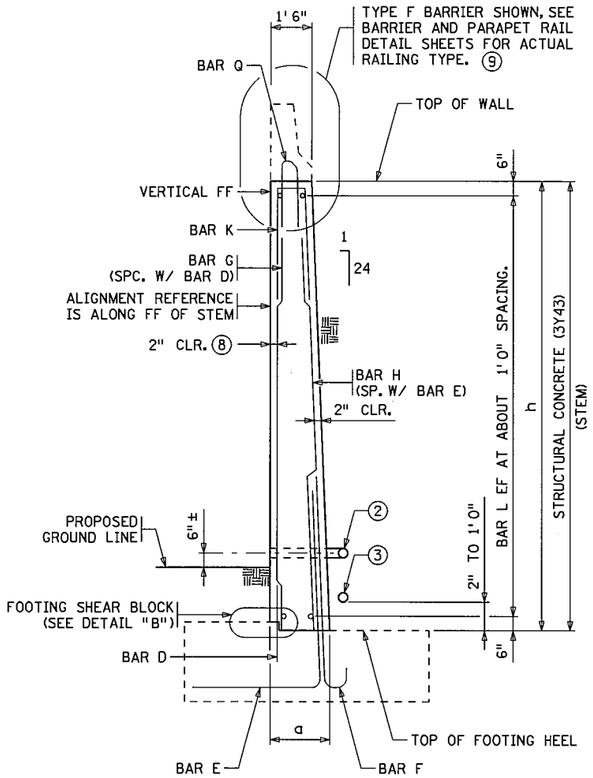

WALL SECTION

BARRIER OPTION SHOWN

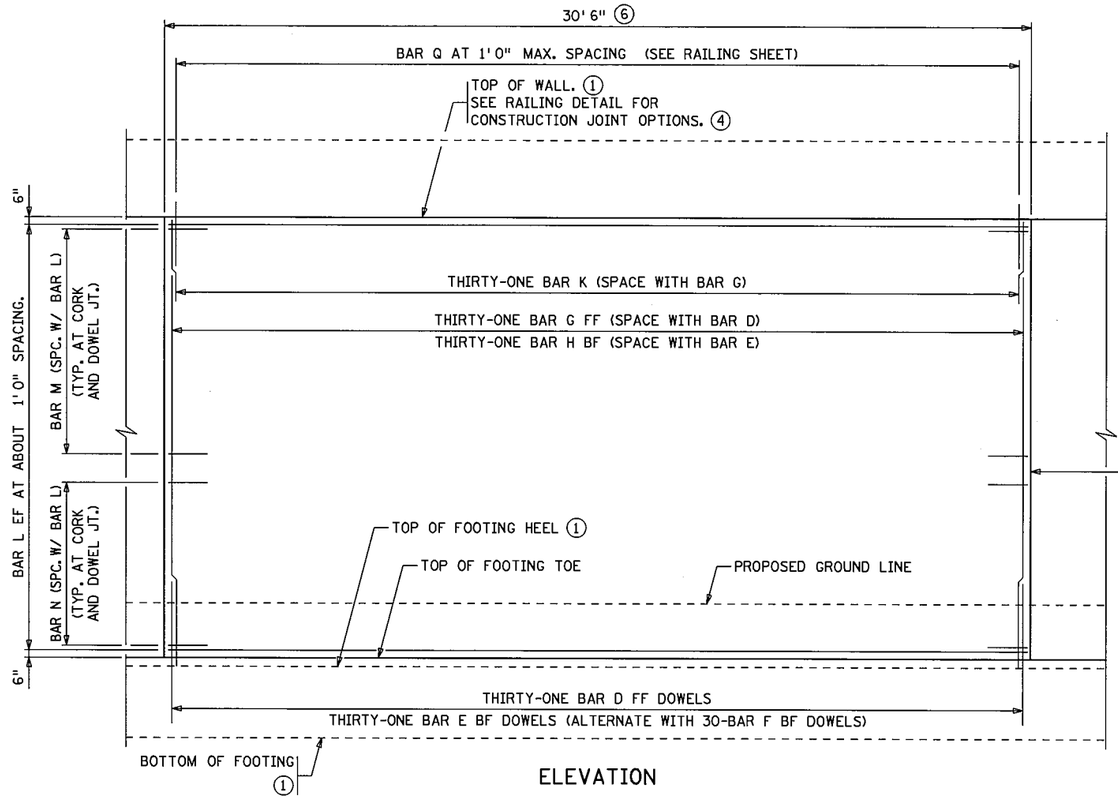

ELEVATION

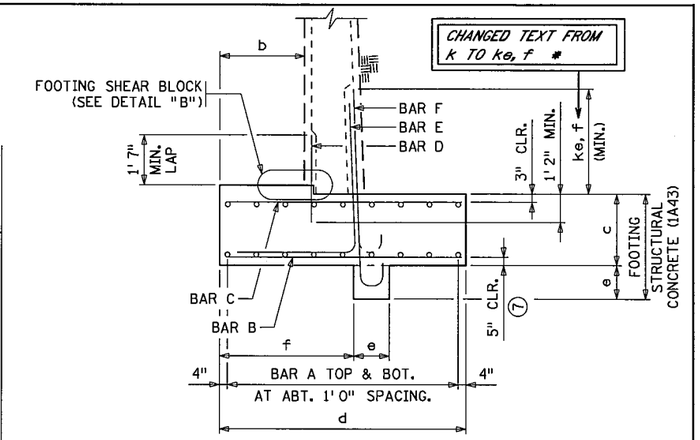

TYPICAL SECTION THROUGH SPREAD FOOTING

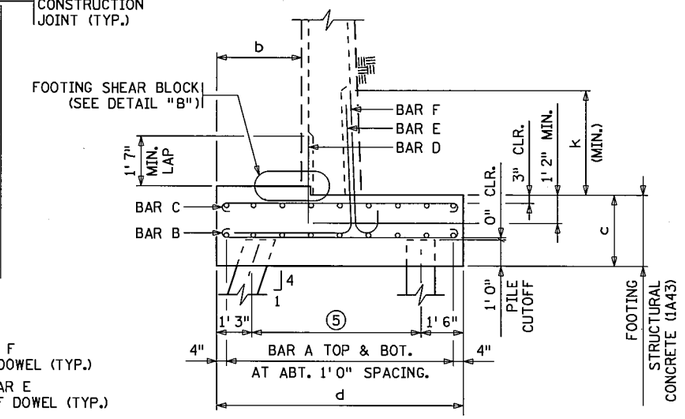

TYPICAL SECTION THROUGH PILE FOOTING

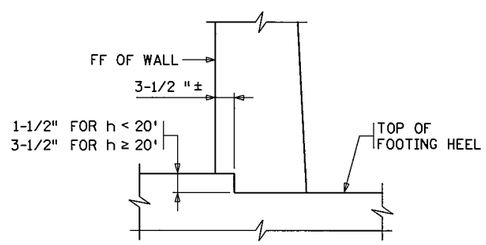

DETAIL "B"

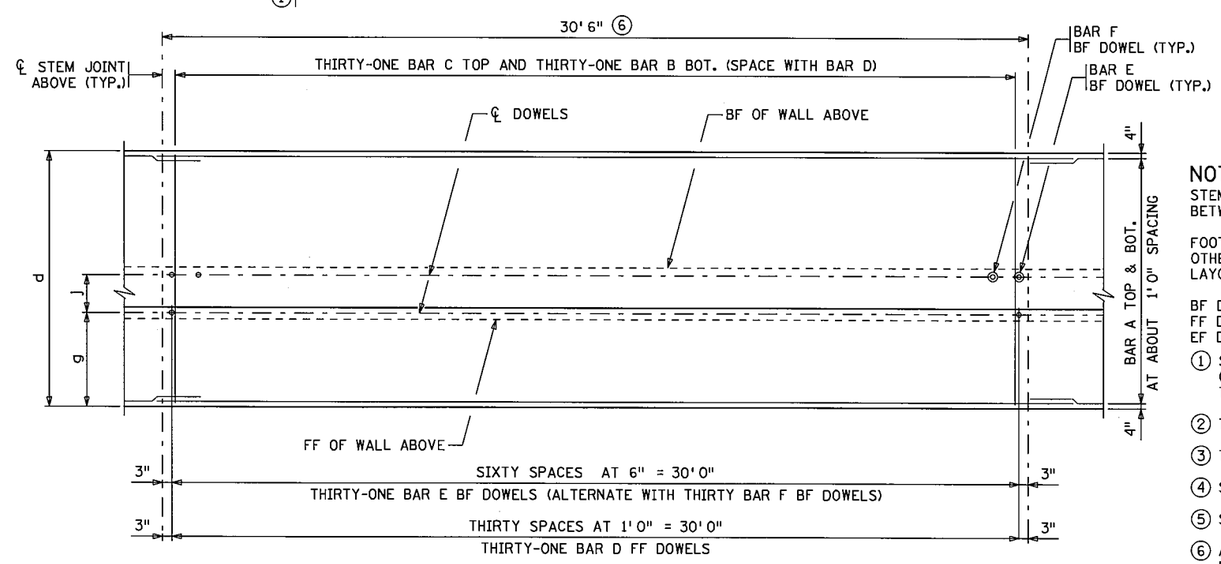

FOOTING PLAN ~ REINFORCEMENT

℄ ½" CORK AND DOWEL JOINT OR CONSTRUCTION JOINT (TYP.)

NOTES:

STEM REINFORCEMENT IS TO BE SYMMETRICALLY/EQUALLY SPACED BETWEEN STEM JOINTS.

FOOTING REINFORCEMENT SYMMETRICAL ABOUT STEM JOINT ABOVE UNLESS OTHERWISE NOTED. SEE RETAINING WALL TABLES FOR PILE SPACING AND LAYOUT.

BF DENOTES BACK FACE.
FF DENOTES FRONT FACE.
EF DENOTES EACH FACE.

(1) STRAIGHT LINE BETWEEN ELEVATIONS SHOWN ON WALL ELEVATION (EXCEPT FOR STEPPED CONDITIONS). IF A BARRIER IS NOT USED, TOPS OF RETAINING WALL COULD BE USED.

(2) TYPE I DRAIN. SEE DETAIL "A" ON STANDARD PLAN 5-297.624 (1).

(3) TYPE II DRAIN. SEE DETAIL "A" ON STANDARD PLAN 5-297.624 (1).

(4) SEE STANDARD PLAN 5-297.624 (1).

(5) SEE GENERAL PLAN FOR PILE SPACING.

(6) AT THE CONTRACTOR'S OPTION, PANEL LENGTHS MAY VARY UP TO ± 1' 0". BAR CUTTING LISTS SHALL BE REVISED ACCORDINGLY BY THE CONTRACTOR.

(7) 5" CLR. FOR ALL BARS EXCEPT 2" CLR. MIN. FOR BAR D.

(8) SEE DETAIL "C" ON STANDARD PLAN 5-297.624(1).

(9) REBAR AND CONCRETE ARE INCLUDED IN THE PAY ITEM BY LINEAR FEET FOR THE BARRIER.

SHEET 2 OF 5

MODIFIED

REVISED: 5-28-2010	
APPROVED: MAY 31, 2006	
STATE BRIDGE ENGINEER	

* DENOTES MODIFICATION FROM STANDARD PLAN

S.P. 179-020-031 S.P. 019-605-028

STANDARD SHEET NO. ~~5-297.622~~
STANDARD APPROVED: MAY 28, 2010

TITLE: RETAINING WALL REINFORCEMENT DETAILS (MEDIUM WALLS) RWALL 5

CERTIFIED BY Khalid M Obeidat LICENSED PROFESSIONAL ENGINEER LIC. NO. 41868 DATE 6/18/12

STATE PROJ. NO. 1901-148 (TH 13) SHEET NO. 317 OF 442 SHEETS

PLOTTED/REVISED: 13-JUN-2012 09:03
DISTRICT #: METRO
USER NAME: modified_s622_l_spn
PATH & FILENAME: Projects/DM_ROS/013/1901/148/Design/Walls/RW5/modified_s622_l_spndgn
FILE NAME: modified_s622_l_spn

PLOTTED/REVISED: 13-JUN-2012 09:03

DISTRICT #: METRO
USER NAME: modified_s628_4_spn
PATH & FILENAME: Projects/DM_ROS/013/190/148/Design/Walls/RW5/modified_s628_4_spn.dgn
FILE NAME: modified_s628_4_spn

h = 24' PANELS: L=30'-6"

BAR	MARK	NO.	LENGTH	A	LOCATION	WT.	DIMENSIONS & QUANTITIES				
SPREAD FOOTING REINFORCEMENT							DIMENSIONS				
A	F1901	26	33'-5"	STR.	LONG T & B	1305	SPREAD FOOTING				
B	F1902	31	12'-1"	STR.	TRANS BOT	563	b	5'-3"	e	1'-4"	
C	F2503	31	12'-1"	STR.	TRANS TOP	1000	c	2'-9"	f	7'-5 3/8"	
							d	12'-9"	g	5'-5 5/16"	
PILE FOUNDATION REINFORCEMENT							PILE FOUNDATION				
A	F__01	26		STR.	LONG T & B		b	5'-0"	d	12'-9"	
B	F1902	31	13'-7"	12'-3"	TRANS BOT	632	c		g	5'-2 5/16"	
C	F2503	31	14'-1"	12'-3"	TRANS TOP	1166					
							STEM				
							a	2'-6"	k	6'-6"	
							j	2'-1 1/8"			
FOOTING DOWELS & STEM REINFORCEMENT							QUANTITIES				
D	F1604E	31	3'-0"	STR.	DOWEL FF	97	STRUCTURAL CONCRETE (1A43)				
E	F2905E	31	15'-10"	7'-0"	DOWEL BF	1669	(FOOTING)				
F	F2906E	30	11'-7"	10'-4"	DOWEL BF	1148	SPREAD	43.4	CU YD		
G	S1301E	31	21'-3"	STR.	VERT FF	440	PILE		CU YD		
H	S2202E	31	21'-3"	STR.	VERT BF	1346	STRUCTURAL CONCRETE (3Y43)				
J	S2203E	30	12'-0"	STR.	VERT BF	736	(STEM)				
K	S1604E	31	10'-7"	4'-9"	TIE	342	54.2	CU YD			
L	S1305E	48	30'-0"	STR.	HORIZ EF	962	REINFORCEMENT (PLAIN)				
M	S1606E	20	7'-4"	1'-4"	EXP JT TIE	153	SPREAD	2868	LB		
N	S1607E	20	7'-9"	1'-9"	EXP JT TIE	162	PILE		LB		
P	S1608E	8	8'-2"	2'-2"	EXP JT TIE	68	REINFORCEMENT (EPOXY)				
Q	S1609E	38	8'-7"	4'-0"	RAIL DOWEL	340	7157	LB			
Q	S1609E	36	6'-1"	2'-8"	F-RAILDOWEL	229					

h = 25' PANELS: L=30'-6"

BAR	MARK	NO.	LENGTH	A	LOCATION	WT.	DIMENSIONS & QUANTITIES				
SPREAD FOOTING REINFORCEMENT							DIMENSIONS				
A	F1901	28	33'-5"	STR.	LONG T & B	1405	SPREAD FOOTING				
B	F1902	31	12'-9"	STR.	TRANS BOT	594	b	5'-6"	e	1'-6"	
C	F2503	31	12'-9"	STR.	TRANS TOP	1055	c	2'-9"	f	7'-8 7/8"	
							d	13'-3"	g	5'-8 5/16"	
PILE FOUNDATION REINFORCEMENT							PILE FOUNDATION				
A	F__01	28		STR.	LONG T & B		b	5'-3"	d	13'-3"	
B	F1902	31	14'-1"	12'-9"	TRANS BOT	656	c		g	5'-5 5/16"	
C	F2503	31	14'-7"	12'-9"	TRANS TOP	1207					
							STEM				
							a	2'-6 1/2"	k	6'-5"	
							j	2'-1 9/16"			
FOOTING DOWELS & STEM REINFORCEMENT							QUANTITIES				
D	F1604E	31	3'-0"	STR.	DOWEL FF	97	STRUCTURAL CONCRETE (1A43)				
E	F3205E	31	16'-0"	7'-3"	DOWEL BF	2134	(FOOTING)				
F	F3206E	30	11'-10"	10'-5"	DOWEL BF	1463	SPREAD	45.6	CU YD		
G	S1301E	31	22'-3"	STR.	VERT FF	461	PILE		CU YD		
H	S2502E	31	22'-3"	STR.	VERT BF	1842	STRUCTURAL CONCRETE (3Y43)				
J	S2503E	30	10'-6"	STR.	VERT BF	841	(STEM)				
K	S1604E	31	10'-7"	4'-9"	TIE	342	57.0	CU YD			
L	S1305E	50	30'-0"	STR.	HORIZ EF	1002	REINFORCEMENT (PLAIN)				
M	S1606E	20	7'-4"	1'-4"	EXP JT TIE	153	SPREAD	3054	LB		
N	S1607E	20	7'-9"	1'-9"	EXP JT TIE	162	PILE		LB		
P	S1608E	10	8'-2"	2'-2"	EXP JT TIE	85	REINFORCEMENT (EPOXY)				
Q	S1609E	38	8'-7"	4'-0"	RAIL DOWEL	340	8646	LB			
Q	S1609E	36	6'-1"	2'-8"	F-RAILDOWEL	229					

h = 26' PANELS: L=30'-6"

BAR	MARK	NO.	LENGTH	A	LOCATION	WT.	DIMENSIONS & QUANTITIES				
SPREAD FOOTING REINFORCEMENT							DIMENSIONS				
A	F1901	28	33'-5"	STR.	LONG T & B	1405	SPREAD FOOTING				
B	F1902	31	13'-3"	STR.	TRANS BOT	617	b	5'-10"	e	1'-6"	
C	F2503	31	13'-3"	STR.	TRANS TOP	1097	c	3'-0"	f	8'-1 1/2"	
							d	13'-9"	g	6'-0 5/16"	
PILE FOUNDATION REINFORCEMENT							PILE FOUNDATION				
A	F__01	28		STR.	LONG T & B		b	5'-6"	d	13'-9"	
B	F1902	31	14'-7"	13'-3"	TRANS BOT	679	c		g	5'-8 5/16"	
C	F2503	31	15'-1"	13'-3"	TRANS TOP	1248					
							STEM				
							a	2'-7"	k	6'-5"	
							j	2'-2 1/16"			
FOOTING DOWELS & STEM REINFORCEMENT							QUANTITIES				
D	F1604E	31	3'-0"	STR.	DOWEL FF	97	STRUCTURAL CONCRETE (1A43)				
E	F3205E	31	16'-7"	7'-7"	DOWEL BF	2212	(FOOTING)				
F	F3206E	30	12'-1"	10'-8"	DOWEL BF	1495	SPREAD	51.2	CU YD		
G	S1301E	31	23'-3"	STR.	VERT FF	481	PILE		CU YD		
H	S2502E	31	23'-3"	STR.	VERT BF	1924	STRUCTURAL CONCRETE (3Y43)				
J	S2503E	30	11'-6"	STR.	VERT BF	921	(STEM)				
K	S1604E	31	10'-7"	4'-9"	TIE	342	59.9	CU YD			
L	S1305E	52	30'-0"	STR.	HORIZ EF	1042	REINFORCEMENT (PLAIN)				
M	S1606E	20	7'-4"	1'-4"	EXP JT TIE	153	SPREAD	3119	LB		
N	S1607E	20	7'-9"	1'-9"	EXP JT TIE	162	PILE		LB		
P	S1608E	12	8'-2"	2'-2"	EXP JT TIE	102	REINFORCEMENT (EPOXY)				
Q	S1609E	38	8'-7"	4'-0"	RAIL DOWEL	340	8997	LB			
Q	S1609E	36	6'-1"	2'-8"	F-RAILDOWEL	229					

h = PANELS: L=

BAR	MARK	NO.	LENGTH	A	LOCATION	WT.	DIMENSIONS & QUANTITIES				
SPREAD FOOTING REINFORCEMENT							DIMENSIONS				
A	F__01			STR.	LONG T & B		SPREAD FOOTING				
B	F__02			STR.	TRANS BOT		b		e		
C	F__03			STR.	TRANS TOP		c		f		
							d		g		
PILE FOUNDATION REINFORCEMENT							PILE FOUNDATION				
A	F__01			STR.	LONG T & B		b		d		
B	F__02				TRANS BOT		c		g		
C	F__03				TRANS TOP						
							STEM				
							a		k		
							j				
FOOTING DOWELS & STEM REINFORCEMENT							QUANTITIES				
D	F1604E		3'-0"	STR.	DOWEL FF		STRUCTURAL CONCRETE (1A43)				
E	F__05E				DOWEL BF		(FOOTING)				
F	F__06E				DOWEL BF		SPREAD		CU YD		
G	S1301E			STR.	VERT FF		PILE		CU YD		
H	S__02E			STR.	VERT BF		STRUCTURAL CONCRETE (3Y43)				
J	S__03E			STR.	VERT BF		(STEM)				
K	S1604E				TIE				CU YD		
L	S1305E			STR.	HORIZ EF		REINFORCEMENT (PLAIN)				
M	S1606E		7'-4"	1'-4"	EXP JT TIE		SPREAD		LB		
N	S1607E		7'-9"	1'-9"	EXP JT TIE		PILE		LB		
P	S1608E		8'-2"	2'-2"	EXP JT TIE		REINFORCEMENT (EPOXY)				
Q	S1609E		8'-7"	4'-0"	RAIL DOWEL				LB		
Q	S1609E		6'-1"	2'-8"	F-RAILDOWEL						

h = 27' PANELS: L=30'-6"

BAR	MARK	NO.	LENGTH	A	LOCATION	WT.	DIMENSIONS & QUANTITIES				
SPREAD FOOTING REINFORCEMENT							DIMENSIONS				
A	F2201	30	34'-2"	STR.	LONG T & B	2095	SPREAD FOOTING				
B	F1902	31	13'-10"	STR.	TRANS BOT	644	b	6'-2"	e	1'-6"	
C	F2503	31	13'-10"	STR.	TRANS TOP	1145	c	3'-3"	f	8'-6 1/8"	
							d	14'-4"	g	6'-4 5/16"	
PILE FOUNDATION REINFORCEMENT							PILE FOUNDATION				
A	F__01	30		STR.	LONG T & B		b	5'-9"	d	14'-3"	
B	F__02	31	13'-9"		TRANS BOT		c		g	5'-11 5/16"	
C	F2903	31	16'-3"	13'-9"	TRANS TOP	1713					
							STEM				
							a	2'-7 1/2"	k	7'-0"	
							j	2'-2 9/16"			
FOOTING DOWELS & STEM REINFORCEMENT							QUANTITIES				
D	F1604E	31	3'-0"	STR.	DOWEL FF	97	STRUCTURAL CONCRETE (1A43)				
E	F3205E	31	17'-8"	7'-10"	DOWEL BF	2357	(FOOTING)				
F	F3206E	30	12'-11"	11'-6"	DOWEL BF	1603	SPREAD	57.3	CU YD		
G	S1301E	31	24'-3"	STR.	VERT FF	502	PILE		CU YD		
H	S2502E	31	24'-3"	STR.	VERT BF	2007	STRUCTURAL CONCRETE (3Y43)				
J	S2503E	30	12'-6"	STR.	VERT BF	1001	(STEM)				
K	S1604E	31	10'-7"	4'-9"	TIE	342	62.8	CU YD			
L	S1305E	54	30'-0"	STR.	HORIZ EF	1082	REINFORCEMENT (PLAIN)				
M	S1606E	20	7'-4"	1'-4"	EXP JT TIE	153	SPREAD	3884	LB		
N	S1607E	20	7'-9"	1'-9"	EXP JT TIE	162	PILE		LB		
P	S1608E	14	8'-2"	2'-2"	EXP JT TIE	119	REINFORCEMENT (EPOXY)				
Q	S1609E	38	8'-7"	4'-0"	RAIL DOWEL	340	9490	LB			
Q	S1609E	36	6'-1"	2'-8"	F-RAILDOWEL	229					

h = 28' PANELS: L=30'-6"

BAR	MARK	NO.	LENGTH	A	LOCATION	WT.	DIMENSIONS & QUANTITIES				
SPREAD FOOTING REINFORCEMENT							DIMENSIONS				
A	F2201	30	34'-2"	STR.	LONG T & B	2095	SPREAD FOOTING				
B	F1902	31	14'-6"	STR.	TRANS BOT	675	b	6'-6"	e	1'-7"	
C	F2903	31	14'-6"	STR.	TRANS TOP	1528	c	3'-3"	f	8'-10 5/8"	
							d	15'-0"	g	6'-8 5/16"	
PILE FOUNDATION REINFORCEMENT							PILE FOUNDATION				
A	F__01	30		STR.	LONG T & B		b	6'-0"	d	14'-9"	
B	F1902	31	15'-7"	14'-3"	TRANS BOT	726	c	3'-3"	g	6'-2 5/16"	
C	F2903	31	16'-9"	14'-3"	TRANS TOP	1765					
							STEM				
							a	2'-8"	k	8'-1"	
							j	2'-3"			
FOOTING DOWELS & STEM REINFORCEMENT							QUANTITIES				
D	F1604E	31	3'-0"	STR.	DOWEL FF	97	STRUCTURAL CONCRETE (1A43)				
E	F3605E	31	19'-1"	8'-2"	DOWEL BF	3143	(FOOTING)				
F	F3606E	30	14'-3"	12'-8"	DOWEL BF	2178	SPREAD	60.1	CU YD		
G	S1301E	31	25'-3"	STR.	VERT FF	523	PILE	56.2	CU YD		
H	S2902E	31	25'-3"	STR.	VERT BF	2661	STRUCTURAL CONCRETE (3Y43)				
J	S2903E	30	13'-0"	STR.	VERT BF	1326	(STEM)				
K	S1604E	31	10'-7"	4'-9"	TIE	342	65.8	CU YD			
L	S1305E	56	30'-0"	STR.	HORIZ EF	1122	REINFORCEMENT (PLAIN)				
M	S1606E	20	7'-4"	1'-4"	EXP JT TIE	153	SPREAD	4298	LB		
N	S1607E	20	7'-9"	1'-9"	EXP JT TIE	162	PILE		LB		
P	S1608E	16	8'-2"	2'-2"	EXP JT TIE	136	REINFORCEMENT (EPOXY)				
Q	S1609E	38	8'-7"	4'-0"	RAIL DOWEL	340	11937	LB			
Q	S1609E	36	6'-1"	2'-8"	F-RAILDOWEL	229					

h = 29' PANELS: L=30'-6"

BAR	MARK	NO.	LENGTH	A	LOCATION	WT.	DIMENSIONS & QUANTITIES				
SPREAD FOOTING REINFORCEMENT							DIMENSIONS				
A	F2201	32	34'-2"	STR.	LONG T & B	2235	SPREAD FOOTING				
B	F1902	31	15'-0"	STR.	TRANS BOT	698	b	6'-10"	e	1'-7"	
C	F2903	31	15'-0"	STR.	TRANS TOP	1581	c	3'-6"	f	9'-3 1/4"	
							d	15'-6"	g	7'-0 5/16"	
PILE FOUNDATION REINFORCEMENT							PILE FOUNDATION				
A	F__01	32		STR.	LONG T & B		b	6'-2"	d	15'-3"	
B	F1902	31	16'-1"	14'-9"	TRANS BOT	749	c		g	6'-4 5/16"	
C	F2903	31	17'-3"	14'-9"	TRANS TOP	1818					
							STEM				
							a	2'-8 1/2"	k	8'-1"	
							j	2'-3 1/2"			
FOOTING DOWELS & STEM REINFORCEMENT							QUANTITIES				
D	F1604E	31	3'-0"	STR.	DOWEL FF	97	STRUCTURAL CONCRETE (1A43)				
E	F3605E	31	19'-6"	8'-4"	DOWEL BF	3212	(FOOTING)				
F	F3606E	30	14'-6"	12'-11"	DOWEL BF	2218	SPREAD	66.5	CU YD		
G	S1301E	31	26'-3"	STR.	VERT FF	544	PILE		CU YD		
H	S2902E	31	26'-3"	STR.	VERT BF	2767	STRUCTURAL CONCRETE (3Y43)				
J	S2903E	30	14'-0"	STR.	VERT BF	1428	(STEM)				
K	S1604E	31	10'-7"	4'-9"	TIE	342	68.9	CU YD			
L	S1305E	58	30'-0"	STR.	HORIZ EF	1162	REINFORCEMENT (PLAIN)				
M	S1606E	20	7'-4"	1'-4"	EXP JT TIE	153	SPREAD	4514	LB		
N	S1607E	20	7'-9"	1'-9"	EXP JT TIE	162	PILE		LB		
P	S1608E	18	8'-2"	2'-2"	EXP JT TIE	153	REINFORCEMENT (EPOXY)				
Q	S1609E	38	8'-7"	4'-0"	RAIL DOWEL	340	12331	LB			
Q	S1609E	36	6'-1"	2'-8"	F-RAILDOWEL	229					

h = PANELS: L=

BAR	MARK	NO.	LENGTH	A	LOCATION	WT.	DIMENSIONS & QUANTITIES				
SPREAD FOOTING REINFORCEMENT							DIMENSIONS				
A	F__01			STR.	LONG T & B		SPREAD FOOTING				
B	F__02			STR.	TRANS BOT		b		e		
C	F__03			STR.	TRANS TOP		c		f		
							d		g		
PILE FOUNDATION REINFORCEMENT							PILE FOUNDATION				
A	F__01			STR.	LONG T & B		b		d		
B	F__02				TRANS BOT		c		g		
C	F__03				TRANS TOP						
							STEM				
							a		k		
							j				
FOOTING DOWELS & STEM REINFORCEMENT							QUANTITIES				
D	F1604E		3'-0"	STR.	DOWEL FF		STRUCTURAL CONCRETE (1A43)				
E	F__05E				DOWEL BF		(FOOTING)				
F	F__06E				DOWEL BF		SPREAD		CU YD		
G	S1301E			STR.	VERT FF		PILE		CU YD		
H	S__02E			STR.	VERT BF		STRUCTURAL CONCRETE (3Y43)				
J	S__03E			STR.	VERT BF		(STEM)				
K	S1604E				TIE				CU YD		
L	S1305E			STR.	HORIZ EF		REINFORCEMENT (PLAIN)				
M	S1606E		7'-4"	1'-4"	EXP JT TIE		SPREAD		LB		
N	S1607E		7'-9"	1'-9"	EXP JT TIE		PILE		LB		
P	S1608E		8'-2"	2'-2"	EXP JT TIE		REINFORCEMENT (EPOXY)				
Q	S1609E		8'-7"	4'-0"	RAIL DOWEL				LB		
Q	S1609E		6'-1"	2'-8"	F-RAILDOWEL						

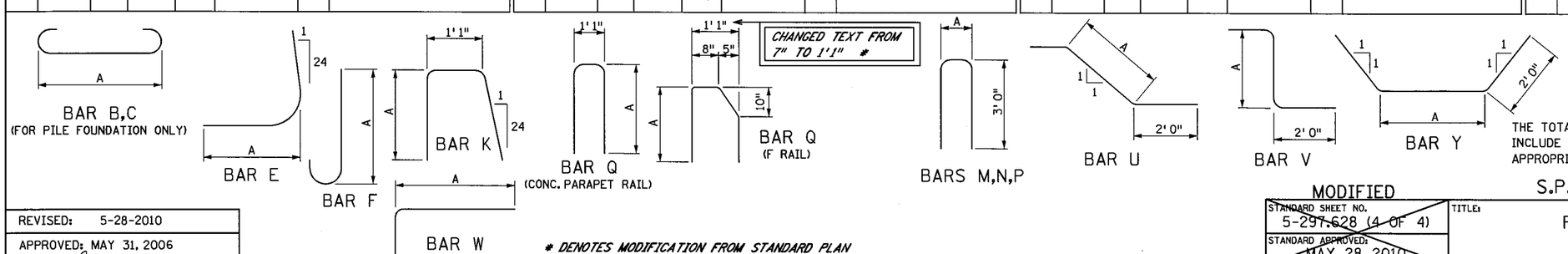

* DENOTES MODIFICATION FROM STANDARD PLAN

NOTES:
L = PANEL LENGTH
F.F. = FRONT FACE
B.F. = BACK FACE
E.F. = EACH FACE

BARS MARKED WITH THE SUFFIX "E" ARE EPOXY COATED.
FOR PILE FOUNDATION REINFORCEMENT, SEE TABLE .
THE TOTAL WEIGHT SHOWN UNDER THE EPOXY COATED REINFORCEMENT DOES NOT INCLUDE RAIL DOWEL BARS. IF A RAIL IS USED ON THE RETAINING WALL, THE APPROPRIATE WEIGHT OF RAIL DOWEL BARS SHALL BE ADDED.

MODIFIED

S.P. 179-020-031 S.P. 019-605-028 SHEET 3 OF 5

REVISED: 5-28-2010
APPROVED: MAY 31, 2006
STATE BRIDGE ENGINEER

STANDARD SHEET NO. 5-297.628 (4 OF 4)
STANDARD APPROVED: MAY 28, 2010

TITLE: RETAINING WALL PANEL TABULATIONS (LIVE LOAD SURCHARGE) RWALL5

CERTIFIED BY Khalid M Obeidat LICENSED PROFESSIONAL ENGINEER LIC. NO. 41868 DATE 6/18/12

STATE PROJ. NO. 1901-148 (TH 13) SHEET NO. 318 OF 442 SHEETS

Wall Loading Case:

LL Surcharge w 10' Noiswall

WALL REINFORCEMENT - SPREAD FOOTING

WALL HEIGHT	STEM	FOOTING		
	DOWEL SIZE AND SPACING	TOE (BOTTOM TRANSVERSE) ①	HEEL (TOP TRANSVERSE) ②	LONGITUDINAL (TOP AND BOT.)
h		BAR SIZE & SPA.	BAR SIZE & SPA.	BAR SIZE & SPA.
5	#16 @ 12"	#16 @ 12"	#16 @ 12"	#16 @ 12"
6	#16 @ 12"	#16 @ 12"	#19 @ 12"	#16 @ 12"
7	#16 @ 12"	#16 @ 12"	#19 @ 12"	#16 @ 12"
8	#16 @ 12"	#16 @ 12"	#19 @ 12"	#16 @ 12"
9	#16 @ 12"	#16 @ 12"	#19 @ 12"	#16 @ 12"
10	#16 @ 12"	#16 @ 12"	#19 @ 12"	#16 @ 12"
11	#16 @ 12"	#16 @ 12"	#22 @ 12"	#16 @ 12"
12	#16 @ 12"	#16 @ 12"	#22 @ 12"	#16 @ 12"
13	#16 @ 12"	#16 @ 12"	#22 @ 12"	#16 @ 12"
14	#16 @ 12"	#16 @ 12"	#22 @ 12"	#16 @ 12"
15	#19 @ 12"	#16 @ 12"	#22 @ 12"	#16 @ 12"
16	#19 @ 12"	#16 @ 12"	#19 @ 12"	#16 @ 12"
17	#19 @ 12"	#16 @ 12"	#22 @ 12"	#16 @ 12"
18	#19 @ 12"	#16 @ 12"	#22 @ 12"	#16 @ 12"
19	#22 @ 12"	#16 @ 12"	#25 @ 12"	#16 @ 12"

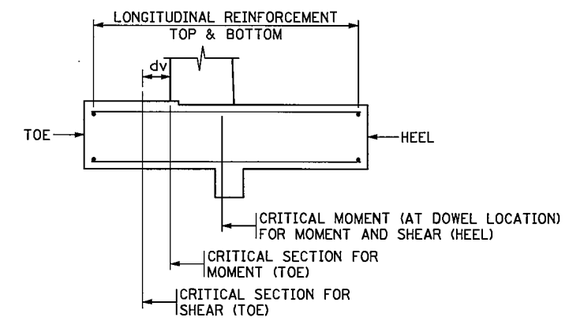

TYPICAL SECTION

NOTES:

FOOTING BAR SIZE, #16 BAR MINIMUM, PER Mn/DOT

① AREA OF STEEL PROVIDED INCLUDES BACK FACE STEM DOWELS, EXCLUDING #16 DOWELS, SEE STEM REINFORCEMENT.

② BASED ON GROSS SOIL LOAD ON HEEL.

SPREAD FOOTING REINFORCEMENT
DETAILS FOR RETAINING WALL 5

S.P. 179-020-031 S.P. 019-605-028

RETAINING WALL SPREAD FOOTING REINFORCEMENT DETAILS

DRAWN BY: RN | CHECKED BY: HS | CERTIFIED BY Khalid M Obeidat LICENSED PROFESSIONAL ENGINEER | LIC. NO. 41868 DATE 6/18/12

STATE PROJ. NO. 1901-148 (T.H. 13) SHEET NO. 319 OF 442 SHEETS

PLOTTED/REVISED: 13-JUN-2012 09:01
DISTRICT #: METRO
IPLOT NAME: d190148_rw5_dtl
FILENAME: Projects/DM_ROS/013/190/148/Design/Walls/RW5/d190148_rw5_dtl.dgn

Wall Loading Case:
LL Surcharge w 10' Noiswall

WALL GEOMETRICS AND DATA - SPREAD FOOTING							QUANTITIES PER FOOT - SPREAD FOOTING					APPLIED LOADS RECTANGULAR			
STEM HEIGHT h	STEM WIDTH a	TOE WIDTH b	FOOTING THICKNESS c	FOOTING WIDTH d	SHEAR KEY SIZE e	SHEAR KEY LOCATION f	STRUCTURAL CONCRETE	REINFORCEMENT			WALL DETAILING SCHEME	STRENGTH		SERVICE	
							1A43 CU. YD. FOOTING	3Y43 CU. YD. STEM	PLAIN POUND	EPOXY POUND		EFFECTIVE WIDTH B'	EFFECTIVE PRESSURE KSF	EFFECTIVE WIDTH B'	EFFECTIVE PRESSURE KSF
5	1'-8 1/2"	2'-7"	1'-5"	8'-6"	0.00	0.00	0.462	0.296	37.246	41.311	SHORT	7'-9 3/4"	1.54	8'-4 1/4"	1.05
6	1'-9"	2'-7"	1'-5"	8'-6"	0.00	0.00	0.462	0.360	40.951	44.885	SHORT	7'-10 5/8"	1.68	8'-4 5/8"	1.16
7	1'-9 1/2"	2'-7"	1'-5"	8'-6"	0.00	0.00	0.462	0.425	40.951	49.115	SHORT	8'-1/8"	1.80	8'-5 1/2"	1.25
8	1'-10"	2'-7"	1'-5"	8'-6"	0.00	0.00	0.462	0.492	40.951	52.656	SHORT	8'-2"	1.92	8'-5 1/8"	1.36
9	1'-10 1/2"	2'-7"	1'-5"	8'-6"	0.00	0.00	0.462	0.561	40.951	56.230	SHORT	7'-1 1/2"	2.06	8'-3 3/8"	1.50
10	1'-11"	2'-7"	1'-5"	8'-6"	0.00	0.00	0.462	0.631	40.951	63.967	SHORT	7'-3/8"	2.27	8'-1 1/4"	1.65
11	1'-11 1/2"	2'-7"	1'-5"	8'-6"	0.00	0.00	0.462	0.703	45.377	67.541	SHORT	6'-10 3/4"	2.49	7'-10 7/8"	1.81
12	2'-0"	2'-7"	1'-5"	8'-6"	0.00	0.00	0.462	0.776	45.377	71.377	SHORT	6'-8 3/4"	2.74	7'-8 1/8"	1.99
13	2'-1/2"	2'-7"	1'-5"	8'-6"	0.00	0.00	0.462	0.851	45.377	76.000	SHORT	6'-6 3/8"	3.03	7'-5"	2.19
14	2'-1"	2'-7"	1'-7"	8'-6"	0.00	0.00	0.515	0.928	45.377	84.000	SHORT	6'-3 1/8"	3.41	7'-1 1/8"	2.45
15	2'-1 1/2"	2'-7"	1'-7"	8'-6"	0.00	0.00	0.515	1.006	45.377	91.410	SHORT	6'-0"	3.78	6'-9 1/2"	2.71
16	2'-2"	2'-7"	1'-9"	8'-6"	0.00	0.00	0.567	1.085	40.951	102.820	SHORT	5'-7 7/8"	4.29	6'-5"	3.06
17	2'-2 1/2"	2'-9"	1'-9"	9'-0"	0.00	0.00	0.600	1.166	49.213	115.279	MEDIUM	6'-2 1/4"	4.36	6'-10 3/4"	3.14
18	2'-3"	3'-0"	1'-9"	9'-6"	0.00	0.00	0.633	1.249	50.754	122.754	MEDIUM	7'-1 3/8"	4.43	7'-4 3/4"	3.20
19	2'-3 1/2"	3'-2"	1'-9"	10'-0"	0.00	0.00	0.666	1.333	60.590	142.033	TALL	7'-6 7/8"	4.55	7'-10 3/8"	3.28

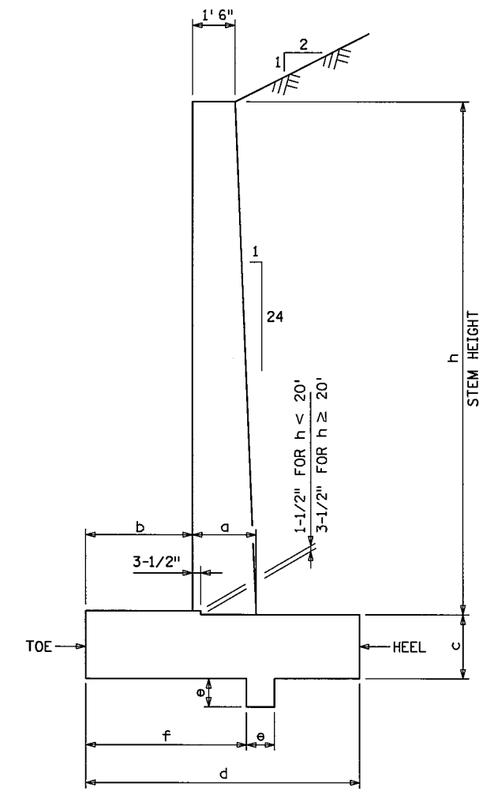

TYPICAL SECTION

NOTE:
EPOXY REINFORCEMENT QUANTITY ASSUMES AN EXPANSION JOINT IS USED ON BOTH PANEL ENDS. THE QUANTITY MUST BE ADJUSTED WHEN CONSTRUCTION JOINTS ARE USED.

(1) SEE STANDARD PLANS 5-297.621 TO .623 FOR REINFORCING DETAILS.

DESIGN CRITERIA
LOAD AND RESISTANCE FACTOR DESIGN (LRFD) BRIDGE DESIGN SPECIFICATIONS, 5TH ADDITION f'c = 4,000 PSI fy = 60,000 PSI SEE FOUNDATION REPORT FOR FACTORED BEARING RESISTANCE. BACKFILL CHARACTERISTICS: INTERNAL ANGLE OF FRICTION: 35°

RETAINING WALL SPREAD FOOTING GEOMETRY
AND DATA FOR RETAINING WALL 5

S.P. 179-020-031 S.P. 019-605-028

SHEET 5 OF 5

RETAINING WALL SPREAD FOOTING GEOMETRY AND DATA

DRAWN BY: RN | CHECKED BY: HS | CERTIFIED BY Khalid M Obeidat LICENSED PROFESSIONAL ENGINEER | LIC. NO. 41868 DATE 6/18/12

STATE PROJ. NO. 1901-148 (T.H. 13) SHEET NO. 320 OF 442 SHEETS

DISTRICT #: METRO
IPLOT NAME: d1901148_rw5_dtl1
FILENAME: Projects/DM_ROS/013/1901/148/Design/Walls/RW5/d1901148_rw5_dtl.dgn
PLOTTED/REVISED: 13-JUN-2012 09:02

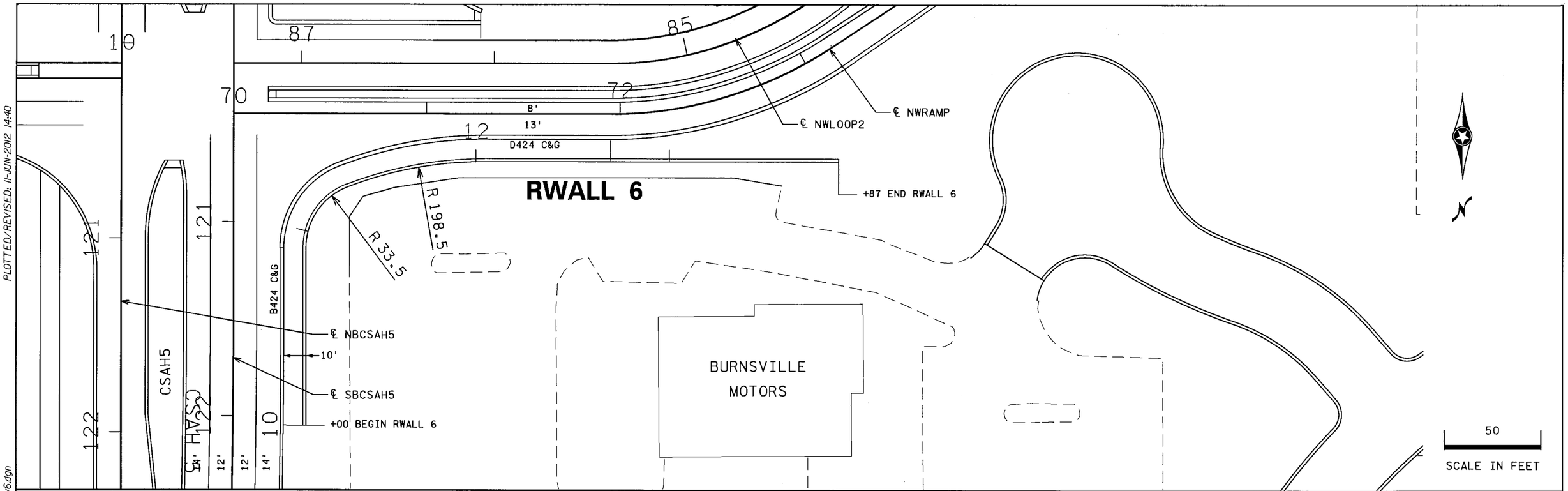

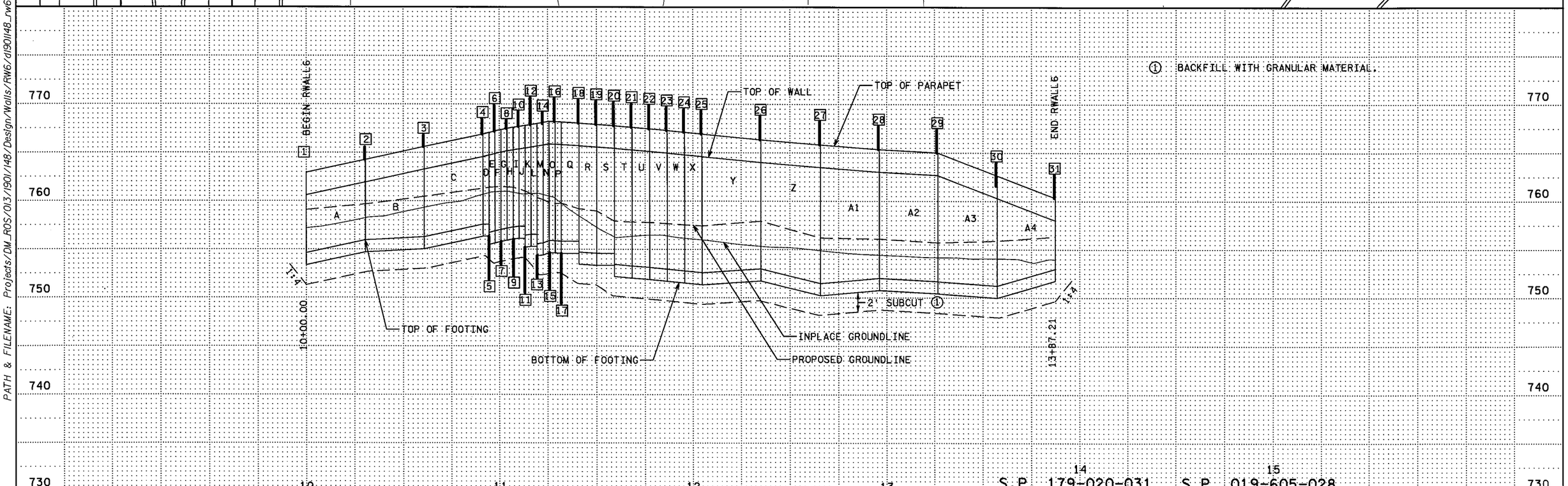

DISTRICT *: METRO
IPLOT NAME: d1901148_rw6
PATH & FILENAME: Projects/DM_ROS/013/1901/148/Design/Walls/RW6/d1901148_rw6.dgn

PLOTTED/REVISED: 11-JUN-2012 14:40

DRAWN BY: GJ	CHECKED BY: HS	CERTIFIED BY LICENSED PROFESSIONAL ENGINEER LIC. NO. 18520 DATE 6/18/12	RWALL6 PLAN AND PROFILE
			STATE PROJ. NO. 1901-148 (T.H. 13) SHEET NO. 321 OF 442 SHEETS

RETAINING WALL RETW6

LIVE LOAD SURCHARGE - SPECIAL DESIGN

JOINT NO.	STATION	X	Y	PROPOSED GROUND LINE	TOP OF WALL	TOP OF FOOTING HEEL	BOTTOM OF FOOTING	WALL HEIGHT	PANEL LENGTH	PANEL NAME
1	10+00.00	502994.850	210340.750	759.078	760.604	754.604	753.354	6.000	30.50	A
2	10+30.50	502994.850	210310.250	759.659	761.938	755.938	754.688	6.000	30.50	B
3	10+61.00	502994.850	210279.750	760.470	763.279	756.279	755.029	7.000	30.50	C
4	10+91.50	502994.850	210249.250	761.300	764.577	757.577	756.327	7.000	3.11	D
5	10+94.61	502994.700	210246.150	761.396	764.736	756.736	755.486	8.000	3.11	E
6	10+97.72	502994.270	210243.070	761.443	764.883	756.883	755.633	8.000	3.11	F
7	11+00.83	502993.550	210240.040	761.459	765.037	757.037	755.787	8.000	3.11	G
8	11+03.94	502992.560	210237.100	761.437	765.163	757.163	755.913	8.000	3.11	H
9	11+07.05	502991.300	210234.260	761.394	765.274	757.274	756.024	8.000	3.11	I
10	11+10.16	502989.780	210231.540	761.237	765.370	757.370	756.120	8.000	3.11	J
11	11+13.27	502988.020	210228.980	761.024	765.453	756.453	755.203	9.000	3.11	K
12	11+16.38	502986.020	210226.600	760.718	765.524	756.524	755.274	9.000	3.11	L
13	11+19.49	502983.820	210224.410	760.346	765.587	755.587	754.337	10.000	3.11	M
14	11+22.60	502981.420	210222.430	760.126	765.651	755.651	754.401	10.000	3.11	N
15	11+25.71	502978.840	210220.690	759.852	765.891	755.891	754.641	10.000	3.11	O
16	11+28.82	502976.120	210219.190	759.735	765.858	755.858	754.608	10.000	3.11	P
17	11+31.93	502973.270	210217.950	759.770	765.815	755.815	754.565	10.000	9.10	Q
18	11+41.03	502964.700	210214.900	759.184	765.698	754.698	753.448	11.000	9.10	R
19	11+50.13	502955.990	210212.250	758.970	765.570	754.570	753.320	11.000	9.10	S
20	11+59.23	502947.170	210210.000	757.907	765.431	753.431	752.181	12.000	9.10	T
21	11+68.33	502938.260	210208.160	757.830	765.281	753.281	752.031	12.000	9.10	U
22	11+77+43	502929.280	210206.730	757.774	765.122	753.122	751.872	12.000	9.10	V
23	11+86.53	502920.230	210205.710	757.671	764.950	752.950	751.700	12.000	9.10	W
24	11+95.63	502911.160	210205.110	757.555	764.766	752.766	751.516	12.000	9.10	X
25	12+04.73	502902.060	210204.930	757.425	764.580	752.580	751.330	12.000	30.50	Y
26	12+35.23	502871.560	210204.930	757.931	763.996	752.996	751.746	11.000	30.50	Z
27	12+65.73	502841.060	210204.930	756.202	763.479	751.479	750.229	12.000	30.50	A1
28	12+96.23	502810.560	210204.930	756.100	763.021	752.021	750.771	11.000	30.50	A2
29	13+26.73	502780.060	210204.930	755.718	762.671	751.671	750.421	11.000	30.50	A3
30	13+57.23	502749.560	210204.930	755.900	760.240	751.240	749.990	9.000	30.50	A4
31	13+87.73	502719.580	210204.930	756.336	758.001	753.001	751.751	5.000		

SUMMARY OF QUANTITIES FOR RETAINING WALL RETW6

(STANDARD MN/DOT CANTILEVER DESIGN)

PANEL	STRUCTURAL CONCRETE		REINFORCEMENT BARS			TYPE P-1(TL-2) RAILING CONCRETE (3Y46)②	ARCHITECTURAL CONCRETE TEXTURE (RANDOM BATTEN)	ARCHITECTURAL SURFACE FINISH (SINGLE COLOR)
	1A43 (FOOTING)	3Y43 (STEM)	PLAIN (WALL)	EPOXY (WALL)	EPOXY① (PARAPET)			
	CU YD	CU YD	LB	LB	LB	LIN FT	SQ FT	SQ FT
A	6.6	11.0	501	1399	341	30.50	58.0	361.0
B	7.4	12.1	601	1497	341	30.50	77.6	376.2
C	7.4	13.0	601	1507	341	30.50	92.8	391.5
D	0.8	1.5	86	991	35	3.11	10.3	40.2
E	0.8	1.5	86	991	35	3.11	10.6	43.0
F	0.8	1.5	86	991	35	3.11	10.9	43.0
G	0.8	1.5	86	991	35	3.11	11.4	43.0
H	0.8	1.5	86	991	35	3.11	11.8	43.0
I	0.8	1.5	86	991	35	3.11	12.5	43.0
J	0.9	1.7	101	1046	35	3.11	13.3	43.2
K	0.9	1.7	101	1046	35	3.11	14.4	46.2
L	1.0	2.0	103	1154	35	3.11	15.8	46.4
M	1.0	2.0	103	1154	35	3.11	17.1	49.6
N	1.0	2.0	103	1154	35	3.11	18.2	49.5
O	1.0	2.0	103	1154	35	3.11	18.9	49.3
P	1.0	2.0	103	1154	35	3.11	18.9	49.3
Q	3.2	6.1	305	1423	102	9.10	57.1	143.6
R	3.2	6.4	305	1423	102	9.10	59.7	153.2
S	3.7	6.8	342	1513	102	9.10	64.3	152.6
T	3.7	7.1	342	1513	102	9.10	68.1	162.3
U	3.7	7.1	342	1513	102	9.10	67.3	162.3
V	3.7	7.1	342	1513	102	9.10	66.5	162.3
W	3.7	7.1	342	1513	102	9.10	65.9	162.3
X	3.7	7.1	342	1513	102	9.10	65.4	162.3
Y	12.3	22.7	1079	2385	341	30.50	201.6	528.7
Z	12.3	22.7	1079	2385	341	30.50	203.5	528.7
A1	12.3	22.7	1079	2385	341	30.50	216.5	528.7
A2	10.8	21.5	954	2189	341	30.50	211.6	513.5
A3	10.8	19.5	954	2189	341	30.50	173.4	484.1
A4	9.1	13.3	736	1660	341	30.50	91.2	387.8
TOTALS	50.5	81.0	4572	25596	1988	177.4	729.0	2491.4

① CONSISTS OF PARAPET BARRIER DOWEL BAR IDENTIFIED AS THE Q BAR. FOR DETAILS, SEE SHEET NO. 336.

② FOR DETAILS, SEE SHEET NO. 342.

RWALL6 TABULATIONS

DRAWN BY: GJ | CHECKED BY: HS | CERTIFIED BY _____ LICENSED PROFESSIONAL ENGINEER | LIC. NO. 18520 DATE 6/18/12 | STATE PROJ. NO. 1901-148 (T.H. 13) SHEET NO. 322 OF 442 SHEETS

DISTRICT #: METRO
IPLOT NAME: d1901148_rw6
PATH & FILENAME: Projects/DM_ROS/013/1901/148/Design/Walls/RW6/d1901148_rw6.dgn
PLOTTED/REVISED: 11-JUN-2012 14:47

STEM HEIGHT:	AT HIGH END= 6'-0"	AT LOW END = 6'-0"
2-ft L.L. SURCHARGE	Panel: A	PANEL LENGTH = 30'-6"

Bar	Mark	No.	Length	A	Location	Weight
SPREAD FOOTING REINFORCEMENT						
A	F1601	8	32'-11"	STR.	LONG T & B	275
B	F1602	31	3'-6"	STR.	TRANS BOT	113
C	F1603	31	3'-6"	STR.	TRANS TOP	113
FOOTING DOWELS & STEM REINFORCEMENT						
D	F1604E	31	3'-0"	STR.	DOWEL FF	97
E	F1605E	16	4'-1"	0'-10"	DOWEL BF	68
F	F1606E	15	4'-3"	3'-3"	DOWEL BF	66
G	S1301E	31	5'-0"	STR.	VERT FF	104
H	S1602E	31	5'-0"	STR.	VERT BF	162
J	S 03E	-----	-----	STR.	VERT BF	-----
K	S1604E	31	7'-1"	3'-0"	TIE	229
L	S1305E	12	30'-0"	STR.	HORIZ EF	240
M	S1606E	12	7'-4"	1'-4"	EXP JT TIE	92
N	S1607E	-----	7'-9"	1'-9"	EXP JT TIE	-----
P	S1608E	-----	8'-2"	2'-2"	EXP JT TIE	-----
Q	S1609E	38	8'-7"	4'-0"	RAIL DOWEL	341
Q	-----	-----	-----	-----	F-RAILDOWEL	-----

Dimensions and quantities

DIMENSIONS			
SPREAD FOOTING			
b	1'-2"	e	-----
c	1'-5"	f	-----
d	4'-0"	g	1' 4- 5/16"
STEM			
a	1'-9"		
j	1' 4-3/8"		

QUANTITIES		
STRUCTURAL CONCRETE (1A43)		
(FOOTING)		
SPREAD	6.6	cu.yd.
PILE	0.0	cu.yd.
STRUCTURAL CONCRETE (3Y43)		
(STEM)		
	11.0	cu.yd.
REINFORCEMENT (PLAIN)		
SPREAD	501	lb
PILE	1255	lb
REINFORCEMENT (EPOXY)		
	1058	lb
	341	lb
	1399	lb

STEM HEIGHT:	AT HIGH END= 7'-0"	AT LOW END = 6'-0"
2-ft L.L. SURCHARGE	Panel: B	PANEL LENGTH = 30'-6"

Bar	Mark	No.	Length	A	Location	Weight
SPREAD FOOTING REINFORCEMENT						
A	F1601	10	32'-11"	STR.	LONG T & B	343
B	F1602	31	4'-0"	STR.	TRANS BOT	129
C	F1603	31	4'-0"	STR.	TRANS TOP	129
FOOTING DOWELS & STEM REINFORCEMENT						
D	F1604E	31	3'-0"	STR.	DOWEL FF	97
E	F1605E	16	4'-1"	0'-10"	DOWEL BF	68
F	F1606E	15	4'-3"	3'-3"	DOWEL BF	66
G	S1301E	31	5'-6"	STR.	VERT FF	114
H	S1602E	31	6'-0"	STR.	VERT BF	194
J	S 03E	-----	-----	STR.	VERT BF	-----
K	S1604E	31	7'-1"	3'-0"	TIE	229
L	S1305E	14	30'-0"	STR.	HORIZ EF	281
M	S1606E	14	7'-4"	1'-4"	EXP JT TIE	107
N	S1607E	-----	7'-9"	1'-9"	EXP JT TIE	-----
P	S1608E	-----	8'-2"	2'-2"	EXP JT TIE	-----
Q	S1609E	38	8'-7"	4'-0"	RAIL DOWEL	341
Q	-----	-----	-----	-----	F-RAILDOWEL	-----

Dimensions and quantities

DIMENSIONS			
SPREAD FOOTING			
b	1'-4"	e	-----
c	1'-5"	f	-----
d	4'-6"	g	1' 6- 5/16"
STEM			
a	1' 9-1/2"		
j	1' 4-7/8"		

QUANTITIES		
STRUCTURAL CONCRETE (1A43)		
(FOOTING)		
SPREAD	7.4	cu.yd.
STRUCTURAL CONCRETE (3Y43)		
(STEM)		
	12.1	cu.yd.
REINFORCEMENT (PLAIN)		
SPREAD	601	lb
REINFORCEMENT (EPOXY)		
Subtotal w/o Rail	1156	lb
Subtotal Rail Only	341	lb
TOTAL	1497	lb

STEM HEIGHT:	AT HIGH END= 7'-0"	AT LOW END = 7'-0"
2-ft L.L. SURCHARGE	Panel: C	PANEL LENGTH = 30'-6"

Bar	Mark	No.	Length	A	Location	Weight
SPREAD FOOTING REINFORCEMENT						
A	F1601	10	32'-11"	STR.	LONG T & B	343
B	F1602	31	4'-0"	STR.	TRANS BOT	129
C	F1603	31	4'-0"	STR.	TRANS TOP	129
FOOTING DOWELS & STEM REINFORCEMENT						
D	F1604E	31	3'-0"	STR.	DOWEL FF	97
E	F1605E	16	4'-1"	0'-10"	DOWEL BF	68
F	F1606E	15	4'-3"	3'-3"	DOWEL BF	66
G	S1301E	31	6'-0"	STR.	VERT FF	124
H	S1602E	31	6'-0"	STR.	VERT BF	194
J	S 03E	-----	-----	STR.	VERT BF	-----
K	S1604E	31	7'-1"	3'-0"	TIE	229
L	S1305E	14	30'-0"	STR.	HORIZ EF	281
M	S1606E	14	7'-4"	1'-4"	EXP JT TIE	107
N	S1607E	-----	7'-9"	1'-9"	EXP JT TIE	-----
P	S1608E	-----	8'-2"	2'-2"	EXP JT TIE	-----
Q	S1609E	38	8'-7"	4'-0"	RAIL DOWEL	341
Q	-----	-----	-----	-----	F-RAILDOWEL	-----

Dimensions and quantities

DIMENSIONS			
SPREAD FOOTING			
b	1'-4"	e	-----
c	1'-5"	f	-----
d	4'-6"	g	1' 6- 5/16"
STEM			
a	1' 9-1/2"		
j	1' 4-7/8"		

QUANTITIES		
STRUCTURAL CONCRETE (1A43)		
(FOOTING)		
SPREAD	7.4	cu.yd.
PILE	0.0	cu.yd.
STRUCTURAL CONCRETE (3Y43)		
(STEM)		
	13.0	cu.yd.
REINFORCEMENT (PLAIN)		
SPREAD	601	lb
PILE	0	lb
REINFORCEMENT (EPOXY)		
	1166	lb
	341	lb
	1507	lb

STEM HEIGHT:	AT HIGH END= 8'-0"	AT LOW END = 8'-0"
2-ft L.L. SURCHARGE	Panel: D	PANEL LENGTH = 3' 1- 5/16"

Bar	Mark	No.	Length	A	Location	Weight
SPREAD FOOTING REINFORCEMENT						
A	F1601	10	5'-6"	STR.	LONG T & B	58
B	F1602	3	4'-6"	STR.	TRANS BOT	14
C	F1603	3	4'-6"	STR.	TRANS TOP	14
FOOTING DOWELS & STEM REINFORCEMENT						
D	F1604E	3	3'-0"	STR.	DOWEL FF	9
E	F1605E	3	4'-1"	0'-10"	DOWEL BF	13
F	F1606E	2	4'-3"	3'-3"	DOWEL BF	9
G	S1301E	3	7'-0"	STR.	VERT FF	14
H	S1602E	3	7'-0"	STR.	VERT BF	226
J	S 03E	-----	-----	STR.	VERT BF	-----
K	S1604E	3	7'-1"	3'-0"	TIE	229
L	S1305E	16	2'-7"	STR.	HORIZ EF	28
M	S1606E	16	7'-4"	1'-4"	EXP JT TIE	122
N	S1607E	-----	7'-9"	1'-9"	EXP JT TIE	-----
P	S1608E	-----	8'-2"	2'-2"	EXP JT TIE	-----
Q	S1609E	38	8'-7"	4'-0"	RAIL DOWEL	341
Q	-----	-----	-----	-----	F-RAILDOWEL	-----

Dimensions and quantities

DIMENSIONS			
SPREAD FOOTING			
b	1'-6"	e	-----
c	1'-5"	f	-----
d	5'-0"	g	1' 8- 5/16"
STEM			
a	1'-10"		
j	1' 5-3/8"		

QUANTITIES		
STRUCTURAL CONCRETE (1A43)		
SPREAD	0.8	cu.yd.
STRUCTURAL CONCRETE (3Y43)		
(STEM)		
	1.5	cu.yd.
REINFORCEMENT (PLAIN)		
SPREAD	86	lb
REINFORCEMENT (EPOXY)		
Subtotal w/o Rail	650	lb
Subtotal Rail Only	341	lb
TOTAL	991	lb

DISTRICT #: METRO
IPLOT NAME: d190148_rw62
PATH & FILENAME: Projects/DM_ROS/013/1901/148/Design/Walls/RW6/d190148_rw6.dgn

PLOTTED/REVISED: 11-JUN-2012 14:40

S.P. 179-020-031 S.P. 019-605-028

SHEET 1 OF 8

RWALL6 PANEL TABULATIONS

DRAWN BY: GJ | CHECKED BY: HS | CERTIFIED BY _____ LICENSED PROFESSIONAL ENGINEER | LIC. NO. 18520 DATE 6/18/12

STATE PROJ. NO. 1901-148 (T.H. 13) SHEET NO. 323 OF 442 SHEETS

STEM HEIGHT:	AT HIGH END= 8'-0"	AT LOW END = 8'-0"
2-ft L.L. SURCHARGE	Panel: E	PANEL LENGTH = 3' 1- 5/16"

Bar	Mark	No.	Length	A	Location	Weight
SPREAD FOOTING REINFORCEMENT						
A	F1601	10	5'-6"	STR.	LONG T & B	58
B	F1602	3	4'-6"	STR.	TRANS BOT	14
C	F1603	3	4'-6"	STR.	TRANS TOP	14
FOOTING DOWELS & STEM REINFORCEMENT						
D	F1604E	3	3'-0"	STR.	DOWEL FF	9
E	F1605E	3	4'-1"	0'-10"	DOWEL BF	13
F	F1606E	2	4'-3"	3'-3"	DOWEL BF	9
G	S1301E	3	7'-0"	STR.	VERT FF	14
H	S1602E	3	7'-0"	STR.	VERT BF	226
J	S 03E	-----	-----	STR.	VERT BF	-----
K	S1604E	3	7'-1"	3'-0"	TIE	229
L	S1305E	16	2'-7"	STR.	HORIZ EF	28
M	S1606E	16	7'-4"	1'-4"	EXP JT TIE	122
N	S1607E	-----	7'-9"	1'-9"	EXP JT TIE	-----
P	S1608E	-----	8'-2"	2'-2"	EXP JT TIE	-----
Q	S1609E	38	8'-7"	4'-0"	RAIL DOWEL	341
Q	-----	-----	-----	-----	F-RAILDOWEL	-----

Dimensions and quantities

DIMENSIONS			
SPREAD FOOTING			
b	1'-6"	e	-----
c	1'-5"	f	-----
d	5'-0"	g	1' 8- 5/16"

STEM			
a	1'-10"		
j	1' 5-3/8"		

QUANTITIES	
STRUCTURAL CONCRETE (1A43)	
(FOOTING)	
SPREAD	0.8 cu.yd.
STRUCTURAL CONCRETE (3Y43)	
(STEM)	
	1.5 cu.yd.
REINFORCEMENT (PLAIN)	
SPREAD	86 lb
REINFORCEMENT (EPOXY)	
Subtotal w/o Rail	650 lb
Subtotal Rail Only	341 lb
TOTAL	991 lb

STEM HEIGHT:	AT HIGH END= 8'-0"	AT LOW END = 8'-0"
2-ft L.L. SURCHARGE	Panel: F	PANEL LENGTH = 3' 1- 5/16"

Bar	Mark	No.	Length	A	Location	Weight
SPREAD FOOTING REINFORCEMENT						
A	F1601	10	5'-6"	STR.	LONG T & B	58
B	F1602	3	4'-6"	STR.	TRANS BOT	14
C	F1603	3	4'-6"	STR.	TRANS TOP	14
FOOTING DOWELS & STEM REINFORCEMENT						
D	F1604E	3	3'-0"	STR.	DOWEL FF	9
E	F1605E	3	4'-1"	0'-10"	DOWEL BF	13
F	F1606E	2	4'-3"	3'-3"	DOWEL BF	9
G	S1301E	3	7'-0"	STR.	VERT FF	14
H	S1602E	3	7'-0"	STR.	VERT BF	226
J	S 03E	-----	-----	STR.	VERT BF	-----
K	S1604E	3	7'-1"	3'-0"	TIE	229
L	S1305E	16	2'-7"	STR.	HORIZ EF	28
M	S1606E	16	7'-4"	1'-4"	EXP JT TIE	122
N	S1607E	-----	7'-9"	1'-9"	EXP JT TIE	-----
P	S1608E	-----	8'-2"	2'-2"	EXP JT TIE	-----
Q	S1609E	38	8'-7"	4'-0"	RAIL DOWEL	341
Q	-----	-----	-----	-----	F-RAILDOWEL	-----

Dimensions and quantities

DIMENSIONS			
SPREAD FOOTING			
b	1'-6"	e	-----
c	1'-5"	f	-----
d	5'-0"	g	1' 8- 5/16"

STEM			
a	1'-10"		
j	1' 5-3/8"		

QUANTITIES	
STRUCTURAL CONCRETE (1A43)	
(FOOTING)	
SPREAD	0.8 cu.yd.
STRUCTURAL CONCRETE (3Y43)	
(STEM)	
	1.5 cu.yd.
REINFORCEMENT (PLAIN)	
SPREAD	86 lb
REINFORCEMENT (EPOXY)	
Subtotal w/o Rail	650 lb
Subtotal Rail Only	341 lb
TOTAL	991 lb

STEM HEIGHT:	AT HIGH END= 8'-0"	AT LOW END = 8'-0"
2-ft L.L. SURCHARGE	Panel: G	PANEL LENGTH = 3' 1- 5/16"

Bar	Mark	No.	Length	A	Location	Weight
SPREAD FOOTING REINFORCEMENT						
A	F1601	10	5'-6"	STR.	LONG T & B	58
B	F1602	3	4'-6"	STR.	TRANS BOT	14
C	F1603	3	4'-6"	STR.	TRANS TOP	14
FOOTING DOWELS & STEM REINFORCEMENT						
D	F1604E	3	3'-0"	STR.	DOWEL FF	9
E	F1605E	3	4'-1"	0'-10"	DOWEL BF	13
F	F1606E	2	4'-3"	3'-3"	DOWEL BF	9
G	S1301E	3	7'-0"	STR.	VERT FF	14
H	S1602E	3	7'-0"	STR.	VERT BF	226
J	S 03E	-----	-----	STR.	VERT BF	-----
K	S1604E	3	7'-1"	3'-0"	TIE	229
L	S1305E	16	2'-7"	STR.	HORIZ EF	28
M	S1606E	16	7'-4"	1'-4"	EXP JT TIE	122
N	S1607E	-----	7'-9"	1'-9"	EXP JT TIE	-----
P	S1608E	-----	8'-2"	2'-2"	EXP JT TIE	-----
Q	S1609E	38	8'-7"	4'-0"	RAIL DOWEL	341
Q	-----	-----	-----	-----	F-RAILDOWEL	-----

Dimensions and quantities

DIMENSIONS			
SPREAD FOOTING			
b	1'-6"	e	-----
c	1'-5"	f	-----
d	5'-0"	g	1' 8- 5/16"

STEM			
a	1'-10"		
j	1' 5-3/8"		

QUANTITIES	
STRUCTURAL CONCRETE (1A43)	
(FOOTING)	
SPREAD	0.8 cu.yd.
STRUCTURAL CONCRETE (3Y43)	
(STEM)	
	1.5 cu.yd.
REINFORCEMENT (PLAIN)	
SPREAD	86 lb
REINFORCEMENT (EPOXY)	
Subtotal w/o Rail	650 lb
Subtotal Rail Only	341 lb
TOTAL	991 lb

STEM HEIGHT:	AT HIGH END= 8'-0"	AT LOW END = 8'-0"
2-ft L.L. SURCHARGE	Panel: H	PANEL LENGTH = 3' 1- 5/16"

Bar	Mark	No.	Length	A	Location	Weight
SPREAD FOOTING REINFORCEMENT						
A	F1601	10	5'-6"	STR.	LONG T & B	58
B	F1602	3	4'-6"	STR.	TRANS BOT	14
C	F1603	3	4'-6"	STR.	TRANS TOP	14
FOOTING DOWELS & STEM REINFORCEMENT						
D	F1604E	3	3'-0"	STR.	DOWEL FF	9
E	F1605E	3	4'-1"	0'-10"	DOWEL BF	13
F	F1606E	2	4'-3"	3'-3"	DOWEL BF	9
G	S1301E	3	7'-0"	STR.	VERT FF	14
H	S1602E	3	7'-0"	STR.	VERT BF	226
J	S 03E	-----	-----	STR.	VERT BF	-----
K	S1604E	3	7'-1"	3'-0"	TIE	229
L	S1305E	16	2'-7"	STR.	HORIZ EF	28
M	S1606E	16	7'-4"	1'-4"	EXP JT TIE	122
N	S1607E	-----	7'-9"	1'-9"	EXP JT TIE	-----
P	S1608E	-----	8'-2"	2'-2"	EXP JT TIE	-----
Q	S1609E	38	8'-7"	4'-0"	RAIL DOWEL	341
Q	-----	-----	-----	-----	F-RAILDOWEL	-----

Dimensions and quantities

DIMENSIONS			
SPREAD FOOTING			
b	1'-6"	e	-----
c	1'-5"	f	-----
d	5'-0"	g	1' 8- 5/16"

STEM			
a	1'-10"		
j	1' 5-3/8"		

QUANTITIES	
STRUCTURAL CONCRETE (1A43)	
(FOOTING)	
SPREAD	0.8 cu.yd.
STRUCTURAL CONCRETE (3Y43)	
(STEM)	
	1.5 cu.yd.
REINFORCEMENT (PLAIN)	
SPREAD	86 lb
REINFORCEMENT (EPOXY)	
Subtotal w/o Rail	650 lb
Subtotal Rail Only	341 lb
TOTAL	991 lb

S.P. 179-020-031 S.P. 019-605-028

SHEET 2 OF 8

RWALL6 PANEL TABULATIONS

DRAWN BY: GJ | CHECKED BY: HS | CERTIFIED BY _____ LICENSED PROFESSIONAL ENGINEER LIC. NO. 18520 DATE 6/18/12

STATE PROJ. NO. 1901-148 (T.H. 13) SHEET NO. 324 OF 442 SHEETS

PLOTTED/REVISED: 11-JUN-2012 14:40
DISTRICT #: METRO
IPLOT NAME: d190l148_rw65
PATH & FILENAME: Projects/DM_ROS/013/190l/148/Design/Walls/RW6/d190l148_rw6.dgn

STEM HEIGHT:	AT HIGH END= 8'-0"	AT LOW END = 8'-0"
2-ft L.L. SURCHARGE	Panel: I	PANEL LENGTH = 3' 1- 5/16"

Bar	Mark	No.	Length	A	Location	Weight
SPREAD FOOTING REINFORCEMENT						
A	F1601	10	5'-6"	STR.	LONG T & B	58
B	F1602	3	4'-6"	STR.	TRANS BOT	14
C	F1603	3	4'-6"	STR.	TRANS TOP	14
FOOTING DOWELS & STEM REINFORCEMENT						
D	F1604E	3	3'-0"	STR.	DOWEL FF	9
E	F1605E	3	4'-1"	0'-10"	DOWEL BF	13
F	F1606E	2	4'-3"	3'-3"	DOWEL BF	9
G	S1301E	3	7'-0"	STR.	VERT FF	14
H	S1602E	3	7'-0"	STR.	VERT BF	226
J	S 03E	-----	-----	STR.	VERT BF	-----
K	S1604E	3	7'-1"	3'-0"	TIE	229
L	S1305E	16	2'-7"	STR.	HORIZ EF	28
M	S1606E	16	7'-4"	1'-4"	EXP JT TIE	122
N	S1607E	-----	7'-9"	1'-9"	EXP JT TIE	-----
P	S1608E	-----	8'-2"	2'-2"	EXP JT TIE	-----
Q	S1609E	38	8'-7"	4'-0"	RAIL DOWEL	341
Q	-----	-----	-----	-----	F-RAILDOWEL	-----

Dimensions and quantities			
DIMENSIONS			
SPREAD FOOTING			
b	1'-6"	e	-----
c	1'-5"	f	-----
d	5'-0"	g	1' 8- 5/16"
STEM			
a	1'-10"		
j	1' 5-3/8"		

QUANTITIES	
STRUCTURAL CONCRETE (1A43)	
(FOOTING)	
SPREAD	0.8 cu.yd.
STRUCTURAL CONCRETE (3Y43)	
(STEM)	
	1.5 cu.yd.
REINFORCEMENT (PLAIN)	
SPREAD	86 lb
REINFORCEMENT (EPOXY)	
Subtotal w/o Rail	650 lb
Subtotal Rail Only	341 lb
TOTAL	991 lb

STEM HEIGHT:	AT HIGH END= 9'-0"	AT LOW END = 9'-0"
2-ft L.L. SURCHARGE	Panel: J	PANEL LENGTH = 3' 1- 5/16"

Bar	Mark	No.	Length	A	Location	Weight
SPREAD FOOTING REINFORCEMENT						
A	F1601	12	5'-6"	STR.	LONG T & B	69
B	F1602	3	5'-0"	STR.	TRANS BOT	16
C	F1603	3	5'-0"	STR.	TRANS TOP	16
FOOTING DOWELS & STEM REINFORCEMENT						
D	F1604E	3	3'-0"	STR.	DOWEL FF	9
E	F1605E	3	4'-4"	0'-10"	DOWEL BF	14
F	F1606E	2	4'-6"	3'-6"	DOWEL BF	9
G	S1301E	3	8'-0"	STR.	VERT FF	16
H	S1602E	3	8'-0"	STR.	VERT BF	259
J	S 03E	-----	-----	STR.	VERT BF	-----
K	S1604E	3	7'-1"	3'-0"	TIE	229
L	S1305E	18	2'-7"	STR.	HORIZ EF	31
M	S1606E	18	7'-4"	1'-4"	EXP JT TIE	138
N	S1607E	-----	7'-9"	1'-9"	EXP JT TIE	-----
P	S1608E	-----	8'-2"	2'-2"	EXP JT TIE	-----
Q	S1609E	38	8'-7"	4'-0"	RAIL DOWEL	341
Q	-----	-----	-----	-----	F-RAILDOWEL	-----

Dimensions and quantities			
DIMENSIONS			
SPREAD FOOTING			
b	1'-8"	e	-----
c	1'-5"	f	-----
d	5'-6"	g	1' 10- 5/16"
STEM			
a	1' 10-1/2"		
j	1' 5-7/8"		

QUANTITIES	
STRUCTURAL CONCRETE (1A43)	
(FOOTING)	
SPREAD	0.9 cu.yd.
STRUCTURAL CONCRETE (3Y43)	
(STEM)	
	1.7 cu.yd.
REINFORCEMENT (PLAIN)	
SPREAD	101 lb
REINFORCEMENT (EPOXY)	
Subtotal w/o Rail	705 lb
Subtotal Rail Only	341 lb
TOTAL	1046 lb

STEM HEIGHT:	AT HIGH END= 9'-0"	AT LOW END = 9'-0"
2-ft L.L. SURCHARGE	Panel: K	PANEL LENGTH = 3' 1- 5/16"

Bar	Mark	No.	Length	A	Location	Weight
SPREAD FOOTING REINFORCEMENT						
A	F1601	12	5'-6"	STR.	LONG T & B	69
B	F1602	3	5'-0"	STR.	TRANS BOT	16
C	F1603	3	5'-0"	STR.	TRANS TOP	16
FOOTING DOWELS & STEM REINFORCEMENT						
D	F1604E	3	3'-0"	STR.	DOWEL FF	9
E	F1605E	3	4'-4"	0'-10"	DOWEL BF	14
F	F1606E	2	4'-6"	3'-6"	DOWEL BF	9
G	S1301E	3	8'-0"	STR.	VERT FF	16
H	S1602E	3	8'-0"	STR.	VERT BF	259
J	S 03E	-----	-----	STR.	VERT BF	-----
K	S1604E	3	7'-1"	3'-0"	TIE	229
L	S1305E	18	2'-7"	STR.	HORIZ EF	31
M	S1606E	18	7'-4"	1'-4"	EXP JT TIE	138
N	S1607E	-----	7'-9"	1'-9"	EXP JT TIE	-----
P	S1608E	-----	8'-2"	2'-2"	EXP JT TIE	-----
Q	S1609E	38	8'-7"	4'-0"	RAIL DOWEL	341
Q	-----	-----	-----	-----	F-RAILDOWEL	-----

Dimensions and quantities			
DIMENSIONS			
SPREAD FOOTING			
b	1'-8"	e	-----
c	1'-5"	f	-----
d	5'-6"	g	1' 10- 5/16"
STEM			
a	1' 10-1/2"		
j	1' 5-7/8"		

QUANTITIES	
STRUCTURAL CONCRETE (1A43)	
(FOOTING)	
SPREAD	0.9 cu.yd.
STRUCTURAL CONCRETE (3Y43)	
(STEM)	
	1.7 cu.yd.
REINFORCEMENT (PLAIN)	
SPREAD	101 lb
REINFORCEMENT (EPOXY)	
Subtotal w/o Rail	705 lb
Subtotal Rail Only	341 lb
TOTAL	1046 lb

STEM HEIGHT:	AT HIGH END= 10'-0"	AT LOW END = 10'-0"
2-ft L.L. SURCHARGE	Panel: L	PANEL LENGTH = 3' 1- 5/16"

Bar	Mark	No.	Length	A	Location	Weight
SPREAD FOOTING REINFORCEMENT						
A	F1601	12	5'-6"	STR.	LONG T & B	69
B	F1602	3	5'-6"	STR.	TRANS BOT	17
C	F1603	3	5'-6"	STR.	TRANS TOP	17
FOOTING DOWELS & STEM REINFORCEMENT						
D	F1604E	3	3'-0"	STR.	DOWEL FF	9
E	F1605E	3	4'-10"	0'-10"	DOWEL BF	15
F	F1606E	2	5'-0"	4'-0"	DOWEL BF	10
G	S1301E	3	7'-3"	STR.	VERT FF	15
H	S1602E	3	7'-3"	STR.	VERT BF	234
J	S 03E	-----	-----	STR.	VERT BF	-----
K	S1604E	3	10'-7"	4'-9"	TIE	342
L	S1305E	20	2'-7"	STR.	HORIZ EF	35
M	S1606E	20	7'-4"	1'-4"	EXP JT TIE	153
N	S1607E	-----	7'-9"	1'-9"	EXP JT TIE	-----
P	S1608E	-----	8'-2"	2'-2"	EXP JT TIE	-----
Q	S1609E	38	8'-7"	4'-0"	RAIL DOWEL	341
Q	-----	-----	-----	-----	F-RAILDOWEL	-----

Dimensions and quantities			
DIMENSIONS			
SPREAD FOOTING			
b	1'-9"	e	-----
c	1'-5"	f	-----
d	6'-0"	g	1' 11- 5/16"
STEM			
a	1'-11"		
j	1' 6-3/8"		

STRUCTURAL CONCRETE (1A43)	
SPREAD	1.0 cu.yd.
STRUCTURAL CONCRETE (3Y43)	
(STEM)	
	2.0 cu.yd.
REINFORCEMENT (PLAIN)	
SPREAD	103 lb
REINFORCEMENT (EPOXY)	
Subtotal w/o Rail	813 lb
Subtotal Rail Only	341 lb
TOTAL	1154 lb

PLOTTED/REVISED: 11-JUN-2012 14:40

DISTRICT #: METRO
IPLOT NAME: d1901148_rw63
PATH & FILENAME: Projects/DM_ROS/013/1901/148/Design/Walls/RW6/d1901148_rw6.dgn

S.P. 179-020-031 S.P. 019-605-028

SHEET 3 OF 8

RWALL6 PANEL TABULATIONS

DRAWN BY: GJ | CHECKED BY: HS | CERTIFIED BY _____ LICENSED PROFESSIONAL ENGINEER | LIC. NO. 18520 DATE 6/18/12

STATE PROJ. NO. 1901-148 (T.H. 13) SHEET NO. 325 OF 442 SHEETS

STEM HEIGHT:	AT HIGH END= 10'-0"	AT LOW END = 10'-0"
2-ft L.L. SURCHARGE	Panel: M	PANEL LENGTH = 3' 1- 5/16"

Bar	Mark	No.	Length	A	Location	Weight
SPREAD FOOTING REINFORCEMENT						
A	F1601	12	5'-6"	STR.	LONG T & B	69
B	F1602	3	5'-6"	STR.	TRANS BOT	17
C	F1603	3	5'-6"	STR.	TRANS TOP	17
FOOTING DOWELS & STEM REINFORCEMENT						
D	F1604E	3	3'-0"	STR.	DOWEL FF	9
E	F1605E	3	4'-10"	0'-10"	DOWEL BF	15
F	F1606E	2	5'-0"	4'-0"	DOWEL BF	10
G	S1301E	3	7'-3"	STR.	VERT FF	15
H	S1602E	3	7'-3"	STR.	VERT BF	234
J	S 03E	-----	-----	STR.	VERT BF	-----
K	S1604E	3	10'-7"	4'-9"	TIE	342
L	S1305E	20	2'-7"	STR.	HORIZ EF	35
M	S1606E	20	7'-4"	1'-4"	EXP JT TIE	153
N	S1607E	-----	7'-9"	1'-9"	EXP JT TIE	-----
P	S1608E	-----	8'-2"	2'-2"	EXP JT TIE	-----
Q	S1609E	38	8'-7"	4'-0"	RAIL DOWEL	341
Q	-----	-----	-----	-----	F-RAILDOWEL	-----

DIMENSIONS			
SPREAD FOOTING			
b	1'-9"	e	-----
c	1'-5"	f	-----
d	6'-0"	g	1' 11- 5/16"
STEM			
a	1'-11"		
j	1' 6-3/8"		

QUANTITIES	
STRUCTURAL CONCRETE (1A43) (FOOTING)	
SPREAD	1.0 cu.yd.
STRUCTURAL CONCRETE (3Y43) (STEM)	
	2.0 cu.yd.
REINFORCEMENT (PLAIN)	
SPREAD	103 lb
REINFORCEMENT (EPOXY)	
Subtotal w/o Rail	813 lb
Subtotal Rail Only	341 lb
TOTAL	1154 lb

STEM HEIGHT:	AT HIGH END= 10'-0"	AT LOW END = 10'-0"
2-ft L.L. SURCHARGE	Panel: N	PANEL LENGTH = 3' 1- 5/16"

Bar	Mark	No.	Length	A	Location	Weight
SPREAD FOOTING REINFORCEMENT						
A	F1601	12	5'-6"	STR.	LONG T & B	69
B	F1602	3	5'-6"	STR.	TRANS BOT	17
C	F1603	3	5'-6"	STR.	TRANS TOP	17
FOOTING DOWELS & STEM REINFORCEMENT						
D	F1604E	3	3'-0"	STR.	DOWEL FF	9
E	F1605E	3	4'-10"	0'-10"	DOWEL BF	15
F	F1606E	2	5'-0"	4'-0"	DOWEL BF	10
G	S1301E	3	7'-3"	STR.	VERT FF	15
H	S1602E	3	7'-3"	STR.	VERT BF	234
J	S 03E	-----	-----	STR.	VERT BF	-----
K	S1604E	3	10'-7"	4'-9"	TIE	342
L	S1305E	20	2'-7"	STR.	HORIZ EF	35
M	S1606E	20	7'-4"	1'-4"	EXP JT TIE	153
N	S1607E	-----	7'-9"	1'-9"	EXP JT TIE	-----
P	S1608E	-----	8'-2"	2'-2"	EXP JT TIE	-----
Q	S1609E	38	8'-7"	4'-0"	RAIL DOWEL	341
Q	-----	-----	-----	-----	F-RAILDOWEL	-----

DIMENSIONS			
SPREAD FOOTING			
b	1'-9"	e	-----
c	1'-5"	f	-----
d	6'-0"	g	1' 11- 5/16"
STEM			
a	1'-11"		
j	1' 6-3/8"		

QUANTITIES	
STRUCTURAL CONCRETE (1A43) (FOOTING)	
SPREAD	1.0 cu.yd.
STRUCTURAL CONCRETE (3Y43) (STEM)	
	2.0 cu.yd.
REINFORCEMENT (PLAIN)	
SPREAD	103 lb
REINFORCEMENT (EPOXY)	
Subtotal w/o Rail	813 lb
Subtotal Rail Only	341 lb
TOTAL	1154 lb

STEM HEIGHT:	AT HIGH END= 10'-0"	AT LOW END = 10'-0"
2-ft L.L. SURCHARGE	Panel: O	PANEL LENGTH = 3' 1- 5/16"

Bar	Mark	No.	Length	A	Location	Weight
SPREAD FOOTING REINFORCEMENT						
A	F1601	12	5'-6"	STR.	LONG T & B	69
B	F1602	3	5'-6"	STR.	TRANS BOT	17
C	F1603	3	5'-6"	STR.	TRANS TOP	17
FOOTING DOWELS & STEM REINFORCEMENT						
D	F1604E	3	3'-0"	STR.	DOWEL FF	9
E	F1605E	3	4'-10"	0'-10"	DOWEL BF	15
F	F1606E	2	5'-0"	4'-0"	DOWEL BF	10
G	S1301E	3	7'-3"	STR.	VERT FF	15
H	S1602E	3	7'-3"	STR.	VERT BF	234
J	S 03E	-----	-----	STR.	VERT BF	-----
K	S1604E	3	10'-7"	4'-9"	TIE	342
L	S1305E	20	2'-7"	STR.	HORIZ EF	35
M	S1606E	20	7'-4"	1'-4"	EXP JT TIE	153
N	S1607E	-----	7'-9"	1'-9"	EXP JT TIE	-----
P	S1608E	-----	8'-2"	2'-2"	EXP JT TIE	-----
Q	S1609E	38	8'-7"	4'-0"	RAIL DOWEL	341
Q	-----	-----	-----	-----	F-RAILDOWEL	-----

DIMENSIONS			
SPREAD FOOTING			
b	1'-9"	e	-----
c	1'-5"	f	-----
d	6'-0"	g	1' 11- 5/16"
STEM			
a	1'-11"		
j	1' 6-3/8"		

QUANTITIES	
STRUCTURAL CONCRETE (1A43) (FOOTING)	
SPREAD	1.0 cu.yd.
STRUCTURAL CONCRETE (3Y43) (STEM)	
	2.0 cu.yd.
REINFORCEMENT (PLAIN)	
SPREAD	103 lb
REINFORCEMENT (EPOXY)	
Subtotal w/o Rail	813 lb
Subtotal Rail Only	341 lb
TOTAL	1154 lb

STEM HEIGHT:	AT HIGH END= 10'-0"	AT LOW END = 10'-0"
2-ft L.L. SURCHARGE	Panel: P	PANEL LENGTH = 3' 1- 5/16"

Bar	Mark	No.	Length	A	Location	Weight
SPREAD FOOTING REINFORCEMENT						
A	F1601	12	5'-6"	STR.	LONG T & B	69
B	F1602	3	5'-6"	STR.	TRANS BOT	17
C	F1603	3	5'-6"	STR.	TRANS TOP	17
FOOTING DOWELS & STEM REINFORCEMENT						
D	F1604E	3	3'-0"	STR.	DOWEL FF	9
E	F1605E	3	4'-10"	0'-10"	DOWEL BF	15
F	F1606E	2	5'-0"	4'-0"	DOWEL BF	10
G	S1301E	3	7'-3"	STR.	VERT FF	15
H	S1602E	3	7'-3"	STR.	VERT BF	234
J	S 03E	-----	-----	STR.	VERT BF	-----
K	S1604E	3	10'-7"	4'-9"	TIE	342
L	S1305E	20	2'-7"	STR.	HORIZ EF	35
M	S1606E	20	7'-4"	1'-4"	EXP JT TIE	153
N	S1607E	-----	7'-9"	1'-9"	EXP JT TIE	-----
P	S1608E	-----	8'-2"	2'-2"	EXP JT TIE	-----
Q	S1609E	38	8'-7"	4'-0"	RAIL DOWEL	341
Q	-----	-----	-----	-----	F-RAILDOWEL	-----

DIMENSIONS			
SPREAD FOOTING			
b	1'-9"	e	-----
c	1'-5"	f	-----
d	6'-0"	g	1' 11- 5/16"
STEM			
a	1'-11"		
j	1' 6-3/8"		

QUANTITIES	
STRUCTURAL CONCRETE (1A43) (FOOTING)	
SPREAD	1.0 cu.yd.
STRUCTURAL CONCRETE (3Y43) (STEM)	
	2.0 cu.yd.
REINFORCEMENT (PLAIN)	
SPREAD	103 lb
REINFORCEMENT (EPOXY)	
Subtotal w/o Rail	813 lb
Subtotal Rail Only	341 lb
TOTAL	1154 lb

PLOTTED/REVISED: 11-JUN-2012 14:40
DISTRICT #: METRO
IPLOT NAME: d1901148_rw66
PATH & FILENAME: Projects/DM_ROS/013/1901/148/Design/Walls/RW6/d1901148_rw6.dgn

S.P. 179-020-031 S.P. 019-605-028

RWALL6 PANEL TABULATIONS

DRAWN BY: GJ | CHECKED BY: HS | CERTIFIED BY _____ LICENSED PROFESSIONAL ENGINEER | LIC. NO. 18520 DATE 6/18/12

STATE PROJ. NO. 1901-148 (T.H. 13) SHEET NO. 326 OF 442 SHEETS

STEM HEIGHT:	AT HIGH END= 11'-0"	AT LOW END = 10'-0"
2-ft L.L. SURCHARGE	Panel: Q	PANEL LENGTH = 9' 1- 3/16"

Bar	Mark	No.	Length	A	Location	Weight
SPREAD FOOTING REINFORCEMENT						
A	F1601	14	11'-6"	STR.	LONG T & B	168
B	F1902	9	6'-0"	STR.	TRANS BOT	81
C	F1603	9	6'-0"	STR.	TRANS TOP	56
FOOTING DOWELS & STEM REINFORCEMENT						
D	F1604E	9	3'-0"	STR.	DOWEL FF	28
E	F1605E	9	5'-7"	0'-10"	DOWEL BF	52
F	F1606E	8	5'-9"	4'-9"	DOWEL BF	48
G	S1301E	9	8'-3"	STR.	VERT FF	50
H	S1602E	9	8'-3"	STR.	VERT BF	267
J	S 03E	-----	-----	STR.	VERT BF	-----
K	S1604E	9	10'-7"	4'-9"	TIE	342
L	S1305E	22	8'-7"	STR.	HORIZ EF	126
M	S1606E	20	7'-4"	1'-4"	EXP JT TIE	153
N	S1607E	2	7'-9"	1'-9"	EXP JT TIE	16
P	S1608E	-----	8'-2"	2'-2"	EXP JT TIE	-----
Q	S1609E	38	8'-7"	4'-0"	RAIL DOWEL	341
Q	-----	-----	-----	-----	F-RAILDOWEL	-----

Dimensions and quantities			
DIMENSIONS			
SPREAD FOOTING			
b	2'-0"	e	-----
c	1'-5"	f	-----
d	6'-6"	g	2' 2- 5/16"
STEM			
a	1' 11-1/2"		
j	1' 6-7/8"		
QUANTITIES			
STRUCTURAL CONCRETE (1A43)			
(FOOTING)			
SPREAD	3.2	cu.yd.	
STRUCTURAL CONCRETE (3Y43)			
(STEM)			
	6.1	cu.yd.	
REINFORCEMENT (PLAIN)			
SPREAD	305	lb	
REINFORCEMENT (EPOXY)			
Subtotal w/o Rail	1082 lb		
Subtotal Rail Only	341 lb		
TOTAL	1423 lb		

STEM HEIGHT:	AT HIGH END= 11'-0"	AT LOW END = 11'-0"
2-ft L.L. SURCHARGE	Panel: R	PANEL LENGTH = 9' 1- 3/16"

Bar	Mark	No.	Length	A	Location	Weight
SPREAD FOOTING REINFORCEMENT						
A	F1601	14	11'-6"	STR.	LONG T & B	168
B	F1902	9	6'-0"	STR.	TRANS BOT	81
C	F1603	9	6'-0"	STR.	TRANS TOP	56
FOOTING DOWELS & STEM REINFORCEMENT						
D	F1604E	9	3'-0"	STR.	DOWEL FF	28
E	F1605E	9	5'-7"	0'-10"	DOWEL BF	52
F	F1606E	8	5'-9"	4'-9"	DOWEL BF	48
G	S1301E	9	8'-3"	STR.	VERT FF	50
H	S1602E	9	8'-3"	STR.	VERT BF	267
J	S 03E	-----	-----	STR.	VERT BF	-----
K	S1604E	9	10'-7"	4'-9"	TIE	342
L	S1305E	22	8'-7"	STR.	HORIZ EF	126
M	S1606E	20	7'-4"	1'-4"	EXP JT TIE	153
N	S1607E	2	7'-9"	1'-9"	EXP JT TIE	16
P	S1608E	-----	8'-2"	2'-2"	EXP JT TIE	-----
Q	S1609E	38	8'-7"	4'-0"	RAIL DOWEL	341
Q	-----	-----	-----	-----	F-RAILDOWEL	-----

Dimensions and quantities			
DIMENSIONS			
SPREAD FOOTING			
b	2'-0"	e	-----
c	1'-5"	f	-----
d	6'-6"	g	2' 2- 5/16"
STEM			
a	1' 11-1/2"		
j	1' 6-7/8"		
QUANTITIES			
STRUCTURAL CONCRETE (1A43)			
(FOOTING)			
SPREAD	3.2	cu.yd.	
STRUCTURAL CONCRETE (3Y43)			
(STEM)			
	6.4	cu.yd.	
REINFORCEMENT (PLAIN)			
SPREAD	305	lb	
REINFORCEMENT (EPOXY)			
Subtotal w/o Rail	1082 lb		
Subtotal Rail Only	341 lb		
TOTAL	1423 lb		

STEM HEIGHT:	AT HIGH END= 12'-0"	AT LOW END = 11'-0"
2-ft L.L. SURCHARGE	Panel: S	PANEL LENGTH = 9' 1- 3/16"

Bar	Mark	No.	Length	A	Location	Weight
SPREAD FOOTING REINFORCEMENT						
A	F1601	14	11'-6"	STR.	LONG T & B	168
B	F2202	9	6'-3"	STR.	TRANS BOT	115
C	F1603	9	6'-3"	STR.	TRANS TOP	59
FOOTING DOWELS & STEM REINFORCEMENT						
D	F1604E	9	3'-0"	STR.	DOWEL FF	28
E	F1605E	9	6'-10"	0'-10"	DOWEL BF	64
F	F1606E	8	7'-3"	6'-3"	DOWEL BF	60
G	S1301E	9	9'-3"	STR.	VERT FF	56
H	S1602E	9	9'-3"	STR.	VERT BF	299
J	S 03E	-----	-----	STR.	VERT BF	-----
K	S1604E	9	10'-7"	4'-9"	TIE	342
L	S1305E	24	8'-7"	STR.	HORIZ EF	138
M	S1606E	20	7'-4"	1'-4"	EXP JT TIE	153
N	S1607E	4	7'-9"	1'-9"	EXP JT TIE	32
P	S1608E	-----	8'-2"	2'-2"	EXP JT TIE	-----
Q	S1609E	38	8'-7"	4'-0"	RAIL DOWEL	341
Q	-----	-----	-----	-----	F-RAILDOWEL	-----

Dimensions and quantities			
DIMENSIONS			
SPREAD FOOTING			
b	2'-3"	e	1'-0"
c	1'-5"	f	3' 10-5/8"
d	6'-9"	g	2' 5- 5/16"
STEM			
a	2'-0"		
j	1' 7-3/8"		
QUANTITIES			
STRUCTURAL CONCRETE (1A43)			
(FOOTING)			
SPREAD	3.7	cu.yd.	
STRUCTURAL CONCRETE (3Y43)			
(STEM)			
	6.8	cu.yd.	
REINFORCEMENT (PLAIN)			
SPREAD	342	lb	
REINFORCEMENT (EPOXY)			
Subtotal w/o Rail	1172 lb		
Subtotal Rail Only	341 lb		
TOTAL	1513 lb		

STEM HEIGHT:	AT HIGH END= 12'-0"	AT LOW END = 12'-0"
2-ft L.L. SURCHARGE	Panel: T	PANEL LENGTH = 9' 1- 3/16"

Bar	Mark	No.	Length	A	Location	Weight
SPREAD FOOTING REINFORCEMENT						
A	F1601	14	11'-6"	STR.	LONG T & B	168
B	F2202	9	6'-3"	STR.	TRANS BOT	115
C	F1603	9	6'-3"	STR.	TRANS TOP	59
FOOTING DOWELS & STEM REINFORCEMENT						
D	F1604E	9	3'-0"	STR.	DOWEL FF	28
E	F1605E	9	6'-10"	0'-10"	DOWEL BF	64
F	F1606E	8	7'-3"	6'-3"	DOWEL BF	60
G	S1301E	9	9'-3"	STR.	VERT FF	56
H	S1602E	9	9'-3"	STR.	VERT BF	299
J	S 03E	-----	-----	STR.	VERT BF	-----
K	S1604E	9	10'-7"	4'-9"	TIE	342
L	S1305E	24	8'-7"	STR.	HORIZ EF	138
M	S1606E	20	7'-4"	1'-4"	EXP JT TIE	153
N	S1607E	4	7'-9"	1'-9"	EXP JT TIE	32
P	S1608E	-----	8'-2"	2'-2"	EXP JT TIE	-----
Q	S1609E	38	8'-7"	4'-0"	RAIL DOWEL	341
Q	-----	-----	-----	-----	F-RAILDOWEL	-----

Dimensions and quantities			
DIMENSIONS			
SPREAD FOOTING			
b	2'-3"	e	1'-0"
c	1'-5"	f	3' 10-5/8"
d	6'-9"	g	2' 5- 5/16"
STEM			
a	2'-0"		
j	1' 7-3/8"		
STRUCTURAL CONCRETE (1A43)			
SPREAD	3.7	cu.yd.	
STRUCTURAL CONCRETE (3Y43)			
(STEM)			
	7.1	cu.yd.	
REINFORCEMENT (PLAIN)			
SPREAD	342	lb	
REINFORCEMENT (EPOXY)			
Subtotal w/o Rail	1172 lb		
Subtotal Rail Only	341 lb		
TOTAL	1513 lb		

S.P. 179-020-031 S.P. 019-605-028

SHEET 5 OF 8

RWALL6 PANEL TABULATIONS

DRAWN BY: GJ | CHECKED BY: HS | CERTIFIED BY _____ LICENSED PROFESSIONAL ENGINEER | LIC. NO. 18520 DATE 6/18/12

STATE PROJ. NO. 1901-148 (T.H. 13) SHEET NO. 327 OF 474 SHEETS

PLOTTED/REVISED: 11-JUN-2012 14:41
DISTRICT #: METRO
IPLOT NAME: d1901148_rw68
PATH & FILENAME: Projects/DM_ROS/013/1901/148/Design/Walls/RW6/d1901148_rw6.dgn

STEM HEIGHT:	AT HIGH END= 12'-0"	AT LOW END = 12'-0"
2-ft L.L. SURCHARGE	Panel: U	PANEL LENGTH = 9' 1- 3/16"

Bar	Mark	No.	Length	A	Location	Weight
SPREAD FOOTING REINFORCEMENT						
A	F1601	14	11'-6"	STR.	LONG T & B	168
B	F2202	9	6'-3"	STR.	TRANS BOT	115
C	F1603	9	6'-3"	STR.	TRANS TOP	59
FOOTING DOWELS & STEM REINFORCEMENT						
D	F1604E	9	3'-0"	STR.	DOWEL FF	28
E	F1605E	9	6'-10"	0'-10"	DOWEL BF	64
F	F1606E	8	7'-3"	6'-3"	DOWEL BF	60
G	S1301E	9	9'-3"	STR.	VERT FF	56
H	S1602E	9	9'-3"	STR.	VERT BF	299
J	S 03E	-----	-----	STR.	VERT BF	-----
K	S1604E	9	10'-7"	4'-9"	TIE	342
L	S1305E	24	8'-7"	STR.	HORIZ EF	138
M	S1606E	20	7'-4"	1'-4"	EXP JT TIE	153
N	S1607E	4	7'-9"	1'-9"	EXP JT TIE	32
P	S1608E	-----	8'-2"	2'-2"	EXP JT TIE	-----
Q	S1609E	38	8'-7"	4'-0"	RAIL DOWEL	341
Q	-----	-----	-----	-----	F-RAILDOWEL	-----

Dimensions and quantities

DIMENSIONS			
SPREAD FOOTING			
b	2'-3"	e	1'-0"
c	1'-5"	f	3' 10-5/8"
d	6'-9"	g	2' 5- 5/16"

STEM			
a	2'-0"		
j	1' 7-3/8"		

QUANTITIES	
STRUCTURAL CONCRETE (1A43)	
(FOOTING)	
SPREAD	3.7 cu.yd.
STRUCTURAL CONCRETE (3Y43)	
(STEM)	
	7.1 cu.yd.
REINFORCEMENT (PLAIN)	
SPREAD	342 lb
REINFORCEMENT (EPOXY)	
Subtotal w/o Rail	1172 lb
Subtotal Rail Only	341 lb
TOTAL	1513 lb

STEM HEIGHT:	AT HIGH END= 12'-0"	AT LOW END = 12'-0"
2-ft L.L. SURCHARGE	Panel: V	PANEL LENGTH = 9' 1- 3/16"

Bar	Mark	No.	Length	A	Location	Weight
SPREAD FOOTING REINFORCEMENT						
A	F1601	14	11'-6"	STR.	LONG T & B	168
B	F2202	9	6'-3"	STR.	TRANS BOT	115
C	F1603	9	6'-3"	STR.	TRANS TOP	59
FOOTING DOWELS & STEM REINFORCEMENT						
D	F1604E	9	3'-0"	STR.	DOWEL FF	28
E	F1605E	9	6'-10"	0'-10"	DOWEL BF	64
F	F1606E	8	7'-3"	6'-3"	DOWEL BF	60
G	S1301E	9	9'-3"	STR.	VERT FF	56
H	S1602E	9	9'-3"	STR.	VERT BF	299
J	S 03E	-----	-----	STR.	VERT BF	-----
K	S1604E	9	10'-7"	4'-9"	TIE	342
L	S1305E	24	8'-7"	STR.	HORIZ EF	138
M	S1606E	20	7'-4"	1'-4"	EXP JT TIE	153
N	S1607E	4	7'-9"	1'-9"	EXP JT TIE	32
P	S1608E	-----	8'-2"	2'-2"	EXP JT TIE	-----
Q	S1609E	38	8'-7"	4'-0"	RAIL DOWEL	341
Q	-----	-----	-----	-----	F-RAILDOWEL	-----

Dimensions and quantities

DIMENSIONS			
SPREAD FOOTING			
b	2'-3"	e	1'-0"
c	1'-5"	f	3' 10-5/8"
d	6'-9"	g	2' 5- 5/16"

STEM			
a	2'-0"		
j	1' 7-3/8"		

QUANTITIES	
STRUCTURAL CONCRETE (1A43)	
(FOOTING)	
SPREAD	3.7 cu.yd.
STRUCTURAL CONCRETE (3Y43)	
(STEM)	
	7.1 cu.yd.
REINFORCEMENT (PLAIN)	
SPREAD	342 lb
REINFORCEMENT (EPOXY)	
Subtotal w/o Rail	1172 lb
Subtotal Rail Only	341 lb
TOTAL	1513 lb

STEM HEIGHT:	AT HIGH END= 12'-0"	AT LOW END = 12'-0"
2-ft L.L. SURCHARGE	Panel: W	PANEL LENGTH = 9' 1- 3/16"

Bar	Mark	No.	Length	A	Location	Weight
SPREAD FOOTING REINFORCEMENT						
A	F1601	14	11'-6"	STR.	LONG T & B	168
B	F2202	9	6'-3"	STR.	TRANS BOT	115
C	F1603	9	6'-3"	STR.	TRANS TOP	59
FOOTING DOWELS & STEM REINFORCEMENT						
D	F1604E	9	3'-0"	STR.	DOWEL FF	28
E	F1605E	9	6'-10"	0'-10"	DOWEL BF	64
F	F1606E	8	7'-3"	6'-3"	DOWEL BF	60
G	S1301E	9	9'-3"	STR.	VERT FF	56
H	S1602E	9	9'-3"	STR.	VERT BF	299
J	S 03E	-----	-----	STR.	VERT BF	-----
K	S1604E	9	10'-7"	4'-9"	TIE	342
L	S1305E	24	8'-7"	STR.	HORIZ EF	138
M	S1606E	20	7'-4"	1'-4"	EXP JT TIE	153
N	S1607E	4	7'-9"	1'-9"	EXP JT TIE	32
P	S1608E	-----	8'-2"	2'-2"	EXP JT TIE	-----
Q	S1609E	38	8'-7"	4'-0"	RAIL DOWEL	341
Q	-----	-----	-----	-----	F-RAILDOWEL	-----

Dimensions and quantities

DIMENSIONS			
SPREAD FOOTING			
b	2'-3"	e	1'-0"
c	1'-5"	f	3' 10-5/8"
d	6'-9"	g	2' 5- 5/16"

STEM			
a	2'-0"		
j	1' 7-3/8"		

QUANTITIES	
STRUCTURAL CONCRETE (1A43)	
(FOOTING)	
SPREAD	3.7 cu.yd.
STRUCTURAL CONCRETE (3Y43)	
(STEM)	
	7.1 cu.yd.
REINFORCEMENT (PLAIN)	
SPREAD	342 lb
REINFORCEMENT (EPOXY)	
Subtotal w/o Rail	1172 lb
Subtotal Rail Only	341 lb
TOTAL	1513 lb

STEM HEIGHT:	AT HIGH END= 12'-0"	AT LOW END = 12'-0"
2-ft L.L. SURCHARGE	Panel: X	PANEL LENGTH = 9' 1- 3/16"

Bar	Mark	No.	Length	A	Location	Weight
SPREAD FOOTING REINFORCEMENT						
A	F1601	14	11'-6"	STR.	LONG T & B	168
B	F2202	9	6'-3"	STR.	TRANS BOT	115
C	F1603	9	6'-3"	STR.	TRANS TOP	59
FOOTING DOWELS & STEM REINFORCEMENT						
D	F1604E	9	3'-0"	STR.	DOWEL FF	28
E	F1605E	9	6'-10"	0'-10"	DOWEL BF	64
F	F1606E	8	7'-3"	6'-3"	DOWEL BF	60
G	S1301E	9	9'-3"	STR.	VERT FF	56
H	S1602E	9	9'-3"	STR.	VERT BF	299
J	S 03E	-----	-----	STR.	VERT BF	-----
K	S1604E	9	10'-7"	4'-9"	TIE	342
L	S1305E	24	8'-7"	STR.	HORIZ EF	138
M	S1606E	20	7'-4"	1'-4"	EXP JT TIE	153
N	S1607E	4	7'-9"	1'-9"	EXP JT TIE	32
P	S1608E	-----	8'-2"	2'-2"	EXP JT TIE	-----
Q	S1609E	38	8'-7"	4'-0"	RAIL DOWEL	341
Q	-----	-----	-----	-----	F-RAILDOWEL	-----

Dimensions and quantities

DIMENSIONS			
SPREAD FOOTING			
b	2'-3"	e	1'-0"
c	1'-5"	f	3' 10-5/8"
d	6'-9"	g	2' 5- 5/16"

STEM			
a	2'-0"		
j	1' 7-3/8"		

QUANTITIES	
STRUCTURAL CONCRETE (1A43)	
(FOOTING)	
SPREAD	3.7 cu.yd.
STRUCTURAL CONCRETE (3Y43)	
(STEM)	
	7.1 cu.yd.
REINFORCEMENT (PLAIN)	
SPREAD	342 lb
REINFORCEMENT (EPOXY)	
Subtotal w/o Rail	1172 lb
Subtotal Rail Only	341 lb
TOTAL	1513 lb

S.P. 179-020-031 S.P. 019-605-028

SHEET 6 OF 8

RWALL6 PANEL TABULATIONS

DRAWN BY: GJ | CHECKED BY: HS | CERTIFIED BY _____ LICENSED PROFESSIONAL ENGINEER LIC. NO. 18520 DATE 6/18/12

STATE PROJ. NO. 1901-148 (T.H. 13) SHEET NO. 328 OF 442 SHEETS

PLOTTED/REVISED: 11-JUN-2012 14:41
DISTRICT #: METRO
IPLOT NAME: d1901148_rw69
PATH & FILENAME: Projects/DM_ROS/013/1901/148/Design/Walls/RW6/d1901148_rw6.dgn

STEM HEIGHT:	AT HIGH END= 12'-0"	AT LOW END = 11'-0"
2-ft L.L. SURCHARGE	Panel: Y	PANEL LENGTH = 30'-6"

Bar	Mark	No.	Length	A	Location	Weight
SPREAD FOOTING REINFORCEMENT						
A	F1601	14	32'-11"	STR.	LONG T & B	481
B	F2202	31	6'-3"	STR.	TRANS BOT	396
C	F1603	31	6'-3"	STR.	TRANS TOP	202
FOOTING DOWELS & STEM REINFORCEMENT						
D	F1604E	31	3'-0"	STR.	DOWEL FF	97
E	F1605E	31	6'-10"	0'-10"	DOWEL BF	221
F	F1606E	30	7'-3"	6'-3"	DOWEL BF	227
G	S1301E	31	9'-3"	STR.	VERT FF	192
H	S1602E	31	9'-3"	STR.	VERT BF	299
J	S 03E	-----	-----	STR.	VERT BF	-----
K	S1604E	31	10'-7"	4'-9"	TIE	342
L	S1305E	24	30'-0"	STR.	HORIZ EF	481
M	S1606E	20	7'-4"	1'-4"	EXP JT TIE	153
N	S1607E	4	7'-9"	1'-9"	EXP JT TIE	32
P	S1608E	-----	8'-2"	2'-2"	EXP JT TIE	-----
Q	S1609E	38	8'-7"	4'-0"	RAIL DOWEL	341
Q	-----	-----	-----	-----	F-RAILDOWEL	-----

Dimensions and quantities			
DIMENSIONS			
SPREAD FOOTING			
b	2'-3"	e	1'-0"
c	1'-5"	f	3' 10-5/8"
d	6'-9"	g	2' 5- 5/16"
STEM			
a	2'-0"		
j	1' 7-3/8"		

QUANTITIES		
STRUCTURAL CONCRETE (1A43)		
(FOOTING)		
SPREAD	12.3	cu.yd.
STRUCTURAL CONCRETE (3Y43)		
(STEM)		
	22.7	cu.yd.
REINFORCEMENT (PLAIN)		
SPREAD	1079	lb
REINFORCEMENT (EPOXY)		
Subtotal w/o Rail	2044	lb
Subtotal Rail Only	341	lb
TOTAL	2385	lb

STEM HEIGHT:	AT HIGH END= 12'-0"	AT LOW END = 11'-0"
2-ft L.L. SURCHARGE	Panel: Z	PANEL LENGTH = 30'-6"

Bar	Mark	No.	Length	A	Location	Weight
SPREAD FOOTING REINFORCEMENT						
A	F1601	14	32'-11"	STR.	LONG T & B	481
B	F2202	31	6'-3"	STR.	TRANS BOT	396
C	F1603	31	6'-3"	STR.	TRANS TOP	202
FOOTING DOWELS & STEM REINFORCEMENT						
D	F1604E	31	3'-0"	STR.	DOWEL FF	97
E	F1605E	31	6'-10"	0'-10"	DOWEL BF	221
F	F1606E	30	7'-3"	6'-3"	DOWEL BF	227
G	S1301E	31	9'-3"	STR.	VERT FF	192
H	S1602E	31	9'-3"	STR.	VERT BF	299
J	S 03E	-----	-----	STR.	VERT BF	-----
K	S1604E	31	10'-7"	4'-9"	TIE	342
L	S1305E	24	30'-0"	STR.	HORIZ EF	481
M	S1606E	20	7'-4"	1'-4"	EXP JT TIE	153
N	S1607E	4	7'-9"	1'-9"	EXP JT TIE	32
P	S1608E	-----	8'-2"	2'-2"	EXP JT TIE	-----
Q	S1609E	38	8'-7"	4'-0"	RAIL DOWEL	341
Q	-----	-----	-----	-----	F-RAILDOWEL	-----

Dimensions and quantities			
DIMENSIONS			
SPREAD FOOTING			
b	2'-3"	e	1'-0"
c	1'-5"	f	3' 10-5/8"
d	6'-9"	g	2' 5- 5/16"
STEM			
a	2'-0"		
j	1' 7-3/8"		

QUANTITIES		
STRUCTURAL CONCRETE (1A43)		
(FOOTING)		
SPREAD	12.3	cu.yd.
STRUCTURAL CONCRETE (3Y43)		
(STEM)		
	22.7	cu.yd.
REINFORCEMENT (PLAIN)		
SPREAD	1079	lb
REINFORCEMENT (EPOXY)		
Subtotal w/o Rail	2044	lb
Subtotal Rail Only	341	lb
TOTAL	2385	lb

STEM HEIGHT:	AT HIGH END= 12'-0"	AT LOW END = 11'-0"
2-ft L.L. SURCHARGE	Panel: A1	PANEL LENGTH = 30'-6"

Bar	Mark	No.	Length	A	Location	Weight
SPREAD FOOTING REINFORCEMENT						
A	F1601	14	32'-11"	STR.	LONG T & B	481
B	F2202	31	6'-3"	STR.	TRANS BOT	396
C	F1603	31	6'-3"	STR.	TRANS TOP	202
FOOTING DOWELS & STEM REINFORCEMENT						
D	F1604E	31	3'-0"	STR.	DOWEL FF	97
E	F1605E	31	6'-10"	0'-10"	DOWEL BF	221
F	F1606E	30	7'-3"	6'-3"	DOWEL BF	227
G	S1301E	31	9'-3"	STR.	VERT FF	192
H	S1602E	31	9'-3"	STR.	VERT BF	299
J	S 03E	-----	-----	STR.	VERT BF	-----
K	S1604E	31	10'-7"	4'-9"	TIE	342
L	S1305E	24	30'-0"	STR.	HORIZ EF	481
M	S1606E	20	7'-4"	1'-4"	EXP JT TIE	153
N	S1607E	4	7'-9"	1'-9"	EXP JT TIE	32
P	S1608E	-----	8'-2"	2'-2"	EXP JT TIE	-----
Q	S1609E	38	8'-7"	4'-0"	RAIL DOWEL	341
Q	-----	-----	-----	-----	F-RAILDOWEL	-----

Dimensions and quantities			
DIMENSIONS			
SPREAD FOOTING			
b	2'-3"	e	1'-0"
c	1'-5"	f	3' 10-5/8"
d	6'-9"	g	2' 5- 5/16"
STEM			
a	2'-0"		
j	1' 7-3/8"		

QUANTITIES		
STRUCTURAL CONCRETE (1A43)		
(FOOTING)		
SPREAD	12.3	cu.yd.
STRUCTURAL CONCRETE (3Y43)		
(STEM)		
	22.7	cu.yd.
REINFORCEMENT (PLAIN)		
SPREAD	1079	lb
REINFORCEMENT (EPOXY)		
Subtotal w/o Rail	2044	lb
Subtotal Rail Only	341	lb
TOTAL	2385	lb

STEM HEIGHT:	AT HIGH END= 11'-0"	AT LOW END = 11'-0"
2-ft L.L. SURCHARGE	Panel: A2	PANEL LENGTH = 30'-6"

Bar	Mark	No.	Length	A	Location	Weight
SPREAD FOOTING REINFORCEMENT						
A	F1601	14	32'-11"	STR.	LONG T & B	481
B	F1902	31	6'-0"	STR.	TRANS BOT	279
C	F1603	31	6'-0"	STR.	TRANS TOP	194
FOOTING DOWELS & STEM REINFORCEMENT						
D	F1604E	31	3'-0"	STR.	DOWEL FF	97
E	F1605E	31	5'-7"	0'-10"	DOWEL BF	181
F	F1606E	30	5'-9"	4'-9"	DOWEL BF	180
G	S1301E	31	8'-3"	STR.	VERT FF	171
H	S1602E	31	8'-3"	STR.	VERT BF	267
J	S 03E	-----	-----	STR.	VERT BF	-----
K	S1604E	31	10'-7"	4'-9"	TIE	342
L	S1305E	22	30'-0"	STR.	HORIZ EF	441
M	S1606E	20	7'-4"	1'-4"	EXP JT TIE	153
N	S1607E	2	7'-9"	1'-9"	EXP JT TIE	16
P	S1608E	-----	8'-2"	2'-2"	EXP JT TIE	-----
Q	S1609E	38	8'-7"	4'-0"	RAIL DOWEL	341
Q	-----	-----	-----	-----	F-RAILDOWEL	-----

Dimensions and quantities			
DIMENSIONS			
SPREAD FOOTING			
b	2'-0"	e	-----
c	1'-5"	f	-----
d	6'-6"	g	2' 2- 5/16"
STEM			
a	1' 11-1/2"		
j	1' 6-7/8"		

QUANTITIES		
STRUCTURAL CONCRETE (1A43)		
SPREAD	10.8	cu.yd.
STRUCTURAL CONCRETE (3Y43)		
(STEM)		
	21.5	cu.yd.
REINFORCEMENT (PLAIN)		
SPREAD	954	lb
REINFORCEMENT (EPOXY)		
Subtotal w/o Rail	1848	lb
Subtotal Rail Only	341	lb
TOTAL	2189	lb

S.P. 179-020-031 S.P. 019-605-028

SHEET 7 OF 8

RWALL6 PANEL TABULATIONS

DRAWN BY: GJ | CHECKED BY: HS | CERTIFIED BY _____ LICENSED PROFESSIONAL ENGINEER | LIC. NO. 18520 DATE 6/18/12

STATE PROJ. NO. 1901-148 (T.H. 13) SHEET NO. 329 OF 442 SHEETS

PLOTTED/REVISED: 11-JUN-2012 14:40
DISTRICT #: METRO
IPLOT NAME: d1901148_rw64
PATH & FILENAME: Projects/DM_ROS/013/1901/148/Design/Walls/RW6/d1901148_rw6.dgn

STEM HEIGHT:	AT HIGH END= 11'-0"	AT LOW END = 9'-0"
2-ft L.L. SURCHARGE	Panel: A3	PANEL LENGTH = 30'-6"

Bar	Mark	No.	Length	A	Location	Weight
SPREAD FOOTING REINFORCEMENT						
A	F1601	14	32'-11"	STR.	LONG T & B	481
B	F1902	31	6'-0"	STR.	TRANS BOT	279
C	F1603	31	6'-0"	STR.	TRANS TOP	194
FOOTING DOWELS & STEM REINFORCEMENT						
D	F1604E	31	3'-0"	STR.	DOWEL FF	97
E	F1605E	31	5'-7"	0'-10"	DOWEL BF	181
F	F1606E	30	5'-9"	4'-9"	DOWEL BF	180
G	S1301E	31	8'-3"	STR.	VERT FF	171
H	S1602E	31	8'-3"	STR.	VERT BF	267
J	S 03E	-----	-----	STR.	VERT BF	-----
K	S1604E	31	10'-7"	4'-9"	TIE	342
L	S1305E	22	30'-0"	STR.	HORIZ EF	441
M	S1606E	20	7'-4"	1'-4"	EXP JT TIE	153
N	S1607E	2	7'-9"	1'-9"	EXP JT TIE	16
P	S1608E	-----	8'-2"	2'-2"	EXP JT TIE	-----
Q	S1609E	38	8'-7"	4'-0"	RAIL DOWEL	341
Q	-----	-----	-----	-----	F-RAILDOWEL	-----

DIMENSIONS			
SPREAD FOOTING			
b	2'-0"	e	-----
c	1'-5"	f	-----
d	6'-6"	g	2' 2- 5/16"

STEM			
a	1' 11-1/2"		
j	1' 6-7/8"		

QUANTITIES		
STRUCTURAL CONCRETE (1A43)		
(FOOTING)		
SPREAD	10.8	cu.yd.
STRUCTURAL CONCRETE (3Y43)		
(STEM)		
	19.5	cu.yd.
REINFORCEMENT (PLAIN)		
SPREAD	954	lb
REINFORCEMENT (EPOXY)		
Subtotal w/o Rail	1848	lb
Subtotal Rail Only	341	lb
TOTAL	2189	lb

STEM HEIGHT:	AT HIGH END= 9'-0"	AT LOW END = 5'-0"
2-ft L.L. SURCHARGE	Panel: A4	PANEL LENGTH = 30'-6"

Bar	Mark	No.	Length	A	Location	Weight
SPREAD FOOTING REINFORCEMENT						
A	F1601	12	32'-11"	STR.	LONG T & B	412
B	F1602	31	5'-0"	STR.	TRANS BOT	162
C	F1603	31	5'-0"	STR.	TRANS TOP	162
FOOTING DOWELS & STEM REINFORCEMENT						
D	F1604E	31	3'-0"	STR.	DOWEL FF	97
E	F1605E	16	4'-4"	0'-10"	DOWEL BF	72
F	F1606E	15	4'-6"	3'-6"	DOWEL BF	70
G	S1301E	31	4'-6"	STR.	VERT FF	93
H	S1602E	31	8'-0"	STR.	VERT BF	259
J	S 03E	-----	-----	STR.	VERT BF	-----
K	S1604E	31	7'-1"	3'-0"	TIE	229
L	S1305E	18	30'-0"	STR.	HORIZ EF	361
M	S1606E	18	7'-4"	1'-4"	EXP JT TIE	138
N	S1607E	-----	7'-9"	1'-9"	EXP JT TIE	-----
P	S1608E	-----	8'-2"	2'-2"	EXP JT TIE	-----
Q	S1609E	38	8'-7"	4'-0"	RAIL DOWEL	341
Q	-----	-----	-----	-----	F-RAILDOWEL	-----

DIMENSIONS			
SPREAD FOOTING			
b	1'-8"	e	-----
c	1'-5"	f	-----
d	5'-6"	g	1' 10- 5/16"

STEM			
a	1' 10-1/2"		
j	1' 5-7/8"		

QUANTITIES		
STRUCTURAL CONCRETE (1A43)		
(FOOTING)		
SPREAD	9.1	cu.yd.
STRUCTURAL CONCRETE (3Y43)		
(STEM)		
	13.3	cu.yd.
REINFORCEMENT (PLAIN)		
SPREAD	736	lb
REINFORCEMENT (EPOXY)		
Subtotal w/o Rail	1319	lb
Subtotal Rail Only	341	lb
TOTAL	1660	lb

PLOTTED/REVISED: 12-JUN-2012 14:40
DISTRICT #: METRO
IPLOT NAME: d1901148_wall_quant
PATH & FILENAME: Projects/DM_ROS/013/1901/148/Design/Walls/d1901148_wall_quant.dgn

SUMMARY OF RETAINING WALL QUANTITIES

Z

WALL NAME	WALL TYPE	RETAINING WALL STATION TO STATION	STRUCTURAL CONCRETE		REINFORCEMENT BARS			TYPE P-1(TL-2) RAILING CONCRETE (3Y46) 2	ARCHITECTURAL CONCRETE TEXTURE (RANDOM BATTEN)	ARCHITECTURAL SURFACE FINISH (SINGLE COLOR)	4" PERF T.P. PIPE DRAIN	4" T.P. PIPE DRAIN ②	4" PRECAST CONCRETE HEADWALL	NOTES
			1A43 (FOOTING)	3Y43 (STEM)	PLAIN (WALL)	EPOXY (WALL)	EPOXY 3 (PARAPET)							
			CU YD	CU YD	POUND	POUND	POUND	LIN FT	SQ FT	SQ FT	LIN FT	LIN FT	EACH	
INTERCHANGE FUNDS														
RWALL1	①	10+00.00 TO 23+72.50	1189.8	1728.8	87019.0	226710.0	15345.0	1372.5	20614.9	32993.1	1276	30		④
RWALL2	①	10+00.00 TO 15+40.30	432.2	627.8	31434.0	80756.0	6138.0	540.3	6349.6	12179.5	552	10	2	
RWALL3		10+00.00 TO 17+00.00												③
RWALL4	①	10+00.00 TO 14+67.50	280.6	434.0	21367.0	55749.0	5227.0	467.5	4922.9	9300.8	471	10	2	
RWALL5	①	10+00.00 TO 24+33.50	815.4	1484.6	69324.0	153296.0	⑤	1433.5	16758.1	27605.8	1433	35		④
RWALL6	①	10+00.00 TO 13+87.73	50.5	81.0	4572.0	25596.0	1988.0	177.4	729.0	2491.4	387	10	2	
INTERCHANGE QUANTITY TOTALS:			2768.5	4356.2	213716.0	542107.0	28698.0	3991.2	49374.5	84570.6	4119.0	95	6	

① 2' -LIVE LOAD SURCHARGE

② PROVIDED TO DRAIN THE 4" PERF PIPE LOCATED ABOVE THE REMAINING WALL FOOTING. OUTLET DRAIN SHALL BE PLACED APPROXIMATELY EVERY 200 FT AT LOCATIONS DIRECTED BY THE ENGINEER. TIE TO PERF PIPE. END CAPS AND RODENT SCREEN SHALL BE INCIDENTAL. FOR DETAILS, SEE SHEET NO. 337.

③ FOR QUANTITIES, SEE SHEET NO. 288.

④ T.P. PIPE DRAINS TO CONCRETE WALK.

⑤ REBAR AND CONCRETE QUANTITIES ARE INCLUDED IN THE PAY ITEM BY LINEAR FOOT FOR THE PARAPET BARRIER.

NOTE:

A "CORK & DOWEL" JOINT IS ASSUMED AT EACH PANEL JOINT. AT THE CONTRACTOR'S OPTION, SOME OF THE JOINTS BETWEEN PANELS MAY BE "CONSTRUCTION" JOINTS. DOWEL JOINTS ARE REQUIRED AT A MAXIMUM OF EVERY 91'- 6" (TYPICALLY EVERY THIRD PANEL). IF "CONSTRUCTION" JOINTS ARE SUBSTITUTED FOR DOWEL JOINTS, THE "U" SHAPED M, N, & P BARS REQUIRED FOR "CORK & DOWEL" JOINTS ARE REPLACED WITH THE SAME NUMBER OF STRAIGHT NO. 16 BARS 6.0' (LONG) AT NO ADDITIONAL COST TO MN/DOT.

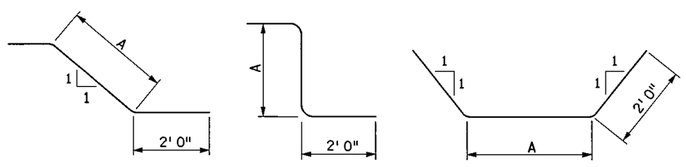

BAR U BAR V BAR Y

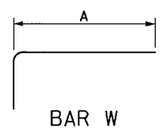

BAR W

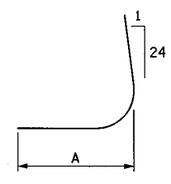

BAR E

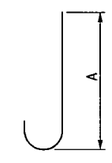

BAR F

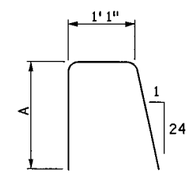

BAR K

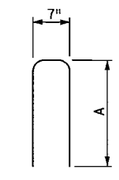

BAR Q
(CONC. PARAPET RAIL)

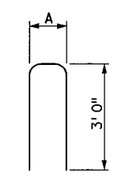

BARS M,N,P

S.P. 179-020-031 S.P. 019-605-028

RETAINING WALL SUMMARY OF QUANTITIES

DRAWN BY: GJ	CHECKED BY: HS	CERTIFIED BY LICENSED PROFESSIONAL ENGINEER LIC. NO. 18520 DATE 6/18/12	STATE PROJ. NO. 1901-148 (T.H. 13) SHEET NO. 331 OF 442 SHEETS

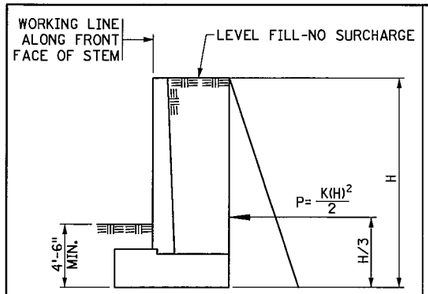

LEVEL FILL

	K
ACTIVE	33

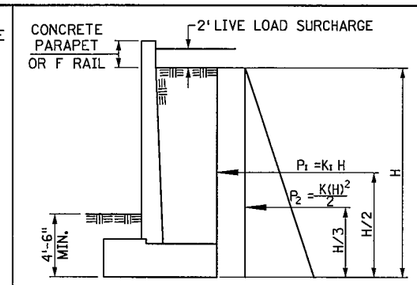

2' - LL SURCHARGE

	K	K_1
ACTIVE	33	66

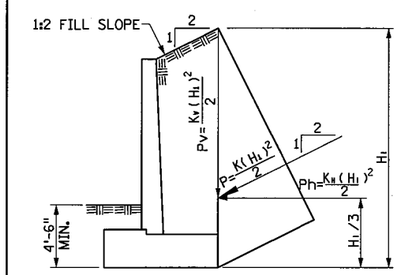

1:2 SLOPED FILL

	K	K_H	K_V
ACTIVE	49	44	22

LOADING CASES

DESIGN CRITERIA

1992 AASHTO DESIGN SPECIFICATIONS
WORKING STRESS-STABILITY, FOUNDATIONS
LOAD FACTOR DESIGN-REINFORCED CONCRETE
f'c=4000 PSI
fy =60000 PSI n=8

SEE FOUNDATION REPORT FOR RECOMMENDED FOUNDATION TYPE.
ALLOWABLE BENDING (LATERAL LOAD) PER PILE:
60 TON CIP PILE: 13 KIPS
55 TON HP PILE 12 KIPS
50 TON CIP PILE: 11 KIPS
30 TON TIMBER PILE: 7.5 KIPS

BACKFILL CHARACTERISTICS:
INTERNAL ANGLE OF FRICTION: 35°
EQUIVALENT FLUID PRESSURE (K), IN PCF, IS SHOWN IN LOADING CASE TABLES.
UNIT WEIGHT 125 PCF
COEFFICIENT OF FRICTION 0.55
βe = 1.0

BAR LAP (CLASS C)

BAR SIZE	PLAIN (4)	EPOXY (4)
16	2'-5"	2'-11"
19	2'-11"	3'-10"
22	3'-8"	4'-11"
25	4'-10"	6'-5"
29	6'-1"	8'-1"

BAR LAP (CLASS A)

BAR SIZE		EPOXY (4)
16		1'-11"
19		2'-3"
22		2'-11"
25		3'-9"
29		4'-9"

SUMMARY OF QUANTITIES FOR RETAINING WALLS

PANEL	STRUCTURAL CONCRETE		REINFORCEMENT BARS		STRUCTURE EXCAVATION		SELECT GRANULAR (MOD) (CV)(1)	AGGREGATE BACKFILL (CV)(2)(8)	ARCHI-TECTURAL CONCRETE TEXTURE					
	FOOTING 1A43 (9)	STEM 3Y43	PLAIN (9)	EPOXY (6)(7)	CLASS__	CLASS__								
	CU YD	CU YD	POUND	POUND	CU YD	CU YD	CU YD	CU YD	SQ FT					

NOTES:

(1) MODIFIED TO LESS THAN 10% PASSING A NO. 200 SIEVE. SPEC. 3149.2B.

(2) COMPACT TO 100% DENSITY IN ACCORDANCE WITH SPEC. 2105.3F1 UNLESS RECOMMENDED OTHERWISE BY THE SOILS ENGINEER.

(3) LIMITING CRITERIA.

(4) LAPS ARE GIVEN FOR THE TOP BAR CONDITION.

(5) CURVED FORMS MAY BE USED FOR ANY WALL WITH A RADIUS, BUT MUST BE USED ON WALLS WITH RADIUS LESS THAN 23 FEET.

(6) DOWELED JOINTS/CONSTRUCTION JOINTS ARE SHOWN ON STANDARD PLAN 5-297.624 (3 OF 3). THESE JOINTS ARE INCIDENTAL FOR WHICH NO DIRECT PAYMENT WILL BE MADE.

(7) DOWELED JOINT/CONSTRUCTION JOINT QUANTITIES ARE NOT INCLUDED.

(8) QUANTITIES FOR THE FOUNDATION WITH AGGREGATE BACKFILL OPTION ONLY.

(9) DOES NOT INCLUDE REINFORCING BARS AND STRUCTURAL CONCRETE (1A43) REQUIRED FOR STEPPED FOOTINGS. CONCRETE FOR STEPPED FOOTINGS SHALL BE PROVIDED INCIDENTAL TO "STRUCTURAL CONCRETE (1A43)" AND REINFORCING BARS SHALL BE PROVIDED INCIDENTAL TO "REINFORCEMENT BARS PLAIN".

CURVED RETAINING WALLS ALLOWABLE CHORD LENGTH (5)

MAXIMUM DEGREE OF CURVE	RADIUS	ALLOWABLE CHORD LENGTH	DEVIATION FROM TRUE RADIUS	MAXIMUM DEFLECTION ANGLE Δ
4°-00'	1432'	30'-6"	± 1/2" (3)	1°-15'
8°-00'	716'	21'-10"	± 1/2" (3)	1°-45'
16°-30'	347'	15'-3"	± 1/2" (3)	2°-30'
23°-00'	249'	12'-11"	± 1/2" (3)	2°-57'
65°-30'	87'	7'-7 1/2"	± 1/2"	5°-00' (3)
114°-30'	50'	4'-4 5/16"	± 1/4"	5°-00' (3)
250°-00'	23'	2'-0"	± 1/8"	5°-00' (3)

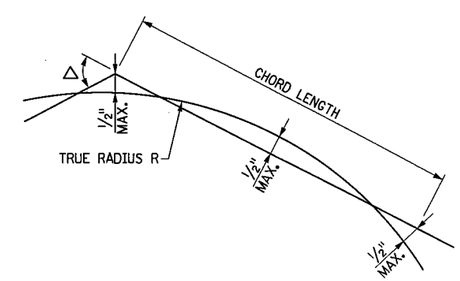

SHEET INDEX

NO.	TITLE
	GENERAL NOTES & SUMMARY OF QUANTITIES
	GENERAL LAYOUT
	GENERAL PLAN & ELEVATION
	WALL REINFORCEMENT
	PANEL TABULATIONS
	MISCELLANEOUS DETAILS

GENERAL NOTES:

UTILITIES:
EXISTING AND PROPOSED UTILITIES ARE SHOWN IN THE GRADING PLANS. THE CONTRACTOR SHALL VERIFY THE LOCATION OF EXISTING FACILITIES AND SHALL EXERCISE CARE IN ADJACENT CONSTRUCTION.

EXCAVATION AND EARTHWORK:
ALL EXCAVATION AND EMBANKMENT WORK SHALL CONFORM TO SPEC. 2451.

CONCRETE:
ALL CONCRETE SHALL CONFORM TO SPEC. 2461.

TRANSVERSE CONSTRUCTION JOINTS IN FOOTING ARE PERMISSIBLE. KEYWAYS AND CONTINUOUS REINFORCEMENT ARE REQUIRED THROUGH THESE JOINTS.

THE THICKNESS OF THE ARCHITECTURAL CONCRETE TEXTURE VARIES WITH THE TEXTURE RELIEF. THE STRUCTURAL CONCRETE 3Y43 QUANTITIES DO NOT INCLUDE THE MATERIAL WITHIN THE ARCHITECTURAL CONCRETE TEXTURE. CONCRETE NEEDED FOR THE TEXTURING IS INCIDENTAL FOR WHICH NO DIRECT PAYMENT WILL BE MADE. SEE SPECIAL PROVISIONS 2411.

FOR RETAINING WALLS THAT ABUT A BRIDGE OR BRIDGE WING WALL, NOTE THAT THE DESIGNATION OF "FRONT FACE" MAY VARY FROM THE BRIDGE PLANS TO THE RETAINING WALL PLANS.

POURING SEQUENCE:
THE POURING SEQUENCE SHALL BE AT THE CONTRACTOR'S OPTION BUT MUST BE SUBMITTED (WITH ADEQUATE APPROVAL TIME) TO THE ENGINEER FOR APPROVAL PRIOR TO BEGINNING THE FIRST POUR.

CONSTRUCTION:
CONSTRUCTION SHALL BE IN ACCORDANCE WITH SPEC. 2411, EXCEPT AS NOTED.

REINFORCING STEEL:
REINFORCEMENT BARS SHALL BE DEFORMED BILLET STEEL BARS CONFORMING TO SPEC. 3301, GRADE 60 AND EPOXY COATED EXCEPT AS NOTED.

THE CLEAR DISTANCE BETWEEN REINFORCEMENT BARS AND FACE OF CONCRETE SHALL BE 3 INCHES IN FOOTINGS, 5 INCHES IN BOTTOM OF SPREAD FOOTINGS, 2 INCHES ON ARCHITECTURAL CONCRETE TEXTURE, AND 2 INCHES ELSEWHERE UNLESS OTHERWISE NOTED.

THE FIRST TWO DIGITS OF EACH BAR MARK INDICATE THE BAR NUMBER WHICH APPROXIMATES THE NOMINAL DIAMETER OF THE BAR IN MILLIMETERS (mm).

ALL BENT BAR DIMENSIONS ARE GIVEN OUT-TO-OUT.

BARS MARKED WITH THE SUFFIX "E" SHALL BE EPOXY COATED. ALL BARS WHICH COME OUT OF THE FOOTING AND ALL BARS WHICH ARE ABOVE THE FOOTING SHALL BE EPOXY COATED.

THE CONTRACTOR HAS THE OPTION OF SUBSTITUTING 60'-0" LONG BARS FOR THE LONGITUDINAL FOOTING STEEL SHOWN. CHANGES IN THE BILL OF REINFORCEMENT SHALL BE THE RESPONSIBILITY OF THE CONTRACTOR. PAYMENT WILL BE BASED ON QUANTITIES SHOWN.

THE CONSTRUCTION JOINT FOR CONCRETE RAIL MAY BE LOCATED AT TOP OR BOTTOM OF COPE, AT THE CONTRACTOR'S OPTION. PAYMENT WILL BE BASED ON QUANTITIES SHOWN, WHICH IS BASED ON CONSTRUCTION JOINT ABOVE COPE.

FOR VARIABLE STEM HEIGHTS, VARY THE LAP LENGTH OF THE VERTICAL REINFORCEMENT. MINIMUM LAP LENGTHS ARE GIVEN IN THE TABLE ON THIS SHEET. SMALLER BAR GOVERNS LAP LENGTH.

DOWEL BAR ASSEMBLIES:
DOWELED JOINTS/CONSTRUCTION JOINTS ARE SHOWN ON STANDARD PLAN 5-297.624 (3 OF 3). THESE JOINTS ARE INCIDENTAL FOR WHICH NO DIRECT PAYMENT WILL BE MADE.

CONSTRUCTION JOINTS MAY BE SUBSTITUTED FOR SOME OF THE CORK & DOWEL JOINTS AT THE CONTRACTOR'S OPTION. CORK & DOWEL JOINTS MUST BE SPACED AT 91'-6" MAXIMUM.

CORK & DOWEL JOINTS MUST BE USED IN VERTICAL JOINTS AT FOOTING STEP LOCATIONS.

GEOMETRICS AND GRADES:
DATA FOR BASELINE GEOMETRY IS TABULATED FOR WALL ALIGNMENT, SEE LAYOUT SHEETS. WALL ALIGNMENT REFERENCE IS ALONG FRONT FACE OF WALL.

ON UP TO 10% SLOPES, THE CONTRACTOR HAS THE OPTION OF POURING FOOTINGS SLOPED OR STEPPED. ADDITIONAL CONCRETE VOLUMES AND CHANGES TO THE BILL OF REINFORCEMENT WHICH MAY RESULT FROM CONTRACTOR REQUESTED OPTIONS SHALL BE THE RESPONSIBILITY OF THE CONTRACTOR. NO ADDITIONAL PAYMENT WILL BE MADE.

QUANTITIES ARE BASED ON ASSUMED TOP OF ROCK ELEVATION. ACTUAL TOP OF ROCK TO BE DETERMINED BY ENGINEER.

PILE LOADS:
THE NOMINAL PILE BEARING RESISTANCES SHOWN FOR RETAINING WALLS WERE CALCULATED USING THE ALLOWABLE STRESS DESIGN (ASD) METHOD, NOT THE LRFD METHOD. IF DYNAMIC FORMULAS ARE USED TO DETERMINE PILE RESISTANCE FOR CONCRETE RETAINING WALLS IN THE FIELD, FOLLOW Mn/DOT SPECIFICATION 2452.3E AS DETAILED IN THE 2005 STANDARD SPECIFICATIONS FOR CONSTRUCTION. DO NOT USE LRFD PILE DRIVING FORMULAS TO COMPUTE PILE CAPACITIES FOR CONCRETE RETAINING WALLS SHOWN ON THE STANDARD PLAN SERIES 5-297.620 THRU 5-297.636.

REVISED: 6/14/2010

APPROVED: MAY 31, 2006
STATE BRIDGE ENGINEER

S.P. 179-020-031 S.P. 019-605-028

STANDARD SHEET NO. 5-297.620	TITLE: RETAINING WALL GENERAL NOTES AND SUMMARY OF QUANTITIES
STANDARD APPROVED: JUNE 14, 2010	

STATE PROJ. NO. 1901-148 (TH 13) SHEET NO. 332 OF 442 SHEETS

PLOTTED/REVISED: 11-JUN-2012 15:02
DISTRICT #: METRO
USER NAME: s620_l_spn
PATH & FILENAME: Projects/DM_ROS/013/1901/148/Design/StandardPlans/s620_l_spn.dgn
FILE NAME: s620_l_spn

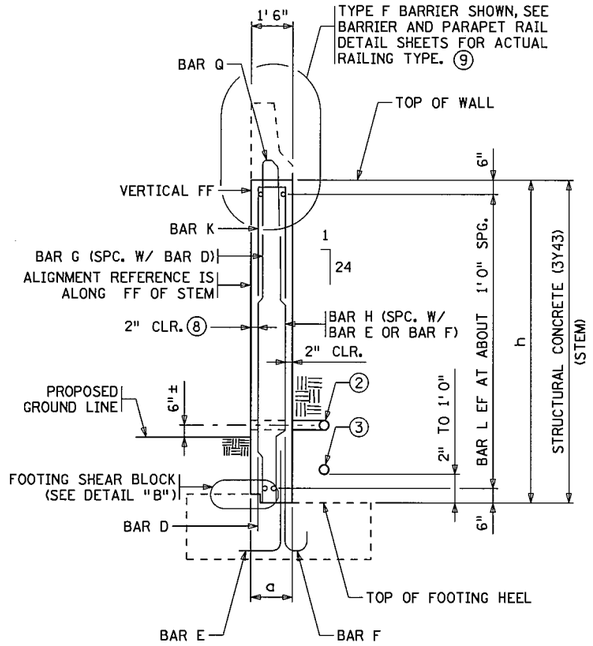

WALL SECTION

BARRIER OPTION SHOWN

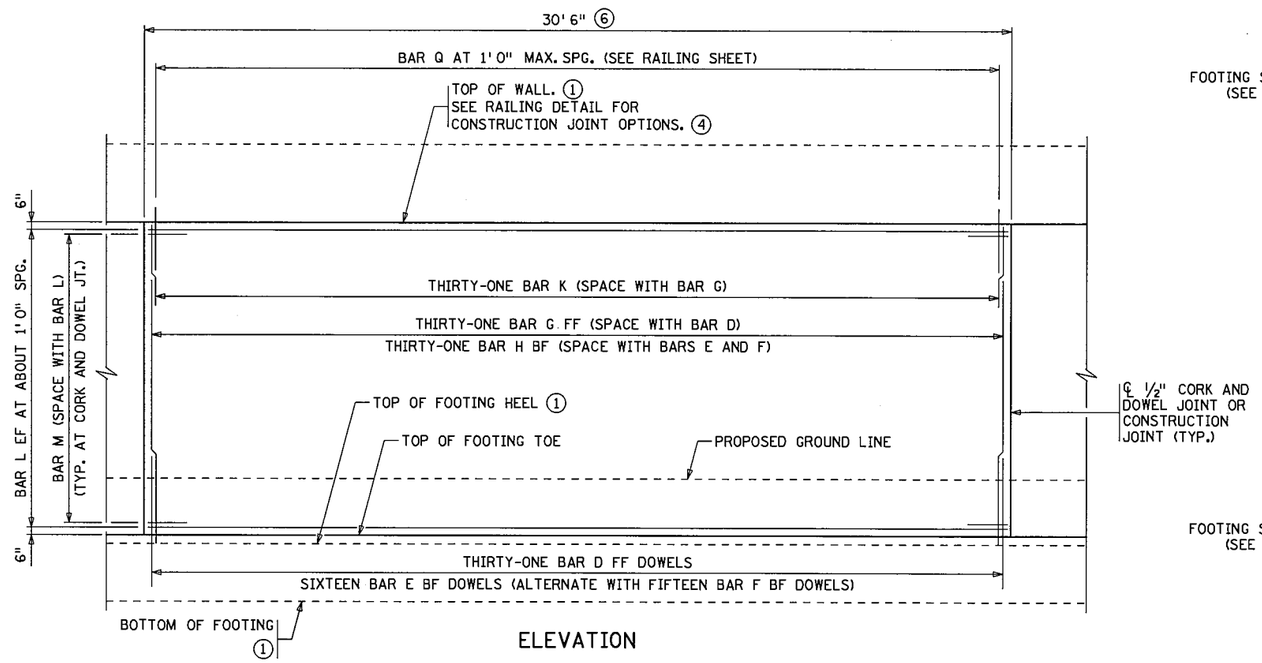

ELEVATION

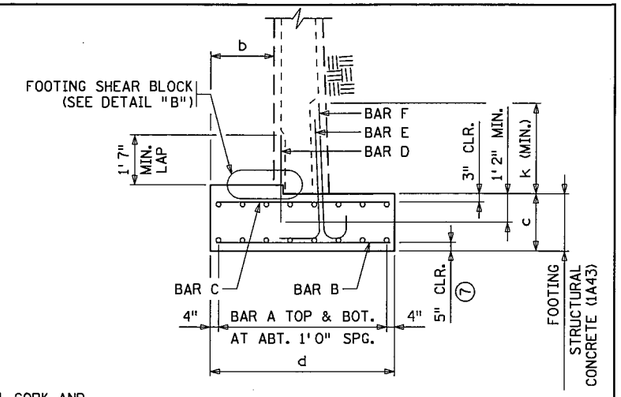

TYPICAL SECTION THROUGH SPREAD FOOTING

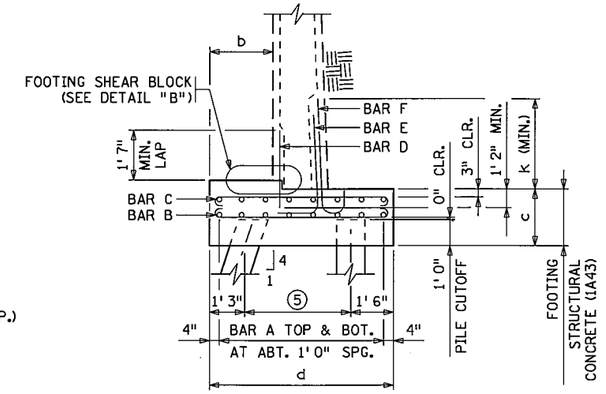

TYPICAL SECTION THROUGH PILE FOOTING

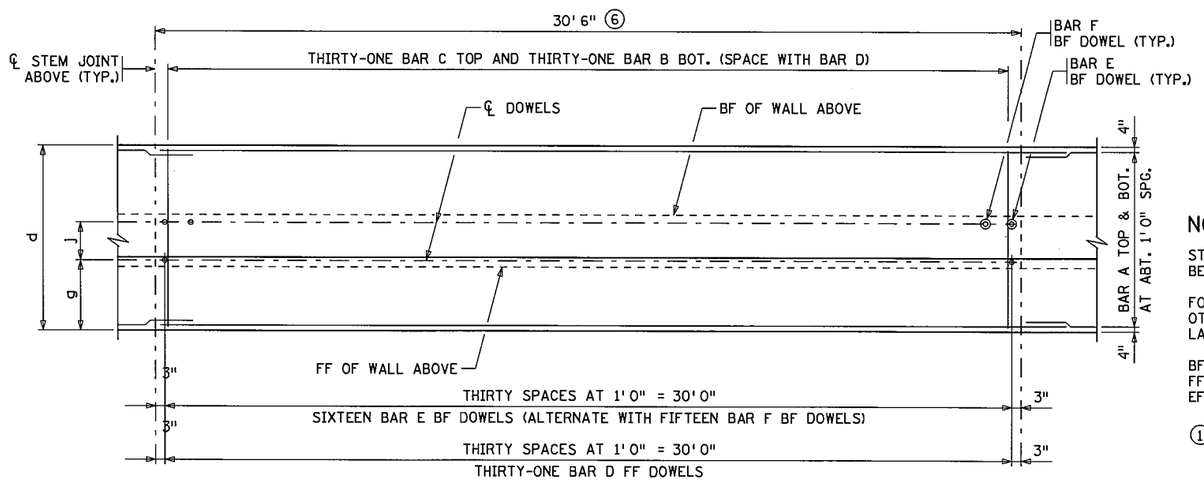

FOOTING PLAN ~ REINFORCEMENT

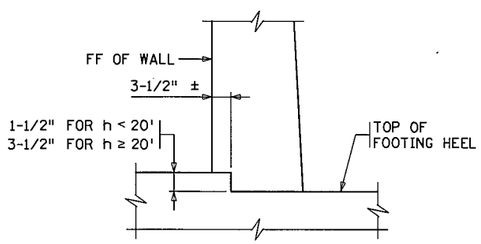

DETAIL "B"

NOTES:

STEM REINFORCEMENT IS TO BE SYMMETRICALLY/EQUALLY SPACED BETWEEN STEM JOINTS.

FOOTING REINFORCEMENT SYMMETRICAL ABOUT STEM JOINT ABOVE UNLESS OTHERWISE NOTED. SEE RETAINING WALL TABLES FOR PILE SPACING AND LAYOUT.

BF DENOTES BACK FACE.
FF DENOTES FRONT FACE.
EF DENOTES EACH FACE.

(1) STRAIGHT LINE BETWEEN ELEVATIONS SHOWN ON WALL ELEVATION (EXCEPT FOR STEPPED CONDITIONS). IF A BARRIER IS NOT USED, TOPS OF RETAINING WALL COULD BE USED.

(2) TYPE I DRAIN. SEE DETAIL "A" ON STANDARD PLAN 5-297.624 (1).

(3) TYPE II DRAIN. SEE DETAIL "A" ON STANDARD PLAN 5-297.624 (1).

(4) SEE STANDARD PLAN 5-297.624 (1).

(5) SEE GENERAL PLAN FOR PILE SPACING.

(6) AT THE CONTRACTOR'S OPTION, PANEL LENGTH MAY VARY UP TO ± 1'0". BAR CUTTING LISTS SHALL BE REVISED ACCORDINGLY BY THE CONTRACTOR.

(7) 5" CLR. FOR ALL BARS EXCEPT 2" CLR. MIN. FOR BAR D.

(8) SEE DETAIL "C" ON STANDARD PLAN 5-297.624(1).

(9) REBAR AND CONCRETE ARE INCLUDED IN THE PAY ITEM BY LINEAR FEET FOR THE BARRIER.

S.P. 179-020-031 S.P. 019-605-028

STANDARD SHEET NO. 5-297.621	TITLE: RETAINING WALL REINFORCEMENT DETAILS (SHORT WALLS) (PANELS __ - __)
STANDARD APPROVED: MAY 28, 2010	

STATE PROJ. NO. 1901-148 (TH 13) SHEET NO. 333 OF 442 SHEETS

REVISED: 5-28-2010

APPROVED: MAY 31, 2006

STATE BRIDGE ENGINEER

PLOTTED/REVISED: 11-JUN-2012 15:03
DISTRICT #: METRO
USER NAME: s621J_spn
PATH & FILENAME: Projects/DM_ROS/013/1901/148/Design/StandardPlans/s621J_spn.dgn
FILE NAME: s621J_spn

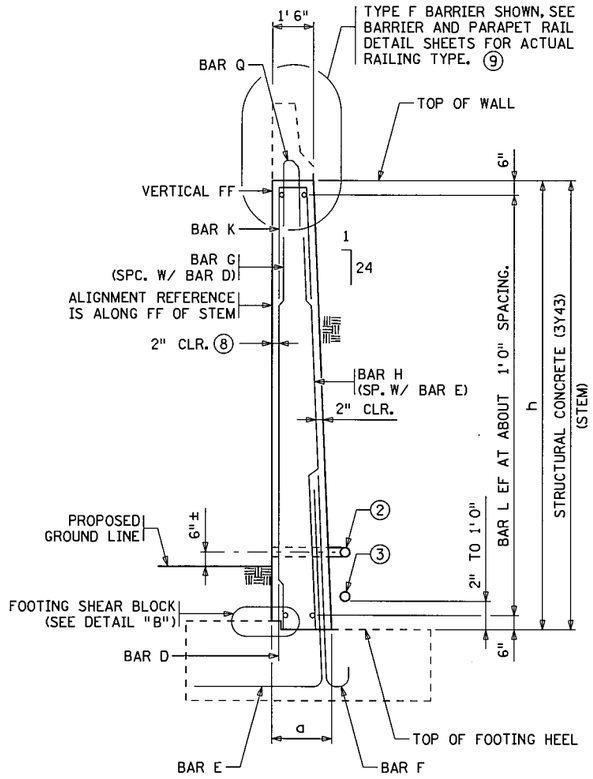

WALL SECTION

BARRIER OPTION SHOWN

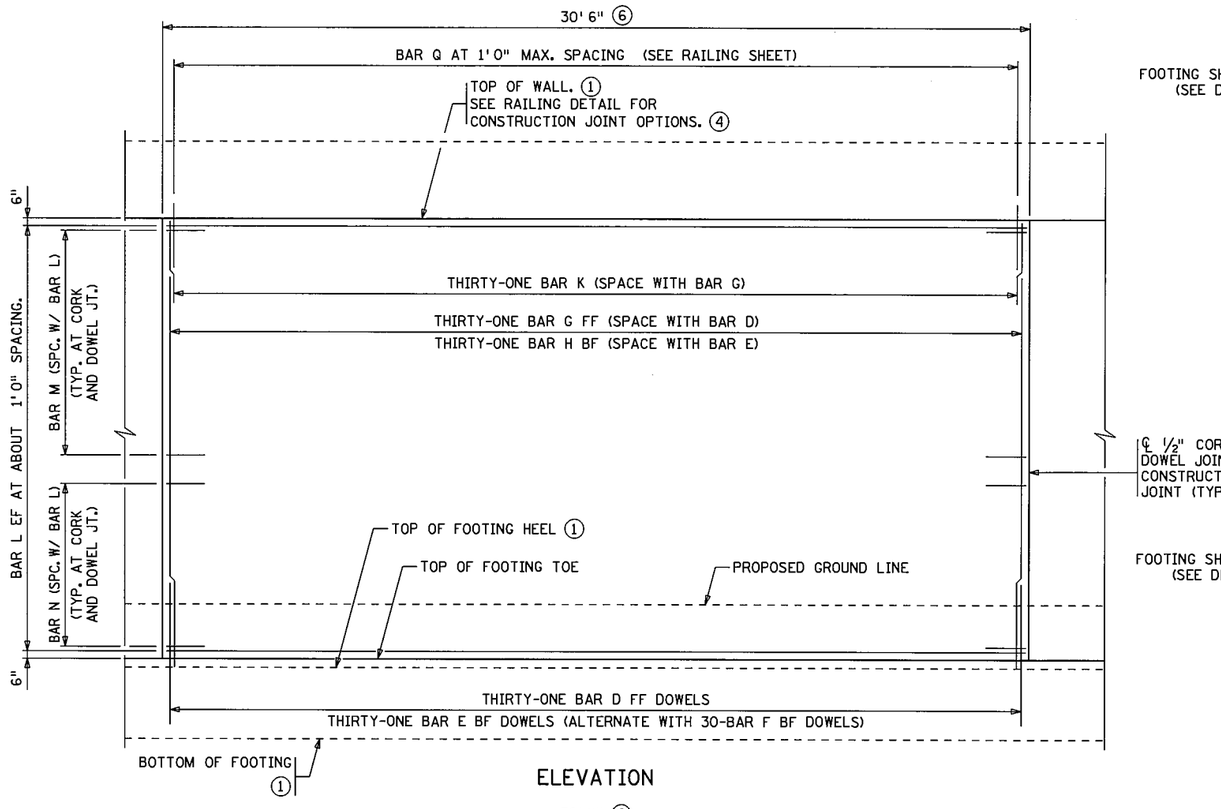

ELEVATION

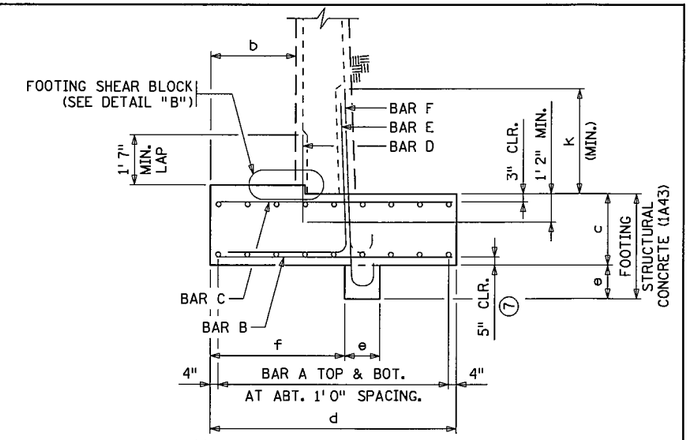

TYPICAL SECTION THROUGH SPREAD FOOTING

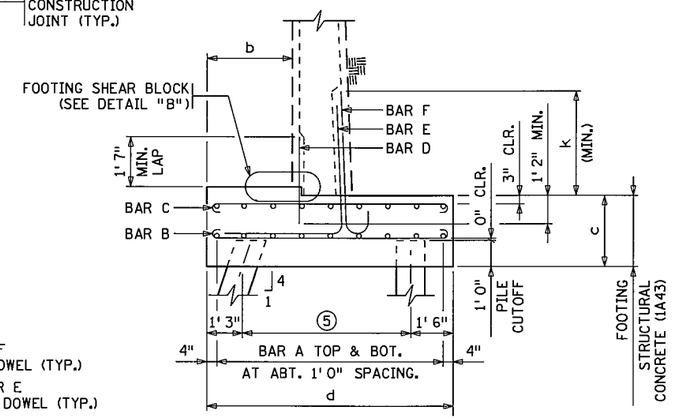

TYPICAL SECTION THROUGH PILE FOOTING

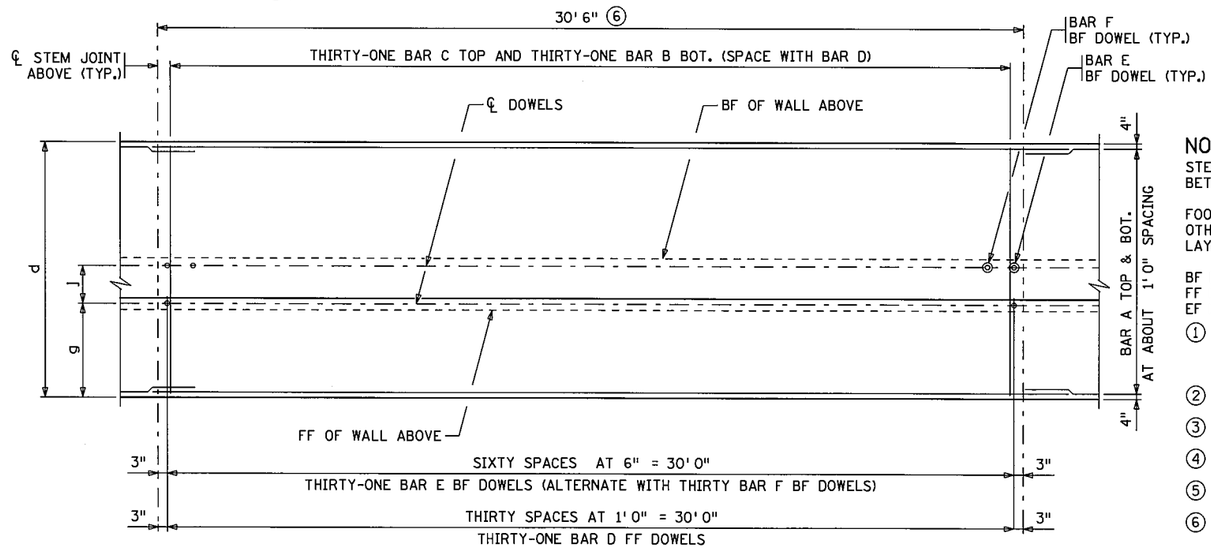

FOOTING PLAN ~ REINFORCEMENT

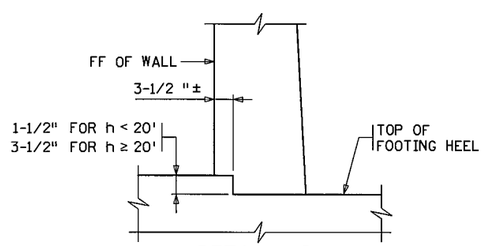

DETAIL "B"

NOTES:

STEM REINFORCEMENT IS TO BE SYMMETRICALLY/EQUALLY SPACED BETWEEN STEM JOINTS.

FOOTING REINFORCEMENT SYMMETRICAL ABOUT STEM JOINT ABOVE UNLESS OTHERWISE NOTED. SEE RETAINING WALL TABLES FOR PILE SPACING AND LAYOUT.

BF DENOTES BACK FACE.
FF DENOTES FRONT FACE.
EF DENOTES EACH FACE.

1. STRAIGHT LINE BETWEEN ELEVATIONS SHOWN ON WALL ELEVATION (EXCEPT FOR STEPPED CONDITIONS). IF A BARRIER IS NOT USED, TOPS OF RETAINING WALL COULD BE USED.
2. TYPE I DRAIN. SEE DETAIL "A" ON STANDARD PLAN 5-297.624 (1).
3. TYPE II DRAIN. SEE DETAIL "A" ON STANDARD PLAN 5-297.624 (1).
4. SEE STANDARD PLAN 5-297.624 (1).
5. SEE GENERAL PLAN FOR PILE SPACING.
6. AT THE CONTRACTOR'S OPTION, PANEL LENGTHS MAY VARY UP TO ± 1' 0". BAR CUTTING LISTS SHALL BE REVISED ACCORDINGLY BY THE CONTRACTOR.
7. 5" CLR. FOR ALL BARS EXCEPT 2" CLR. MIN. FOR BAR D.
8. SEE DETAIL "C" ON STANDARD PLAN 5-297.624(1).
9. REBAR AND CONCRETE ARE INCLUDED IN THE PAY ITEM BY LINEAR FEET FOR THE BARRIER.

S.P. 179-020-031 S.P. 019-605-028

STANDARD SHEET NO. 5-297.622	TITLE: RETAINING WALL REINFORCEMENT DETAILS (MEDIUM WALLS) (PANELS __ - __)
STANDARD APPROVED: MAY 28, 2010	

STATE PROJ. NO. 1901-148 (TH 13) SHEET NO. 334 OF 442 SHEETS

REVISED: 5-28-2010

APPROVED: MAY 31, 2006

STATE BRIDGE ENGINEER

PLOTTED/REVISED: 11-JUN-2012 15:04
DISTRICT #: METRO
USER NAME: s622_J_spn
PATH & FILENAME: Projects/DM_ROS/013/1901/148/Design/StandardPlans/s622_J_spndgn
FILE NAME: s622_J_spn

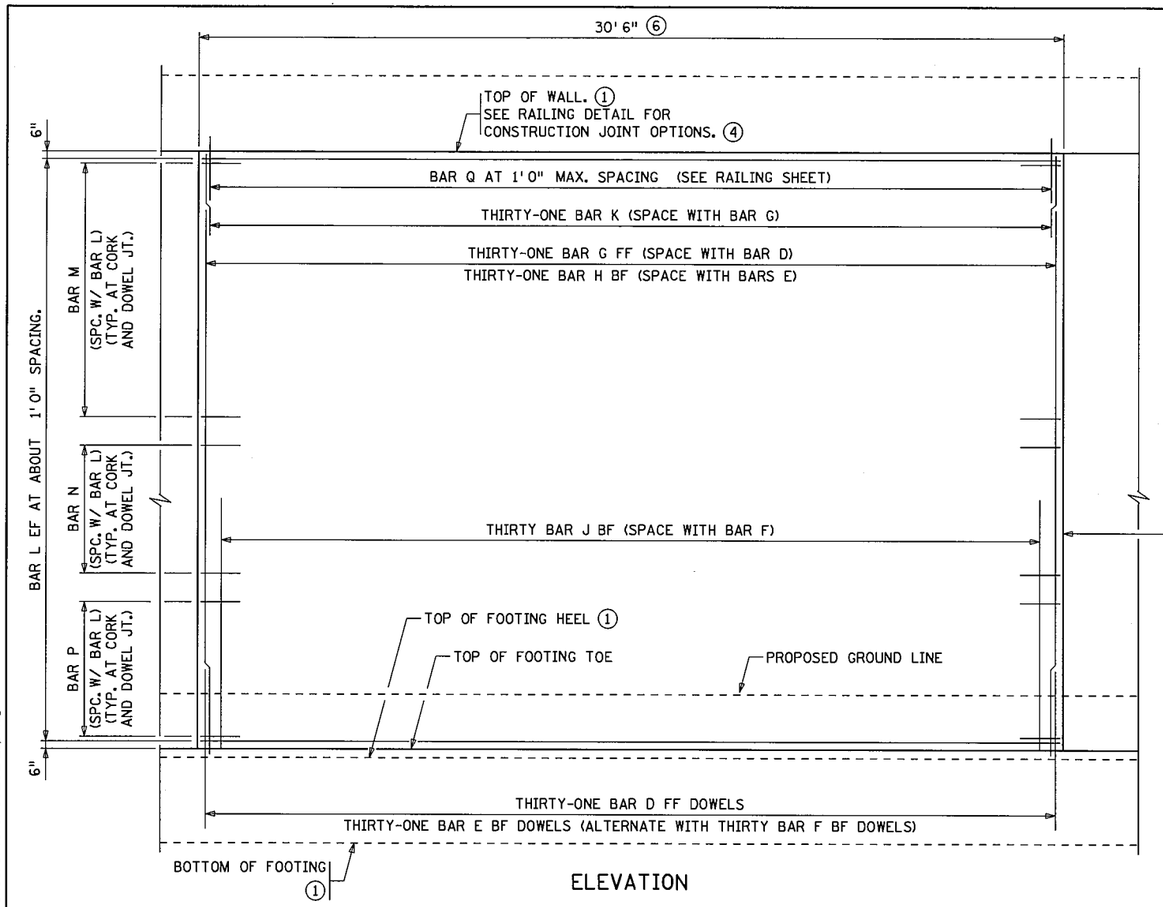

ELEVATION

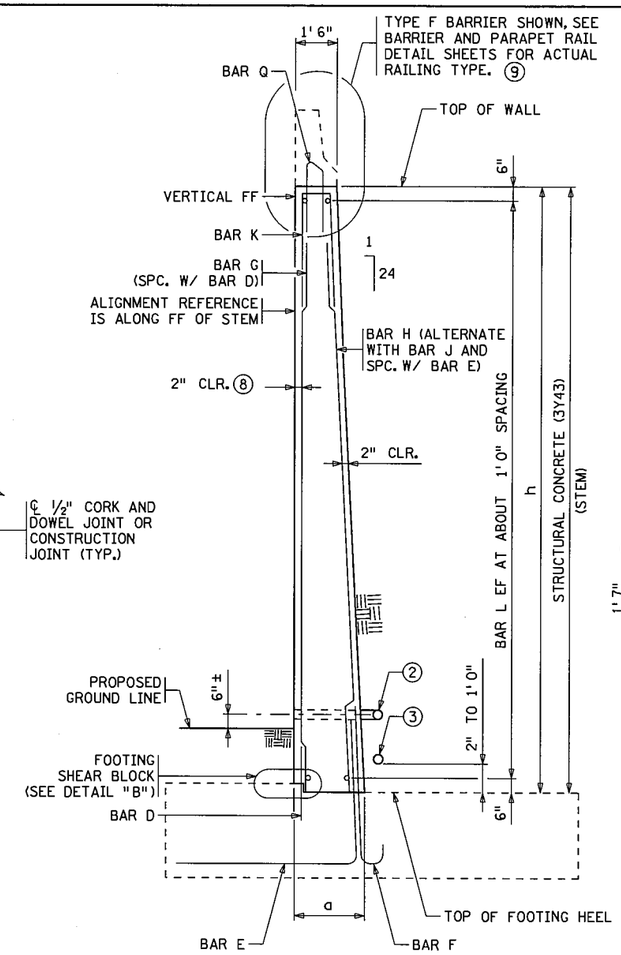

WALL SECTION
BARRIER OPTION SHOWN

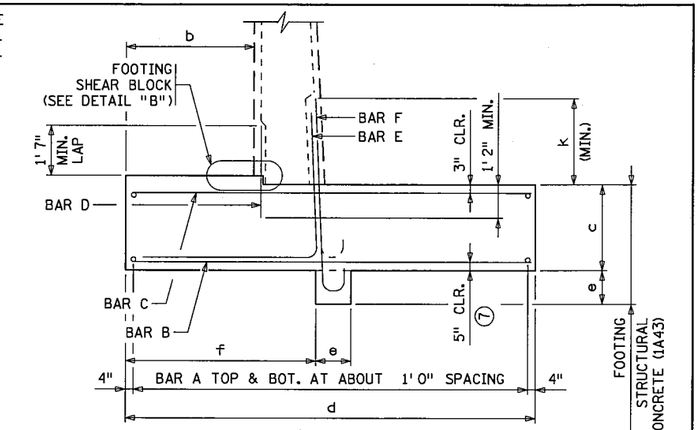

TYPICAL SECTION THROUGH SPREAD FOOTING

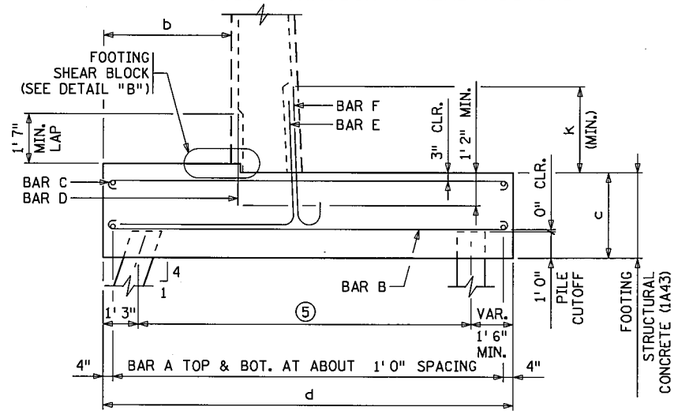

TYPICAL SECTION THROUGH PILE FOOTING

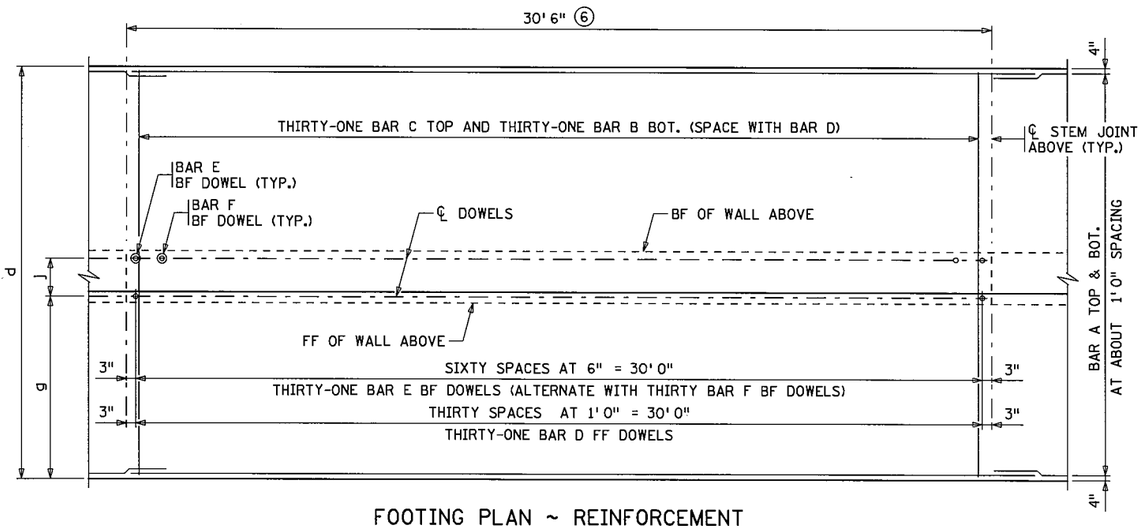

FOOTING PLAN ~ REINFORCEMENT

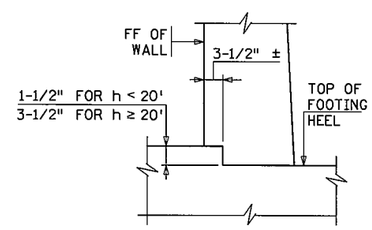

DETAIL "B"

NOTES:

STEM REINFORCEMENT IS TO BE SYMMETRICALLY/EQUALLY SPACED BETWEEN STEM JOINTS.

FOOTING REINFORCEMENT SYMMETRICAL ABOUT STEM JOINT ABOVE UNLESS OTHERWISE NOTED. SEE RETAINING WALL TABLES FOR PILE SPACING AND LAYOUT.

BF DENOTES BACK FACE.
FF DENOTES FRONT FACE.
EF DENOTES EACH FACE.

① STRAIGHT LINE BETWEEN ELEVATIONS SHOWN ON WALL ELEVATION (EXCEPT FOR STEPPED CONDITIONS). IF A BARRIER IS NOT USED, TOPS OF RETAINING WALL COULD BE USED.

② TYPE I DRAIN. SEE DETAIL "A" ON STANDARD PLAN 5-297.624 (1).

③ TYPE II DRAIN. SEE DETAIL "A" ON STANDARD PLAN 5-297.624 (1).

④ SEE STANDARD PLAN 5-297.624 (1).

⑤ SEE GENERAL PLAN FOR PILE SPACING.

⑥ AT THE CONTRACTOR'S OPTION, PANEL LENGTH MAY VARY UP TO ± 1' 0". BAR CUTTING LISTS SHALL BE REVISED ACCORDINGLY BY THE CONTRACTOR.

⑦ 5" CLR. FOR ALL BARS EXCEPT 2" CLR. FOR BAR D.

⑧ SEE DETAIL "C" ON STANDARD PLAN 5-297.624(1).

⑨ REBAR AND CONCRETE ARE INCLUDED IN THE PAY ITEM BY LINEAR FEET FOR THE BARRIER.

S.P. 179-020-031 S.P. 019-605-028

STANDARD SHEET NO. 5-297.623	TITLE: RETAINING WALL REINFORCEMENT DETAILS (TALL WALLS) (PANELS __ - __)
STANDARD APPROVED: MAY 28, 2010	

STATE PROJ. NO. 1901-148 (TH 13) SHEET NO. 335 OF 442 SHEETS

REVISED: 5-28-2010

APPROVED: MAY 31, 2006

STATE BRIDGE ENGINEER

PLOTTED/REVISED: 11-JUN-2012 15:05
DISTRICT #: METRO
USER NAME: s623_l_spn
PATH & FILENAME: Projects/DM_ROS/013/1901/148/Design/StandardPlans/s623_l_spn.dgn
FILE NAME: s623_l_spn

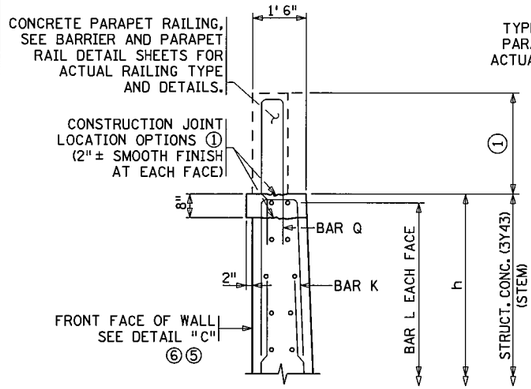

CONCRETE PARAPET RAILING DETAIL

2" COPING OPTION SHOWN

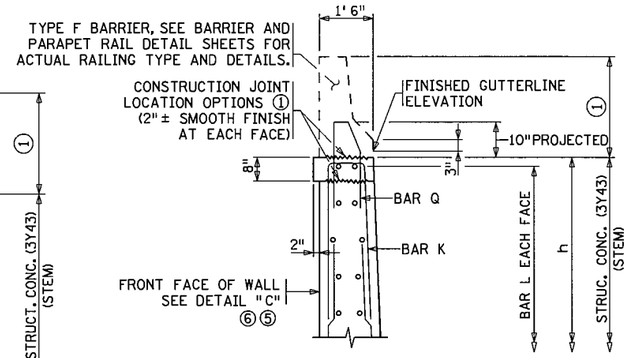

TYPE F RAILING DETAIL

2" COPING OPTION SHOWN

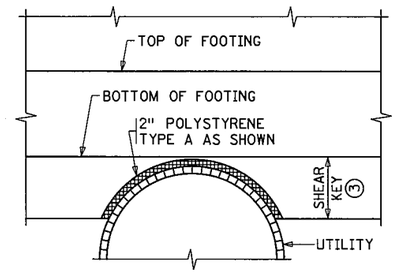

PIPE UNDER SPREAD FOOTING (THROUGH SHEAR KEY)

CHECK PIPE TO DETERMINE IF IT CAN TAKE THE LOAD

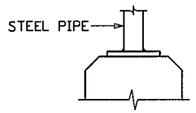

METAL RAILPOST DETAIL

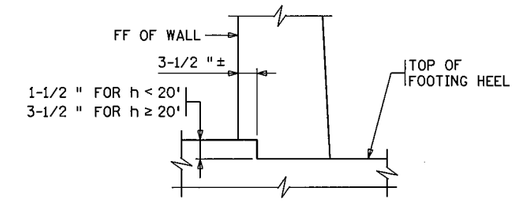

DETAIL "B"

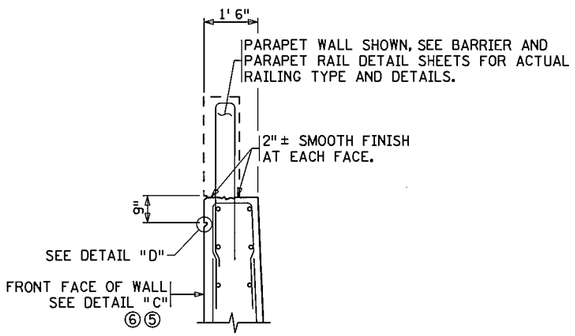

RAIL BASE DETAIL

HORIZONTAL REVEAL OPTION SHOWN

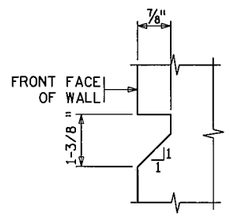

DETAIL "D"

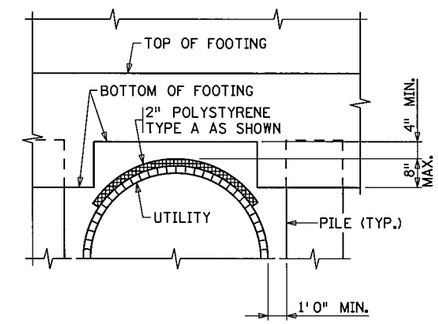

PIPE THROUGH PILE FOOTING

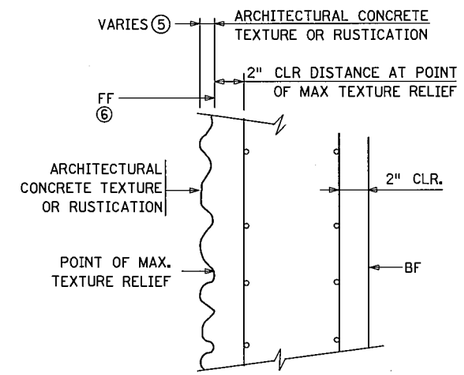

DETAIL "C"

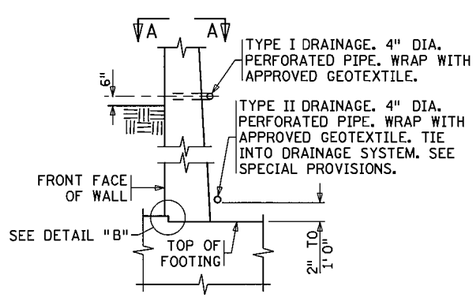

DETAIL "A"

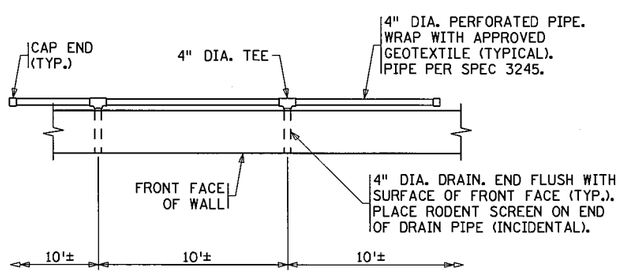

SECTION A-A

TYPE I DRAINAGE DETAIL

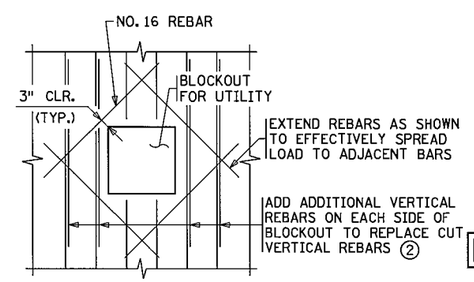

UTILITY BLOCKOUT DETAIL

NOTES:

ARCHITECTURAL TREATMENT OPTION ON FRONT FACE OF RETAINING WALL TO BE DETERMINED BY Mn/DOT.

① ALL CONCRETE ABOVE JOINT LOCATION SHALL BE STRUCTURAL CONCRETE (3Y46).

② FIELD CUT/ADJUST VERTICAL AND HORIZONTAL REINFORCEMENT AS NECESSARY TO CLEAR BLOCKOUT. PLACE REINFORCEMENT AS SHOWN.

③ MODIFY FOR INTERRUPTION.

~~④ PAID FOR AS SPEC. 2502. DRAINAGE SYSTEM (LUMP SUM)~~

⑤ THE THICKNESS OF THE ARCHITECTURAL CONCRETE TEXTURE VARIES WITH THE TEXTURE RELIEF. THE STRUCTURAL CONCRETE 3Y43 QUANTITIES DO NOT INCLUDE THE MATERIAL WITHIN THE ARCHITECTURAL CONCRETE TEXTURE. MATERIAL NEEDED FOR THE TEXTURING SHALL BE INCIDENTAL FOR WHICH NO DIRECT PAYMENT WILL BE MADE. SEE SPECIAL PROVISIONS 2411. TEXTURE RELIEF SHALL ADHERE TO FHWA CRASH BARRIER GUIDANCE WHENEVER THE WALL FACE IS INSIDE OR NEAR THE CLEAR ZONE.

⑥ FOR RETAINING WALLS THAT ABUT A BRIDGE OR BRIDGE WING WALL, NOTE THAT THE DESIGNATION OF "FRONT FACE" MAY VARY FROM THE BRIDGE PLANS TO THE RETAINING WALL PLANS.

S.P. 179-020-031 S.P. 019-605-028

REVISED: 6/14/2010

APPROVED: MAY 31, 2006

STATE BRIDGE ENGINEER

CERTIFIED BY _____ LICENSED PROFESSIONAL ENGINEER 6/18/12 DATE

PRINTED NAME: BRADLEY J. SKOW LIC. NO. 18520

STANDARD SHEET NO. ~~5-297.624 (1 OF 3)~~

STANDARD APPROVED: JUNE 14, 2010

TITLE: RETAINING WALL MISCELLANEOUS DETAILS

STATE PROJ. NO. 1901-148 (TH 13) SHEET NO. 336 OF 442 SHEETS

PLOTTED/REVISED: 12-JUN-2012 14:41
DISTRICT #: METRO
USER NAME: s624_l_spn
PATH & FILENAME: Projects/DM_ROS/013/1901/148/Design/StandardPlans/s624_l_spn.dgn
FILE NAME: s624_l_spn

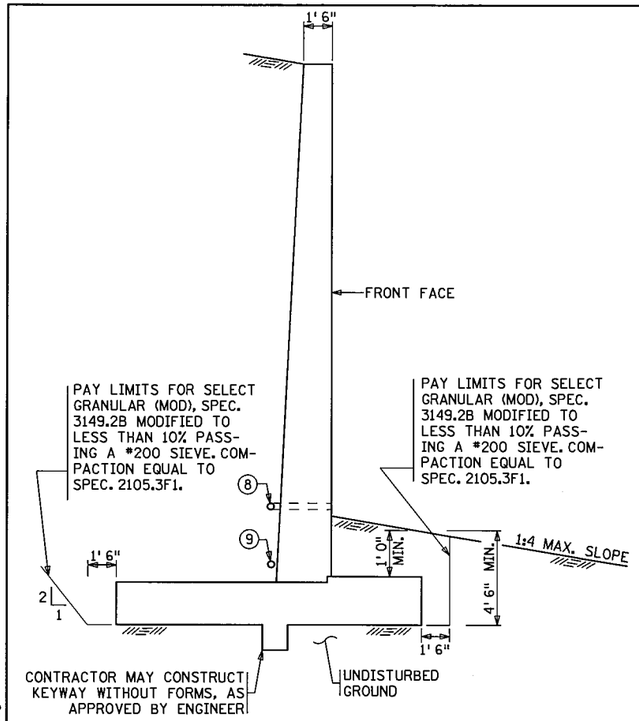

TYPICAL SECTION

INPLACE SOIL OPTION SHOWN

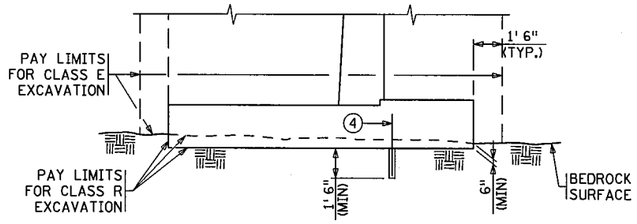

ROCK EXCAVATION OPTION

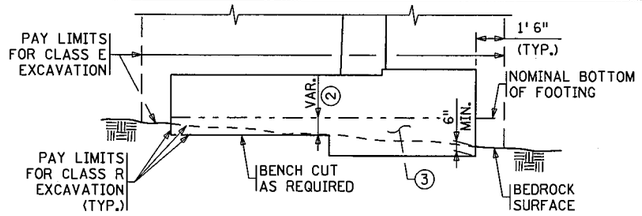

ROCK SUBCUT WITH CONCRETE BACKFILL OPTION

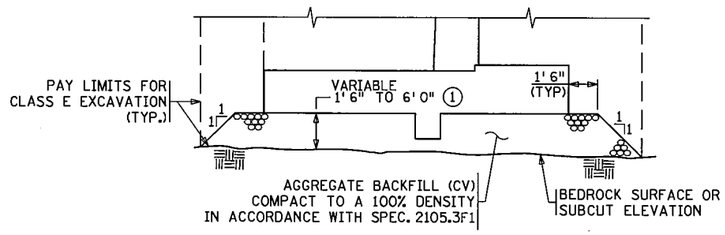

AGGREGATE BACKFILL OPTION

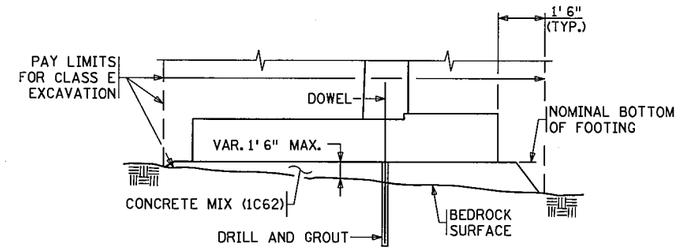

DOWEL AND LEAN CONCRETE BACKFILL OPTION

FOUNDATION OPTIONS

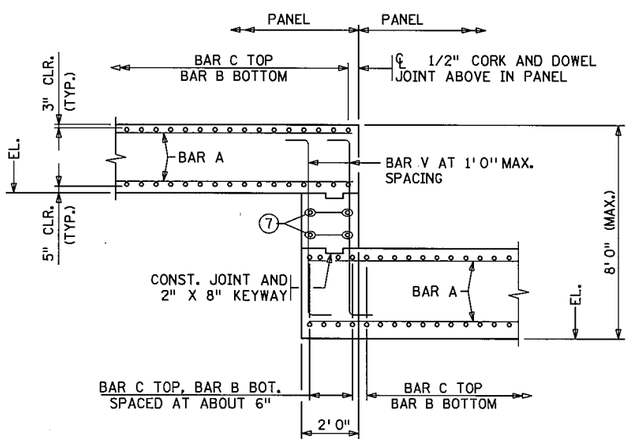

STEPPED FOOTING DETAIL - LONGIT. SECTION ⑤⑥

TYPE 1 - VARIABLE STEP HEIGHT
(SPREAD FOOTING SHOWN)

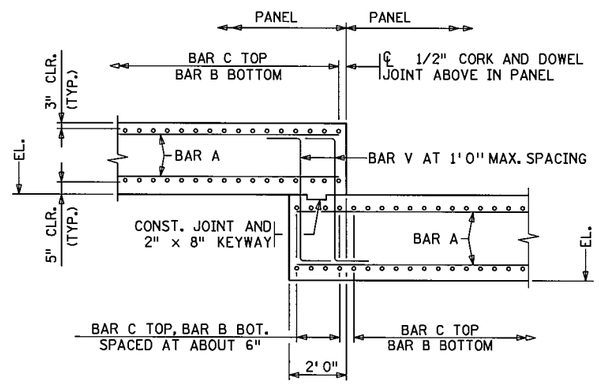

STEPPED FOOTING DETAIL - LONGIT. SECTION ⑤⑥

TYPE 2 - MINIMUM STEP HEIGHT
(SPREAD FOOTING SHOWN)

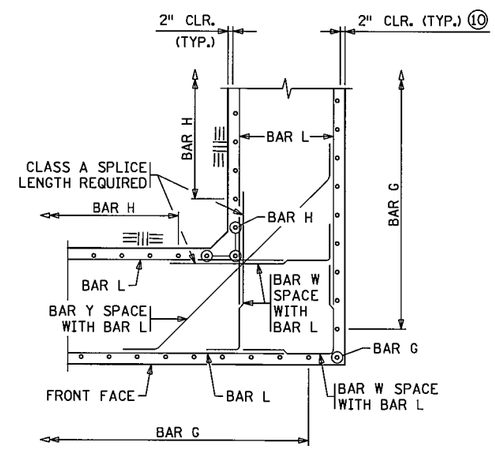

OUTSIDE CORNER DETAIL - PLAN VIEW ⑤

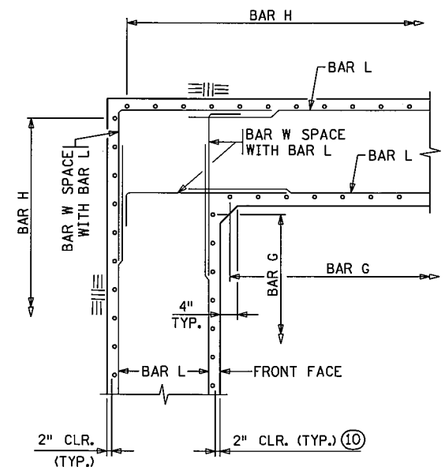

INSIDE CORNER DETAIL - PLAN VIEW ⑤

NOTES:

1. MINIMUM DEPTH 1 FT. 6 INCH OR SHEAR KEY DEPTH. DESIGNER TO DETERMINE MAXIMUM DEPTH.
2. SEE SPECIAL PROVISIONS FOR PAYMENT OF ADDITIONAL CONCRETE.
3. STRUCTURAL CONCRETE (1A43) OR LEAN CONCRETE BACKFILL (1C62), AS APPROVED BY ENGINEER.
4. CERTAIN ROCKS (SHALE, ETC.) BREAK OFF IN LAYERS. IN SUCH CASES, DRILL HOLES FOR ANCHORS TO KEY FOOTING TO ROCK.
5. ALL BARS RELATED TO STEPPED FOOTING AND CORNER CONSTRUCTION SHALL BE INCIDENTAL WITH NO DIRECT COMPENSATION.
6. ALL STRUCTURAL CONCRETE (1A43) RELATED TO THE STEPPED FOOTING SHALL BE INCIDENTAL WITH NO DIRECT COMPENSATION.
7. 6 INCH MAX. SPACING. BARS TO BE SAME TYPE AS BAR B OF THE LOWER FOOTING. NO BARS REQUIRED IF DISTANCE BETWEEN FOOTINGS IS LESS THAN 6 INCHES.
8. TYPE I DRAIN. SEE DETAIL "A" ON STANDARD PLAN 5-297.624 (1 OF 3).
9. TYPE II DRAIN. SEE DETAIL "A" ON STANDARD PLAN 5-297.624 (1 OF 3).
10. SEE DETAIL "C" ON STANDARD PLAN 5-297.624(1).

S.P. 179-020-031 S.P. 019-605-028

STANDARD SHEET NO. 5-297.624 (2 OF 3)	TITLE: RETAINING WALL MISCELLANEOUS DETAILS
STANDARD APPROVED: MAY 31, 2006	

STATE PROJ. NO. 1901-148 (TH 13) SHEET NO. 337 OF 442 SHEETS

REVISED:

APPROVED: MAY 31, 2006

STATE BRIDGE ENGINEER

PLOTTED/REVISED: 11-JUN-2012 15:16
DISTRICT #: METRO
USER NAME: s624_2_spn
PATH & FILENAME: Projects/DM_ROS/013/1901/148/Design/StandardPlans/s624_2_spn.dgn
FILE NAME: s624_2_spn

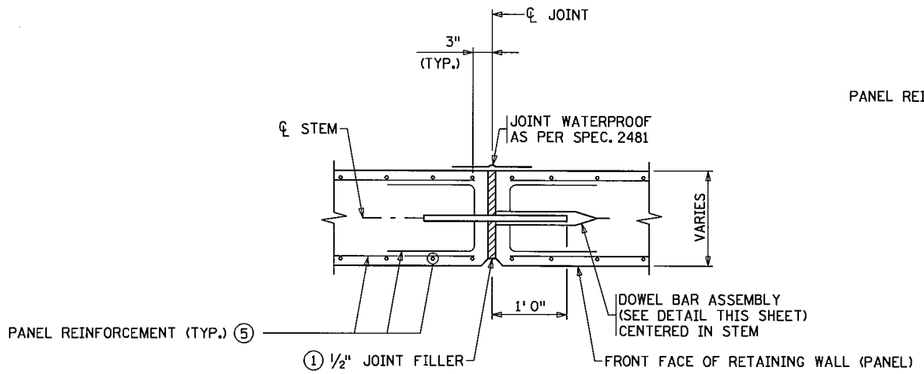

CORK AND DOWELED JOINT DETAIL

(TYPICAL SECTION THROUGH JOINT)

②④

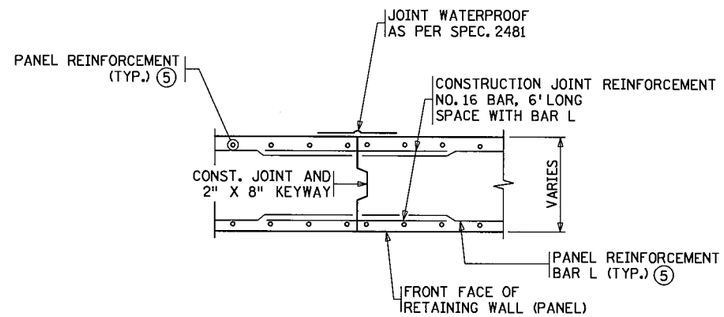

CONSTRUCTION JOINT DETAIL

(TYPICAL SECTION THROUGH JOINT)

②④

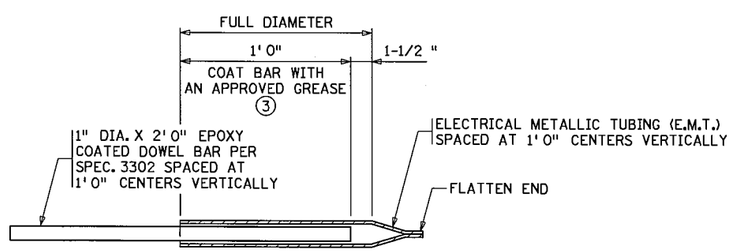

DOWEL BAR ASSEMBLY

NOTES:

THE MATERIALS AND PLACEMENT OF THE CORK AND DOWEL JOINT/ CONSTRUCTION JOINT (DOWEL BAR ASSEMBLIES, NO. 16 REINFORCING BARS, JOINT FILLER, AND JOINT WATERPROOFING) ARE INCIDENTAL FOR WHICH NO DIRECT PAYMENT WILL BE MADE.

THE CONTRACTOR SHALL ASSIGN TO THE REINFORCING BAR SUPPLIER THE RESPONSIBILITY OF SUPPLYING THE NECESSARY MATERIALS ASSOCIATED WITH THE DETAILS SHOWN ON THIS SHEET.

① JOINT FILLER SHALL BE CORK (SPEC. 2401.3E3).

② CONSTRUCTION JOINT(S) MAY BE SUBSTITUTED FOR SOME OF THE CORK AND DOWEL JOINT(S) AT THE CONTRACTOR'S OPTION. CORK AND DOWEL JOINT(S) MUST BE SPACED AT 91'-6" MAXIMUM. CORK AND DOWEL JOINT(S) MUST BE USED IN VERTICAL JOINT(S) AT FOOTING STEP LOCATIONS.

③ GREASE SHALL BE AN APPROVED HIGH PRESSURE TYPE THAT IS EFFECTIVE OVER THE FULL RANGE OF EXPECTED TEMPERATURES AND RESISTANT TO CHEMICAL ACTION.

④ DOWEL BAR ASSEMBLY MUST BE INSTALLED PERPENDICULAR TO JOINT AND PARALLEL TO THE WALL FACE, AND TO EACH OTHER.

⑤ SEE PANEL SHEETS FOR REINFORCING DETAILS.

S.P. 179-020-031 S.P. 019-605-028

STANDARD SHEET NO. 5-297.624 (3 OF 3)	TITLE: RETAINING WALL MISCELLANEOUS DETAILS
STANDARD APPROVED: MAY 31, 2006	

STATE PROJ. NO. 1901-148 (TH 13) SHEET NO. 338 OF 442 SHEETS

REVISED:

APPROVED: MAY 31, 2006

STATE BRIDGE ENGINEER

PLOTTED/REVISED: 11-JUN-2012 15:08
DISTRICT #: METRO
USER NAME: s624_3_spn
PATH & FILENAME: Projects/DM_ROS/013/1901/148/Design/StandardPlans/s624_3_spn.dgn
FILE NAME: s624_3_spn

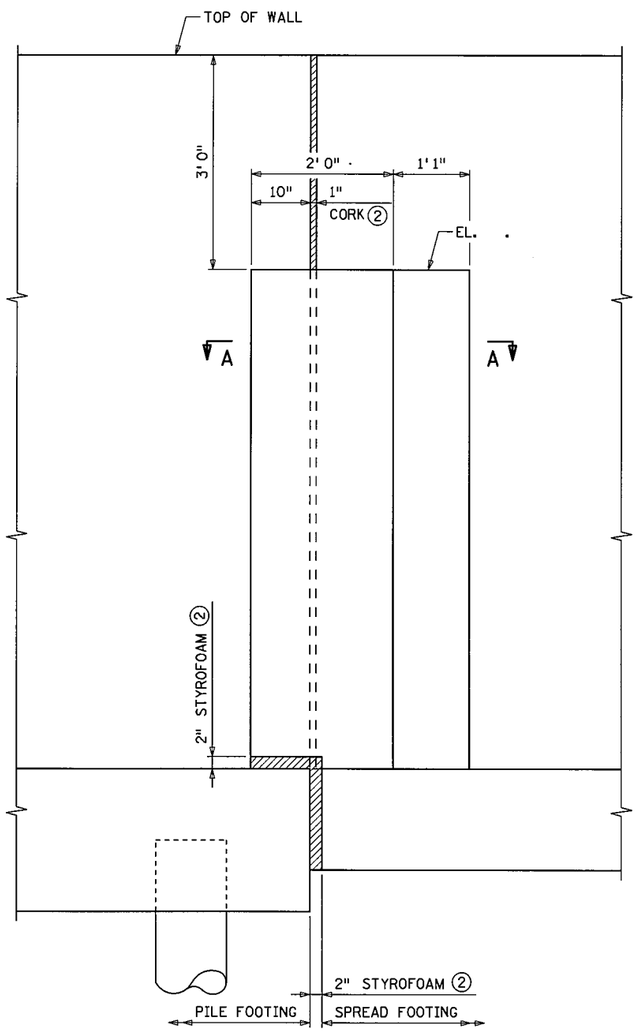

ELEVATION

BF SHOWN

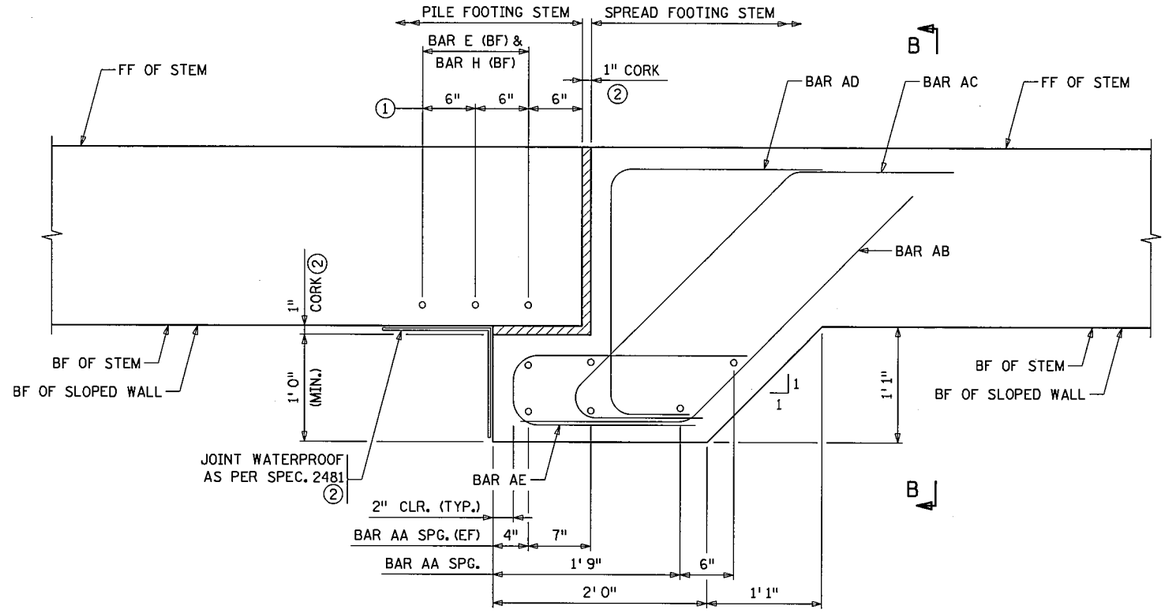

SECTION A-A

FOOTINGS NOT SHOWN
(ONLY SHEAR KEY REINFORCEMENT SHOWN. SEE WALL REINFORCEMENT PANEL SHEETS FOR OTHER REINFORCEMENT.)

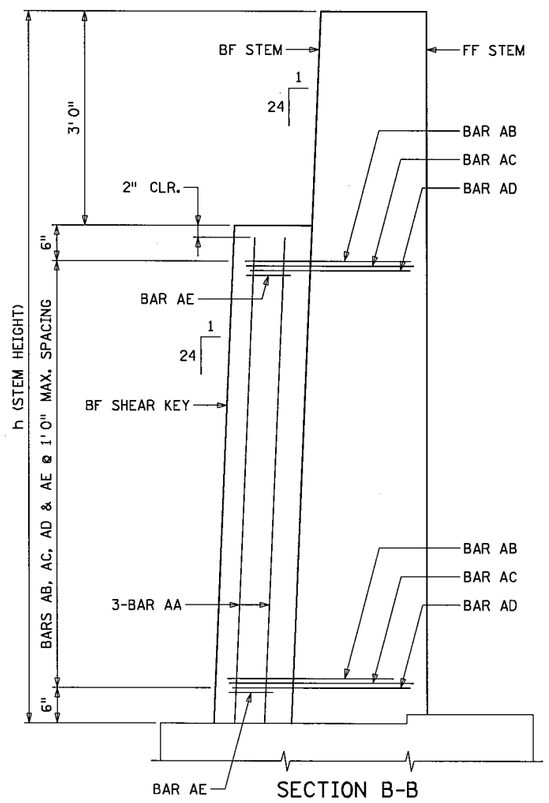

SECTION B-B

ONLY SHEAR KEY REINFORCEMENT SHOWN
(BF OF SLOPED WALL SHOWN)

BILL OF REINFORCEMENT FOR SHEAR KEY

	BAR	MARK	NO.	LENGTH	SHAPE	LOCATION
①	E	F 05E	3	'- "	①	FOOTING DOWEL BF
①	H	S 02E	3	'- "		STEM VERTICAL BF
	AA	S1603E	6	'- "		SHEAR KEY VERTICAL
	AB	S1304E		4'-11"		SHEAR KEY TIE
	AC	S1305E		6'-4" TO X		SHEAR KEY TIE
	AD	S1606E		5'-0" TO X		SHEAR KEY TIE
	AE	S1307E		4'-8"		SHEAR KEY TIE

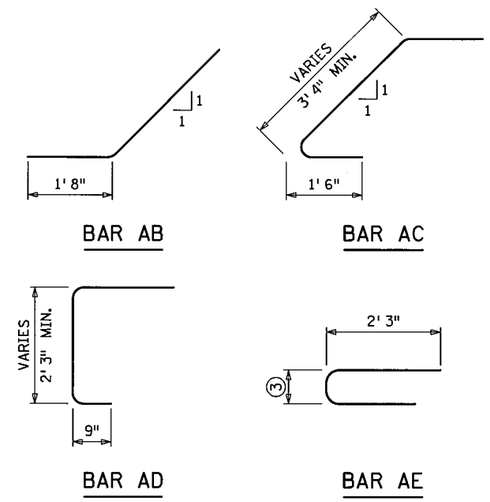

NOTES:

USE THIS DETAIL AT A RETAINING WALL JOINT WHEN THE WALL IS SUPPORTED ON PILE FOUNDATION ON ONE SIDE OF THE JOINT AND SPREAD FOOTING ON THE OTHER SIDE.

THE SHEAR KEY SHALL BE PROVIDED ON THE SPREAD FOOTING WALL AS SHOWN.

SHEAR KEY IS NOT REQUIRED IF:
- WALL HEIGHT FROM TOP OF FOOTING TO TOP OF WALL IS LESS THAN 16 FEET WITHOUT A NOISE BARRIER.
- THE COMBINED HEIGHT OF RETAINING WALL AND NOISE BARRIER IS LESS THAN 23 FEET AND WALL HEIGHT FROM TOP OF FOOTING TO GRADE IS LESS THAN 13 FEET.

BF DENOTES BACK FACE.
FF DENOTES FRONT FACE.
EF DENOTES EACH FACE.

① SEE PANEL TABULATIONS FOR BAR SIZE AND LENGTH.

② JOINT WATERPROOF AS PER SPEC. 2481, 2 INCHES STYROFOAM AND 1 INCH CORK JOINT FILLER ARE INCIDENTAL.

③ 8 INCHES WHEN BACK FACE OF WALL ON PILE FOOTING AND SHEAR KEY HAVE UNIFORM SLOPE. VARIES (8 INCHES MININMUM) WHEN BACK FACE OF WALL ON PILE FOOTING AND SHEAR KEY HAVE NON-UNIFORM SLOPE.

S.P. 179-020-031 S.P. 019-605-028

STANDARD SHEET NO. 5-297.625	TITLE: RETAINING WALL SHEAR KEY DETAILS
STANDARD APPROVED: MAY 31, 2006	

STATE PROJ. NO. 1901-148 (TH 13) SHEET NO. 339 OF 442 SHEETS

REVISED:

APPROVED: MAY 31, 2006

STATE BRIDGE ENGINEER

PLOTTED/REVISED: 11-JUN-2012 15:08
DISTRICT #: METRO
USER NAME: s625_l_spn
PATH & FILENAME: Projects/DM_ROS/013/1901/148/Design/StandardPlans/s625_l_spn.dgn
FILE NAME: s625_l_spn

WALL LOADING CASE:
LEVEL FILL

SHORT WALL (5'-12')
MEDIUM WALL (13'-16')
TALL WALL (17'-30')

WALL REINFORCEMENT - SPREAD FOOTING				
STEM HEIGHT h	STEM	FOOTING		
	DOWEL SIZE AND SPACING	TOE (BOTTOM TRANSVERSE) ①	HEEL (TOP TRANSVERSE) ②	LONGITUDINAL (TOP AND BOT.)
		BAR SIZE & SPA.	BAR SIZE & SPA.	BAR SIZE & SPA.
5	#16 @ 12"	#16 @ 12"	#16 @ 12"	#16 @ 12"
6	#16 @ 12"	#16 @ 12"	#16 @ 12"	#16 @ 12"
7	#16 @ 12"	#16 @ 12"	#16 @ 12"	#16 @ 12"
8	#16 @ 12"	#16 @ 12"	#16 @ 12"	#16 @ 12"
9	#16 @ 12"	#16 @ 12"	#16 @ 12"	#16 @ 12"
10	#16 @ 12"	#16 @ 12"	#16 @ 12"	#16 @ 12"
11	#16 @ 12"	#16 @ 12"	#16 @ 12"	#16 @ 12"
12	#16 @ 12"	#16 @ 12"	#16 @ 12"	#16 @ 12"
13	#16 @ 6"	#16 @ 12"	#16 @ 12"	#16 @ 12"
14	#16 @ 6"	#19 @ 12"	#16 @ 12"	#16 @ 12"
15	#16 @ 6"	#19 @ 12"	#19 @ 12"	#16 @ 12"
16	#16 @ 6"	#22 @ 12"	#19 @ 12"	#16 @ 12"
17	#19 @ 6"	#19 @ 12"	#19 @ 12"	#16 @ 12"
18	#19 @ 6"	#19 @ 12"	#22 @ 12"	#16 @ 12"
19	#19 @ 6"	#19 @ 12"	#22 @ 12"	#16 @ 12"
20	#19 @ 6"	#19 @ 12"	#25 @ 12"	#16 @ 12"
21	#22 @ 6"	#19 @ 12"	#25 @ 12"	#16 @ 12"
22	#22 @ 6"	#22 @ 12"	#22 @ 12"	#16 @ 12"
23	#22 @ 6"	#22 @ 12"	#22 @ 12"	#16 @ 12"
24	#25 @ 6"	#22 @ 12"	#22 @ 12"	#16 @ 12"
25	#25 @ 6"	#22 @ 12"	#25 @ 12"	#16 @ 12"
26	#29 @ 6"	#19 @ 12"	#25 @ 12"	#19 @ 12"
27	#29 @ 6"	#22 @ 12"	#25 @ 12"	#19 @ 12"
28	#29 @ 6"	#25 @ 12"	#25 @ 12"	#19 @ 12"
29	#32 @ 6"	#19 @ 12"	#25 @ 12"	#19 @ 12"
30	#32 @ 6"	#19 @ 12"	#25 @ 12"	#19 @ 12"

NOTES:

FOOTING BAR SIZE, #16 BAR MINIMUM, PER Mn/DOT

① AREA OF STEEL PROVIDED INCLUDES BACK FACE STEM DOWELS, EXCLUDING #16 DOWELS, SEE STEM REINFORCEMENT.

② BASED ON GROSS SOIL LOAD ON HEEL.

WALL LOADING CASE:
2' - LIVE LOAD SURCHARGE

SHORT WALL (5'-9')
MEDIUM WALL (10'-14')
TALL WALL (15'-29')

WALL REINFORCEMENT - SPREAD FOOTING				
STEM HEIGHT h	STEM	FOOTING		
	DOWEL SIZE AND SPACING	TOE (BOTTOM TRANSVERSE) ①	HEEL (TOP TRANSVERSE) ②	LONGITUDINAL (TOP AND BOT.)
		BAR SIZE & SPA.	BAR SIZE & SPA.	BAR SIZE & SPA.
5	#16 @ 12"	#16 @ 12"	#16 @ 12"	#16 @ 12"
6	#16 @ 12"	#16 @ 12"	#16 @ 12"	#16 @ 12"
7	#16 @ 12"	#16 @ 12"	#16 @ 12"	#16 @ 12"
8	#16 @ 12"	#16 @ 12"	#16 @ 12"	#16 @ 12"
9	#16 @ 12"	#16 @ 12"	#16 @ 12"	#16 @ 12"
10	#16 @ 6"	#16 @ 12"	#16 @ 12"	#16 @ 12"
11	#16 @ 6"	#19 @ 12"	#16 @ 12"	#16 @ 12"
12	#16 @ 6"	#22 @ 12"	#16 @ 12"	#16 @ 12"
13	#16 @ 6"	#25 @ 12"	#16 @ 12"	#16 @ 12"
14	#16 @ 6"	#22 @ 12"	#16 @ 12"	#16 @ 12"
15	#19 @ 6"	#19 @ 12"	#16 @ 12"	#16 @ 12"
16	#19 @ 6"	#19 @ 12"	#16 @ 12"	#16 @ 12"
17	#19 @ 6"	#19 @ 12"	#19 @ 12"	#16 @ 12"
18	#22 @ 6"	#19 @ 12"	#19 @ 12"	#16 @ 12"
19	#22 @ 6"	#19 @ 12"	#19 @ 12"	#16 @ 12"
20	#25 @ 6"	#19 @ 12"	#22 @ 12"	#16 @ 12"
21	#25 @ 6"	#22 @ 12"	#22 @ 12"	#16 @ 12"
22	#25 @ 6"	#22 @ 12"	#22 @ 12"	#19 @ 12"
23	#29 @ 6"	#19 @ 12"	#22 @ 12"	#19 @ 12"
24	#29 @ 6"	#19 @ 12"	#25 @ 12"	#19 @ 12"
25	#32 @ 6"	#19 @ 12"	#25 @ 12"	#19 @ 12"
26	#32 @ 6"	#19 @ 12"	#25 @ 12"	#19 @ 12"
27	#32 @ 6"	#19 @ 12"	#25 @ 12"	#22 @ 12"
28	#36 @ 6"	#19 @ 12"	#29 @ 12"	#22 @ 12"
29	#36 @ 6"	#19 @ 12"	#29 @ 12"	#22 @ 12"
30	---	---	---	---

NOTES:

FOOTING BAR SIZE, #16 BAR MINIMUM, PER Mn/DOT

① AREA OF STEEL PROVIDED INCLUDES BACK FACE STEM DOWELS, EXCLUDING #16 DOWELS, SEE STEM REINFORCEMENT.

② BASED ON GROSS SOIL LOAD ON HEEL.

WALL LOADING CASE:
1:2 SLOPED FILL

SHORT WALL (5'-11')
MEDIUM WALL (12'-16')
TALL WALL (17'-29')

WALL REINFORCEMENT - SPREAD FOOTING				
STEM HEIGHT h	STEM	FOOTING		
	DOWEL SIZE AND SPACING	TOE (BOTTOM TRANSVERSE) ①	HEEL (TOP TRANSVERSE) ②	LONGITUDINAL (TOP AND BOT.)
		BAR SIZE & SPA.	BAR SIZE & SPA.	BAR SIZE & SPA.
5	#16 @ 12"	#16 @ 12"	#16 @ 12"	#16 @ 12"
6	#16 @ 12"	#16 @ 12"	#16 @ 12"	#16 @ 12"
7	#16 @ 12"	#16 @ 12"	#16 @ 12"	#16 @ 12"
8	#16 @ 12"	#16 @ 12"	#16 @ 12"	#16 @ 12"
9	#16 @ 12"	#16 @ 12"	#16 @ 12"	#16 @ 12"
10	#16 @ 12"	#16 @ 12"	#16 @ 12"	#16 @ 12"
11	#16 @ 12"	#16 @ 12"	#16 @ 12"	#16 @ 12"
12	#16 @ 6"	#19 @ 12"	#16 @ 12"	#16 @ 12"
13	#16 @ 6"	#19 @ 12"	#19 @ 12"	#16 @ 12"
14	#16 @ 6"	#22 @ 12"	#19 @ 12"	#16 @ 12"
15	#16 @ 6"	#22 @ 12"	#19 @ 12"	#16 @ 12"
16	#16 @ 6"	#25 @ 12"	#19 @ 12"	#16 @ 12"
17	#19 @ 6"	#19 @ 12"	#22 @ 12"	#16 @ 12"
18	#19 @ 6"	#19 @ 12"	#22 @ 12"	#16 @ 12"
19	#22 @ 6"	#19 @ 12"	#22 @ 12"	#16 @ 12"
20	#22 @ 6"	#22 @ 12"	#25 @ 12"	#16 @ 12"
21	#25 @ 6"	#19 @ 12"	#22 @ 12"	#16 @ 12"
22	#25 @ 6"	#22 @ 12"	#25 @ 12"	#16 @ 12"
23	#29 @ 6"	#19 @ 12"	#25 @ 12"	#16 @ 12"
24	#29 @ 6"	#19 @ 12"	#25 @ 12"	#19 @ 12"
25	#32 @ 6"	#19 @ 12"	#25 @ 12"	#19 @ 12"
26	#32 @ 6"	#19 @ 12"	#25 @ 12"	#19 @ 12"
27	#32 @ 6"	#22 @ 12"	#25 @ 12"	#19 @ 12"
28	#36 @ 6"	#19 @ 12"	#29 @ 12"	#19 @ 12"
29	#36 @ 6"	#19 @ 12"	#29 @ 12"	#19 @ 12"
30	---	---	---	---

NOTES:

FOOTING BAR SIZE, #16 BAR MINIMUM, PER Mn/DOT

① AREA OF STEEL PROVIDED INCLUDES BACK FACE STEM DOWELS, EXCLUDING #16 DOWELS, SEE STEM REINFORCEMENT.

② BASED ON GROSS SOIL LOAD ON HEEL.

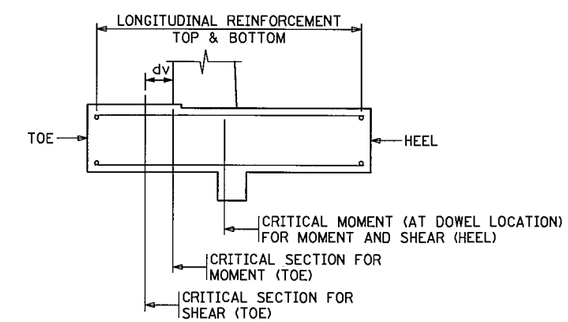

TYPICAL SECTION

S.P. 179-020-031 S.P. 019-605-028

STANDARD SHEET NO. 5-297.629	TITLE: RETAINING WALL SPREAD FOOTING REINFORCEMENT DETAILS
STANDARD APPROVED: MAY 28, 2010	

STATE PROJ. NO. 1901-148 (TH 13) SHEET NO. 340 OF 442 SHEETS

REVISED: 5-28-2010

APPROVED: MAY 31, 2006

STATE BRIDGE ENGINEER

PLOTTED/REVISED: 11-JUN-2012 15:09
DISTRICT #: METRO
USER NAME: s629_1_spn
PATH & FILENAME: Projects/DM_ROS/013/1901/148/Design/StandardPlans/s629/s629_1_spn.dgn
FILE NAME: s629_1_spn

WALL LOADING CASE:
2' - LIVE LOAD SURCHARGE

WALL GEOMETRICS AND DATA - SPREAD FOOTING							QUANTITIES PER FOOT - SPREAD FOOTING					BASE PRESSURE KIPS/SQ. FT.	
							STRUCTURAL CONCRETE		REINFORCEMENT				
STEM HEIGHT h	STEM WIDTH a	TOE WIDTH b	FOOTING THICKNESS c	FOOTING WIDTH d	SHEAR KEY SIZE e	SHEAR KEY LOCATION f	1A43 (CU.YD.) FOOTING	3Y43 (CU.YD.) STEM	PLAIN (POUND)	EPOXY (POUND)	WALL DETAILING SCHEME ①	TOE	HEEL
5	1'-8½"	1'-0"	1'-5"	3'-6"	N/A	N/A	0.187	0.296	15.38	38.16	SHORT	1.670	0.070
6	1'-9"	1'-2"	1'-5"	4'-0"	N/A	N/A	0.211	0.360	16.43	41.74	SHORT	1.820	0.090
7	1'-9½"	1'-4"	1'-5"	4'-6"	N/A	N/A	0.235	0.425	19.70	45.34	SHORT	1.970	0.120
8	1'-10"	1'-6"	1'-5"	5'-0"	N/A	N/A	0.259	0.492	20.75	48.89	SHORT	2.110	0.150
9	1'-10½"	1'-8"	1'-5"	5'-6"	N/A	N/A	0.283	0.561	24.13	52.69	SHORT	2.250	0.180
10	1'-11"	1'-9"	1'-5"	6'-0"	N/A	N/A	0.306	0.631	25.18	62.49	MEDIUM	2.446	0.199
11	1'-11½"	2'-0"	1'-5"	6'-6"	N/A	N/A	0.331	0.703	31.28	66.85	MEDIUM	2.536	0.239
12	2'-0"	2'-3"	1'-5"	6'-9"	1'-0"	3'-10⅝"	0.380	0.776	35.38	72.23	MEDIUM	2.758	0.156
13	2'-0½"	2'-6"	1'-5"	7'-0"	1'-0"	4'-2⅛"	0.393	0.851	40.30	76.82	MEDIUM	2.986	0.013
14	2'-1"	2'-9"	1'-6"	7'-8"	1'-0"	4'-5¾"	0.477	0.928	40.49	81.74	MEDIUM	3.147	0.078
15	2'-1½"	3'-0"	1'-6"	8'-2"	1'-0"	4'-9¼"	0.506	1.006	40.10	99.57	TALL	3.239	0.111
16	2'-2"	3'-3"	1'-9"	8'-8"	1'-0"	5'-0⅞"	0.615	1.085	41.38	105.97	TALL	3.494	0.056
17	2'-2½"	3'-6"	1'-9"	9'-2"	1'-0"	5'-4⅜"	0.649	1.166	49.02	111.90	TALL	3.586	0.089
18	2'-3"	3'-9"	1'-9"	9'-8"	1'-0"	5'-7⅞"	0.682	1.249	50.52	129.74	TALL	3.679	0.121
19	2'-3½"	4'-0"	2'-0"	10'-2"	1'-0"	5'-11½"	0.810	1.333	54.26	137.41	TALL	3.935	0.066
20	2'-4"	4'-3"	2'-0"	10'-8"	1'-0"	6'-3"	0.875	1.417	61.38	165.51	TALL	4.056	0.090
21	2'-4½"	4'-6"	2'-0"	11'-2"	1'-0"	6'-6½"	0.916	1.504	71.34	174.30	TALL	4.151	0.122
22	2'-5"	4'-9"	2'-3"	11'-8"	1'-0"	6'-10⅛"	1.064	1.593	85.93	183.51	TALL	4.407	0.067
23	2'-5½"	5'-0"	2'-6"	12'-2"	1'-4"	7'-1¾"	1.221	1.683	84.82	224.49	TALL	4.663	0.012
24	2'-6"	5'-3"	2'-9"	12'-9"	1'-4"	7'-5⅜"	1.396	1.775	94.03	234.03	TALL	4.872	0.020
25	2'-6½"	5'-6"	2'-9"	13'-3"	1'-6"	7'-8⅞"	1.449	1.868	100.13	288.16	TALL	4.967	0.052
26	2'-7"	5'-10"	3'-0"	13'-9"	1'-6"	8'-1½"	1.631	1.963	102.26	299.67	TALL	5.189	0.000
27	2'-7½"	6'-2"	3'-3"	14'-4"	1'-6"	8'-6⅛"	1.832	2.059	127.34	315.84	TALL	5.364	0.000
28	2'-8"	6'-6"	3'-3"	15'-0"	1'-7"	8'-10⅝"	1.916	2.157	140.92	394.98	TALL	5.334	0.140
29	2'-8½"	6'-10"	3'-6"	15'-6"	1'-7"	9'-3¼"	2.123	2.257	148.00	407.90	TALL	5.558	0.077
30	---	---	---	---	---	---	---	---	---	---	---	---	---

NOTE:
EPOXY REINFORCEMENT QUANTITY ASSUMES AN EXPANSION JOINT IS USED ON BOTH PANEL ENDS. THE QUANTITY MUST BE ADJUSTED WHEN CONSTRUCTION JOINTS ARE USED. QUANTITIES ON THIS SHEET DO NOT INCLUDE RAILING. SEE RAILING SHEETS FOR RAIL REINFORCEMENT (EPOXY) AND RAIL CONCRETE (3Y46).

① SEE STANDARD PLANS 5-297.621 TO .623 FOR REINFORCING DETAILS.

DESIGN CRITERIA

1992 A.A.S.H.T.O. DESIGN SPECIFICATIONS
DESIGN METHOD:
WORKING STRESS - STABILITY, FOUNDATIONS
LOAD FACTOR DESIGN - REINFORCED CONCRETE
f'c = 4,000 PSI
fy = 60,000 PSI

FACTOR OF SAFETY OVERTURNING: 2.0 MINIMUM
FACTOR OF SAFETY SLIDING: 1.5 MINIMUM
LOCATION OF RESULTANT: MIDDLE 1/3 OF FOOTING
NEGLECTING SOIL IN FRONT OF WALL.

SEE FOUNDATION REPORT FOR ALLOWABLE BEARING PRESSURE AND COEFFICIENT OF FRICTION.

BACKFILL CHARACTERISTICS:
INTERNAL ANGLE OF FRICTION: 35°
= 33 PCF EQUIVALENT FLUID PRESSURE ACTIVE STATE
= 53 PCF EQUIVALENT FLUID PRESSURE AT REST STATE
βe = 1.0
COEFFICIENT OF FRICTION: 0.55
UNIT WEIGHT: 125 PCF

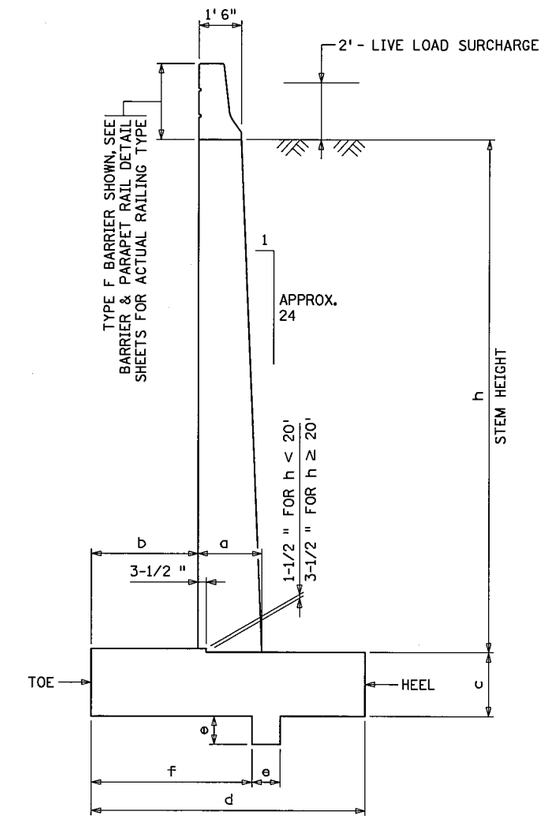

TYPICAL SECTION

S.P. 179-020-031 S.P. 019-605-028

STANDARD SHEET NO.	TITLE:
5-297.632 (1 OF 4)	RETAINING WALL (LIVE LOAD SURCHARGE) SPREAD FOOTING GEOMETRY AND DATA
STANDARD APPROVED: MAY 28, 2010	

STATE PROJ. NO. 1901-148 (TH 13) SHEET NO. 341 OF 442 SHEETS

REVISED: 5-28-2010
APPROVED: MAY 31, 2006
STATE BRIDGE ENGINEER

PLOTTED/REVISED: 11-JUN-2012 15:10
DISTRICT #: METRO
USER NAME: s632_l_spn
PATH & FILENAME: Projects/DM_ROS/013/1901/148/Design/StandardPlans/s632_l_spn.dgn
FILE NAME: s632_l_spn

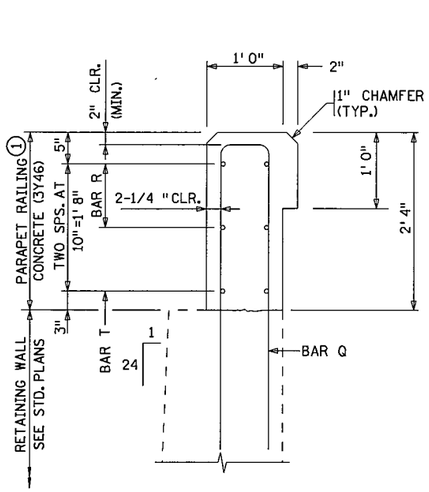

SECTION A-A

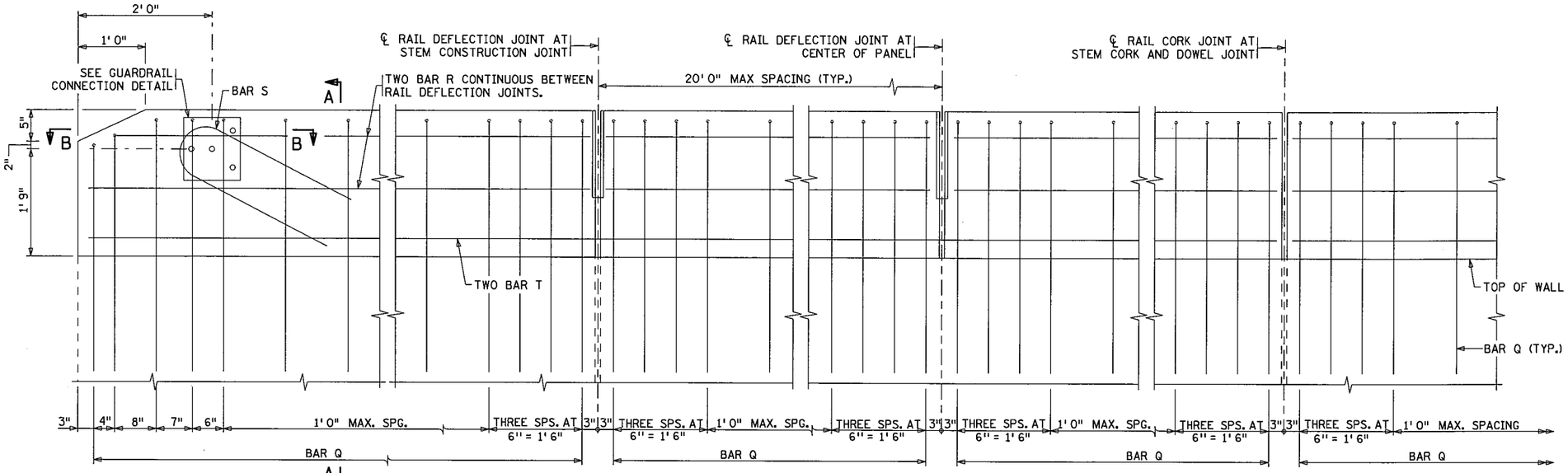

INSIDE ELEVATION OF RAILING

RAIL MEETS TEST LEVEL 2 REQUIREMENTS OF NCHRP REPORT 350

WHEN THE RAIL WILL BE USED NEXT TO A WALKWAY, A TEST LEVEL 4 BARRIER MUST BE USED TO SEPARATE TRAFFIC FROM THIS RAIL IN THE 45 MPH (OR OVER) SPEED ZONE.

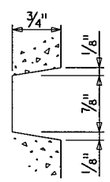

RAIL RUSTICATION

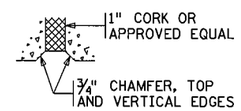

SECTION C-C

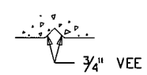

SECTION D-D

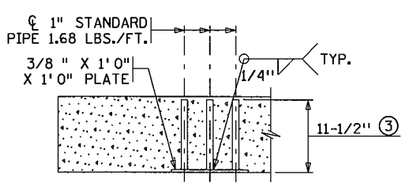

SECTION B-B

(REINFORCEMENT NOT SHOWN)

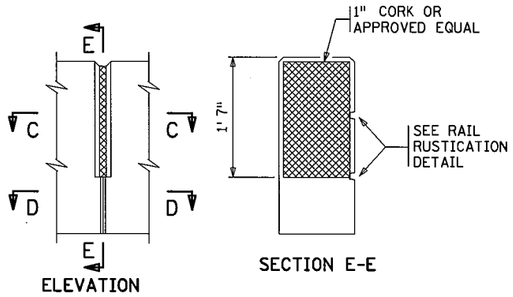

ELEVATION

SECTION E-E

DEFLECTION JOINT DETAILS

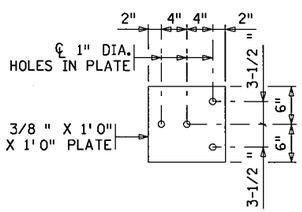

GUARDRAIL CONNECTION DETAIL

GALVANIZE AFTER FABRICATION PER SPEC. 3394. ESTIMATED WEIGHT = 22 LBS

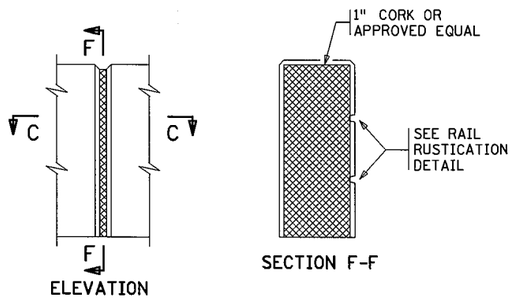

ELEVATION

SECTION F-F

RAIL CORK JOINT

MATCH RAIL CORK JOINTS WITH RETAINING WALL STEM CORK AND DOWEL JOINTS. CORK AND DOWEL JOINTS ARE TO BE SPACED AT 91' 6" MAXIMUM.

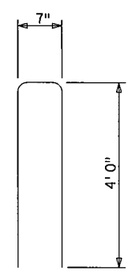

BAR Q

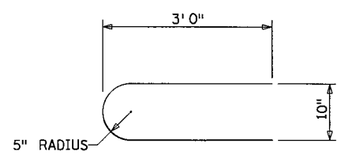

BAR S

NOTES:

BARS MARKED WITH THE SUFFIX "E" SHALL BE EPOXY COATED IN ACCORDANCE WITH SPEC. 3301.

THE GUARDRAIL CONNECTION IS INCLUDED IN THE PRICE BID FOR PARAPET RAIL CONCRETE (3Y46).

MAXIMUM SPACING OF RAIL DEFLECTION JOINTS SHALL BE 20' 0".

GUARDRAIL CONNECTION SHALL BE STRUCTURAL STEEL, SPEC. 3306 AND GALVANIZED AFTER FABRICATION PER SPEC. 3394.

FOR TYPICAL RETAINING WALL REINFORCEMENT AND DETAILS, SEE STANDARD RETAINING WALL SHEETS.

CONCRETE RAILING: 350 LBS/FT
0.086 CU YD/FT

CONCRETE PARAPET RAILING SHALL BE PAID FOR ON A LINEAL FOOT BASIS.

① REBAR AND CONCRETE IS INCLUDED IN THE PAY ITEM BY LINEAR FEET FOR THE PARAPET BARRIER.

② REINFORCEMENT SHOWN ASSUMES RAIL DEFLECTION JOINT LOCATED IN CENTER OF PANEL.

③ DIMENSION INCLUDES 3/8 " PLATE.

BILL OF REINFORCEMENT

TYPICAL RAILING ON RETAINING WALL ②
30' 6" PANEL LENGTH, PANELS:_____

BAR	MARK	NO.	LENGTH	SHAPE	LOCATION
R	R1601E	8	14' 11"	STR.	RAILING - HORIZONTAL
T	R1602E	2	30' 2"	STR.	RAILING - HORIZONTAL
PARAPET RAIL CONC. (3Y46)				REINFORCEMENT BARS (EPOXY)	
2.6 CU YD ①				188 POUND ①	

30' 6" PANEL LENGTH ②
WITH GUARDRAIL CONNECTION

BAR	MARK	NO.	LENGTH	SHAPE	LOCATION
Q	S1609E	1	8' 7"	BENT	RAILING - VERTICAL
R	R1601E	8	14' 11"	STR.	RAILING - HORIZONTAL
S	R2202E	1	6' 6"	BENT	RAILING - VERTICAL
T	R1603E	2	30' 2"	STR.	RAILING - HORIZONTAL
PARAPET RAIL CONC. (3Y46)				REINFORCEMENT BARS (EPOXY)	
2.6 CU YD ①				210 POUND ①	

TYPICAL RAILING ON RETAINING WALL
_____ PANEL LENGTH, PANEL: _____

BAR	MARK	NO.	LENGTH	SHAPE	LOCATION
R	R1601E			STR.	RAILING - HORIZONTAL
T	R1602E			STR.	RAILING - HORIZONTAL
PARAPET RAIL CONC. (3Y46)				REINFORCEMENT BARS (EPOXY)	
__ CU YD ①				__ POUND ①	

S.P. 179-020-031 S.P. 019-605-028

REVISED: 5-28-2010

APPROVED: MAY 31, 2006

STATE BRIDGE ENGINEER

STANDARD SHEET NO. 5-297.633

STANDARD APPROVED: MAY 28, 2010

TITLE: RETAINING WALL CONCRETE PARAPET BARRIER

STATE PROJ. NO. 1901-148 (TH 13) SHEET NO. 342 OF 442 SHEETS

PLOTTED/REVISED: 11-JUN-2012 15:11
DISTRICT #: METRO
USER NAME: s633_J_spn
PATH & FILENAME: Projects/DM_ROS/013/190/148/Design/StandardPlans/s633_J_spndgn
FILE NAME: s633_J_spn

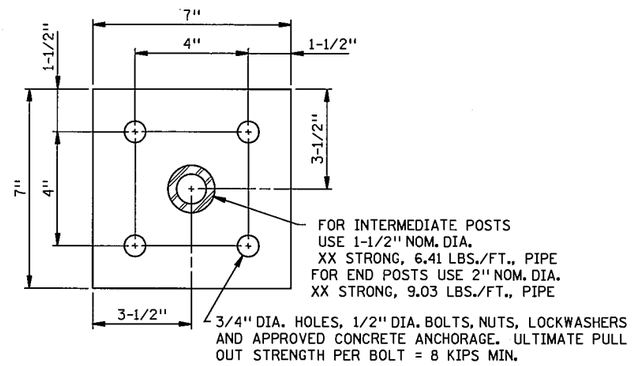

PLAN VIEW

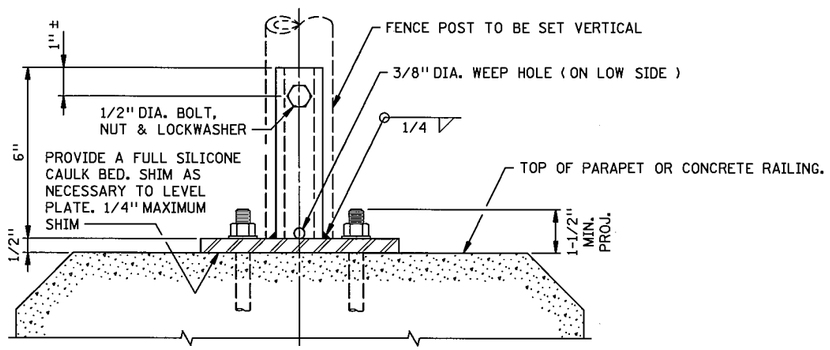

TYPICAL SECTION

STEEL FENCE POST ANCHORAGE DETAIL ① ②

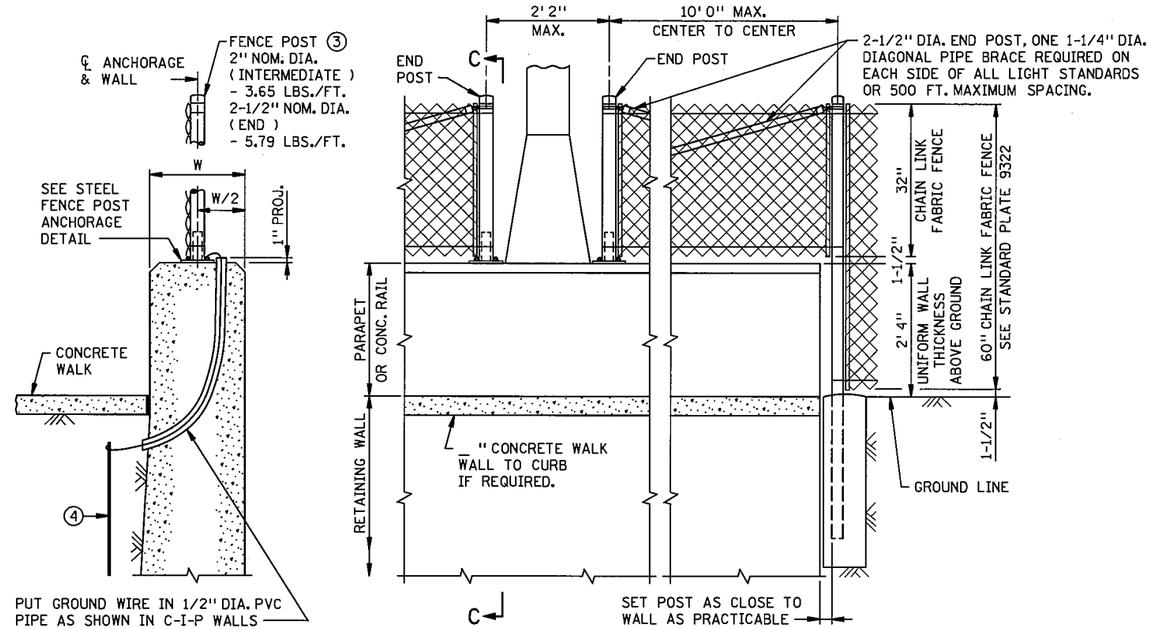

SECTION C-C

ELEVATION

CHAIN LINK FENCE ON RETAINING WALL WITH PARAPET

NOTES:

① ℄ OF ANCHORAGE SHALL BE 6" MIN. FROM DEFLECTION JOINTS.

② ESTIMATED WEIGHT = 10 OR 12 LBS.
STRUCT. STEEL PER SPEC. 3306 - STRUCT. PIPE PER SPEC. 3362.
GALVANIZE THE FENCE POST ANCHORAGE AFTER FABRICATION
PER SPEC. 3394. GALVANIZE THE FASTENERS PER SPEC. 3392.

③ INSTALL FENCE PER SPEC. 2557.

④ PROVIDE ELECTRICAL GROUNDS FOR FENCING PER SPEC. 2557
AND AS MODIFIED BELOW:
a. WALLS WITHOUT SIDEWALKS ADJACENT TO WALL; INSTALL
PER SPEC. 2557.
b. WALLS WITH SIDEWALKS ADJACENT TO WALL; PLACE
GROUNDING RODS BELOW SIDEWALK ELEVATION. LOCATE
CONNECTING WIRE (FROM FENCE TO GROUND ROD) DOWN THRU
WALL TO BELOW SIDEWALK ELEVATION AND THEN OUT TO ROD.
c. GROUNDING SHALL NOT BE CONNECTED TO THE LIGHTING
SYSTEM WHEN LIGHTING IS REQUIRED ON THE WALL.
USE EITHER "a" OR "b" ABOVE.

S.P. 179-020-031 S.P. 019-605-028

STANDARD SHEET NO. 5-297.636	TITLE: ANCHORAGE & CHAIN LINK FENCE FOR RETAINING WALLS
STANDARD APPROVED: SEPTEMBER 18, 1995	

REVISION DATE 7-30-96

STATE PROJ. NO. 1901-148 (TH 13) SHEET NO. 343 OF 442 SHEETS

PLOTTED/REVISED: 30-JUL-2012 10:53
DISTRICT #: METRO
USER NAME: s636_l_spn
PATH & FILENAME: Projects/DM_ROS/013/1901/148/Design/StandardPlans/s636_l_spn.dgn
FILE NAME: s636_l_spn

PLOTTED/REVISED: 14-JUN-2012 14:55
DISTRICT #: METRO
IPLOT NAME: spl901-148_rwall aes
PATH & FILENAME: Projects/DM_ROS/013/1901/148/Design/Walls/AESTHETICS/spl901-148_rwall aes.dgn

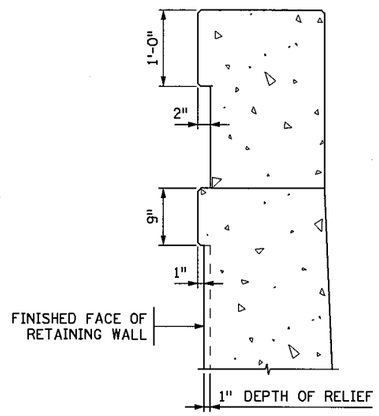

SECTION A-A

PARAPET AND RETAINING WALL

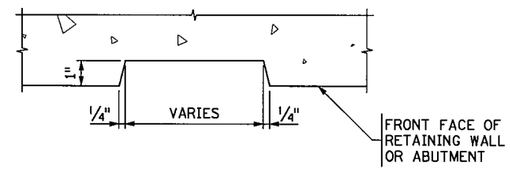

DETAIL 1

RANDOM BATTEN REVEAL

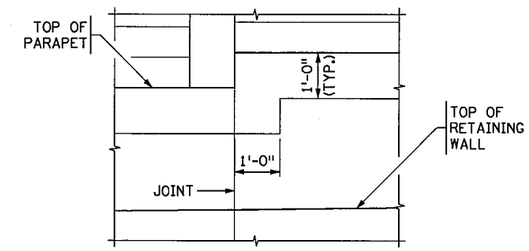

DETAIL 2

COPING HEIGHT TRANSITION

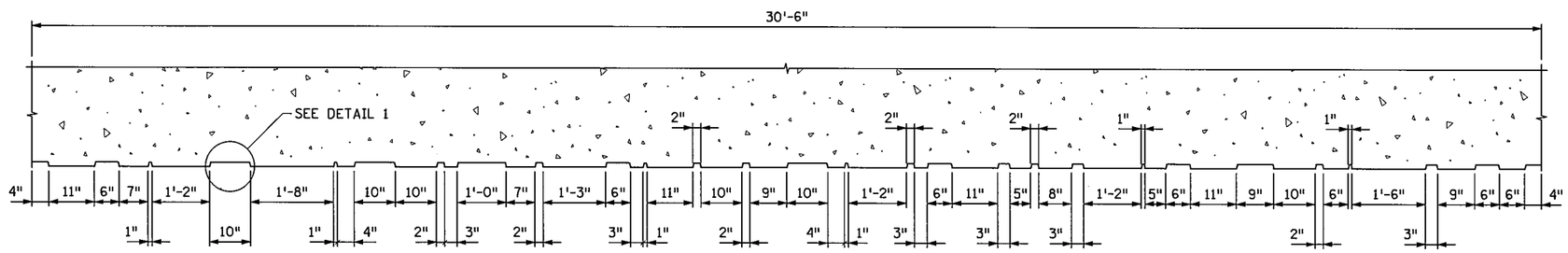

SECTION B-B

ARCHITECTURAL CONCRETE TEXTURE
(RANDOM BATTEN)

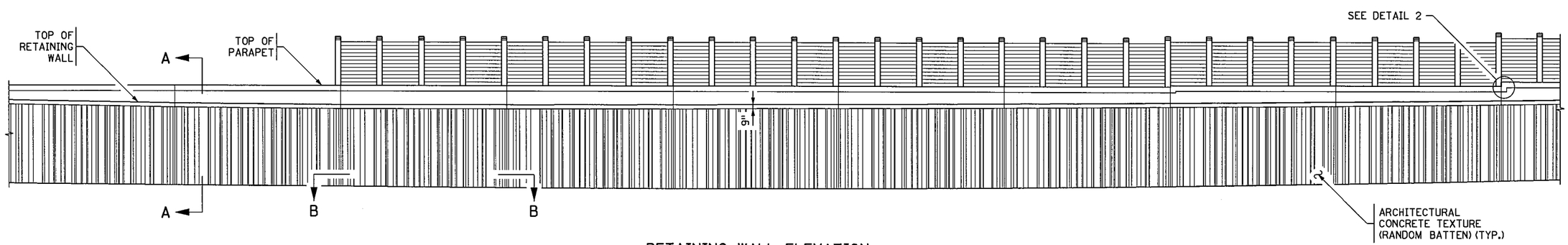

RETAINING WALL ELEVATION

NOTES:

UNLESS OTHERWISE NOTED, PROVIDE A 1/2" CHAMFER ON ALL HORIZONTAL OR VERTICAL CORNERS / EDGES OF 90° OR LESS.

DIMENSIONS SHOWN ARE RECOMMENDED ONLY - FOR CHANGES OR REVISIONS CONSULT BRIDGE ARCHITECTURAL SPECIALIST.

RETAINING WALL AESTHETICS

S.P. 179-020-031 S.P. 019-605-028

RETAINING WALL DETAILS

DRAWN BY: CT	CHECKED BY: HS	CERTIFIED BY LICENSED PROFESSIONAL ENGINEER LIC. NO. 18520 DATE 6/18/12	STATE PROJ. NO. 1901-148 (T.H. 13)	SHEET NO. 344 OF 442 SHEETS

RETAINING WALLS 1, 2, 4 - 6

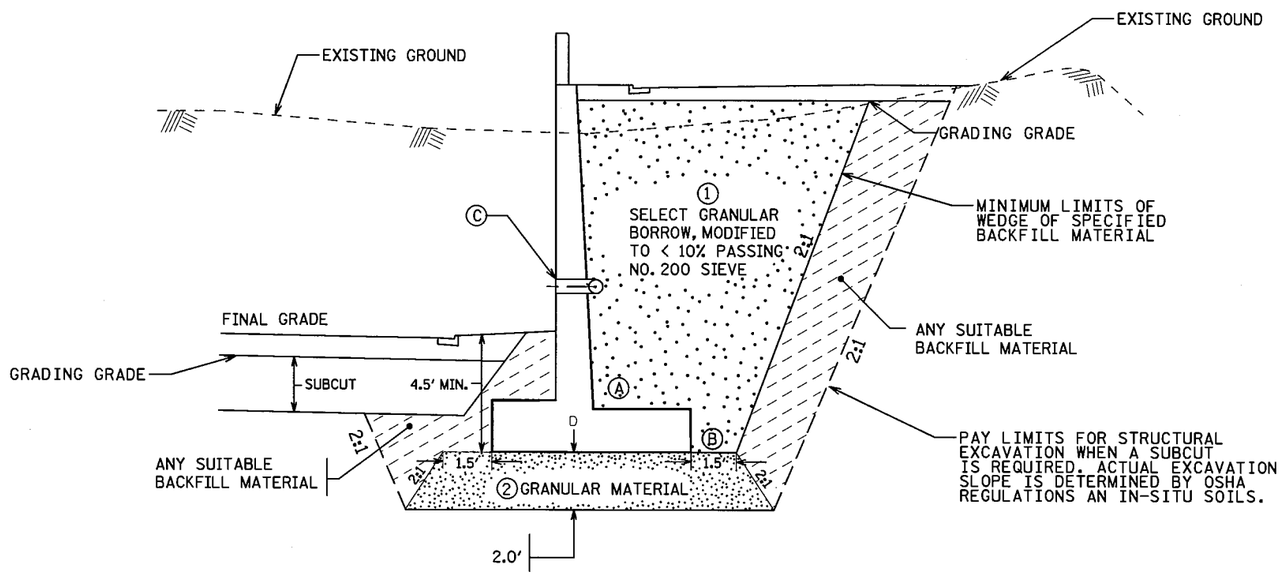

NOT TO SCALE

All slope dimensions shown as V:H

DRAINAGE SYSTEM NOTES:

PROVIDE WALL DRAINAGE SYSTEM A, B OR C

Ⓐ Ⓑ PLACE A 4" PERFORATED PIPE(Mn/DOT SPEC. 3245) WRAPPED WITH A TYPE I GEOTEXTILE FABRIC (Mn/DOT SPEC. 3733) RUNNING THE ENTIRE LENGTH OF THE WALL AND LAID A MINIMUM OF 2 IN. ABOVE THE TOP OF FOOTING (OPTION A) OR BOTTOM ELEVATION OF THE FOOTING (OPTION B). STRUCTURAL BACKFILL MATERIALS SHALL COMPLETELY SURROUND THE PIPE. AT ALL TIMES, THE SLOPE OF THE PIPE SHALL BE CHECKED TO ENSURE POSITIVE DRAINAGE. FREQUENT TIES (SPACED APPROXIMATELY 200 FT. APART) SHALL BE MADE FROM THE PIPE TO THE INPLACE OR PROPOSED DRAINAGE SYSTEM.

Ⓒ PROVIDE WEEP HOLES AS SPECFIED IN THE BRIDGE STANDARD PLANS MANUAL, STANDARD SHEET 5-297.621 TO 5-297.623.

EXCAVATION AND BACKFILL NOTES:

① Mn/DOT SPEC. 3149.2B2 MODIFIED TO 10% PASSING THE NO. 200 SIEVE COMPACT BACKFILL TO SPECIFIED DENSITY METHOD Mn/DOT SPEC. 2105.3F1

② IF SUBCUT IS REQUIRED, BACKFILL WITH GRANULAR EMBANKMENT, Mn/DOT SPEC. 3149.2B1. COMPACT BACKFILL TO 100% OF STANDARD PROCTOR (T-99). REFER TO FOUNDATION RECOMMENDATION LETTER FOR SUBCUT DEPTHS.

S.P. 179-020-031 S.P. 019-605-028

RETAINING WALL SUBCUT DETAILS

DRAWN BY: CT	CHECKED BY: HS	CERTIFIED BY LICENSED PROFESSIONAL ENGINEER LIC. NO. 18520 DATE 6/18/12	STATE PROJ. NO. 1901-148 (T.H. 13) SHEET NO. 345 OF 442 SHEETS

DISTRICT #: METRO
IPLOT NAME: Diagram F-1 October 2005
PATH & FILENAME: Projects/DM_ROS/013/1901/148/Design/Walls/Diagram F-1 October 2005.dgn
PLOTTED/REVISED: 11-JUN-2012 15:28

GENERAL NOTES:

UTILITIES:

EXISTING AND PROPOSED UTILITIES ARE SHOWN IN THE GRADING PLANS. THE CONTRACTOR SHALL VERIFY THE LOCATION OF EXISTING FACILITIES AND SHALL EXERCISE CARE IN ADJACENT CONSTRUCTION.

EXCAVATION AND EARTHWORK:

ALL EXCAVATION AND EMBANKMENT WORK SHALL CONFORM TO Mn/DOT 2451.

CAST-IN-PLACE CONCRETE:

ALL CONCRETE SHALL CONFORM TO Mn/DOT 2461, EXCEPT AS NOTED.

CONSTRUCTION:

CONSTRUCTION SHALL BE IN ACCORDANCE WITH Mn/DOT 2411, EXCEPT AS NOTED.

GEOMETRICS AND GRADES:

DATA FOR BASELINE GEOMETRY IS TABULATED FOR WALL ALIGNMENT, SEE LAYOUT SHEETS. WALL ALIGNMENT REFERENCE IS ALONG FRONT FACE OF WALL.

COMPACTION REQUIREMENTS:

COMPACT STRUCTURAL BACKFILL IN ACCORDANCE WITH Mn/DOT SPEC. 2105.3F1 UNLESS RECOMMENDED OTHERWISE BY THE SOILS ENGINEER.

COMPACT GRANULAR BEDDING IN ACCORDANCE WITH Mn/DOT SPEC. 2105.3F1 UNLESS RECOMMENDED OTHERWISE BY THE SOILS ENGINEER.

ARCHITECTURAL DETAILS:

ACHIEVE ARCHITECTURAL CONCRETE TEXTURE (RANDOM BATTEN) USING RUSTICATION STRIPS OR FORM LINER FOR CONCRETE CONSTRUCTION (SEE SPECIAL PROVISIONS).

USE FORM LINERS WITH 1" MAXIMUM RELIEF OR MAXIMUM 1" THICK BATTENS UNLESS ADDITIONAL CONCRETE THICKNEESS IS PROVIDED IN THE PANEL TO MAINTAIN REQUIRED CLEARANCE TO REINFORCEMENT.

ARRANGE PATTERNS TO ACHIEVE A DESIGN CONSISTING OF AN "A","B" AND "C" PANEL LAYOUT. SUBMIT PROPOSED LAYOUT FOR REVIEW/APPROVAL PRIOR TO CONSTRUCTION FOR ALL SURFACES DESIGNATED TO RECEIVE ARCHITECTURAL TEXTURE (RANDOM BATTEN).

NOTES TO CONTRACTOR:

THE PREQUALIFIED WETCAST PREFABRICATED MODULAR BLOCK WALL LIST AS PER THE SPECIAL PROVISIONS

PROVIDE DETAILED DRAWINGS FOR CONSTRUCTION CONTAINING:

- SUBMIT DETAILED DRAWINGS TO Mn/DOT PROJECT ENGINEER.
- ELEVATION VIEW WITH WALL FACING LAYOUT AND GEOMETRIC INFORMATION.
- PLAN VIEW WITH BOTTOM AND TOP OF WALL ALIGNMENT, AND PLAN LIMITS OF WALL ALIGNMENT.
- CROSS SECTIONS DETAILING BATTER, VERTICAL SPACING, SUBSURFACE DRAINAGE, SURFACE DRAINAGE, AND WATER RUNOFF COLLECTION ABOVE WALL.
- DETAILS FOR SWALE DRAINAGE SYSTEM.
- NOTE BLOCK AND FILL PLACEMENT METHODS AND REQUIREMENTS.
- DETAIL ALL WALL FILL PENETRATIONS AND WALL FACE PENETRATIONS. DETAIL WALL FACING UNIT PLACEMENT AROUND PENETRATIONS.
- DETAILS THAT ARE SPECIFIC TO VENDOR PRODUCTS AND THEIR INTERACTION WITH OTHER PROJECT COMPONENTS.
- DETAILS OF CAP UNITS AND INSTALLATION/FASTENING INSTRUCTIONS FOR THE CAPS.
- A COPY OF Mn/DOT PREQUALIFICATION LETTER FOR THE WALL SYSTEM.
- CERTIFICATION BY PROFESSIONAL ENGINEER THAT THE CONSTRUCTION LAYOUT MEETS THE REQUIREMENTS OF PLANS AND Mn/DOT PMGBW REQUIREMENTS.
- WIDTH OF THE BLOCK IS MEASURED FROM FRONT TO BACK FACE OF BLOCK UNIT.

DESIGN CRITERIA

DESIGN SHALL COMPLY WITH MnDOT LRFD BRIDGE DESIGN MANUAL AND THE CURRENT AASHTO LRFD BRIDGE DESIGN SPECIFICATIONS.

A. THE LATERAL EARTH PRESSURE COMPUTATION FOR EXTERNAL STABILITY CALCULATIONS USES AN INTERFACE ANGLE SET EQUAL TO THE RETAINED BACKFILL ANGLE.
B. THE LATERAL EARTH PRESSURE COMPUTATION FOR INTERNAL STABILITY CALCULATIONS INCORPORATES THE EFFECTS OF WALL FACE BATTER.

BEARING:
A. SEE FOUNDATION REPORT FOR FACTORED OR NOMINAL SOIL BEARING RESISTANCE.

STRUCTURAL BACKFILL CHARACTERISTICS:

A. SEE SPECIAL PROVISION 2411.
B. INTERNAL ANGLE OF FRICTION (Φ_r) = 34°
C. COHESION (C) = 0
D. MOIST UNIT WEIGHT (γ_r) = 120 PSF

COARSE FILTER AGGREGATE CHARACTERISTICS:
A. COARSE FILTER AGGREGATE TO MEET SPEC. 3149.2H. INCIDENTAL, NO DIRECT PAYMENT WILL BE MADE.

DISTRICT #: METRO
IPLOT NAME: d1901148_retwall
PATH & FILENAME: Projects/DM_ROS/013/1901/148/Design/Walls/d1901148_retwall.dgn
PLOTTED/REVISED: 12-JUN-2012 14:47

I HEREBY CERTIFY THAT SHEETS 346 TO 347 HAVE BEEN PREPARED BY ME OR UNDER MY DIRECT SUPERVISION AND I AM A DULY LICENSED PROFESSIONAL ENGINEER UNDER THE LAWS OF THE STATE OF MINNESOTA.

Khalid M. Obeidat
KHALID OBEIDAT
DATE 6/18/12 LIC. NO. 41868

S.P. 179-020-031 S.P. 019-605-028 SHEET 1 OF 2

MODULAR GRAVITY BLOCK RETAINING WALL NOTES

STATE PROJ. NO. 1901-148 (TH 13) SHEET NO. 346 OF 442 SHEETS

TYPICAL WALL SECTION

NOT TO SCALE

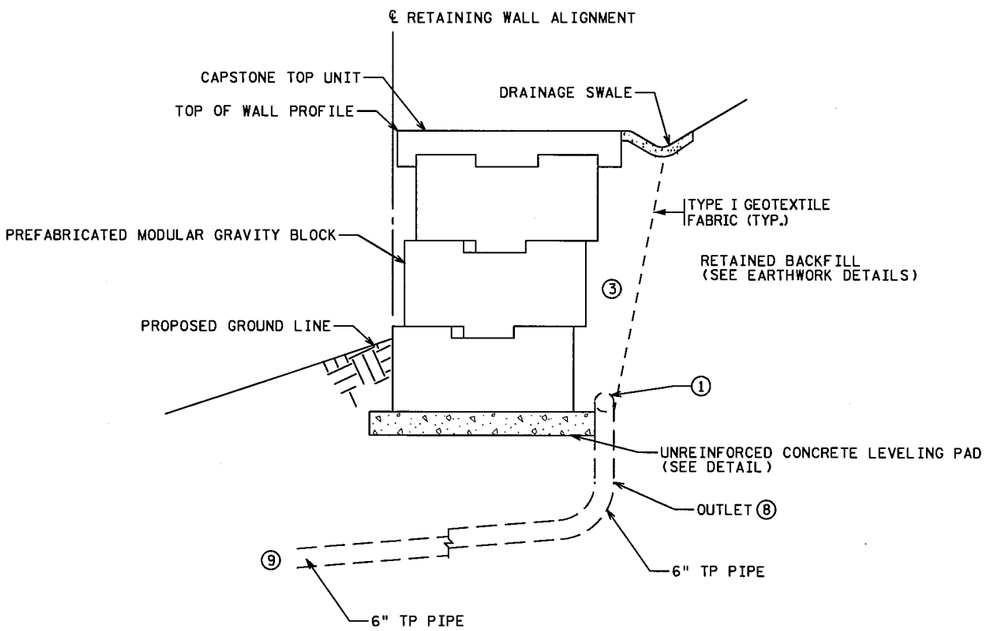

BLOCK WALL EARTHWORK DETAILS

NOT TO SCALE

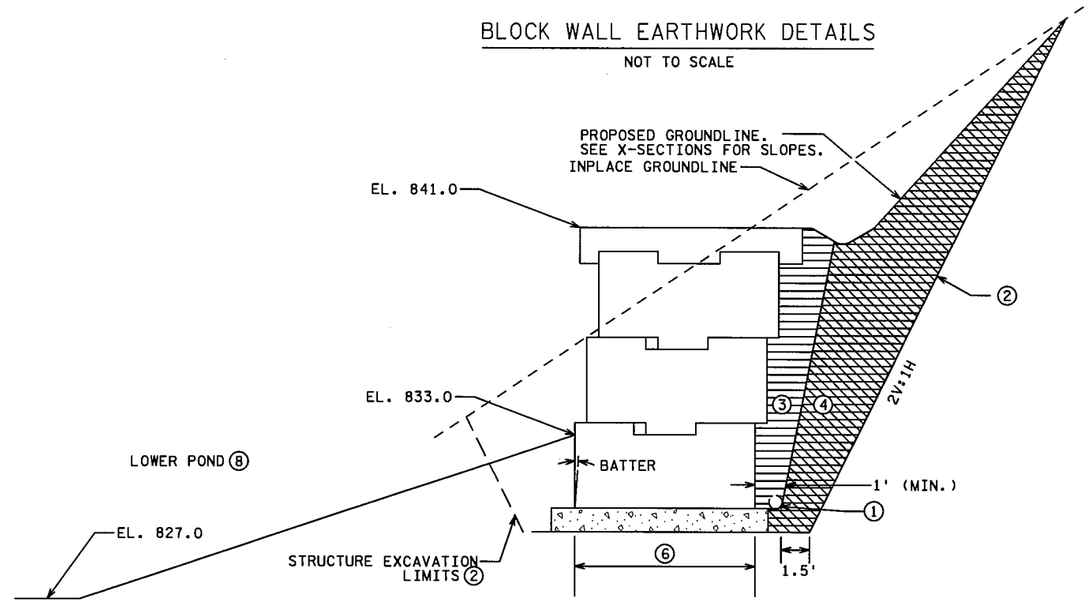

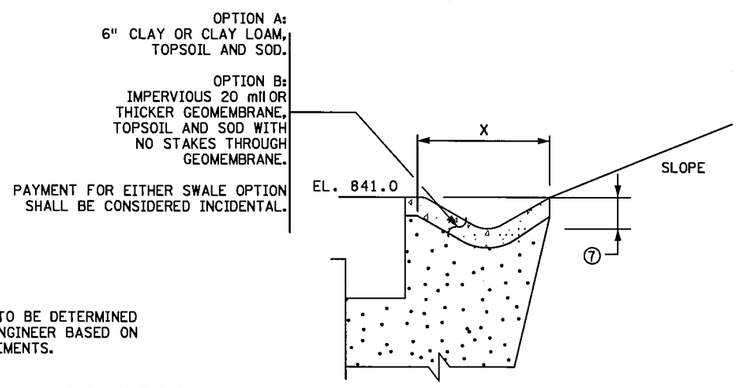

NOTES:

DIMENSIONS TO BE DETERMINED BY DESIGN ENGINEER BASED ON SITE REQUIREMENTS.
X = 3'

INDEPENDANT DRAINS FOR SWALE SHALL BE PROVIDED FOR SWALE LONGER THAN 100'. DRAIN SHALL CONNECT TO A DRAINAGE STRUCTURE. IT IS THE CONTRACTOR'S RESPONSIBILITY TO PROVIDE DETAILS OF DRAIN DESIGN.

TYPICAL DRAIN SWALE DETAIL

USE OPTION A

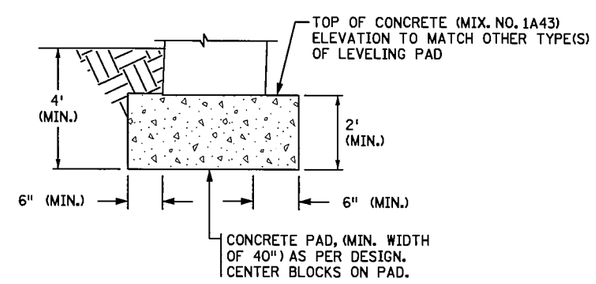

CONCRETE LEVELING PAD

NOT TO SCALE

NOTES:

① 6" THERMOPLASTIC PERFORATED PIPE, SPEC. 3245, WRAP WITH TYPE I GEOTEXTILE, SPEC. 3733 (TYP.) INSTALLATION AS PER SPEC. 2502. PLACE AT MIN. 0.3% SLOPE.

② PAY LIMITS FOR STRUCTURE EXCAVATION CLASS U. ADDITIONAL EXCAVATION OR TEMPORARY SHORING NEEDED FOR SAFETY REQUIREMENTS TO BE DETERMINED BY THE CONTRACTOR AND SHALL BE CONSIDERED INCIDENTAL.

③ COARSE FILTER AGGREGATE

④ STRUCTURAL BACKFILL - SELECT GRANULAR MATERIAL MODIFIED 10%, Mn/DOT SPEC. 3149.2.B2

⑤ DELETED

⑥ FOR PURPOSES OF EARTHWORK TABULATION, THIS DIMENSION HAS BEEN ASSUMED AT 4' FOR ALL BLOCKS, WITH A 0° BATTER. CONSTRUCTED DIMENSION AND BATTER MAY VARY.

⑦ VAR DEPTH TO DRAIN. RWALL8 WILL NOT HAVE A SWALE.

⑧ OUTLET TO BE DETERMINED IN THE FIELD.

⑨ PRECAST CONCRETE HEADWALL WITH RODENT SCREEN AT OUTLET POINT ON SLOPE. SEE STANDARD PLATE 3131 FOR DETAILS.

S.P. 179-020-031 S.P. 019-605-028 SHEET 2 OF 2

MODULAR GRAVITY BLOCK RETAINING WALL DETAILS

DRAWN BY: MRS	CHECKED BY: HS	CERTIFIED BY Khalid M Obeidat LICENSED PROFESSIONAL ENGINEER LIC. NO. 41868 DATE 6/18/12	STATE PROJ. NO. 1901-148 (T.H. 13) SHEET NO. 347 OF 442 SHEETS

PLOTTED/REVISED: 13-JUN-2012 09:06
DISTRICT: METRO
PLOT NAME: d1901148_retwall
FILENAME: Projects/DM_ROS/013/1901/148/Design/Walls/d1901148_retwall.dgn

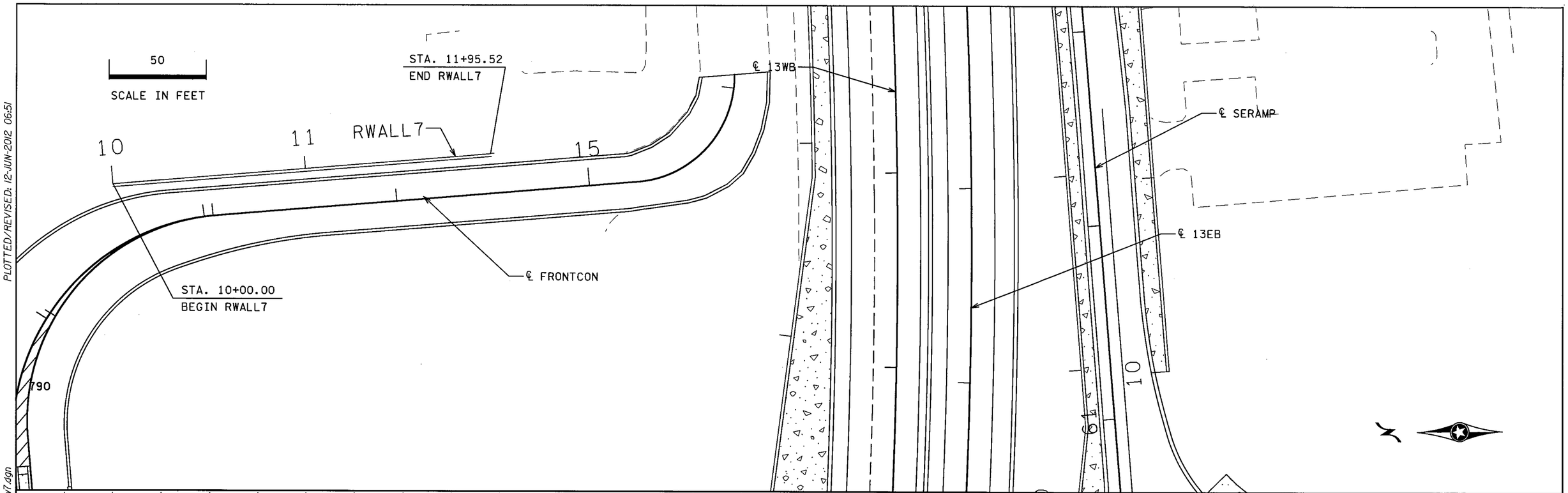

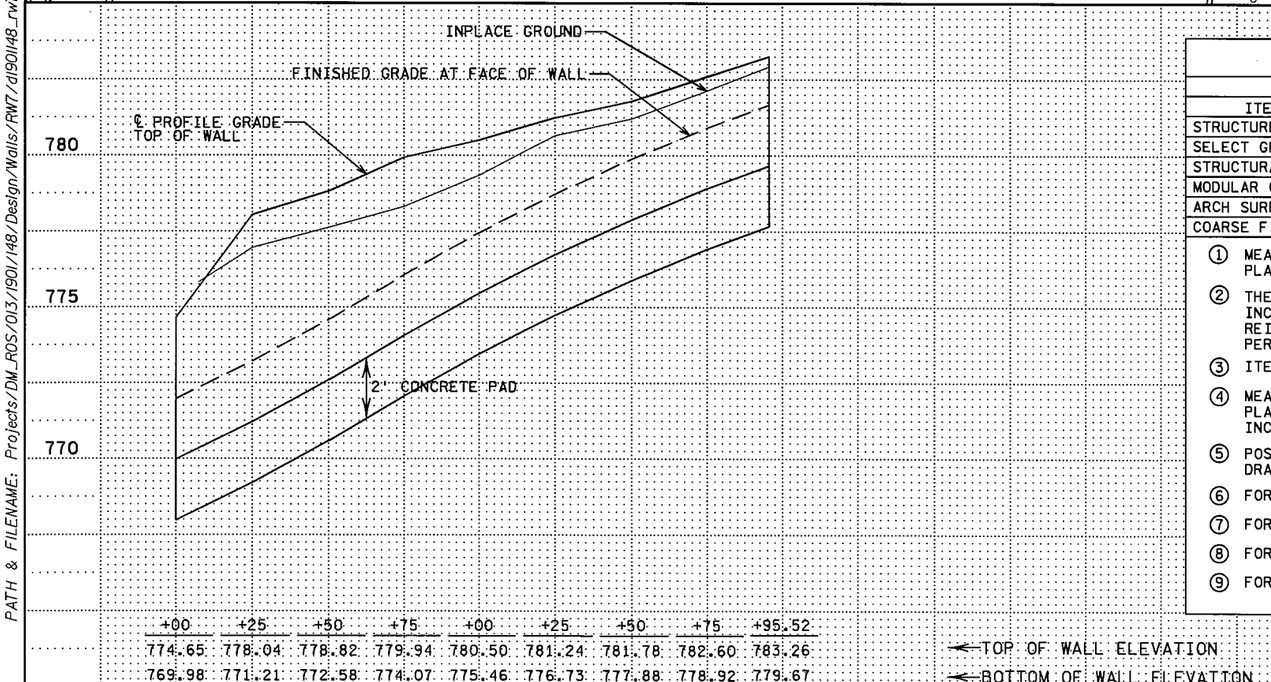

MODULAR GRAVITY BLOCK WALLS

AA

ITEM			QUANTITIES RWALL7 (7)	RWALL8 (8)	RWALL9 (9)	TOTAL
STRUCTURE EXCAVATION CLASS U		CU YD	190.5	66.6	98.6	355.7
SELECT GRANULAR EMBANKMENT MOD. 10% (CV)	(3)	CU YD	118.6	25.4	58.5	202.2
STRUCTURAL CONCRETE (1A43)	(6)	CU YD	43.2	23.2	20.2	86.6
MODULAR GRAVVITY BLOCK RETAINING WALL (1) (2) (5)	(6)	SQ FT	695.7	404.1	483.6	1583.4
ARCH SURFACE FINISH (SINGLE COLOR) (4)	(6)	SQ FT	1482.3	825.3	851.0	1824.6
COARSE FILTER AGGREGATE (CV)	(6)	CU YD	45.9	21.3	22.2	89.4

(1) MEASUREMENT BASED ON VERTICAL FACE AREA OF MODULAR GRAVITY BLOCK AS MEASURED FROM PLAN TOP OF WALL TO 2 FT. BELOW FINISHED GRADE AT BOTTOM OF WALL.

(2) THE FOLLOWING WORK ASSOCIATED WITH CONSTRUCTION OF THE MODULAR GRAVITY BLOCK WALL IS INCLUDED IN THIS ITEM: CONCRETE MODULAR BLOCKS, CAP UNIT, GEOSYNTHETIC REINFORCEMENT, PIPE DRAIN OUTLETS, GEOTEXTILE AROUND PERF. PIPE DRAINS AND GEOTEXTILE FABRIC TYPE I, SPEC. 3733.

(3) ITEM USED FOR REINFORCED WALL FILL.

(4) MEASUREMENT BASED ON VERTICAL FACE AREA OF MODULAR GRAVITY BLOCK AS MEASURED FROM PLAN TOP OF WALL TO 2 FT. BELOW FINISHED GRADE AT BOTTOM OF WALL. AREA ALSO INCLUDES CAP UNIT AND BACKSIDE OF TOP THREE BLOCK COURSES.

(5) POSITION 4" PERF TP PIPE ALONG THE BASE OF THE WALL EXCAVATION TO MAXIMIZE DRAINAGE AT THE BASE OF THE WALL.

(6) FOR DETAILS, SEE SHEET NO. 347.

(7) FOR DETAILS, SEE THIS SHEET. INTERCHANGE QUANTITIES

(8) FOR DETAILS, SEE SHEET NO. 351. S.P. 179-020-031 QUANTITIES

(9) FOR DETAILS, SEE SHEET NO. 353. INTERCHANGE QUANTITIES

S.P. 179-020-031 S.P. 019-605-028

RWALL7 PLAN, PROFILE AND TAB

DRAWN BY: GJ | CHECKED BY: HS | CERTIFIED BY _____ LICENSED PROFESSIONAL ENGINEER LIC. NO. 18520 DATE 6/18/12

STATE PROJ. NO. 1901-148 (T.H. 13) SHEET NO. 348 OF 442 SHEETS

PLOTTED/REVISED: 12-JUN-2012 06:51
DISTRICT #: METRO
IPLOT NAME: d1901148_rw7
PATH & FILENAME: Projects/DM_ROS/013/1901/148/Design/Walls/RW7/d1901148_rw7.dgn

EXCAVATION CU.YD.	EMBANKMENT CU.YD.

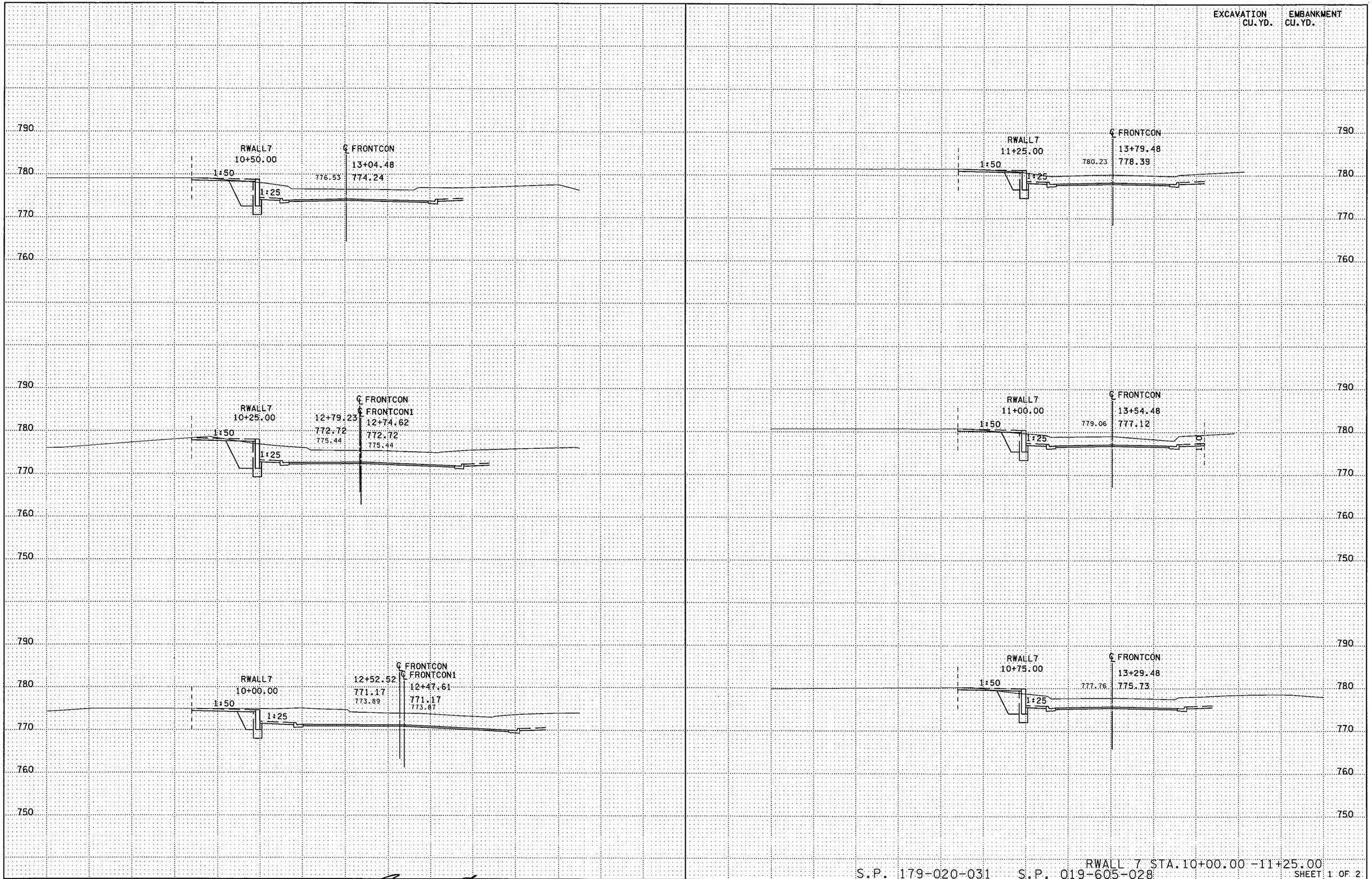

S.P. 179-020-031 S.P. 019-605-028

RWALL 7 STA.10+00.00 -11+25.00

SHEET 1 OF 2

DRAWN BY: MRS	CHECKED BY: HS	CERTIFIED BY LICENSED PROFESSIONAL ENGINEER	LIC. NO. 18520 DATE 6/18/12	STATE PROJ. NO. 1901-148 (TH 13) SHEET NO. 349 OF 442 SHEETS

DISTRICT *: METRO
IPLOT NAME: d190148_rwall7_xpl
PATH & FILENAME: Projects/DM_ROS/013/190148/Design/Walls/RW7/d190148_rwall7_xpl.dgn
PLOTTED/REVISED: 11-JUN-2012 16:09

DISTRICT # : METRO
IPLOT NAME: d190148_rwall7_xpl
PATH & FILENAME: Projects/DM_ROS/013/190148/Design/Walls/RW7/d190148_rwall7_xpl.dgn
PLOTTED/REVISED: 11-JUN-2012 16:09

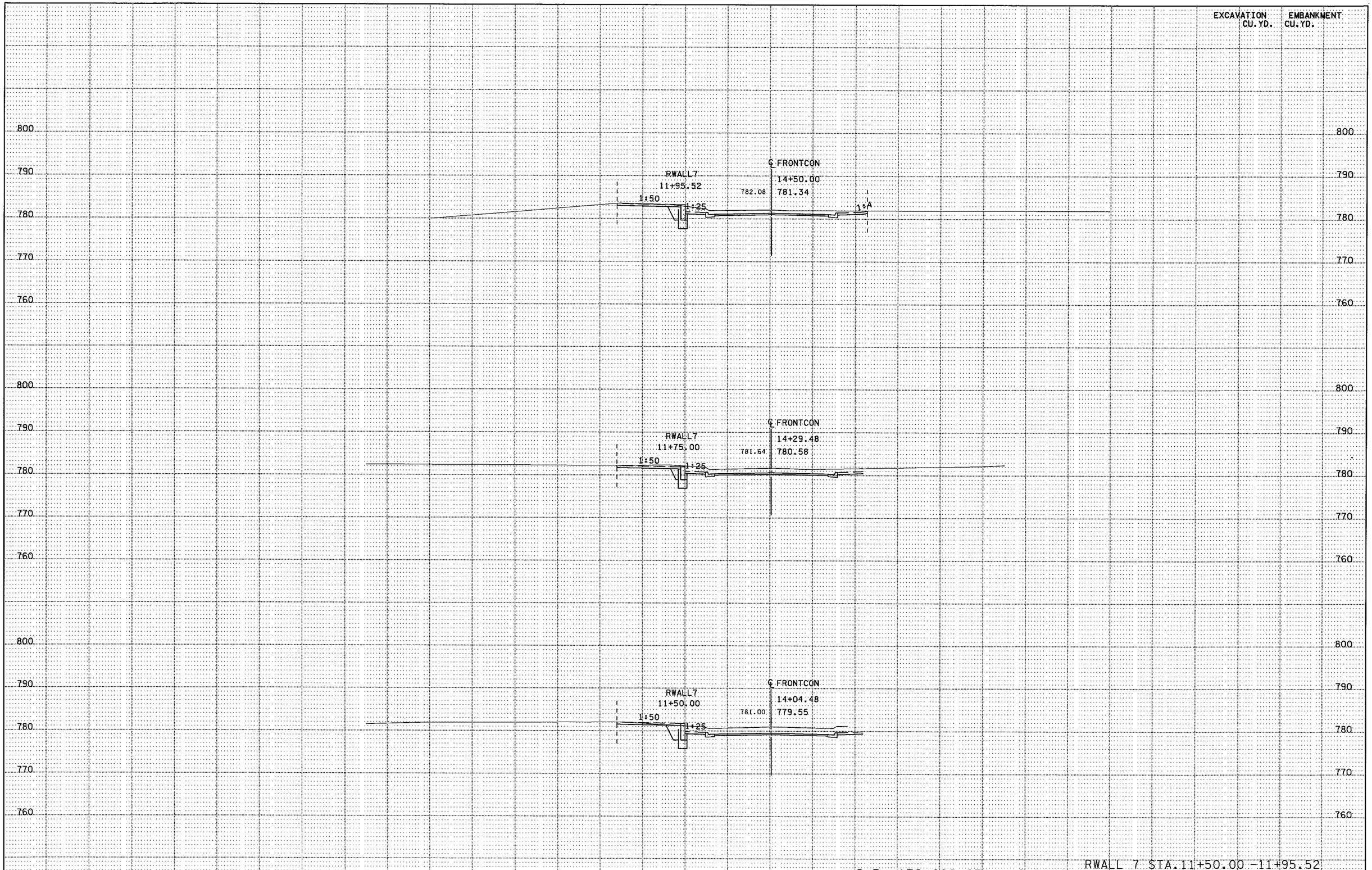

S.P. 179-020-031 S.P. 019-605-028

RWALL 7 STA.11+50.00 -11+95.52

SHEET 2 OF 2

DRAWN BY: MRS	CHECKED BY: HS	CERTIFIED BY _____ LICENSED PROFESSIONAL ENGINEER	LIC. NO. 18520 DATE 6/18/12	STATE PROJ. NO. 1901-148 (TH 13) SHEET NO. 350 OF 442 SHEETS

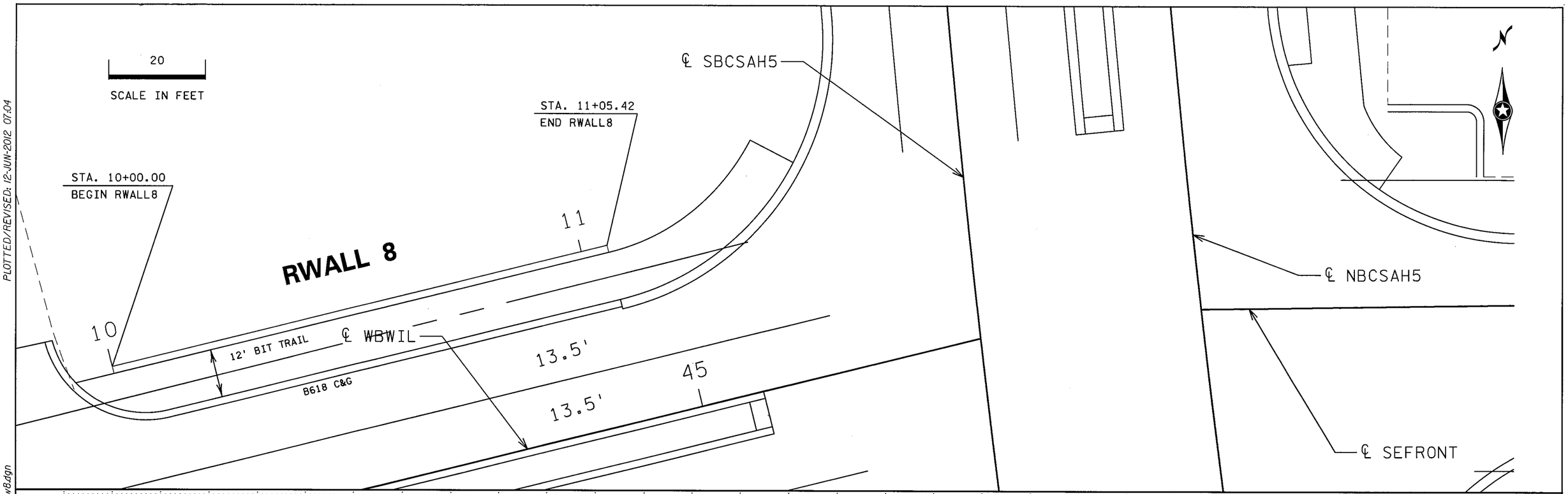

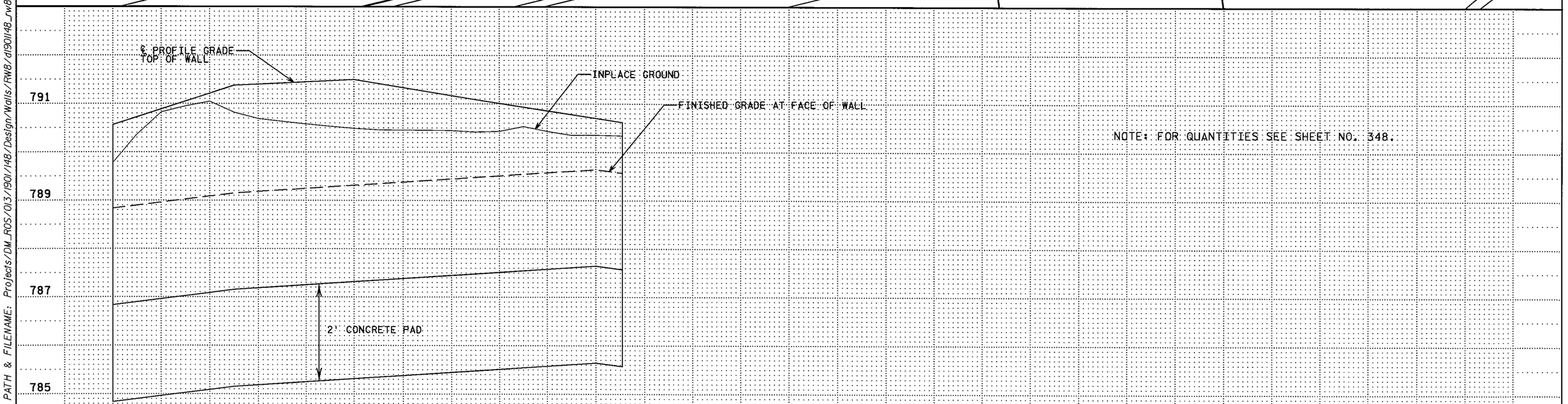

NOTE: FOR QUANTITIES SEE SHEET NO. 348.

S.P. 179-020-031 S.P. 019-605-028

RWALL8 PLAN, PROFILE

DRAWN BY: GJ	CHECKED BY: HS	CERTIFIED BY _____ LICENSED PROFESSIONAL ENGINEER	LIC. NO. 18520 DATE 6/18/12	STATE PROJ. NO. 1901-148 (T.H. 13) SHEET NO. 351 OF 442 SHEETS

PLOTTED/REVISED: 12-JUN-2012 07:04
DISTRICT #: METRO
IPLOT NAME: d190l148_rw8
PATH & FILENAME: Projects/DM_ROS/013/1901/148/Design/Walls/RW8/d190l148_rw8.dgn

EXCAVATION CU.YD.	EMBANKMENT CU.YD.

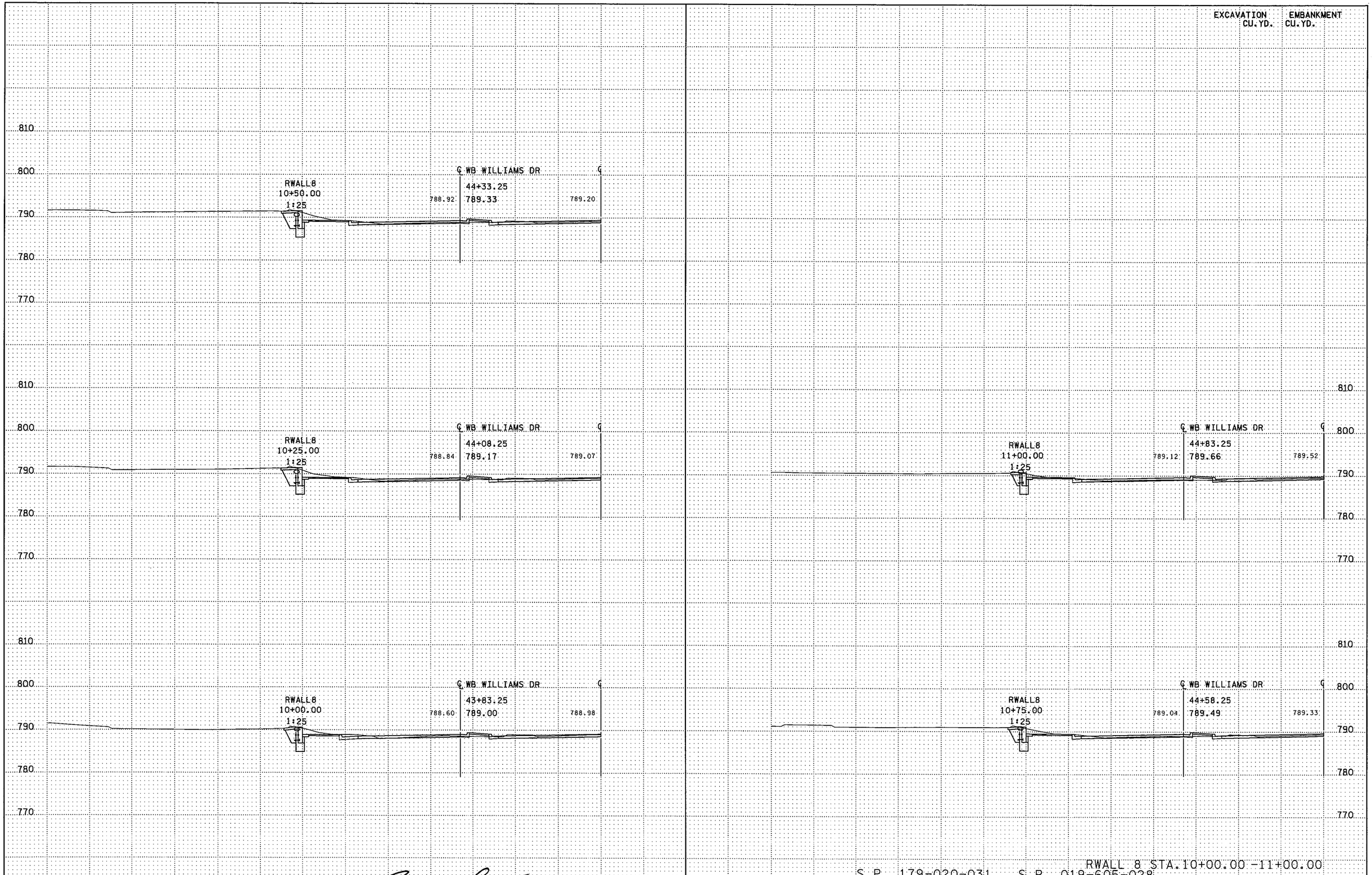

RWALL 8 STA.10+00.00 -11+00.00

S.P. 179-020-031 S.P. 019-605-028

DISTRICT #: METRO
IPLOT NAME: d190l148_rwall8_xpl
PATH & FILENAME: P:\Projects\DM_ROS\013\190\148\Design\Walls\RW8\d190l148_rwall8_xpl.dgn
PLOTTED/REVISED: 12-JUN-2012 06:55

DRAWN BY: GJ	CHECKED BY: HS	CERTIFIED BY _____ LICENSED PROFESSIONAL ENGINEER LIC. NO. 18520 DATE / /	STATE PROJ. NO. 1901-148 (TH 13) SHEET NO. 352 OF 442 SHEETS

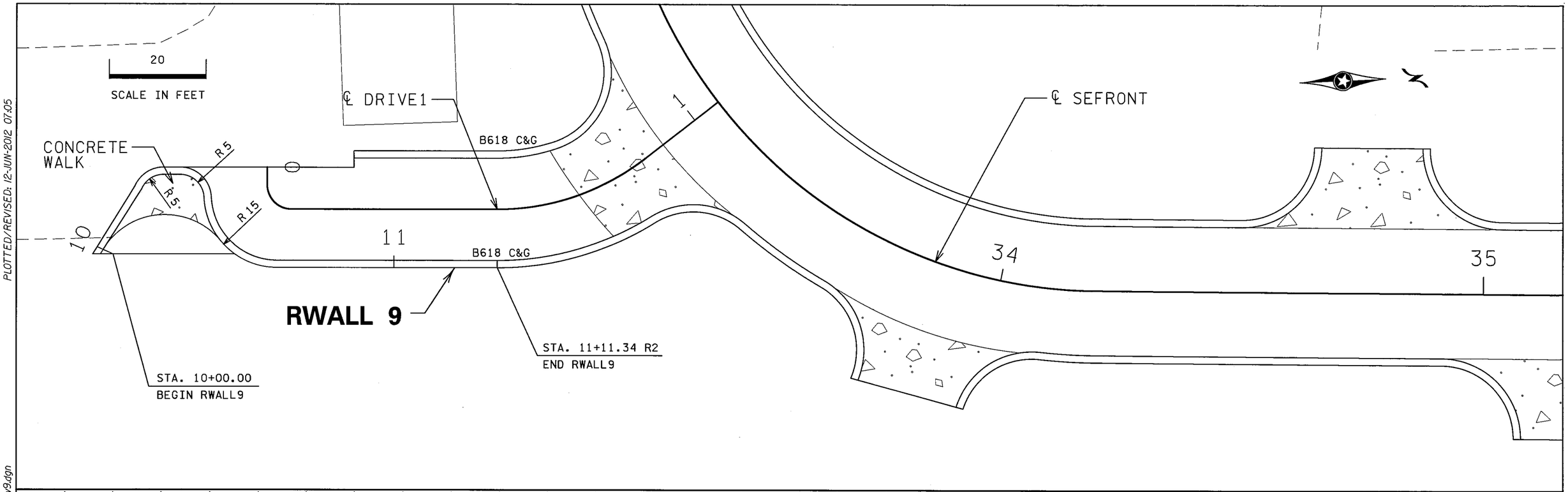

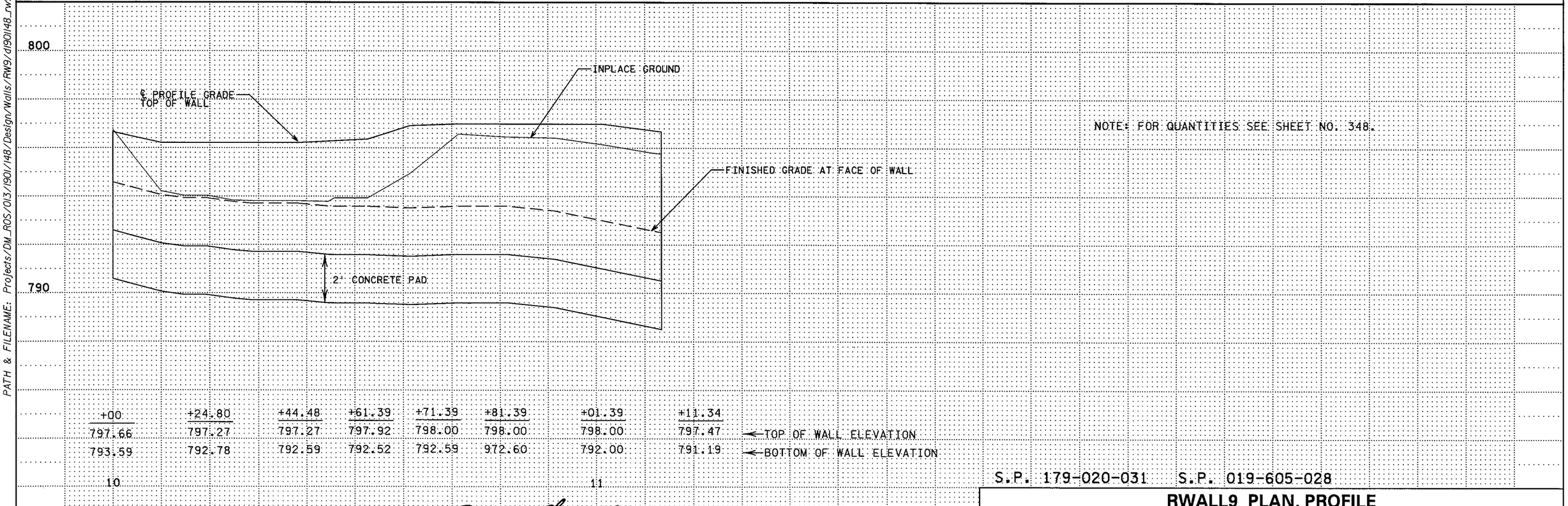

S.P. 179-020-031 S.P. 019-605-028

RWALL9 PLAN, PROFILE

DRAWN BY: GJ | CHECKED BY: HS | CERTIFIED BY _____ LICENSED PROFESSIONAL ENGINEER | LIC. NO. 18520 DATE 6/18/12 | STATE PROJ. NO. 1901-148 (T.H. 13) | SHEET NO. 353 OF 442 SHEETS

PLOTTED/REVISED: 12-JUN-2012 07:05
DISTRICT #: METRO
IPLOT NAME: d190l148_rw9
PATH & FILENAME: Projects/DM_ROS/013/190l/148/Design/Walls/RW9/d190l148_rw9.dgn

EXCAVATION CU. YD.	EMBANKMENT CU. YD.

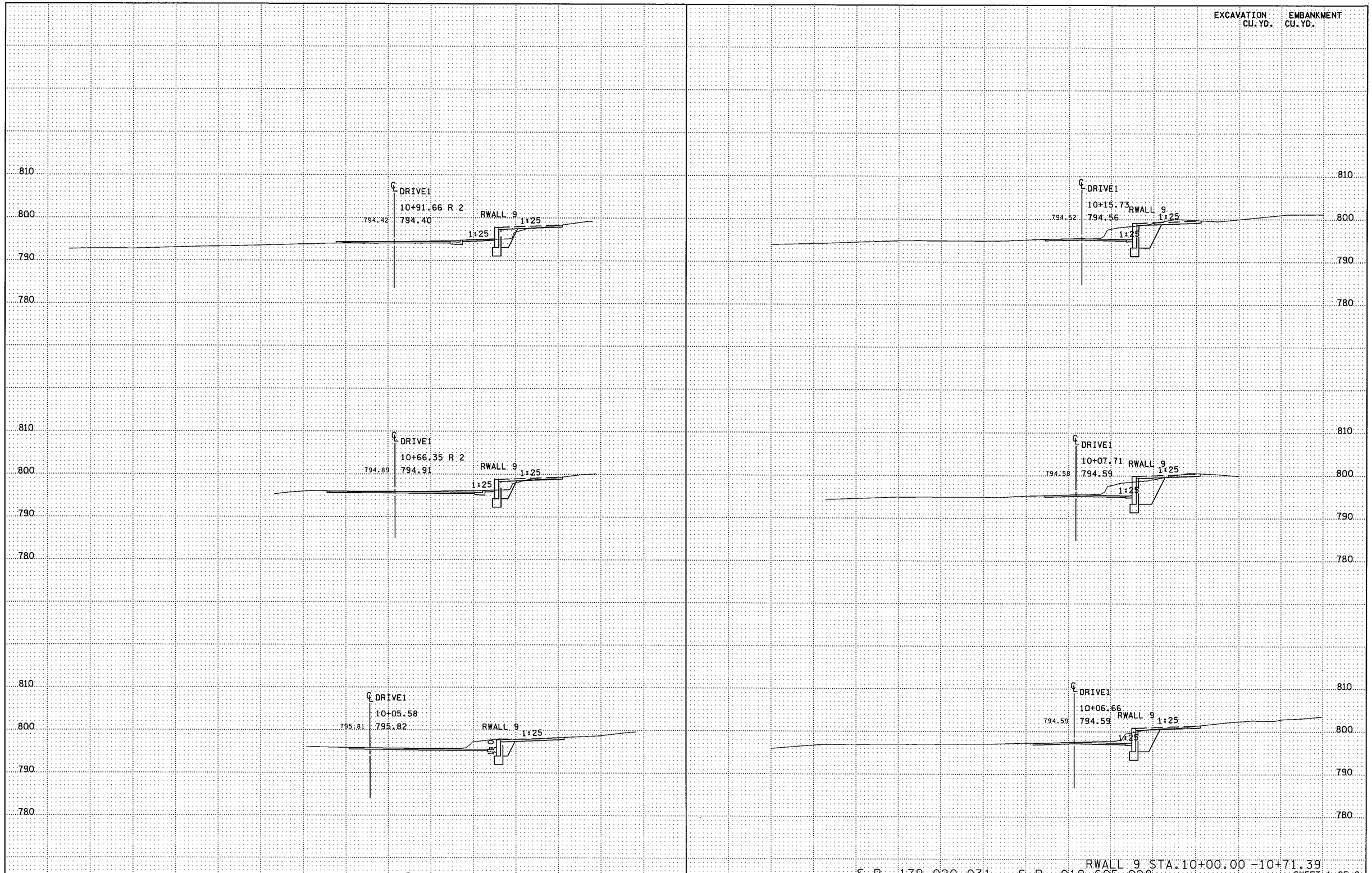

RWALL 9 STA.10+00.00 -10+71.39

S.P. 179-020-031 S.P. 019-605-028

SHEET 1 OF 2

DRAWN BY: MRS	CHECKED BY: HS	CERTIFIED BY _____ LICENSED PROFESSIONAL ENGINEER	LIC. NO. 18520 DATE / /	STATE PROJ. NO. 1901-148 (TH 13) SHEET NO. 354 OF 442 SHEETS

PLOTTED/REVISED: 12-JUN-2012 06:58
DISTRICT *: METRO
IPLOT NAME: d190ll48_rwall9_xpl
PATH & FILENAME: Projects/DM_R05/013/190l/148/Design/Walls/RW9/d190ll48_rwall9_xpl.dgn

EXCAVATION CU. YD.	EMBANKMENT CU. YD.

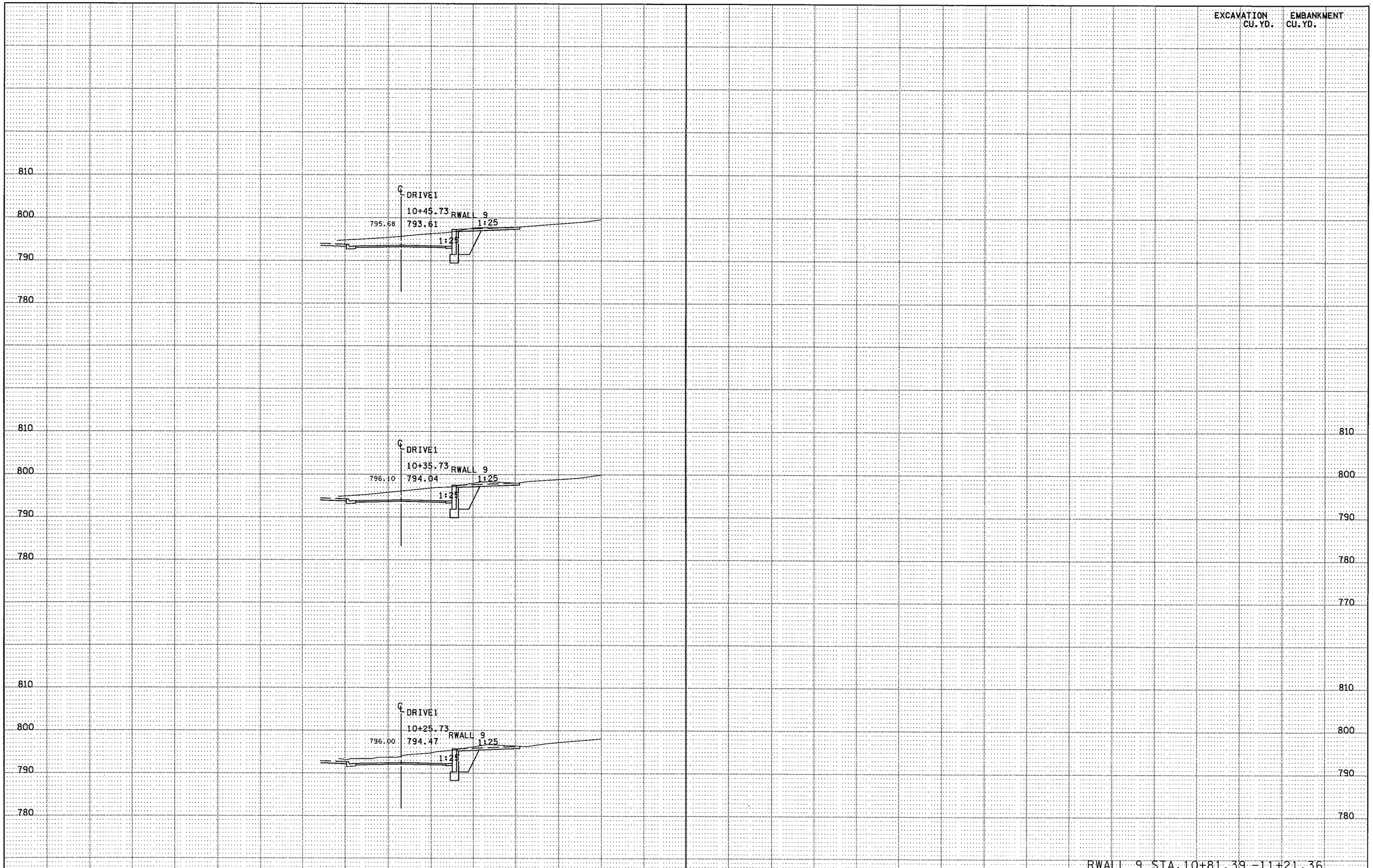

S.P. 179-020-031 S.P. 019-605-028

RWALL 9 STA.10+81.39 -11+21.36

SHEET 2 OF 2

DRAWN BY: MRS	CHECKED BY: HS	CERTIFIED BY LICENSED PROFESSIONAL ENGINEER	LIC. NO. 18520 DATE / /	STATE PROJ. NO. 1901-148 (TH 13) SHEET NO. 355 OF 442 SHEETS

PLOTTED/REVISED: 12-JUN-2012 06:59
DISTRICT * : METRO
IPLOT NAME: d1901148_rwall9_xpl
PATH & FILENAME: Projects/DM_ROS/013/1901/148/Design/Walls/RW9/d1901148_rwall9_xpl.dgn

PLOTTED/REVISED: 12-JUN-2012 07:02

DISTRICT #: METRO
IPLOT NAME: d1901148_NWALL_cp_01
FILENAME: Projects/DM_ROS/013/1901/148/Design/Walls/Nwall1/d1901148_NWALL_cp_01.dgn

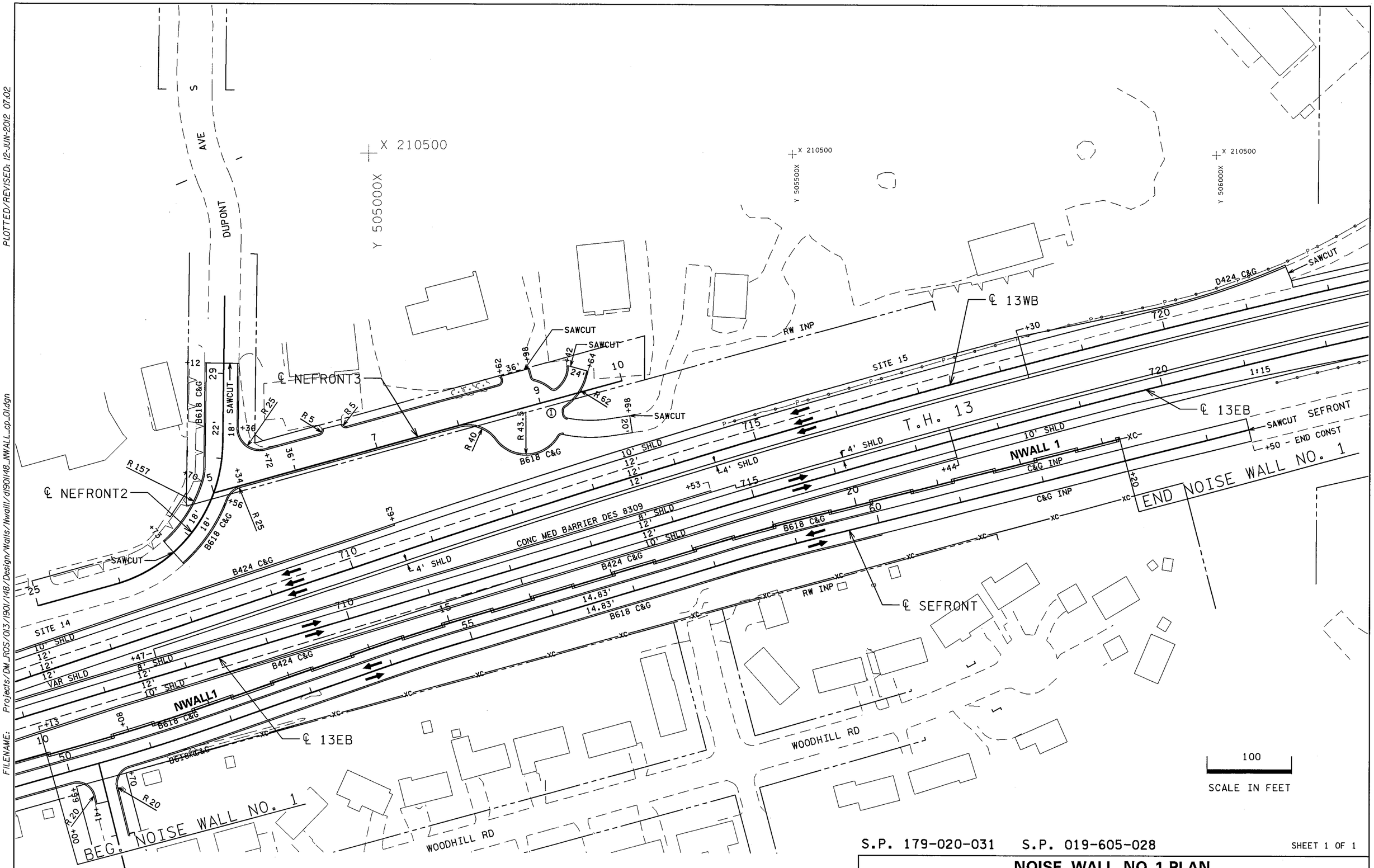

S.P. 179-020-031 S.P. 019-605-028

SHEET 1 OF 1

NOISE WALL NO. 1 PLAN

DRAWN BY: CT	CHECKED BY: HS	CERTIFIED BY _____ LICENSED PROFESSIONAL ENGINEER LIC. NO. 18520 DATE 6/18/12	STATE PROJ. NO. 1901-148 (T.H. 13) SHEET NO. 356 OF 442 SHEETS

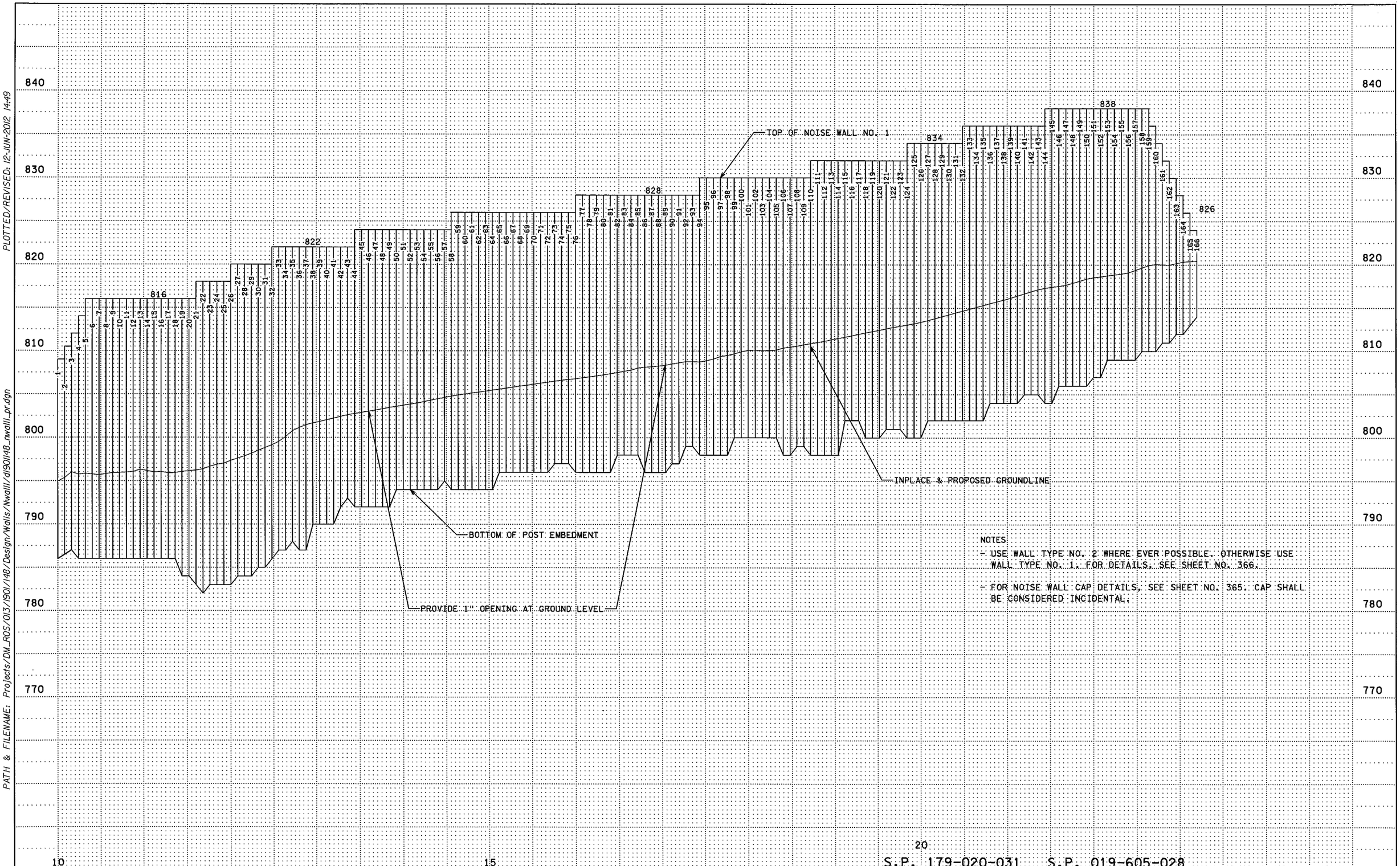

NOTES:

- USE WALL TYPE NO. 2 WHERE EVER POSSIBLE. OTHERWISE USE WALL TYPE NO. 1. FOR DETAILS, SEE SHEET NO. 366.
- FOR NOISE WALL CAP DETAILS, SEE SHEET NO. 365. CAP SHALL BE CONSIDERED INCIDENTAL.

S.P. 179-020-031 S.P. 019-605-028

NOISE WALL NO. 1 PROFILE

1 OF 1

DRAWN BY: GJ	CHECKED BY: HS	CERTIFIED BY _____ LICENSED PROFESSIONAL ENGINEER LIC. NO. 18520 DATE 6/18/12	STATE PROJ. NO. 1901-148 (T.H. 13) SHEET NO. 357 OF 442 SHEETS

DISTRICT #: METRO
IPLOT NAME: d190l148_nwalll_pr
PATH & FILENAME: Projects/DM_ROS/013/1901/148/Design/Walls/Nwalll/d190l148_nwalll_pr.dgn
PLOTTED/REVISED: 12-JUN-2012 14:49

NOISE WALL NO. 1

BB

POST NO.	WALL STATION (FT.)	GROUND ELEV.	SLOPE (V:H)	TOP OF WALL ELEV.	LOWER ELEV. OF BOTTOM PLANK	2" PLANKING (SQ.FT.)	3" PLANKING (SQ.FT.)	TOTAL PLANKING AREA (SQ.FT.)	TOP OF POST ELEV.	STEP	STEP HT. (FT.)	WALL HEIGHT (LIN. FT.)	FILL HEIGHT (FT.)	POST LENGTH (LIN. FT.)	POST EMBED-MENT (LIN. FT.)	BOTTOM OF POST ELEV.	POST NO.
1	10+00.00	795.45	1:10	809.00	794.95	108.40	4.00	112.40	809.00			13.55	0.00	23.00	9.45	786.00	1.00
2	10+08.00	795.86	1:10	810.50	795.36	117.14	4.00	121.14	810.50	step	1.50	14.64	0.00	24.00	9.36	786.50	2.00
3	10+16.00	796.52	1:10	812.00	795.74	126.09	4.00	130.09	812.00	step	1.50	15.48	0.00	25.00	9.52	787.00	3.00
4	10+24.00	796.24	1:10	814.00	795.74	142.09	4.00	146.09	814.00	step	2.00	17.76	0.00	28.00	10.24	786.00	4.00
5	10+32.00	796.35	1:10	816.00	795.77	157.84	4.00	161.84	816.00	step	2.00	19.65	0.00	30.00	10.35	786.00	5.00
6	10+40.00	796.27	1:10	816.00	795.68	158.57	4.00	162.57	816.00	no step	0.00	19.73	0.00	30.00	10.27	786.00	6.00
7	10+48.00	796.18	1:10	816.00	795.68	158.57	4.00	162.57	816.00	no step	0.00	19.82	0.00	30.00	10.18	786.00	7.00
8	10+56.00	796.32	1:10	816.00	795.82	157.46	4.00	161.46	816.00	no step	0.00	19.68	0.00	30.00	10.32	786.00	8.00
9	10+64.00	796.42	1:10	816.00	795.92	156.63	4.00	160.63	816.00	no step	0.00	19.58	0.00	30.00	10.42	786.00	9.00
10	10+72.00	796.45	1:10	816.00	795.95	156.42	4.00	160.42	816.00	no step	0.00	19.55	0.00	30.00	10.45	786.00	10.00
11	10+80.00	796.49	1:10	816.00	795.99	156.12	4.00	160.12	816.00	no step	0.00	19.52	0.00	30.00	10.49	786.00	11.00
12	10+88.00	796.57	1:10	816.00	796.07	155.47	4.00	159.47	816.00	no step	0.00	19.43	0.00	30.00	10.57	786.00	12.00
13	10+96.00	796.81	1:10	816.00	796.17	154.67	4.00	158.67	816.00	no step	0.00	19.19	0.00	30.00	10.81	786.00	13.00
14	11+04.00	796.67	1:10	816.00	796.00	156.04	4.00	160.04	816.00	no step	0.00	19.33	0.00	30.00	10.67	786.00	14.00
15	11+12.00	796.50	1:10	816.00	796.00	156.04	4.00	160.04	816.00	no step	0.00	19.50	0.00	30.00	10.50	786.00	15.00
16	11+20.00	796.55	1:10	816.00	795.90	156.80	4.00	160.80	816.00	no step	0.00	19.45	0.00	30.00	10.55	786.00	16.00
17	11+28.00	796.40	1:10	816.00	795.90	156.80	4.00	160.80	816.00	no step	0.00	19.60	0.00	30.00	10.40	786.00	17.00
18	11+36.00	796.42	1:10	816.00	795.92	156.60	4.00	160.60	816.00	no step	0.00	19.58	0.00	30.00	10.42	786.00	18.00
19	11+44.00	796.57	1:4	816.00	796.07	155.45	4.00	159.45	816.00	no step	0.00	19.43	0.00	32.00	12.57	784.00	19.00
20	11+52.00	796.64	1:4	816.00	796.14	154.88	4.00	158.88	816.00	no step	0.00	19.36	0.00	32.00	12.64	784.00	20.00
21	11+60.00	796.72	1:4	818.00	796.22	170.26	4.00	174.26	818.00	step	2.00	21.28	0.00	35.00	13.72	783.00	21.00
22	11+68.00	796.87	1:3	818.00	796.37	169.06	4.00	173.06	818.00	no step	0.00	21.13	0.00	36.00	14.87	782.00	22.00
23	11+76.00	797.16	1:3	818.00	796.66	166.74	4.00	170.74	818.00	no step	0.00	20.84	0.00	35.00	14.16	783.00	23.00
24	11+84.00	797.40	1:3	818.00	796.90	164.79	4.00	168.79	818.00	no step	0.00	20.60	0.00	35.00	14.40	783.00	24.00
25	11+92.00	797.51	1:3	818.00	797.01	163.91	4.00	167.91	818.00	no step	0.00	20.49	0.00	35.00	14.51	783.00	25.00
26	12+00.00	797.85	1:3	820.00	797.35	177.23	4.00	181.23	820.00	step	2.00	22.15	0.00	37.00	14.85	783.00	26.00
27	12+08.00	798.11	1:3	820.00	797.61	175.15	4.00	179.15	820.00	no step	0.00	21.89	0.00	36.00	14.11	784.00	27.00
28	12+16.00	798.36	1:3	820.00	797.86	173.15	4.00	177.15	820.00	no step	0.00	21.64	0.00	36.00	14.36	784.00	28.00
29	12+24.00	798.67	1:3	820.00	798.17	170.67	4.00	174.67	820.00	no step	0.00	21.33	0.00	36.00	14.67	784.00	29.00
30	12+32.00	799.00	1:3	820.00	798.50	167.99	4.00	171.99	820.00	no step	0.00	21.00	0.00	35.00	14.00	785.00	30.00
31	12+40.00	799.33	1:3	820.00	798.83	165.38	4.00	169.38	820.00	no step	0.00	20.67	0.00	35.00	14.33	785.00	31.00
32	12+48.00	799.65	1:4	822.00	799.15	178.76	4.00	182.76	822.00	step	2.00	22.35	0.00	36.00	13.65	786.00	32.00
33	12+56.00	800.04	1:4	822.00	799.54	175.71	4.00	179.71	822.00	no step	0.00	21.96	0.00	35.00	13.04	787.00	33.00
34	12+64.00	800.59	1:4	822.00	800.09	171.27	4.00	175.27	822.00	no step	0.00	21.41	0.00	35.00	13.59	787.00	34.00
35	12+72.00	801.27	1:4	822.00	800.77	165.84	4.00	169.84	822.00	no step	0.00	20.73	0.00	34.00	13.27	788.00	35.00
36	12+80.00	801.63	1:3	822.00	801.13	162.93	4.00	166.93	822.00	no step	0.00	20.37	0.00	35.00	14.63	787.00	36.00
37	12+88.00	801.96	1:3	822.00	801.46	160.30	4.00	164.30	822.00	no step	0.00	20.04	0.00	35.00	14.96	787.00	37.00
38	12+96.00	802.16	1:4	822.00	801.66	158.70	4.00	162.70	822.00	no step	0.00	19.84	0.00	32.00	12.16	790.00	38.00
39	13+04.00	802.34	1:4	822.00	801.84	157.27	4.00	161.27	822.00	no step	0.00	19.66	0.00	32.00	12.34	790.00	39.00
40	13+12.00	802.53	1:4	822.00	802.03	155.77	4.00	159.77	822.00	no step	0.00	19.47	0.00	32.00	12.53	790.00	40.00
41	13+20.00	802.72	1:4	822.00	802.22	154.23	4.00	158.23	822.00	no step	0.00	19.28	0.00	32.00	12.72	790.00	41.00
42	13+28.00	802.91	1:10	822.00	802.41	152.69	4.00	156.69	822.00	no step	0.00	19.09	0.00	30.00	10.91	792.00	42.00
43	13+36.00	803.11	1:10	822.00	802.61	151.12	4.00	155.12	822.00	no step	0.00	18.89	0.00	29.00	10.11	793.00	43.00
44	13+44.00	803.25	1:10	824.00	802.75	166.02	4.00	170.02	824.00	step	2.00	20.75	0.00	32.00	11.25	792.00	44.00
45	13+52.00	803.38	1:10	824.00	802.88	164.93	4.00	168.93	824.00	no step	0.00	20.62	0.00	32.00	11.38	792.00	45.00
46	13+60.00	803.52	1:10	824.00	803.02	163.84	4.00	167.84	824.00	no step	0.00	20.48	0.00	32.00	11.52	792.00	46.00
47	13+68.00	803.66	1:10	824.00	803.16	162.75	4.00	166.75	824.00	no step	0.00	20.34	0.00	32.00	11.66	792.00	47.00
48	13+76.00	803.80	1:10	824.00	803.30	161.61	4.00	165.61	824.00	no step	0.00	20.20	0.00	32.00	11.80	792.00	48.00
49	13+84.00	803.95	1:10	824.00	803.45	160.38	4.00	164.38	824.00	no step	0.00	20.05	0.00	32.00	11.95	792.00	49.00
50	13+92.00	804.08	1:10	824.00	803.58	159.33	4.00	163.33	824.00	no step	0.00	19.92	0.00	30.00	10.08	794.00	50.00
51	14+00.00	804.21	1:10	824.00	803.71	158.29	4.00	162.29	824.00	no step	0.00	19.79	0.00	30.00	10.21	794.00	51.00
52	14+08.00	804.35	1:10	824.00	803.85	157.24	4.00	161.24	824.00	no step	0.00	19.65	0.00	30.00	10.35	794.00	52.00
53	14+16.00	804.48	1:10	824.00	803.98	156.18	4.00	160.18	824.00	no step	0.00	19.52	0.00	30.00	10.48	794.00	53.00
54	14+24.00	804.63	1:10	824.00	804.13	154.93	4.00	158.93	824.00	no step	0.00	19.37	0.00	30.00	10.63	794.00	54.00
55	14+32.00	804.81	1:10	824.00	804.31	153.54	4.00	157.54	824.00	no step	0.00	19.19	0.00	30.00	10.81	794.00	55.00
SUB-TOTALS						8726.05	220.00	8942.05						1744.00			

S.P. 179-020-031 S.P. 019-605-028

SHEET 1 OF 3

NOISE WALL NO. 1 TABULATIONS

DRAWN BY: CT | CHECKED BY: HS | CERTIFIED BY _____ LICENSED PROFESSIONAL ENGINEER LIC. NO. 18520 DATE 6/18/12

STATE PROJ. NO. 1901-148 (T.H. 13) SHEET NO. 358 OF 442 SHEETS

PLOTTED/REVISED: 12-JUN-2012 07:12
DISTRICT #: METRO
IPLOT NAME: d1901148_NWALL_tabl
FILENAME: Projects/DM_ROS/013/1901/148/Design/Walls/Nwall1/d1901148_NWALL_tabl.dgn

NOISE WALL NO. 1

BB

POST NO.	WALL STATION (FT.)	GROUND ELEV.	SLOPE (V:H)	TOP OF WALL ELEV.	LOWER ELEV. OF BOTTOM PLANK	2" PLANKING (SQ.FT.)	3" PLANKING (SQ.FT.)	TOTAL PLANKING AREA (SQ.FT.)	TOP OF POST ELEV.	STEP	STEP HT. (FT.)	WALL HEIGHT (LIN. FT.)	FILL HEIGHT (FT.)	POST LENGTH (LIN. FT.)	POST EMBED-MENT (LIN. FT.)	BOTTOM OF POST ELEV.	POST NO.
56	14+40.00	804.96	1:10	824.00	804.46	152.30	4.00	156.30	824.00	no step	0.00	19.04	0.00	30.00	10.96	794.00	56.00
57	14+48.00	805.12	1:10	824.00	804.62	151.04	4.00	155.04	824.00	no step	0.00	18.88	0.00	29.00	10.12	795.00	57.00
58	14+56.00	805.27	1:10	826.00	804.77	165.80	4.00	169.80	826.00	step	2.00	20.73	0.00	32.00	11.27	794.00	58.00
59	14+64.00	805.41	1:10	826.00	804.91	164.72	4.00	168.72	826.00	no step	0.00	20.59	0.00	32.00	11.41	794.00	59.00
60	14+72.00	805.52	1:10	826.00	805.02	163.83	4.00	167.83	826.00	no step	0.00	20.48	0.00	32.00	11.52	794.00	60.00
61	14+80.00	805.63	1:10	826.00	805.13	162.95	4.00	166.95	826.00	no step	0.00	20.37	0.00	32.00	11.63	794.00	61.00
62	14+88.00	805.74	1:10	826.00	805.24	162.06	4.00	166.06	826.00	no step	0.00	20.26	0.00	32.00	11.74	794.00	62.00
63	14+96.00	805.85	1:10	826.00	805.35	161.17	4.00	165.17	826.00	no step	0.00	20.15	0.00	32.00	11.85	794.00	63.00
64	15+04.00	805.98	1:10	826.00	805.48	160.18	4.00	164.18	826.00	no step	0.00	20.02	0.00	32.00	11.98	794.00	64.00
65	15+12.00	806.09	1:10	826.00	805.59	159.25	4.00	163.25	826.00	no step	0.00	19.91	0.00	30.00	10.09	796.00	65.00
66	15+20.00	806.21	1:10	826.00	805.71	158.35	4.00	162.35	826.00	no step	0.00	19.79	0.00	30.00	10.21	796.00	66.00
67	15+28.00	806.32	1:10	826.00	805.82	157.45	4.00	161.45	826.00	no step	0.00	19.68	0.00	30.00	10.32	796.00	67.00
68	15+36.00	806.43	1:10	826.00	805.93	156.53	4.00	160.53	826.00	no step	0.00	19.57	0.00	30.00	10.43	796.00	68.00
69	15+44.00	806.54	1:10	826.00	806.04	155.65	4.00	159.65	826.00	no step	0.00	19.46	0.00	30.00	10.54	796.00	69.00
70	15+52.00	806.65	1:10	826.00	806.15	154.81	4.00	158.81	826.00	no step	0.00	19.35	0.00	30.00	10.65	796.00	70.00
71	15+60.00	806.77	1:10	826.00	806.27	153.86	4.00	157.86	826.00	no step	0.00	19.23	0.00	30.00	10.77	796.00	71.00
72	15+68.00	806.89	1:10	826.00	806.39	152.92	4.00	156.92	826.00	no step	0.00	19.11	0.00	30.00	10.89	796.00	72.00
73	15+76.00	807.00	1:10	826.00	806.50	151.97	4.00	155.97	826.00	no step	0.00	19.00	0.00	29.00	10.00	797.00	73.00
74	15+84.00	807.12	1:10	826.00	806.62	151.07	4.00	155.07	826.00	no step	0.00	18.88	0.00	29.00	10.12	797.00	74.00
75	15+92.00	807.20	1:10	826.00	806.70	150.40	4.00	154.40	826.00	no step	0.00	18.80	0.00	29.00	10.20	797.00	75.00
76	16+00.00	807.30	1:10	828.00	806.80	165.64	4.00	169.64	828.00	step	2.00	20.70	0.00	32.00	11.30	796.00	76.00
77	16+08.00	807.40	1:10	828.00	806.90	164.78	4.00	168.78	828.00	no step	0.00	20.60	0.00	32.00	11.40	796.00	77.00
78	16+16.00	807.51	1:10	828.00	807.01	163.93	4.00	167.93	828.00	no step	0.00	20.49	0.00	32.00	11.51	796.00	78.00
79	16+24.00	807.62	1:10	828.00	807.12	163.02	4.00	167.02	828.00	no step	0.00	20.38	0.00	32.00	11.62	796.00	79.00
80	16+32.00	807.74	1:10	828.00	807.24	162.09	4.00	166.09	828.00	no step	0.00	20.26	0.00	32.00	11.74	796.00	80.00
81	16+40.00	807.87	1:10	828.00	807.37	161.07	4.00	165.07	828.00	no step	0.00	20.13	0.00	32.00	11.87	796.00	81.00
82	16+48.00	808.01	1:10	828.00	807.51	159.92	4.00	163.92	828.00	no step	0.00	19.99	0.00	30.00	10.01	798.00	82.00
83	16+56.00	808.15	1:10	828.00	807.65	158.77	4.00	162.77	828.00	no step	0.00	19.85	0.00	30.00	10.15	798.00	83.00
84	16+64.00	808.30	1:10	828.00	807.80	157.63	4.00	161.63	828.00	no step	0.00	19.70	0.00	30.00	10.30	798.00	84.00
85	16+72.00	808.54	1:10	828.00	808.04	155.66	4.00	159.66	828.00	no step	0.00	19.46	0.00	30.00	10.54	798.00	85.00
86	16+80.00	808.61	1:4	828.00	808.11	155.08	4.00	159.08	828.00	no step	0.00	19.39	0.00	32.00	12.61	796.00	86.00
87	16+88.00	808.69	1:4	828.00	808.19	154.50	4.00	158.50	828.00	no step	0.00	19.31	0.00	32.00	12.69	796.00	87.00
88	16+96.00	808.76	1:4	828.00	808.26	153.92	4.00	157.92	828.00	no step	0.00	19.24	0.00	32.00	12.76	796.00	88.00
89	17+04.00	808.86	1:4	828.00	808.36	153.09	4.00	157.09	828.00	no step	0.00	19.14	0.00	32.00	12.86	796.00	89.00
90	17+12.00	809.00	1:4	828.00	808.50	151.99	4.00	155.99	828.00	no step	0.00	19.00	0.00	31.00	12.00	797.00	90.00
91	17+20.00	809.14	1:4	828.00	808.64	150.90	4.00	154.90	828.00	no step	0.00	18.86	0.00	31.00	12.14	797.00	91.00
92	17+28.00	809.27	1:10	828.00	808.77	149.83	4.00	153.83	828.00	no step	0.00	18.73	0.00	29.00	10.27	799.00	92.00
93	17+36.00	809.27	1:10	828.00	808.74	150.10	4.00	154.10	828.00	no step	0.00	18.73	0.00	29.00	10.27	799.00	93.00
94	17+44.00	809.24	1:10	830.00	808.74	166.10	4.00	170.10	830.00	step	2.00	20.76	0.00	32.00	11.24	798.00	94.00
95	17+52.00	809.38	1:10	830.00	808.88	164.94	4.00	168.94	830.00	no step	0.00	20.62	0.00	32.00	11.38	798.00	95.00
96	17+60.00	809.58	1:10	830.00	809.08	163.37	4.00	167.37	830.00	no step	0.00	20.42	0.00	32.00	11.58	798.00	96.00
97	17+68.00	809.88	1:10	830.00	809.38	161.00	4.00	165.00	830.00	no step	0.00	20.13	0.00	32.00	11.88	798.00	97.00
98	17+76.00	810.00	1:10	830.00	809.50	160.02	4.00	164.02	830.00	no step	0.00	20.00	0.00	32.00	12.00	798.00	98.00
99	17+84.00	810.20	1:10	830.00	809.70	158.42	4.00	162.42	830.00	no step	0.00	19.80	0.00	30.00	10.20	800.00	99.00
100	17+92.00	810.41	1:10	830.00	809.91	156.76	4.00	160.76	830.00	no step	0.00	19.60	0.00	30.00	10.41	800.00	100.00
101	18+00.00	810.59	1:10	830.00	810.09	155.31	4.00	159.31	830.00	no step	0.00	19.41	0.00	30.00	10.59	800.00	101.00
102	18+08.00	810.63	1:10	830.00	810.04	155.66	4.00	159.66	830.00	no step	0.00	19.37	0.00	30.00	10.63	800.00	102.00
103	18+16.00	810.54	1:10	830.00	810.04	155.66	4.00	159.66	830.00	no step	0.00	19.46	0.00	30.00	10.54	800.00	103.00
104	18+24.00	810.60	1:10	830.00	810.10	155.24	4.00	159.24	830.00	no step	0.00	19.40	0.00	30.00	10.60	800.00	104.00
105	18+32.00	810.63	1:10	830.00	810.13	154.98	4.00	158.98	830.00	no step	0.00	19.37	0.00	30.00	10.63	800.00	105.00
106	18+40.00	810.86	1:4	830.00	810.36	153.16	4.00	157.16	830.00	no step	0.00	19.14	0.00	32.00	12.86	798.00	106.00
107	18+48.00	810.97	1:4	830.00	810.47	152.27	4.00	156.27	830.00	no step	0.00	19.03	0.00	32.00	12.97	798.00	107.00
108	18+56.00	811.08	1:4	830.00	810.58	151.36	4.00	155.36	830.00	no step	0.00	18.92	0.00	31.00	12.08	799.00	108.00
109	18+64.00	811.24	1:4	830.00	810.74	150.09	4.00	154.09	830.00	no step	0.00	18.76	0.00	31.00	12.24	799.00	109.00
110	18+72.00	811.38	1:4	832.00	810.88	164.99	4.00	168.99	832.00	step	2.00	20.62	0.00	34.00	13.38	798.00	110.00
SUB-TOTALS						8657.57	220.00	8877.57						1700.00			

S.P. 179-020-031 S.P. 019-605-028

SHEET 2 OF 3

NOISE WALL NO. 1 TABULATIONS

DRAWN BY: CT | CHECKED BY: HS | CERTIFIED BY _____ LICENSED PROFESSIONAL ENGINEER LIC. NO. 18520 DATE 6/18/12

STATE PROJ. NO. 1901-148 (T.H. 13) SHEET NO. 359 OF 442 SHEETS

DISTRICT : METRO
IPLOT NAME: d1901148_NWALL_tabl
FILENAME: Projects/DM_ROS/013/1901/148/Design/Walls/Nwalll/d1901148_NWALL_tabl.dgn
PLOTTED/REVISED: 12-JUN-2012 07:11

NOISE WALL NO. 1

BB

POST NO.	WALL STATION (FT.)	GROUND ELEV.	SLOPE (V:H)	TOP OF WALL ELEV.	LOWER ELEV. OF BOTTOM PLANK	2" PLANKING (SQ.FT.)	3" PLANKING (SQ.FT.)	TOTAL PLANKING AREA (SQ.FT.)	TOP OF POST ELEV.	STEP	STEP HT. (FT.)	WALL HEIGHT (LIN. FT.)	FILL HEIGHT (FT.)	POST LENGTH (LIN. FT.)	POST EMBED-MENT (LIN. FT.)	BOTTOM OF POST ELEV.	POST NO.
111	18+80.00	811.50	1:4	832.00	811.00	163.97	4.00	167.97	832.00	no step	0.00	20.50	0.00	34.00	13.50	798.00	111.00
112	18+88.00	811.64	1:4	832.00	811.14	162.91	4.00	166.91	832.00	no step	0.00	20.36	0.00	34.00	13.64	798.00	112.00
113	18+96.00	811.82	1:4	832.00	811.32	161.43	4.00	165.43	832.00	no step	0.00	20.18	0.00	34.00	13.82	798.00	113.00
114	19+04.00	811.97	1:4	832.00	811.47	160.24	4.00	164.24	832.00	no step	0.00	20.03	0.00	34.00	13.97	798.00	114.00
115	19+12.00	812.12	1:10	832.00	811.62	159.00	4.00	163.00	832.00	no step	0.00	19.88	0.00	30.00	10.12	802.00	115.00
116	19+20.00	812.28	1:10	832.00	811.78	157.72	4.00	161.72	832.00	no step	0.00	19.72	0.00	30.00	10.28	802.00	116.00
117	19+28.00	812.46	1:10	832.00	811.96	156.32	4.00	160.32	832.00	no step	0.00	19.54	0.00	30.00	10.46	802.00	117.00
118	19+36.00	812.63	1:4	832.00	812.13	155.00	4.00	159.00	832.00	no step	0.00	19.37	0.00	32.00	12.63	800.00	118.00
119	19+44.00	812.77	1:4	832.00	812.27	153.83	4.00	157.83	832.00	no step	0.00	19.23	0.00	32.00	12.77	800.00	119.00
120	19+52.00	812.92	1:4	832.00	812.42	152.61	4.00	156.61	832.00	no step	0.00	19.08	0.00	32.00	12.92	800.00	120.00
121	19+60.00	813.09	1:4	832.00	812.59	151.25	4.00	155.25	832.00	no step	0.00	18.91	0.00	31.00	12.09	801.00	121.00
122	19+68.00	813.26	1:4	832.00	812.76	149.89	4.00	153.89	832.00	no step	0.00	18.74	0.00	31.00	12.26	801.00	122.00
123	19+76.00	813.40	1:4	832.00	812.90	148.83	4.00	152.83	832.00	no step	0.00	18.60	0.00	31.00	12.40	801.00	123.00
124	19+84.00	813.54	1:4	834.00	813.04	163.64	4.00	167.64	834.00	step	2.00	20.46	0.00	34.00	13.54	800.00	124.00
125	19+92.00	813.70	1:4	834.00	813.20	162.42	4.00	166.42	834.00	no step	0.00	20.30	0.00	34.00	13.70	800.00	125.00
126	20+00.00	813.86	1:4	834.00	813.36	161.16	4.00	165.16	834.00	no step	0.00	20.14	0.00	34.00	13.86	800.00	126.00
127	20+08.00	814.07	1:4	834.00	813.57	159.46	4.00	163.46	834.00	no step	0.00	19.93	0.00	32.00	12.07	802.00	127.00
128	20+16.00	814.28	1:4	834.00	813.78	157.76	4.00	161.76	834.00	no step	0.00	19.72	0.00	32.00	12.28	802.00	128.00
129	20+24.00	814.51	1:4	834.00	814.01	155.96	4.00	159.96	834.00	no step	0.00	19.49	0.00	32.00	12.51	802.00	129.00
130	20+32.00	814.73	1:4	834.00	814.23	154.14	4.00	158.14	834.00	no step	0.00	19.27	0.00	32.00	12.73	802.00	130.00
131	20+40.00	814.96	1:4	834.00	814.46	152.32	4.00	156.32	834.00	no step	0.00	19.04	0.00	32.00	12.96	802.00	131.00
132	20+48.00	815.17	1:4	836.00	814.67	166.64	4.00	170.64	836.00	step	2.00	20.83	0.00	34.00	13.17	802.00	132.00
133	20+56.00	815.38	1:4	836.00	814.88	164.96	4.00	168.96	836.00	no step	0.00	20.62	0.00	34.00	13.38	802.00	133.00
134	20+64.00	815.59	1:4	836.00	815.09	163.27	4.00	167.27	836.00	no step	0.00	20.41	0.00	34.00	13.59	802.00	134.00
135	20+72.00	815.81	1:4	836.00	815.31	161.49	4.00	165.49	836.00	no step	0.00	20.19	0.00	34.00	13.81	802.00	135.00
136	20+80.00	816.03	1:4	836.00	815.53	159.79	4.00	163.79	836.00	no step	0.00	19.97	0.00	32.00	12.03	804.00	136.00
137	20+88.00	816.23	1:4	836.00	815.73	158.19	4.00	162.19	836.00	no step	0.00	19.77	0.00	32.00	12.23	804.00	137.00
138	20+96.00	816.43	1:4	836.00	815.93	156.59	4.00	160.59	836.00	no step	0.00	19.57	0.00	32.00	12.43	804.00	138.00
139	21+04.00	816.66	1:4	836.00	816.16	154.70	4.00	158.70	836.00	no step	0.00	19.34	0.00	32.00	12.66	804.00	139.00
140	21+12.00	816.91	1:4	836.00	816.41	152.73	4.00	156.73	836.00	no step	0.00	19.09	0.00	32.00	12.91	804.00	140.00
141	21+20.00	817.16	1:4	836.00	816.66	150.71	4.00	154.71	836.00	no step	0.00	18.84	0.00	31.00	12.16	805.00	141.00
142	21+28.00	817.41	1:4	836.00	816.91	148.69	4.00	152.69	836.00	no step	0.00	18.59	0.00	31.00	12.41	805.00	142.00
143	21+36.00	817.64	1:4	836.00	817.14	146.87	4.00	150.87	836.00	no step	0.00	18.36	0.00	31.00	12.64	805.00	143.00
144	21+44.00	817.81	1:4	838.00	817.31	161.48	4.00	165.48	838.00	step	2.00	20.19	0.00	34.00	13.81	804.00	144.00
145	21+52.00	817.92	1:4	838.00	817.42	160.61	4.00	164.61	838.00	no step	0.00	20.08	0.00	34.00	13.92	804.00	145.00
146	21+60.00	818.03	1:4	838.00	817.53	159.73	4.00	163.73	838.00	no step	0.00	19.97	0.00	32.00	12.03	806.00	146.00
147	21+68.00	818.16	1:4	838.00	817.66	158.72	4.00	162.72	838.00	no step	0.00	19.84	0.00	32.00	12.16	806.00	147.00
148	21+76.00	818.39	1:4	838.00	817.89	156.85	4.00	160.85	838.00	no step	0.00	19.61	0.00	32.00	12.39	806.00	148.00
149	21+84.00	818.64	1:4	838.00	818.14	154.88	4.00	158.88	838.00	no step	0.00	19.36	0.00	32.00	12.64	806.00	149.00
150	21+92.00	818.88	1:4	838.00	818.38	152.97	4.00	156.97	838.00	no step	0.00	19.12	0.00	32.00	12.88	806.00	150.00
151	22+00.00	819.03	1:4	838.00	818.53	151.80	4.00	155.80	838.00	no step	0.00	18.97	0.00	31.00	12.03	807.00	151.00
152	22+08.00	819.14	1:4	838.00	818.64	150.92	4.00	154.92	838.00	no step	0.00	18.86	0.00	31.00	12.14	807.00	152.00
153	22+16.00	819.25	1:10	838.00	818.75	150.04	4.00	154.04	838.00	no step	0.00	18.76	0.00	29.00	10.25	809.00	153.00
154	22+24.00	819.35	1:10	838.00	818.85	149.16	4.00	153.16	838.00	no step	0.00	18.65	0.00	29.00	10.35	809.00	154.00
155	22+32.00	819.46	1:10	838.00	818.96	148.28	4.00	152.28	838.00	no step	0.00	18.54	0.00	29.00	10.46	809.00	155.00
156	22+40.00	819.60	1:10	838.00	819.10	147.19	4.00	151.19	838.00	no step	0.00	18.40	0.00	29.00	10.60	809.00	156.00
157	22+48.00	819.88	1:10	838.00	819.38	144.93	4.00	148.93	838.00	no step	0.00	18.12	0.00	29.00	10.88	809.00	157.00
158	22+56.00	820.17	1:10	838.00	819.67	142.66	4.00	146.66	838.00	no step	0.00	17.83	0.00	28.00	10.17	810.00	158.00
159	22+64.00	820.45	1:10	838.00	819.95	140.40	4.00	144.40	838.00	no step	0.00	17.55	0.00	28.00	10.45	810.00	159.00
160	22+72.00	820.59	1:10	836.00	820.02	123.85	4.00	127.85	838.00	step	2.00	17.41	0.00	28.00	10.59	810.00	160.00
161	22+80.00	820.52	1:10	834.00	820.00	108.02	4.00	112.02	836.00	step	2.00	15.48	0.00	25.00	9.52	811.00	161.00
162	22+88.00	820.50	1:10	832.00	820.00	92.02	4.00	96.02	834.00	step	2.00	13.50	0.00	23.00	9.50	811.00	162.00
163	22+96.00	820.68	1:10	830.00	820.18	74.55	4.00	78.55	832.00	step	2.00	11.32	0.00	20.00	8.68	812.00	163.00
164	23+04.00	820.85	1:10	828.00	820.35	57.23	4.00	61.23	830.00	step	2.00	9.15	0.00	18.00	8.85	812.00	164.00
165	23+12.00	820.90	1:10	826.00	820.40	40.84	4.00	44.84	828.00	step	2.00	7.11	0.00	15.00	7.89	813.00	165.00
166	23+20.00	820.94	1:10	824.00	820.44				826.00	step	2.00	5.06	0.00	12.00	6.94	814.00	166.00
SUB-TOTALS						8111.65	224.00	8335.65						1698.00			
INTERCHANGE FUND TOTALS						25495.27	664.00	26159.27						5142.00			

S.P. 179-020-031 S.P. 019-605-028

SHEET 3 OF 3

NOISE WALL NO. 1 TABULATIONS

DRAWN BY: CT | CHECKED BY: HS | CERTIFIED BY _____ LICENSED PROFESSIONAL ENGINEER LIC. NO. 18520 DATE 6/18/12

STATE PROJ. NO. 1901-148 (T.H. 13) SHEET NO. 360 OF 442 SHEETS

PLOTTED/REVISED: 12-JUN-2012 07:12
DISTRICT #: METRO
IPLOT NAME: d190l148_NWALL_tabl
FILENAME: Projects/DM_ROS/013/1901/148/Design/Walls/Nwalll/d190l148_NWALL_tabl.dgn

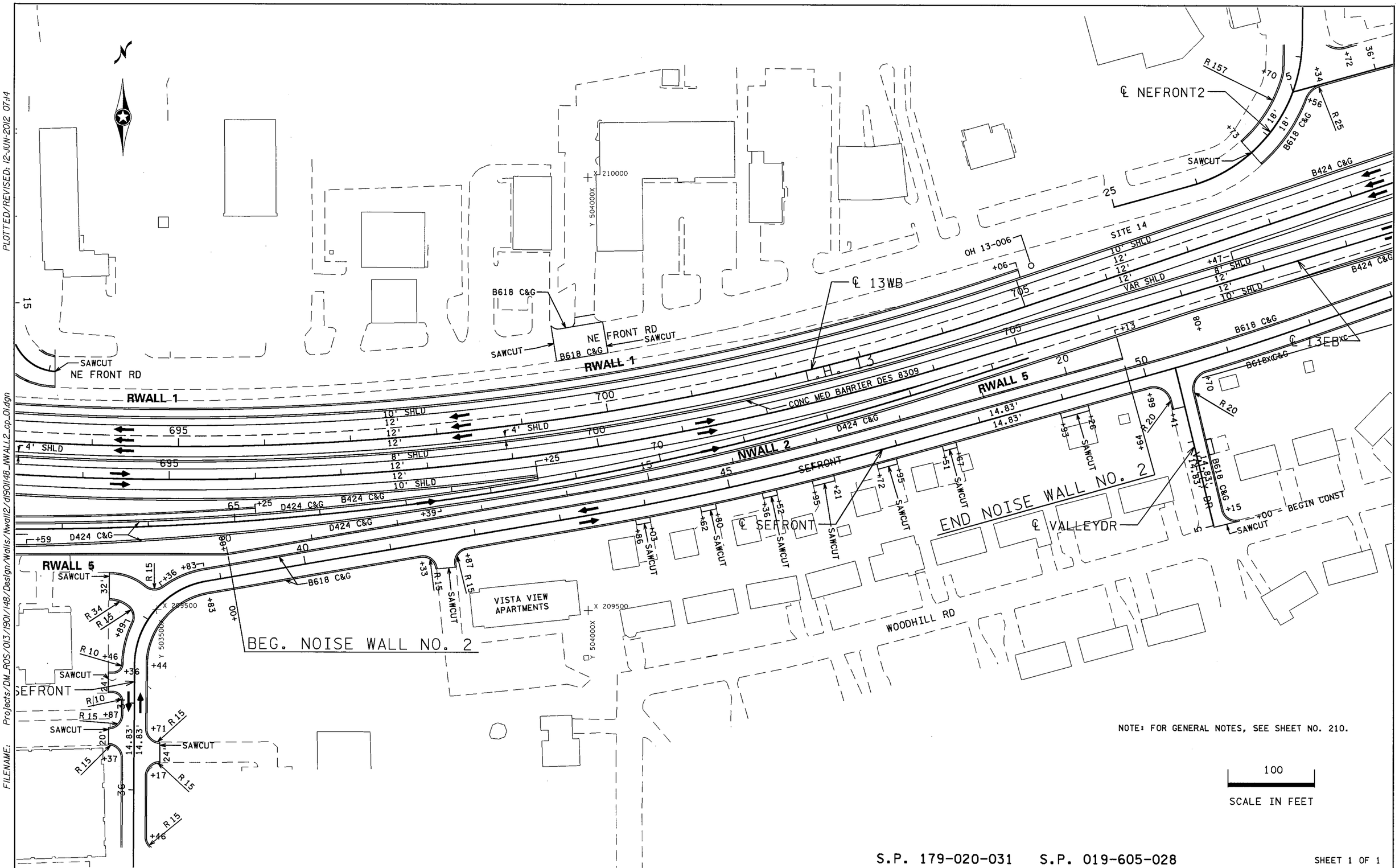

NOTE: FOR GENERAL NOTES, SEE SHEET NO. 210.

100

SCALE IN FEET

S.P. 179-020-031 S.P. 019-605-028

SHEET 1 OF 1

NOISE WALL 2 - PLAN

DRAWN BY: CT	CHECKED BY: HS	CERTIFIED BY _____ LICENSED PROFESSIONAL ENGINEER LIC. NO. 18520 DATE 6/18/12	STATE PROJ. NO. 1901-148 (T.H. 13) SHEET NO. 361 OF 442 SHEETS

DISTRICT #: METRO
IPLOT NAME: d190148_NWALL2_cp_01
FILENAME: Projects/DM_ROS/013/190l/148/Design/Walls/Nwall2/d190l48_NWALL2_cp_01.dgn
PLOTTED/REVISED: 12-JUN-2012 07:14

NOTES

- WHERE CHANGES IN ELEVATION OCCUR AT THE TOP OF THE CONCRETE PARAPET, A NOISE BARRIER POST IS TO BE LOCATED ON THE LOW SIDE OF THE STEP. ADJUST NOISE BARRIER POST SPACING BETWEEN STEPS TO ACCOMMODATE POST SPACING NO GREATER THAN 8'-0" ON CENTER. WOOD PLANK PANELS MAY SPAN ACROSS CONSTRUCTION JOINTS. SEE FRONT ELEVATION VIEW ON RETAINING WALL 5 DETAIL SHEET NO. 364.

- ALL PLANKING TO BE PLACED ON THE FILL OR RESIDENCE SIDE.

- FOR NOISE WALL CAP DETAILS, SEE SHEET NO. 365. CAP SHALL BE CONSIDERED INCIDENTAL.

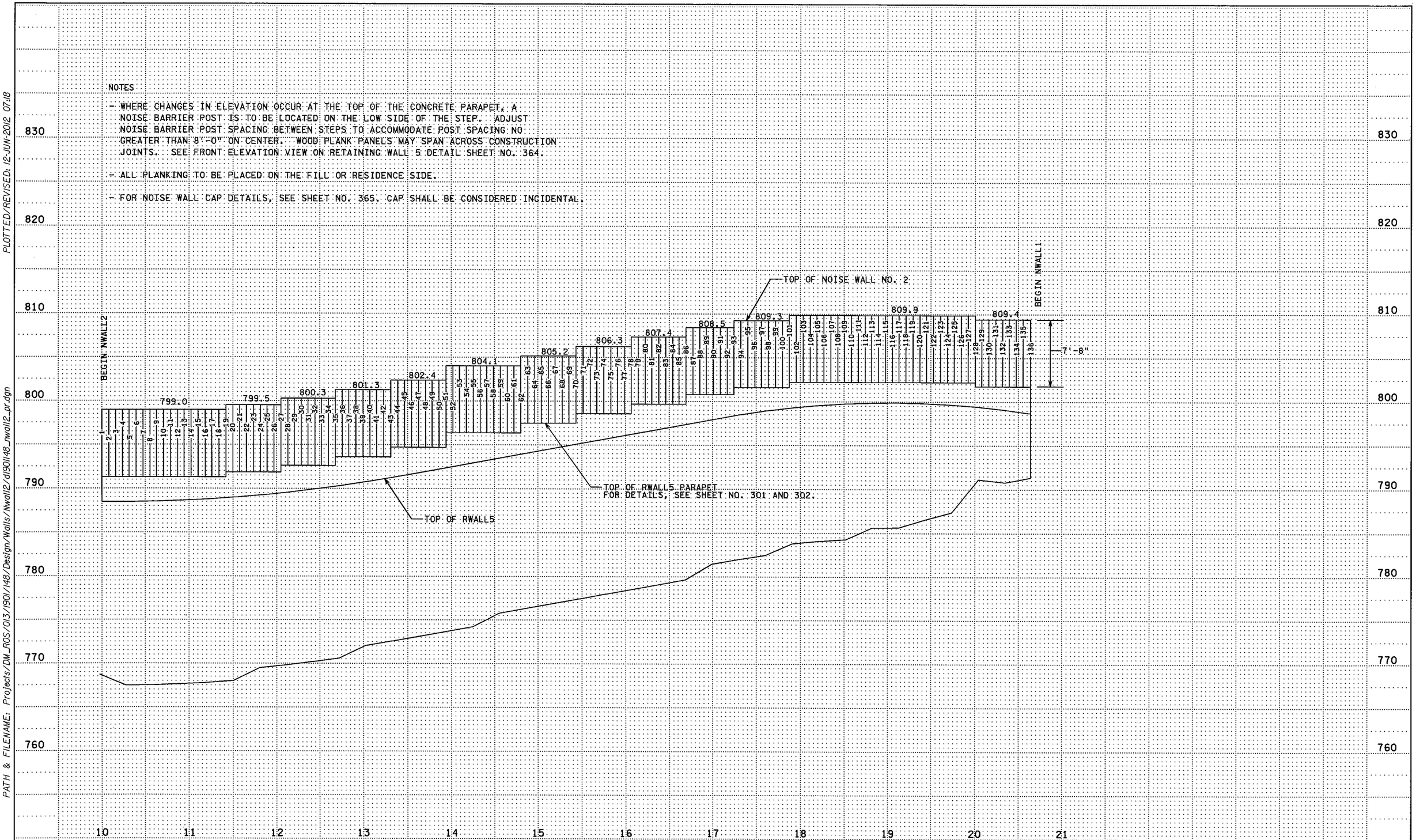

S.P. 179-020-031 S.P. 019-605-028

DRAWN BY: GJ	CHECKED BY: HS	CERTIFIED BY LICENSED PROFESSIONAL ENGINEER	LIC. NO. 18520 DATE 6/18/12	**NOISE WALL NO. 2 PROFILE** 1 OF 1
				STATE PROJ. NO. 1901-148 (T.H. 13) SHEET NO. 362 OF 442 SHEETS

PLOTTED/REVISED: 12-JUN-2012 07:18
DISTRICT #: METRO
IPLOT NAME: d1901148_nwall2_pr
PATH & FILENAME: Projects/DM_ROS/013/1901/148/Design/Walls/Nwall2/d1901148_nwall2_pr.dgn

NOISE WALL NO. 2 — CC

POST NO. ①	WALL STATION (FT.)	TOP OF NOISE WALL ELEV.	TOP OF RWALL 5 PARAPET ELEV.	POST HEIGHT (FT.)	TOTAL PLANKING AREA (SQ.FT.)	NOTES
INTERCHANGE QUANTITIES						
1	10+00.00	798.98	791.31	7.67	61.36	
2	10+08.00	798.98	791.31	7.67	61.36	
3	10+16.00	798.98	791.31	7.67	61.36	
4	10+24.00	798.98	791.31	7.67	57.53	
5	10+31.50	798.98	791.31	7.67	61.36	
6	10+39.50	798.98	791.31	7.67	61.36	
7	10+47.50	798.98	791.31	7.67	61.36	
8	10+55.50	798.98	791.31	7.67	57.53	
9	10+63.00	798.98	791.31	7.67	61.36	
10	10+71.00	798.98	791.31	7.67	61.36	
11	10+79.00	798.98	791.31	7.67	61.36	
12	10+87.00	798.98	791.31	7.67	57.53	
13	10+94.50	798.98	791.31	7.67	61.36	
14	11+02.50	798.98	791.31	7.67	61.36	
15	11+10.50	798.98	791.31	7.67	61.36	
16	11+18.50	798.98	791.31	7.67	57.53	
17	11+26.00	798.98	791.31	7.67	61.36	
18	11+34.00	798.98	791.31	7.67	61.36	
19	11+42.00	799.52	791.85	8.21	61.36	
20	11+50.00	799.52	791.85	7.67	57.52	
21	11+57.50	799.52	791.85	7.67	61.36	
22	11+65.50	799.52	791.85	7.67	61.36	
23	11+73.50	799.52	791.85	7.67	61.36	
24	11+81.50	799.52	791.85	7.67	57.52	
25	11+89.00	799.52	791.85	7.67	61.36	
26	11+97.00	799.52	791.85	7.67	61.36	
27	12+05.00	800.29	792.62	8.43	61.36	
28	12+13.00	800.29	792.62	7.67	57.52	
29	12+20.50	800.29	792.62	7.67	61.36	
30	12+28.50	800.29	792.62	7.67	61.36	
31	12+36.50	800.29	792.62	7.67	61.36	
32	12+44.50	800.29	792.62	7.67	57.52	
33	12+52.00	800.29	792.62	7.67	61.36	
34	12+60.00	800.29	792.62	7.67	61.36	
35	12+68.00	801.27	793.6	8.64	61.36	
36	12+76.00	801.27	793.6	7.67	57.52	
37	12+83.50	801.27	793.6	7.67	61.36	
38	12+91.50	801.27	793.6	7.67	61.36	
39	12+99.50	801.27	793.6	7.67	61.36	
40	13+07.50	801.27	793.6	7.67	57.52	
41	13+15.00	801.27	793.6	7.67	61.36	
42	13+23.00	801.27	793.6	7.67	61.36	
43	13+31.00	802.37	794.7	8.76	61.36	
44	13+39.00	802.37	794.7	7.67	57.52	
45	13+46.50	802.37	794.7	7.67	61.36	
46	13+54.50	802.37	794.7	7.67	61.36	

NOISE WALL NO. 2 — CC

POST NO.	WALL STATION (FT.)	TOP OF NOISE WALL ELEV.	TOP OF RWALL 5 PARAPET ELEV.	POST HEIGHT (FT.)	TOTAL PLANKING AREA (SQ.FT.)	NOTES
INTERCHANGE QUANTITIES						
47	13+62.50	802.37	794.7	7.67	61.36	
48	13+70.50	802.37	794.7	7.67	57.52	
49	13+78.00	802.37	794.7	7.67	61.36	
50	13+86.00	802.37	794.7	7.67	61.36	
51	13+94.00	804.07	796.4	9.31	61.36	
52	14+02.00	804.07	796.4	7.67	57.53	
53	14+09.50	804.07	796.4	7.67	61.36	
54	14+17.50	804.07	796.4	7.67	61.36	
55	14+25.50	804.07	796.4	8.79	61.36	
56	14+33.50	804.07	796.4	7.67	57.53	
57	14+41.00	804.07	796.4	7.67	61.36	
58	14+49.00	804.07	796.4	7.67	61.36	
59	14+57.00	804.07	796.4	7.67	61.36	
60	14+65.00	804.07	796.4	7.67	57.53	
61	14+72.50	804.07	796.4	7.67	61.36	
62	14+80.50	805.17	797.5	7.67	61.36	
63	14+88.50	805.17	797.5	7.67	61.36	
64	14+96.50	805.17	797.5	7.67	57.52	
65	15+04.00	805.17	797.5	7.67	61.36	
66	15+12.00	805.17	797.5	7.67	61.36	
67	15+20.00	805.17	797.5	7.67	61.36	
68	15+28.00	805.17	797.5	7.67	57.52	
69	15+35.50	805.17	797.5	7.67	61.36	
70	15+43.50	806.27	798.6	8.76	61.36	
71	15+51.50	806.27	798.6	7.67	61.36	
72	15+59.50	806.27	798.6	7.67	57.52	
73	15+67.00	806.27	798.6	7.67	61.36	
74	15+75.00	806.27	798.6	7.67	61.36	
75	15+83.00	806.27	798.6	7.67	61.36	
76	15+91.00	806.27	798.6	7.67	57.52	
77	15+98.50	806.27	798.6	7.67	61.36	
78	16+06.50	807.37	799.7	8.76	61.36	
79	16+14.50	807.37	799.7	7.67	61.36	
80	16+22.50	807.37	799.7	7.67	57.52	
81	16+30.00	807.37	799.7	7.67	61.36	
82	16+38.00	807.37	799.7	7.67	61.36	
83	16+46.00	807.37	799.7	7.67	61.36	
84	16+54.00	807.37	799.7	7.67	57.52	
85	16+61.50	807.37	799.7	7.67	61.36	
86	16+69.50	808.47	800.8	8.75	61.36	
87	16+77.50	808.47	800.8	7.67	61.36	
88	16+85.50	808.47	800.8	7.67	57.53	
89	16+93.00	808.47	800.8	7.67	61.36	
90	17+01.00	808.47	800.8	7.67	61.36	
91	17+09.00	808.47	800.8	7.67	61.36	
92	17+17.00	808.47	800.8	7.67	57.53	

NOISE WALL NO. 2 — CC

POST NO.	WALL STATION (FT.)	TOP OF NOISE WALL ELEV.	TOP OF RWALL 5 PARAPET ELEV.	POST HEIGHT (FT.)	TOTAL PLANKING AREA (SQ.FT.)	NOTES
INTERCHANGE QUANTITIES						
93	17+24.50	809.27	801.6	8.48	61.36	
94	17+32.50	809.27	801.6	7.67	61.36	
95	17+40.50	809.27	801.6	7.67	61.36	
96	17+48.50	809.27	801.6	7.67	57.52	
97	17+56.00	809.27	801.6	7.67	61.36	
98	17+64.00	809.27	801.6	7.67	61.36	
99	17+72.00	809.27	801.6	7.67	61.36	
100	17+80.00	809.27	801.6	7.67	57.52	
101	17+87.50	809.87	802.2	8.28	61.36	
102	17+95.50	809.87	802.2	7.67	61.36	
103	18+03.50	809.87	802.2	7.67	61.36	
104	18+11.50	809.87	802.2	7.67	57.52	
105	18+19.00	809.87	802.2	7.67	61.36	
106	18+27.00	809.87	802.2	7.67	61.36	
107	18+35.00	809.87	802.2	7.67	61.36	
108	18+43.00	809.87	802.2	7.67	57.52	
109	18+50.50	809.87	802.2	7.67	61.36	
110	18+58.50	809.87	802.2	7.67	61.36	
111	18+66.50	809.87	802.2	7.67	61.36	
112	18+74.50	809.87	802.2	7.67	57.52	
113	18+82.00	809.87	802.2	7.67	61.36	
114	18+90.00	809.87	802.2	7.67	61.36	
115	18+98.00	809.87	802.2	7.67	61.36	
116	19+06.00	809.87	802.2	7.67	57.52	
117	19+13.50	809.87	802.2	7.67	61.36	
118	19+21.50	809.87	802.2	7.67	61.36	
119	19+29.50	809.87	802.2	7.67	61.36	
120	19+37.50	809.87	802.2	7.67	57.52	
121	19+45.00	809.87	802.2	7.67	61.36	
122	19+53.00	809.87	802.2	7.67	61.36	
123	19+61.00	809.87	802.2	7.67	61.36	
124	19+69.00	809.87	802.2	7.67	57.52	
125	19+76.50	809.87	802.2	7.67	61.36	
126	19+84.50	809.87	802.2	7.67	61.36	
127	19+92.50	809.87	802.2	7.67	61.36	
128	20+00.50	809.87	802.2	8.13	57.52	
129	20+08.00	809.41	801.74	7.67	61.36	
130	20+16.00	809.41	801.74	7.67	61.36	
131	20+24.00	809.41	801.74	7.67	61.36	
132	20+32.00	809.41	801.74	7.67	57.52	
133	20+39.50	809.41	801.74	7.67	61.36	
134	20+47.50	809.41	801.74	7.67	61.36	
135	20+55.50	809.41	801.74	7.67	61.36	
136	20+63.50	809.41	801.74	7.67	30.68	
137	20+67.50	809.41	801.74	7.67		
INTERCHANGE QUANTITIES TOTALS				1062	8188	

NOTES

① WHERE CHANGES IN ELEVATION OCCUR AT THE TOP OF THE CONCRETE PARAPET, A NOISE BARRIER POST IS TO BE LOCATED ON THE LOW SIDE OF THE STEP. ADJUST NOISE BARRIER POST SPACING BETWEEN STEPS TO ACCOMMODATE POST SPACING NO GREATER THAN 8'-0" ON CENTER. WOOD PLANK PANELS MAY SPAN ACROSS CONSTRUCTION JOINTS. SEE FRONT ELEVATION VIEW ON RETAINING WALL 5 DETAIL SHEET NO. 364.

S.P. 179-020-031 S.P. 019-605-028

SHEET 1 OF 1

NOISE WALL NO. 2 TABULATIONS

DRAWN BY: CT | CHECKED BY: HS | CERTIFIED BY _____ LICENSED PROFESSIONAL ENGINEER LIC. NO. 18520 DATE 6/18/12

STATE PROJ. NO. 1901-148 (T.H. 13) SHEET NO. 363 OF 442 SHEETS

DISTRICT #: METRO
IPLOT NAME: d1901148_NWALL2_tab2
FILENAME: Projects/DM_ROS/013/1901/148/Design/Walls/Nwall2/d1901148_NWALL2_tab2.dgn
PLOTTED/REVISED: 12-JUN-2012 07:21

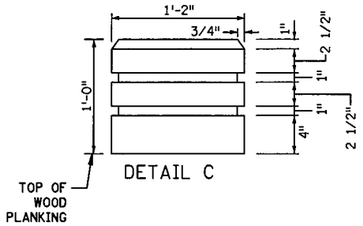

DETAIL C

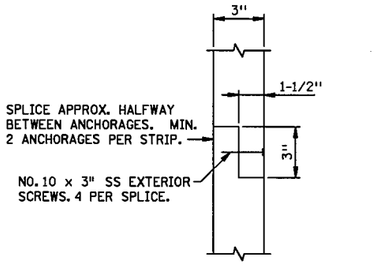

NAILER STRIP SPLICE DETAIL

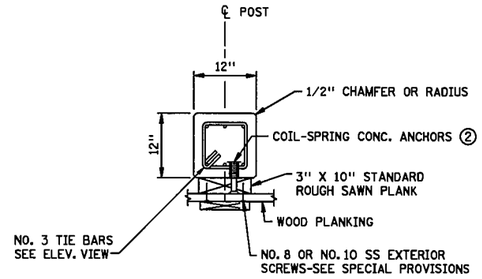

POST SECTION DETAIL

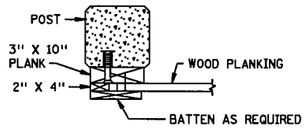

SECTION B-B

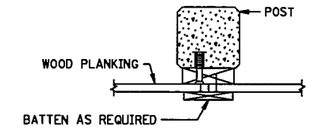

SECTION C-C

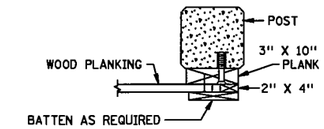

SECTION D-D

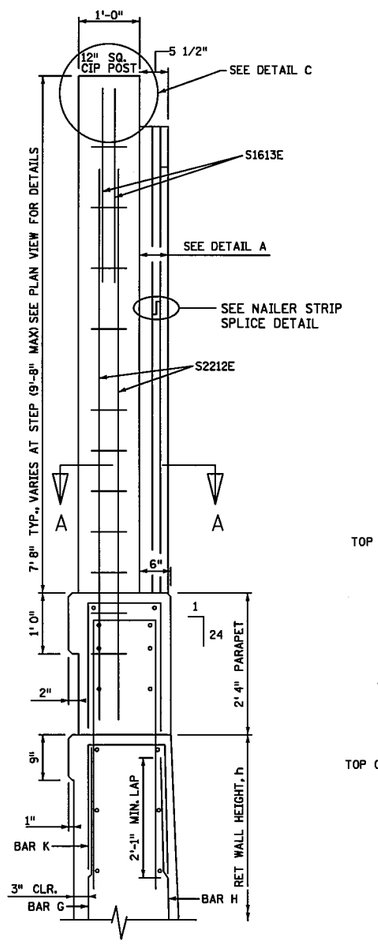

WALL SECTION

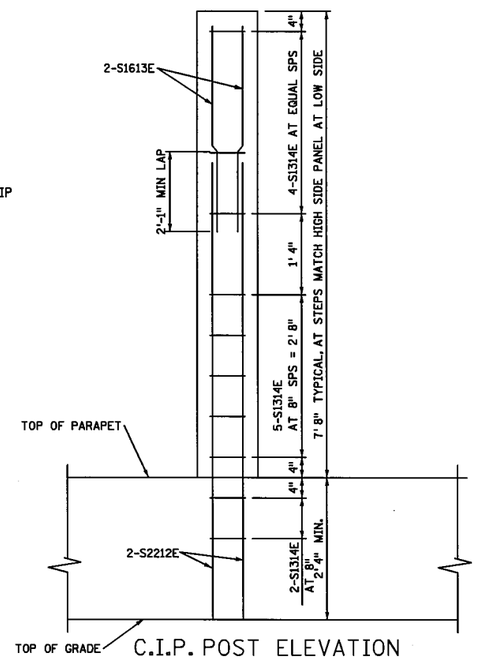

C.I.P. POST ELEVATION

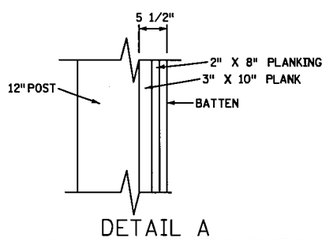

DETAIL A
NOISE WALL COMPONENTS

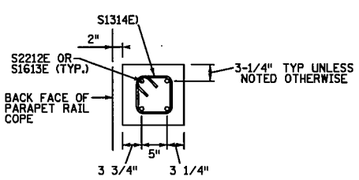

SECTION A-A

DESIGN CRITERIA:

WIND LOAD = 25 P.S.F.
f_b = 4000 P.S.I. CONCRETE POSTS.
f_b = 1400 P.S.I. WOOD PLANKING.
f_b = 1200 P.S.I. ALL OTHER WOOD MEMBERS.

STRESS LEVEL SYMBOL
PER AITC-117-(LATEST ADDITION):
24F = 2400 PSI ALLOWABLE BENDING STRESS
20F = 2000 PSI ALLOWABLE BENDING STRESS

NOTES:

THE FINISHED WIDE FACE DIMENSION FOR THE 2" BATTENS SHALL BE THE SAME AS THE FINISHED WIDE FACE DIMENSION FOR THE 2" PLANKS.

BUGLE HEAD, STAINLESS STEEL, EXTERIOR, COARSE THREAD SCREWS AS SHOWN. SEE SPECIAL PROVISIONS.

SEE SPEC. 2554 FOR ADDITIONAL CONST. INFORMATION, UNLESS OTHERWISE NOTED.

ALL REINF. BARS SHALL BE EPOXY COATED GRADE 60 PER SPEC. 3301 AND HAVE A MIN. 2" CLEAR UNLESS OTHERWISE NOTED.

NOTES

① 1" MIN. DISTANCE FROM EDGE OR END OF PLANK.

② SPACE AT 4'-0" ON OPPOSITE SIDES OF POST ℄. ULTIMATE PULL-OUT 2.25 kips PER ANCHOR.

③ SEE RETAINING WALL PROFILES FOR CONCRETE POST LOCATIONS.

④ SEE PANEL TABULATIONS FOR NOISE WALL CONCRETE POST DOWELS TO RETAINING WALL. CONCRETE NOISE WALL POSTS TO BE INCIDENTAL.

⑤ WHERE CHANGES IN ELEVATION OCCUR AT THE TOP OF THE CONCRETE PARAPET, A NOISE BARRIER POST IS TO BE LOCATED ON THE LOW SIDE OF THE STEP. ADJUST NOISE BARRIER POST SPACING BETWEEN STEPS TO ACCOMMODATE POST SPACING NO GREATER THAN 8'-0" ON CENTER. WOOD PLANK PANELS MAY SPAN ACROSS CONSTRUCTION JOINTS. SEE FRONT ELEVATION VIEW ON RETAINING WALL 5 DETAIL SHEET.

⑥ CONCRETE REFLECTS 7'-8" TALL POST WITHOUT CAP. CONCRETE QUANTITY VARIES AT VARIABLE HEIGHT POST.

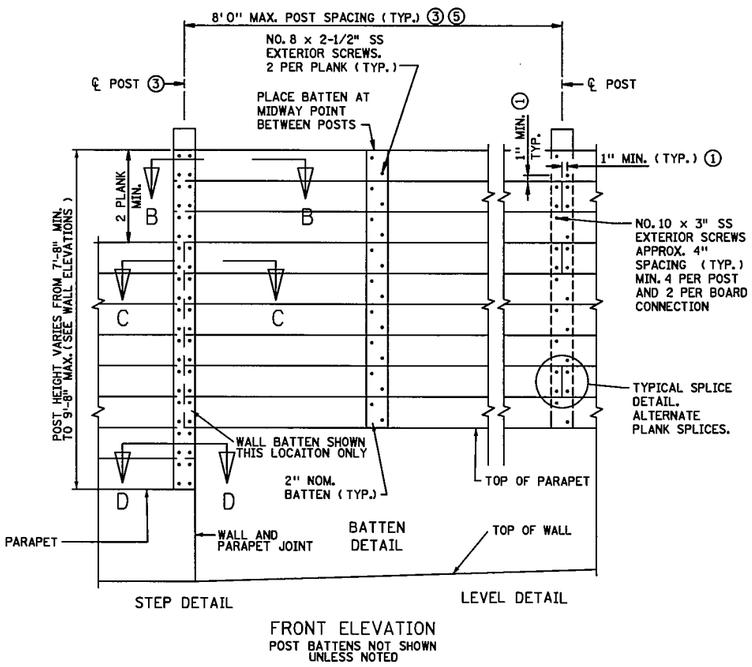

FRONT ELEVATION
POST BATTENS NOT SHOWN UNLESS NOTED

BILL OF REINFORCEMENT				
TYPICAL NOISEWALL POST ON RETAINING WALL				
BAR MARK	NO.	LENGTH	SHAPE	LOCATION
S2212E	4	9' 8"	STR.	POST VERTICAL
S1613E	4	6' 0"	STR.	POST VERTICAL
S1314E	11	3' 5"	STR.	POST TIE
NOISEWALL POST CONC. (3Y46)				REINFORCEMENT BARS (EPOXY)
.28 CU YD ⑥				126 POUND

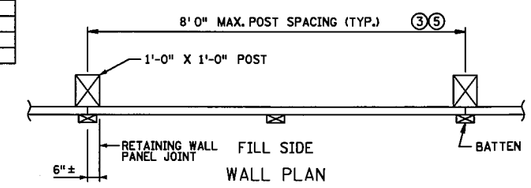

WALL PLAN

I HEREBY CERTIFY THAT SHEETS 364 HAVE BEEN PREPARED BY ME OR UNDER MY DIRECT SUPERVISION AND I AM A DULY LICENSED PROFESSIONAL ENGINEER UNDER THE LAWS OF THE STATE OF MINNESOTA.

Khalid M. Obeidat
KHALID OBEIDAT

DATE 6/18/12 LIC. NO. 41868

S.P. 179-020-031 S.P. 019-605-028

NOISE WALL 2 DETAILS

STATE PROJ. NO. 1901-148 (T.H. 13) SHEET NO. 364 OF 442 SHEETS

DRAWN BY: RN | CHECKED BY: HS

PLOTTED/REVISED: 13-JUN-2012 09:16
DISTRICT #: METRO
IPLOT NAME: d1901148_rw5_dtl
FILENAME: Projects/DM_ROS/013/1901/148/Design/Walls/RW5/d1901148_rw5_dtl.dgn

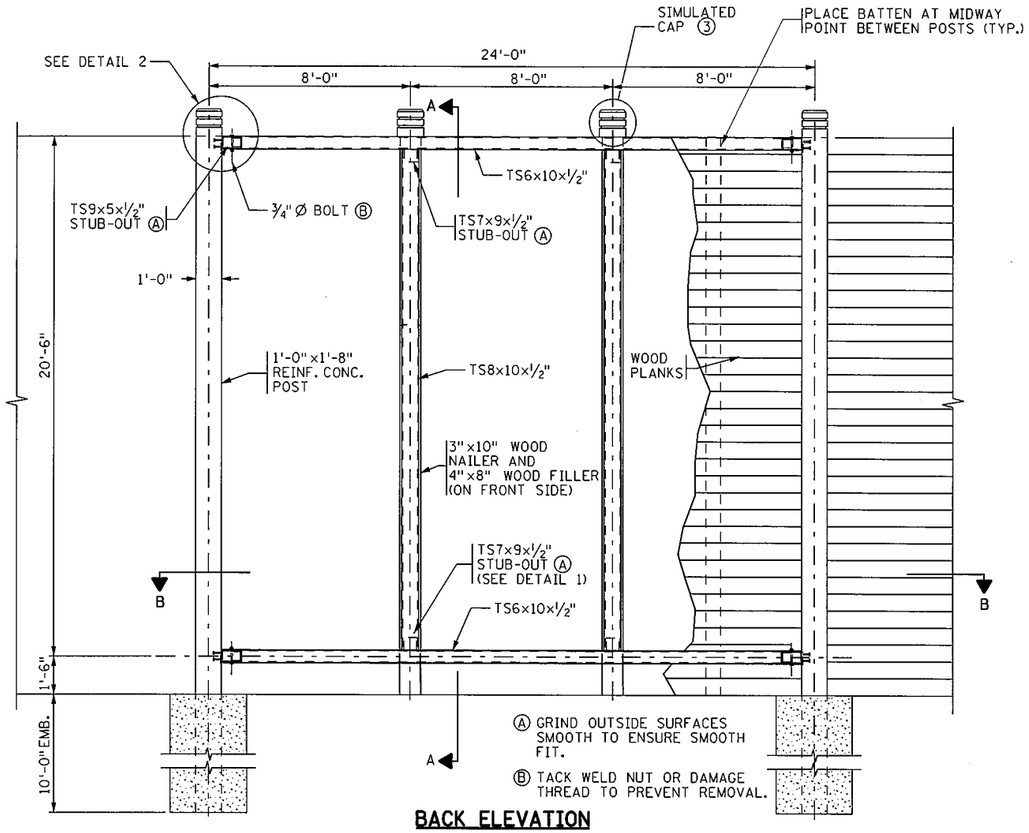

BACK ELEVATION

NOISE WALL - 24'-0" SPACING ②

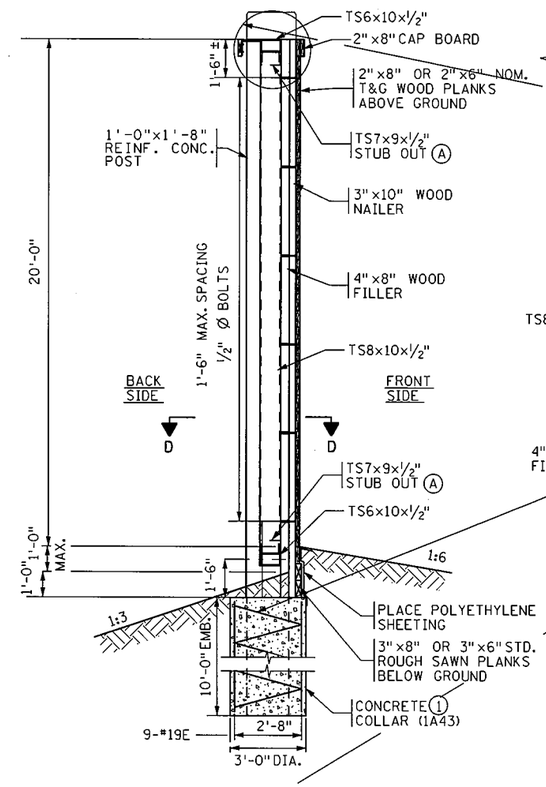

SECTION A-A

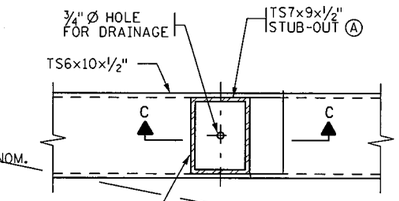

DETAIL 1

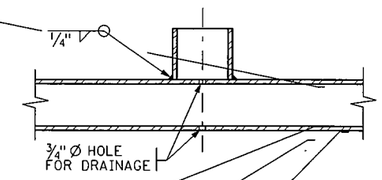

SECTION C-C

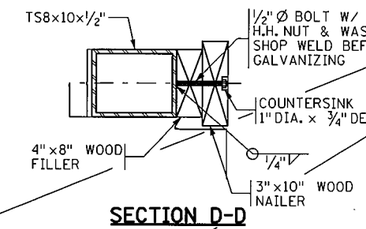

SECTION D-D

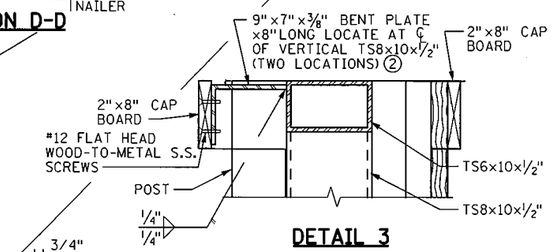

DETAIL 3

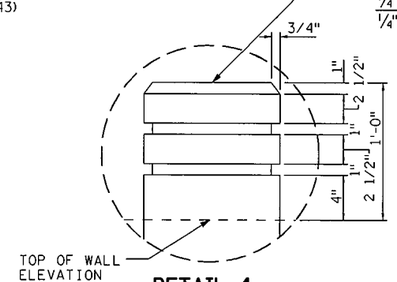

DETAIL 4

NOTE:

① CONCRETE COLLAR SHALL CONFORM TO MnDOT SPEC 1A43.

② DESIGN BASED ON 24' SPAN LENGTH. ADJUST DESIGN AS NECESSARY FOR 16' SPAN LENGTH.

③ ATTACH SIMULATED CAP TO HORIZONTAL TUBE SECTION ABOVE VERTICAL TUBE SECTIONS AS SHOWN.

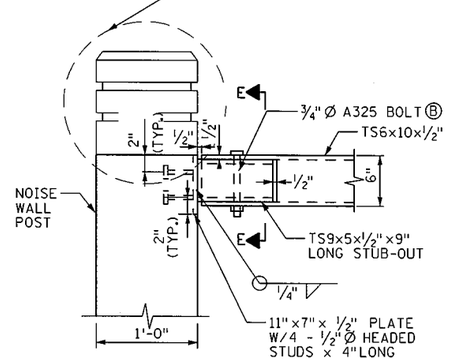

DETAIL 2

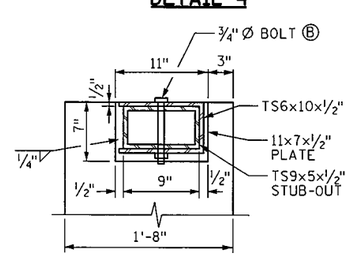

SECTION E-E

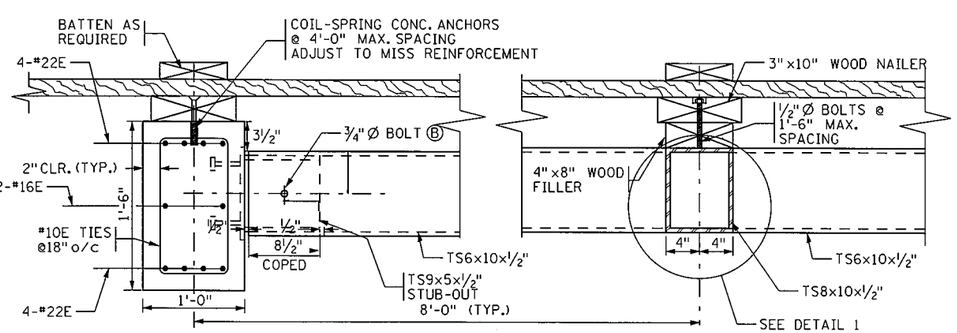

SECTION B-B

GENERAL NOTES:

- STRUCTURAL TUBING SHALL CONFORM TO ASTM A500-GRADE B.
- ALL STEEL SHALL BE PAINTED TO MATCH CONCRETE POSTS. SEE SPECIAL PROVISIONS.
- ALL REINFORCEMENT BARS SHALL BE EPOXY COATED GRADE 60 AND HAVE A MIN. 2" CLEAR, UNLESS OTHERWISE NOTED.
- SEE SPECIAL PROVISIONS FOR COLOR SPECIFICATIONS.
- PIPE AND PIPE SLEEVES SHALL COMPLY WITH 3362. PIPE AND TUBING SECTIONS SHALL BE GALVANIZED. GALVANIZE OTHER MATERIAL IN ACCORDANCE WITH 3394 AFTER FABRICATION.

S.P. 179-020-031 S.P. 019-605-028

NOISE WALL CAP DETAILS

DRAWN BY: MS	CHECKED BY: HS	CERTIFIED BY [signature] LICENSED PROFESSIONAL ENGINEER	LIC. NO. 18520 DATE 6/18/12	STATE PROJ. NO. 1901-148 (T.H. 13)	SHEET NO. 365 OF 442 SHEETS

PLOTTED/REVISED: 12-JUN-2012 07:25
DISTRICT #: METRO
IPLOT NAME: C278228I_PMDF
PATH & FILENAME: Projects/DM_ROS/013/1901/148/Design/Walls/Nwalll/C278228I_PMDF.dgn

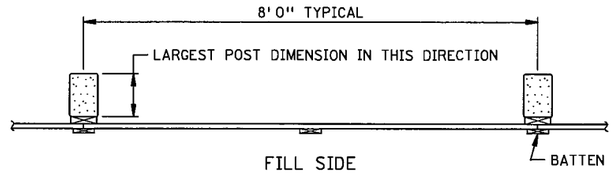

WALL TYPE NO. 1 ①

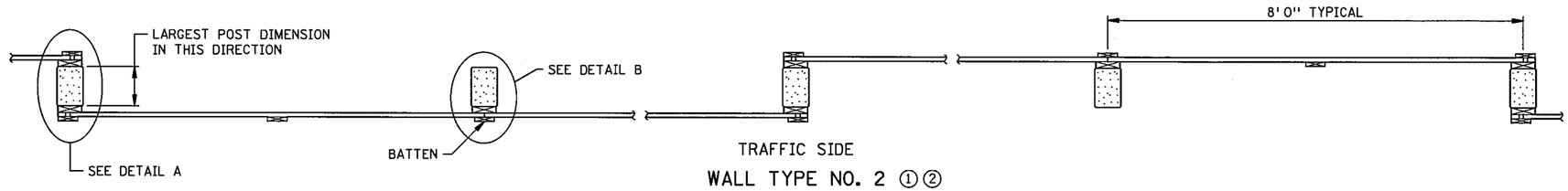

WALL TYPE NO. 2 ①②

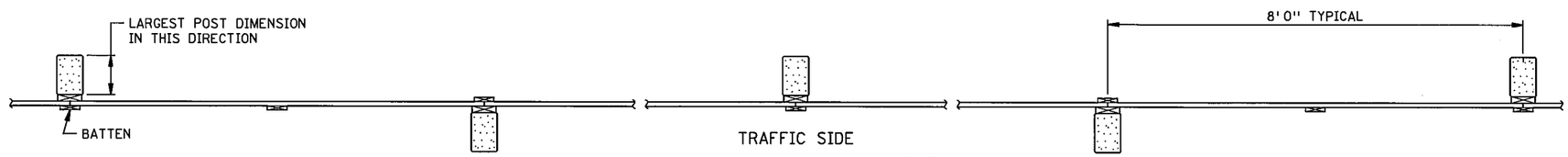

WALL TYPE NO. 3 ①②

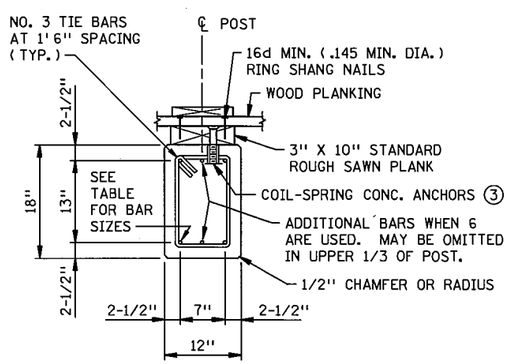

REINFORCED

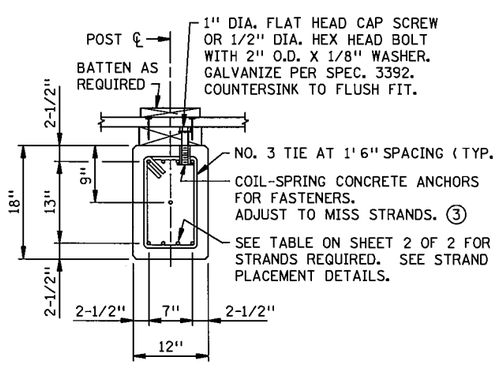

PRESTRESSED

POST DETAILS

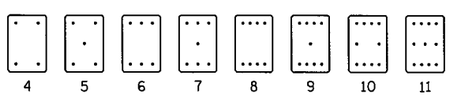

STRAND PLACEMENT DETAILS

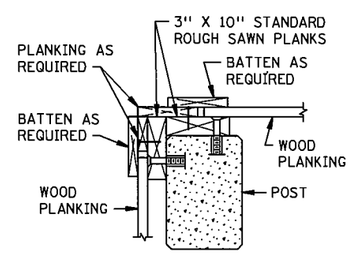

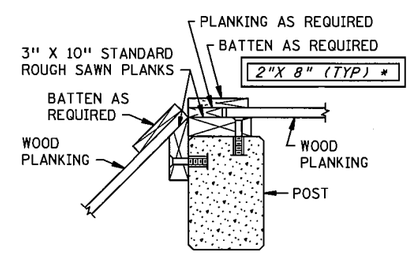

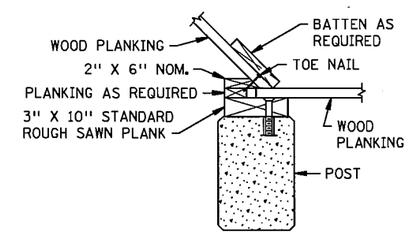

POST LOCATIONS FOR ANGLE TURNS

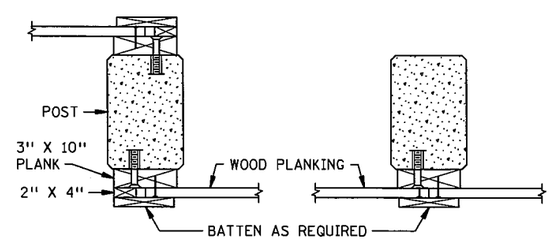

DETAIL A DETAIL B

NOTES:

① SEE SHEET(S) 357 FOR WALL TYPE REQUIRED.

② TYPE NO. 2 AND 3 SHALL BE USED IN NON-FILL CONDITIONS ONLY.

③ SPACE AT 4' 0" ON ALTERNATE SIDES OF POST ℄. ULTIMATE PULL-OUT 2.25K PER ANCHOR.

* DENOTES MODIFICATION FROM STANDARD PLAN

I HEREBY CERTIFY THAT THIS PLAN SHEET WAS PREPARED BY ME OR UNDER MY DIRECT SUPERVISION AND THAT I AM A DULY LICENSED PROFESSIONAL ENGINEER UNDER THE LAWS OF THE STATE OF MINNESOTA.

ENGINEER _____ LIC. NO. 18520

MODIFIED S.P. 179-020-031 S.P. 019-605-028 2 OF 3

STANDARD SHEET NO. 5-297.661 (1 OF 2)

STANDARD APPROVED: JANUARY 4, 1994

TITLE: WOOD PLANKING NOISE BARRIER WITH CONCRETE POSTS

STATE PROJ. NO. 1901-148 (TH 13) SHEET NO. 366 OF 442 SHEETS

PLOTTED/REVISED: 30-JUL-2012 11:00

DISTRICT #: METRO

USER NAME: s661_l_spn

PATH & FILENAME: Projects/DM_ROS/013/1901/148/Design/Walls/Nwalll/s661_l_spn.dgn

FILE NAME: s661_l_spn

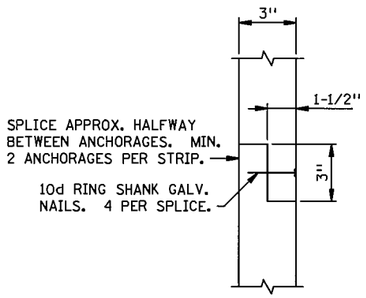

NAILER STRIP SPLICE DETAIL

FILL HEIGHT W = 0' TO 1'

"H" WALL HEIGHT (FT.)	POST SPACING (FT.)	POST SIZE (IN.)	REINF. BARS	PRE-STRESSED STRANDS	POST EMBEDMENT			
					LEVEL GROUND	2:1 SLOPE	3:1 SLOPE	4:1 SLOPE
5	8	12 X 18	4 NO. 4	4	5'0"	8'0"	7'0"	6'0"
6	8	12 X 18	4 NO. 4	4	6'0"	9'0"	8'0"	7'0"
7	8	12 X 18	4 NO. 4	4	6'0"	9'0"	8'0"	8'0"
8	8	12 X 18	4 NO. 4	4	7'0"	10'0"	9'0"	8'0"
9	8	12 X 18	4 NO. 4	4	7'0"	11'0"	10'0"	9'0"
10	8	12 X 18	4 NO. 4	4	8'0"	11'0"	10'0"	9'0"
11	8	12 X 18	4 NO. 5	4	8'0"	12'0"	11'0"	10'0"
12	8	12 X 18	4 NO. 5	4	8'0"	12'0"	11'0"	10'0"
13	8	12 X 18	4 NO. 5	4	9'0"	13'0"	11'0"	10'0"
14	8	12 X 18	4 NO. 5	4	9'0"	13'0"	11'0"	10'0"
15	8	12 X 18	6 NO. 5	4	9'0"	13'0"	11'0"	11'0"
16	8	12 X 18	6 NO. 5	4	9'0"	14'0"	12'0"	11'0"
17	8	12 X 18	6 NO. 5	4	10'0"	14'0"	12'0"	11'0"
18	8	12 X 18	6 NO. 6	4	10'0"	15'0"	13'0"	12'0"
19	8	12 X 18	6 NO. 6	5	10'0"	15'0"	13'0"	12'0"
20	8	12 X 18	6 NO. 6	5	10'0"	15'0"	13'0"	12'0"
21	8	12 X 18	6 NO. 6	6	11'0"	16'0"	14'0"	13'0"
22	8	12 X 18	6 NO. 7	6	11'0"	16'0"	14'0"	13'0"
23	8	12 X 18	6 NO. 7	7	11'0"	17'0"	14'0"	13'0"
24	8	12 X 18	6 NO. 7	8	11'0"	17'0"	15'0"	14'0"
25	8	12 X 18	6 NO. 7	9	12'0"	17'0"	15'0"	14'0"

DESIGN CRITERIA:

ϕ = 30° (GRANULAR)
WIND LOAD = 23 P.S.F.
f_b = 4000 P.S.I. CONCRETE POSTS.
f_b = 1400 P.S.I. WOOD PLANKING.
f_b = 1200 P.S.I. ALL OTHER WOOD MEMBERS.

STRESS LEVEL SYMBOL
PER AITC-117-(LATEST ADDITION):
24F = 2400 PSI ALLOWABLE BENDING STRESS
20F = 2000 PSI ALLOWABLE BENDING STRESS

POST DESIGN CRITERIA

NO. OF STRANDS	f'cl (6)	f'c (5)
6 OR LESS	4000 PSI	5500 PSI
7 OR MORE	4000 PSI	6000 PSI

NOTES:

EMBEDMENT LENGTH IS BASED ON THE WATER TABLE BEING BELOW THE EMBEDMENT DEPTH OTHER CONDITIONS REQUIRE A SPECIAL DESIGN.

FOR SLOPES BETWEEN THOSE SHOWN, USE THE EMBEDMENTS FOR THE STEEPER SLOPE OR USE INTERPOLATION.

FOR SLOPES 6:1 OR FLATTER, USE LEVEL GROUND EMBEDMENT.

THE FINISHED WIDE FACE DIMENSION FOR THE ROUGH SAWN 3" PLANKS SHALL BE THE SAME AS THE FINISHED WIDE FACE DIMENSION FOR THE 2" PLANKS.

GALVANIZE NAILS PER SPEC. 3392. NAILING REQUIREMENTS SHOWN ARE BASED ON FULL HEAD NAILS AND ENTIRE LENGTH OF SHANK BEING DEFORMED. SEE SPECIAL PROVISIONS FOR POWER NAILS ALTERNATE.

SOIL TESTS AT 200 FT. INTERVALS SHALL BE REQUIRED AT EACH SITE LOCATION AND THE RESULTS REVIEWED BY THE SOILS ENGINEER FOR RECOMMENDATIONS.

SOIL TREATMENT AND BACKFILL SHALL CONFORM TO SPEC. 2451.

SEE SPEC. 2554 FOR ADDITIONAL CONST. INFORMATION, UNLESS OTHERWISE NOTED.

CONCRETE POSTS WITH THE SAME TOTAL LENGTH SHALL USE THE LARGEST NUMBER OF PRESTRESSED STRANDS REQUIRED FOR THAT POST LENGTH.

PRESTRESSED STEEL STRANDS ARE 1/2" DIA. (AREA = 0.153 SQ. IN.), MIN. OF 2 SPACES, 270 KIP ULTIMATE STRENGTH. INITIAL PRESTRESS EQUALS 28,900 LBS./STRAND.

STEEL STRANDS PER SPEC. 3348 AND PAINT THE EXPOSED ENDS OF THE STRANDS WITH AN APPROVED GRAY EPOXY.

ALL REINF. BARS SHALL BE EPOXY COATED GRADE 60 PER SPEC. 3301 AND HAVE A MIN. 2" CLEAR UNLESS OTHERWISE NOTED.

(1) EMBEDMENT DEPTHS IN THE TABLES ARE BASED ON A 3 FT. MIN. BERM IN FRONT OF THE WALL.

(2) WHEN THE CURB LINE IS CLOSER THAN 2:1 SLOPE, A SPECIAL DESIGN IS REQUIRED.

(3) 1" MIN. DISTANCE FROM EDGE OR END OF PLANK.

(4) USE THE POST SIZE AND EMBEDMENT FOR THE HIGHER WALL SECTION AT THE STEP.

(5) MINIMUM CONCRETE STRENGTH AT THE TIME OF PRESTRESS TRANSFER.

(6) MIN. CONCRETE STRENGTH THE POST CAN BE TRANSPORTED AND INSTALLED. THE CONCRETE SHALL BE PER SPEC. 2461.4A4b.

(7) SEE POST EMBEDMENT TABLES.

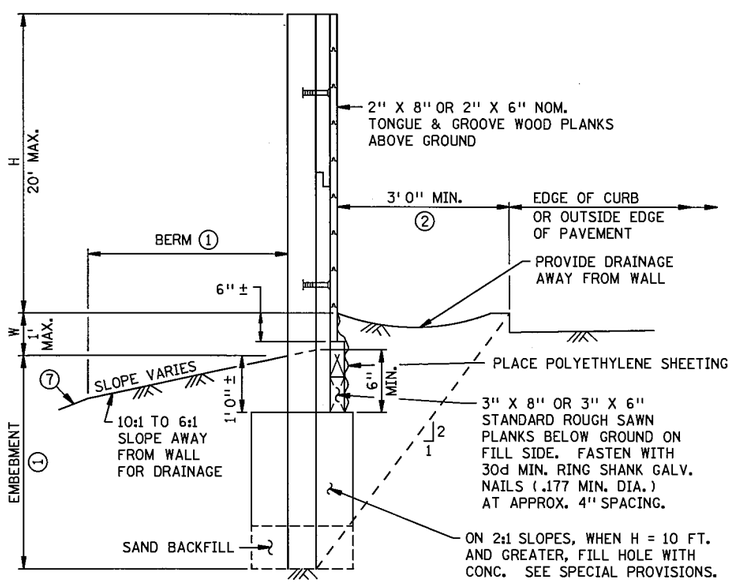

SECTION AT POST
WITH EARTH FILL

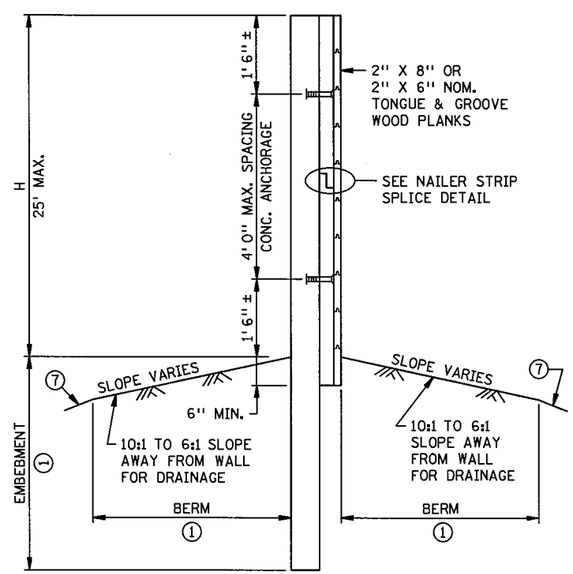

SECTION AT POST
WITHOUT EARTH FILL

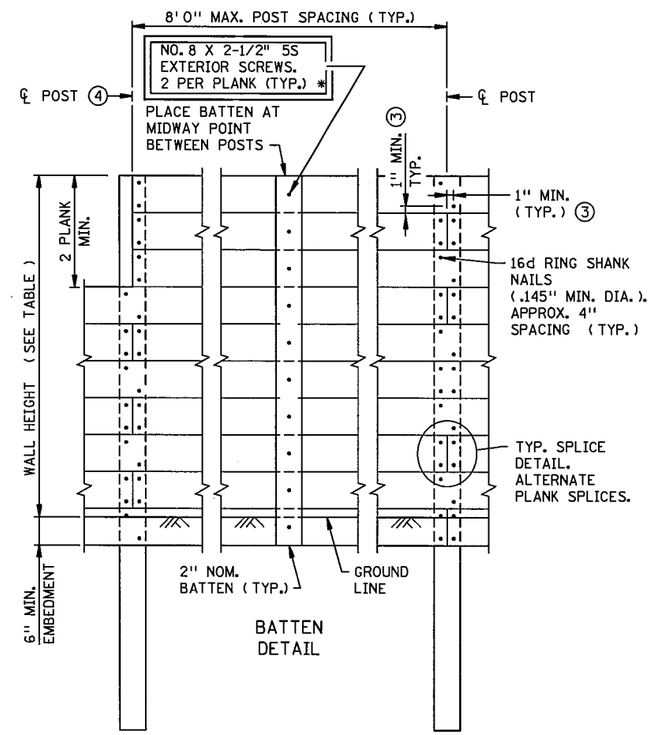

FRONT ELEVATION
POST BATTENS NOT SHOWN

S.P. 179-020-031 S.P. 019-605-028

3 OF 3

* DENOTES MODIFICATION FROM STANDARD PLAN MODIFIED

I HEREBY CERTIFY THAT THIS PLAN SHEET WAS PREPARED BY ME OR UNDER MY DIRECT SUPERVISION AND THAT I AM A DULY LICENSED PROFESSIONAL ENGINEER UNDER THE LAWS OF THE STATE OF MINNESOTA.

ENGINEER Bruce J. Stout LIC. NO. 18520 REVISION DATE 4-1-99

STANDARD SHEET NO. ~~5-297.661 (2 OF 2)~~
STANDARD APPROVED: ~~JANUARY 4, 1994~~

TITLE: WOOD PLANKING NOISE BARRIER WITH CONCRETE POSTS

STATE PROJ. NO. 1901-148 (TH 13) SHEET NO. 367 OF 442 SHEETS

PLOTTED/REVISED: 17-JUL-2012 09:32

DISTRICT #: METRO
USER NAME: s661_2_spn
PATH & FILENAME: Projects/DM_ROS/013/1901/148/Design/Walls/Nwall/s661_2_spn.dgn

FILE NAME: s661_2_spn

PLOTTED/REVISED: 13-JUN-2012 11:42

DISTRICT #: METRO
IPLOT NAME: d190l148_tbIndex
FILENAME: Projects/DM_ROS/013/1901/148/Design/PlanSheets/Tabulations/d190l148_tbdgn

DRAINAGE STRUCTURE INDEX

STRUCTURE NO.	PLAN VIEW SHEET NO.	PROFILE SHEET NO.
5001	374	377
5002	374	377
5003	374	377
5004	373	377
5005	373	377
5006	373	378
5007	373	378
5008	373	378
5009	373	378
5010	373	378
5011	373	378
5012	373	378
5013	373	379
5014	373	379
5015	372	379
5016	372	379
5017	372	379
5018	372	379
5019	372	379
5020	372	384
5021	372	384
5022	372	384
5023	372	384
5024	372	384
5025	372	384
5026	371	384
5027	371	384
5028	371	385
5029	371	385
5030	371	385
5031	373	382
5032	373	382
5033	373	382
5034	372	382
5035	372	382
5036	372	382
5037	372	385
5038	372	382
5039	372	382
5040	372	382
5041	372	382
5042	372	383
5043	371	383
5044	371	383
5045	371	383
5046	371	383
5047	371	383
5048	371	383
5049	371	383
5050	372	385
5051	372	385
5052	372	385
5053	372	385
5054	372	385
5055	372	385
5056	372	386
5057	372	386
5058	371	386
5059	371	386
5060	371	385
5061	372	386
5062	371	386
5063	371	386
5064	371	387
5065	371	387
5066	371	387
5067	371	387
5068	371	387

DRAINAGE STRUCTURE INDEX

STRUCTURE NO.	PLAN VIEW SHEET NO.	PROFILE SHEET NO.
5069	371	387
5070	371	393
5071	371	393
5072	371	393
5073	371	393
5074	371	393
5075	371	393
5076	371	393
5077	371	393
5078	370	390
5079	370	390
5080	370	390
5081	370	390
5082	370	390
5083	370	390
5084	370	390
5085	370	390
5087	370	390
5088	370	390
5089	371	389
5090	371	389
5091	371	389
5092	371	389
5093	371	389
5094	371	388
5095	371	388
5096	371	389
5097	371	389
5098	371	389
5099	371	389
5100	371	389
5101	373	380
5102	373	380
5103	372	380
5104	372	380
5105	372	379
5106	372	379
5107	372	379
5108	372	381
5109	372	381
5110	372	381
5111	372	381
5112	372	381
5113	372	381
5114	372	381
5115	372	381
5116	372	381
5117	372	392
5118	372	391
5119	372	391
5120	372	391
5121	372	392
5122	372	392
5123	371	391
5124	371	391
5125	371	391
5126	371	391
5127	371	391
5128	372	391
5129	372	391
5130	372	391
5131	372	392
5132	371	392
5133	371	392
5134	375	396
5135	375	396
5136	375	396
5137	375	396

DRAINAGE STRUCTURE INDEX

STRUCTURE NO.	PLAN VIEW SHEET NO.	PROFILE SHEET NO.
5138	375	396
5139	375	396
5140	375	396
5141	375	397
5142	375	397
5143	375	397
5144	375	397
5145	375	397
5146	375	394
5147	375	394
5148	371	394
5149	371	394
5150	371	394
5151	371	394
5152	371	394
5153	371	394
5154	371	394
5155	371	394
5156	371	394
5158	375	395
5159	375	395
5160	375	395
5161	375	395
5165	375	404
5166	375	404
5167	375	404
5169	375	395
5168	375	395
5170	375	395
5171	371	395
5172	375	395
5173	371	395
5174	371	395
5175	371	403
5177	371	403
5179	371	394
5181	375	396
5182	371	396
5183	371	398
5185	371	399
5186	371	398
5187	371	399
5190	371	398
5191	371	399
5192	371	398
5193	371	398
5194	371	398
5195	376	398
5196	376	398
5197	376	398
5198	376	398
5199	376	398
5200	376	400
5201	376	399
5202	376	399
5203	376	399
5204	376	399
5205	371	397
5206	371	397
5207	371	397
5208	371	397
5209	371	397
5210	371	397
5211	371	397
5212	371	397
5213	376	397
5214	371	400
5215	376	400

DRAINAGE STRUCTURE INDEX

STRUCTURE NO.	PLAN VIEW SHEET NO.	PROFILE SHEET NO.
5216	371	400
5217	371	400
5218	371	399
5219	371	399
5220	371	399
5221	371	399
5222	371	399
5223	371	399
5224	376	400
5225	371	388
5226	371	388
5227	371	388
5228	371	388
5229	371	388
5230	371	388
5231	371	388
5232	371	389
5233	371	389
5234	371	389
5235	376	401
5236	376	401
5237	376	401
5238	376	401
5239	376	401
5240	376	401
5250	376	401
5251	376	401
5252	376	401
5253	376	401
5254	376	401
5255	376	401
5257	376	402
5258	376	402
5259	376	402
5260	376	402
5261	376	402
5262	376	402
5263	376	402
5265	371	402
5266	371	402
5267	376	403
5268	376	403
5269	376	403
5270	376	403
5271	376	403
5272	376	403
5273	376	403
5274	372	380
5275	372	380
5276	372	380
5277	372	380
5278	372	380
5279	372	380
5280	372	381
5281	375	404
5282	375	404
5283	375	404
5284	375	404
5285	375	404
5287	375	404
5288	375	404
5289	375	404
5290	375	404
5291	375	404
5292	371	386
5293	371	386
5294	371	386
5295	371	386

DRAINAGE STRUCTURE INDEX

STRUCTURE NO.	PLAN VIEW SHEET NO.	PROFILE SHEET NO.
5296	372	386
5297	371	387
5298	371	387
5299	371	387
5300	371	387
5301	371	393
5302	370	393
5303	370	393
5304	370	393
5305	370	393
5306	370	393
5307	372	392
5308	372	392
5309	370	390
5310	369	402
5311	369	402
5313	376	403
5314	376	399
5315	371	403
5316	376	402
5317	370	390
5318	370	390
5320	373	378
5400	371	405
5401	371	405
5402	371	405
5403	371	405
5404	371	405
5405	371	405
5406	371	405
5407	371	405
5408	371	405
5409	376	406
5410	376	406
5411	376	406
5412	376	406
5413	376	406
5414	376	406
5415	376	406
5416	376	406
5417	376	406
5420	376	407
5421	376	407
6001	373	377
6002	373	377
6003	373	377
6005	373	378
6006	373	378
6007	372	380
6008	371	393
6010	373	374
6013	375	396
6014	375	395
6018	371	402
6020	372	381
6023	376	400
6024	376	401
6025	376	401
6026	371	403
6027	376	399
6028	376	399
6029	371	396
6085	370	390
6162	375	395
6163	371	395
6256	376	401
6264	376	402
6265	369	402

S.P. 179-020-031 S.P. 019-605-028

DRAINAGE STRUCTURE INDEX

DRAWN BY: MRS | CHECKED BY: HS | CERTIFIED BY _____ LICENSED PROFESSIONAL ENGINEER LIC. NO. 18520 DATE 6/18/12

STATE PROJ. NO. 1901-148 (T.H. 13) SHEET NO. 368 OF 442 SHEETS

DRAINAGE NOTES:

FOR DITCHES, SEE CROSS SECTION SHEETS.

ALL HIGH POINTS AND LOW POINTS ARE ON THE ROADWAY PROFILE GRADE.

FOR SWPPP NOTES, SEE SHEET NO. 428 TO 430.

WHEN SEDIMENT DEPOSITS IN A WATER OF THE STATE, THE MATERIAL MUST BE REMOVED WITHIN 7 DAYS.

CATCH BASINS MUST BE BLOCKED FROM TAKING IN WATER UNTIL THE PERMANENT OUTLET HAS BEEN CONSTRUCTED. CP PIPE CAN BE USED TO CREATE A TEMPORARY OUTLET.

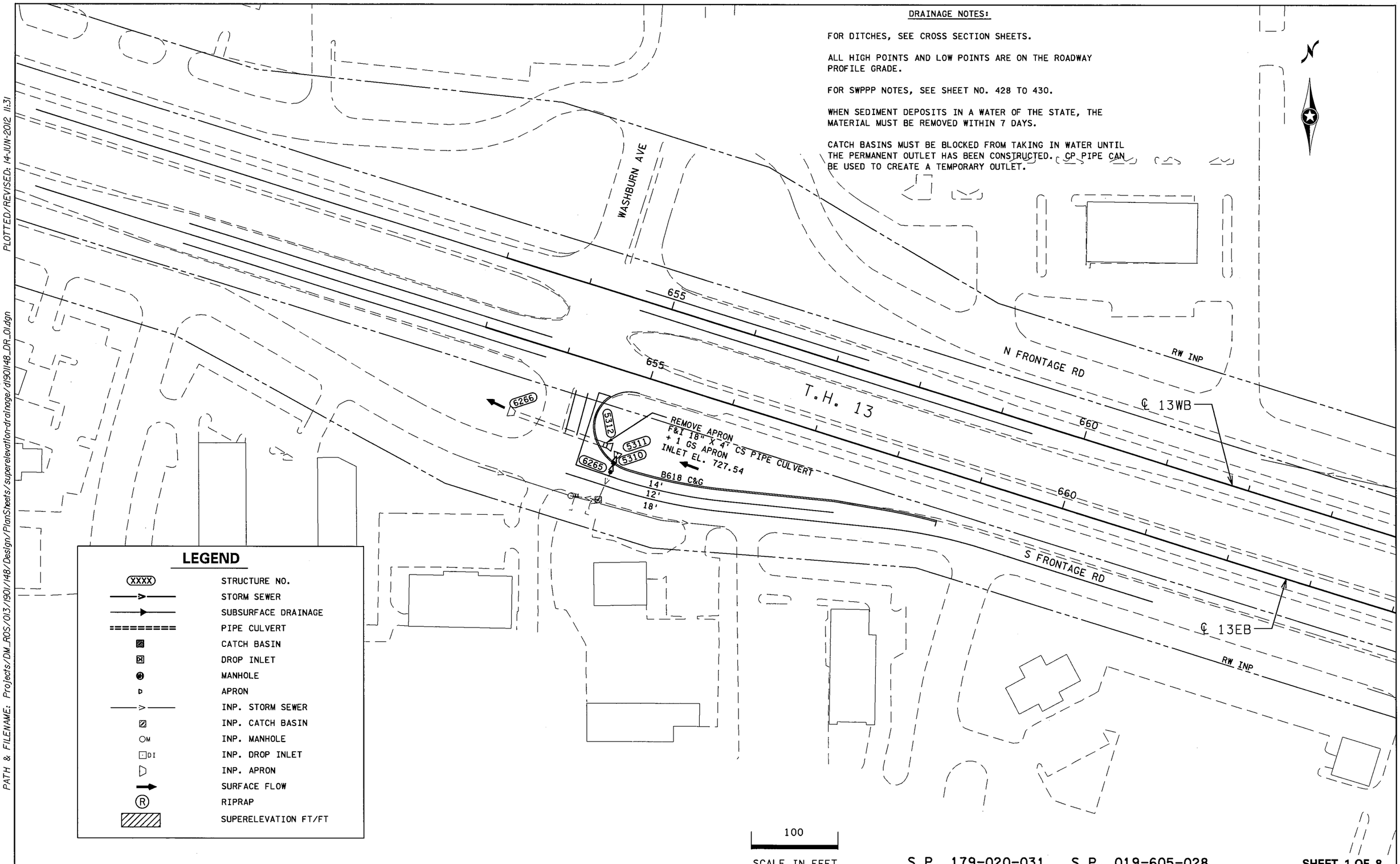

S.P. 179-020-031 S.P. 019-605-028

SHEET 1 OF 8

SUPERELEVATION AND DRAINAGE PLANS

DRAWN BY: GLJ	CHECKED BY: HS	CERTIFIED BY LICENSED PROFESSIONAL ENGINEER LIC. NO. 18520 DATE 6/18/12	STATE PROJ. NO. 1901-148 (T.H. 13) SHEET NO. 369 OF 442 SHEETS

DISTRICT #: METRO
IPLOT NAME: d190148_DR_01
PATH & FILENAME: Projects/DM_ROS/013/1901/148/Design/PlanSheets/superelevation-drainage/d190148_DR_01.dgn
PLOTTED/REVISED: 14-JUN-2012 11:31

PLOTTED/REVISED: 14-JUN-2012 11:32
DISTRICT #: METRO
IPLOT NAME: d1901148_DR_02
PATH & FILENAME: Projects/DM_ROS/013/1901/148/Design/PlanSheets/superelevation-drainage/d1901148_DR_02.dgn

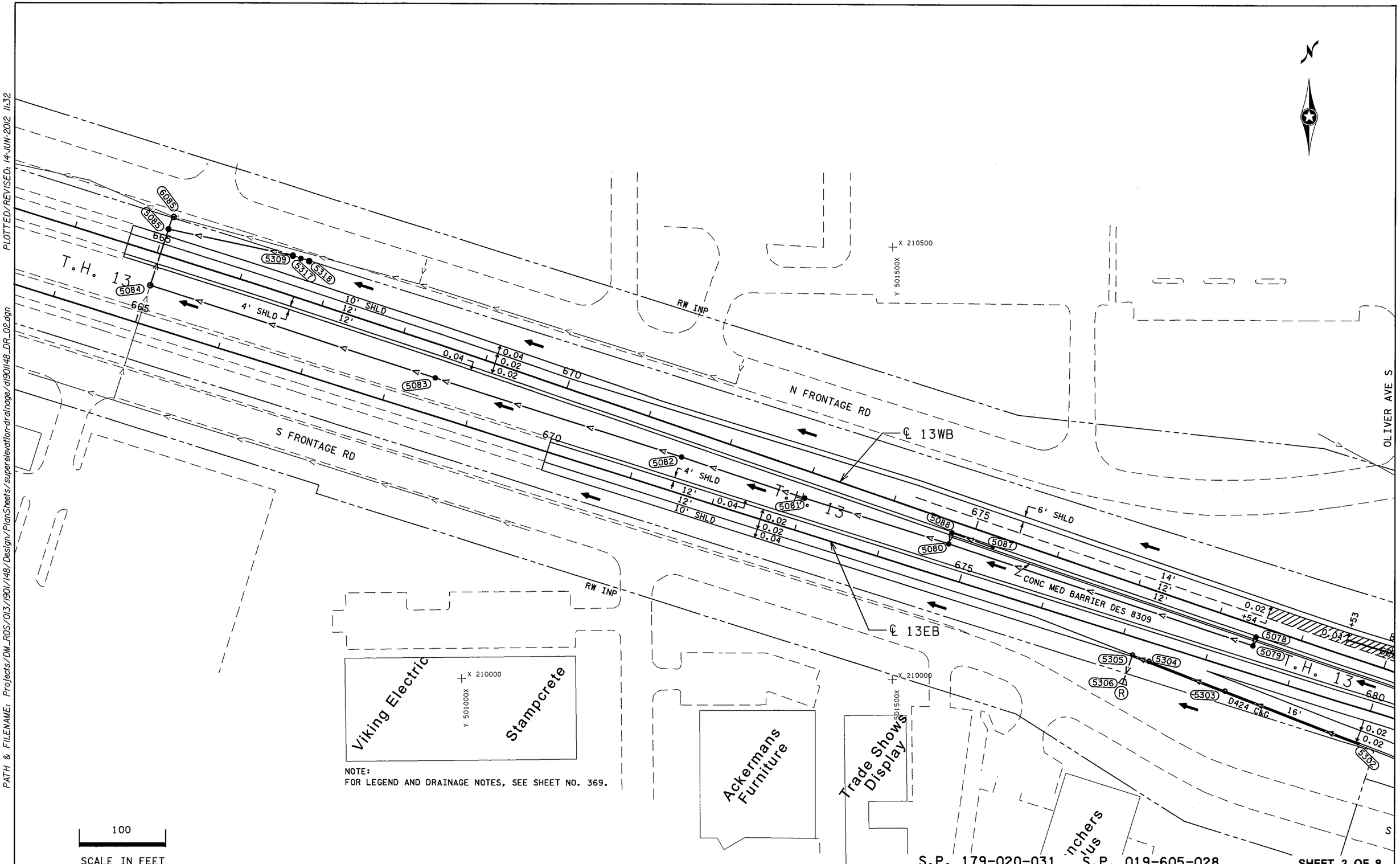

NOTE:
FOR LEGEND AND DRAINAGE NOTES, SEE SHEET NO. 369.

S.P. 179-020-031 S.P. 019-605-028

SHEET 2 OF 8

SUPERELEVATION AND DRAINAGE PLANS

DRAWN BY: GLJ	CHECKED BY: HS	CERTIFIED BY LICENSED PROFESSIONAL ENGINEER	LIC. NO. 18520 DATE 6/18/12	STATE PROJ. NO. 1901-148 (T.H. 13) SHEET NO. 370 OF 442 SHEETS

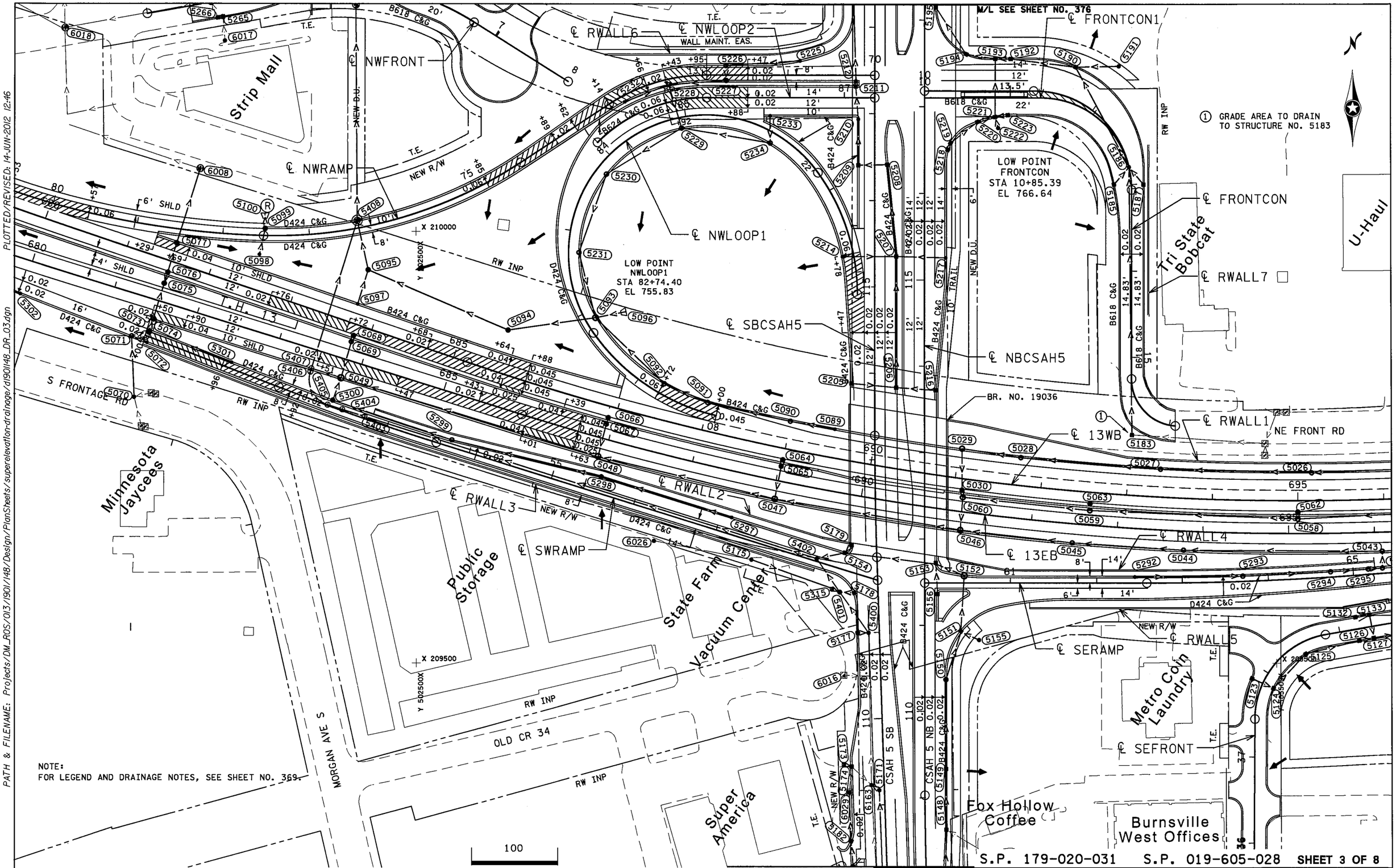

NOTE:
FOR LEGEND AND DRAINAGE NOTES, SEE SHEET NO. 369.

DISTRICT #: METRO
IPLOT NAME: d1901148_DR_03
PATH & FILENAME: Projects/DM_ROS/013/1901/148/Design/PlanSheets/superelevation-drainage/d1901148_DR_03.dgn
PLOTTED/REVISED: 14-JUN-2012 12:46

S.P. 179-020-031 S.P. 019-605-028 SHEET 3 OF 8

DRAINAGE AND SUPERELEVATION PLANS

DRAWN BY: GLJ	CHECKED BY: HS	CERTIFIED BY _____ LICENSED PROFESSIONAL ENGINEER	LIC. NO. 18520 DATE 6/18/12	STATE PROJ. NO. 1901-148 (T.H. 13)	SHEET NO. 371 OF 442 SHEETS

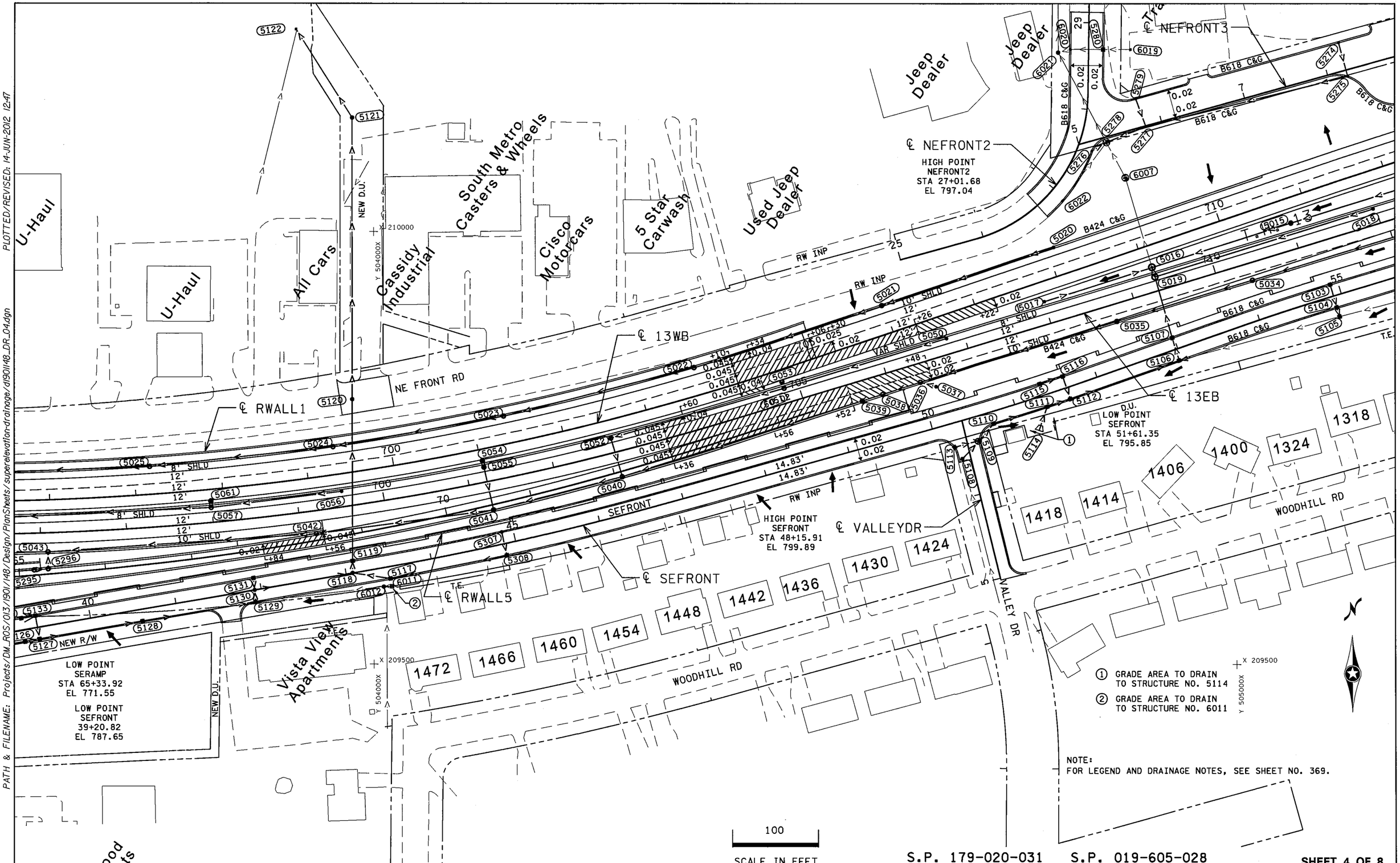

NOTE:
FOR LEGEND AND DRAINAGE NOTES, SEE SHEET NO. 369.

S.P. 179-020-031 S.P. 019-605-028

SHEET 4 OF 8

SUPERELEVATION AND DRAINAGE PLANS

DRAWN BY: GLJ	CHECKED BY: HS	CERTIFIED BY _____ LICENSED PROFESSIONAL ENGINEER	LIC. NO. 18520 DATE 6/18/12	STATE PROJ. NO. 1901-148 (T.H. 13)	SHEET NO. 372 OF 442 SHEETS

DISTRICT •: METRO
IPLOT NAME: d190l148_DR_04
PATH & FILENAME: Projects/DM_ROS/013/190l/148/Design/PlanSheets/superelevation-drainage/d190l148_DR_04.dgn
PLOTTED/REVISED: 14-JUN-2012 12:47

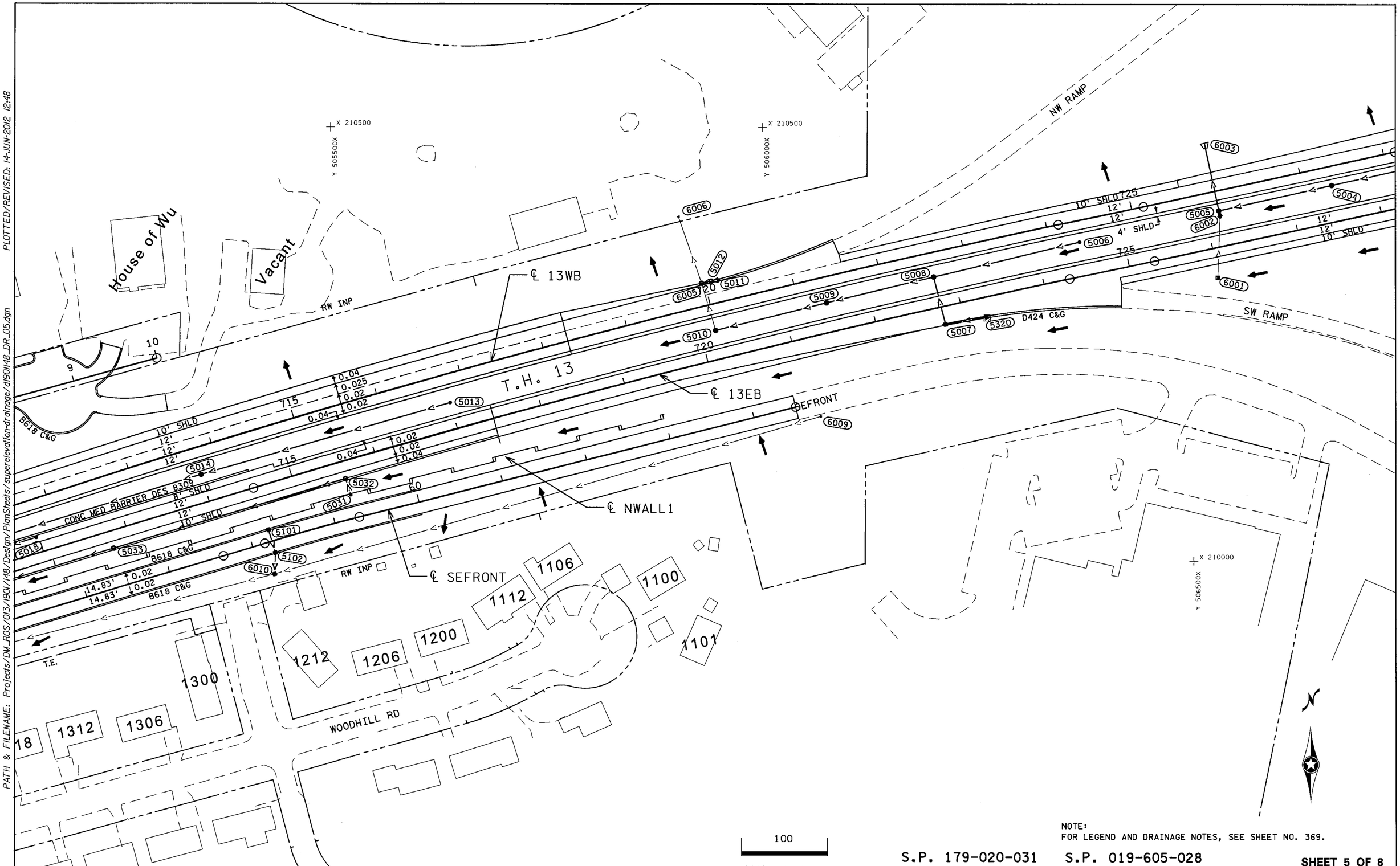

100

SCALE IN FEET

NOTE:
FOR LEGEND AND DRAINAGE NOTES, SEE SHEET NO. 369.

S.P. 179-020-031 S.P. 019-605-028

SHEET 5 OF 8

SUPERELEVATION AND DRAINAGE PLANS

DRAWN BY: GLJ	CHECKED BY: HS	CERTIFIED BY _____ LICENSED PROFESSIONAL ENGINEER	LIC. NO. 18520 DATE 6/18/12	STATE PROJ. NO. 1901-148 (T.H. 13) SHEET NO. 373 OF 442 SHEETS

DISTRICT #: METRO
IPLOT NAME: d190148_DR_05
PATH & FILENAME: Projects/DM_ROS/013/1901/148/Design/PlanSheets/superelevation-drainage/d190148_DR_05.dgn
PLOTTED/REVISED: 14-JUN-2012 12:48

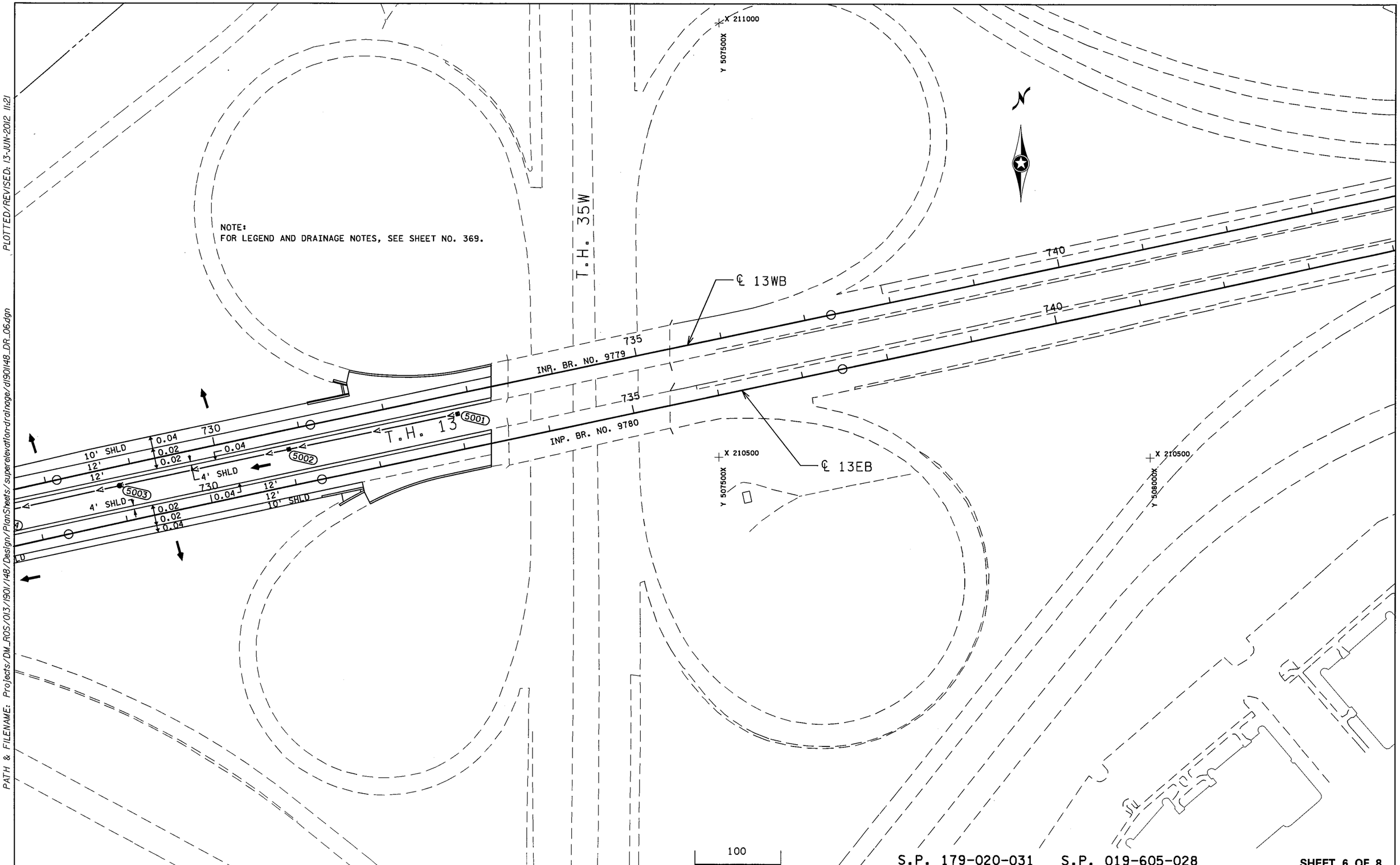

S.P. 179-020-031 S.P. 019-605-028

SHEET 6 OF 8

SUPERELEVATION AND DRAINAGE PLANS

DRAWN BY: GLJ	CHECKED BY: HS	CERTIFIED BY _____ LICENSED PROFESSIONAL ENGINEER	LIC. NO. 18520 DATE 6/18/12	STATE PROJ. NO. 1901-148 (T.H. 13)	SHEET NO. 374 OF 442 SHEETS

DISTRICT #: METRO
IPLOT NAME: d190148_DR_06
PATH & FILENAME: Projects/DM_ROS/013/1901/148/Design/PlanSheets/superelevation-drainage/d190148_DR_06.dgn
PLOTTED/REVISED: 13-JUN-2012 11:21

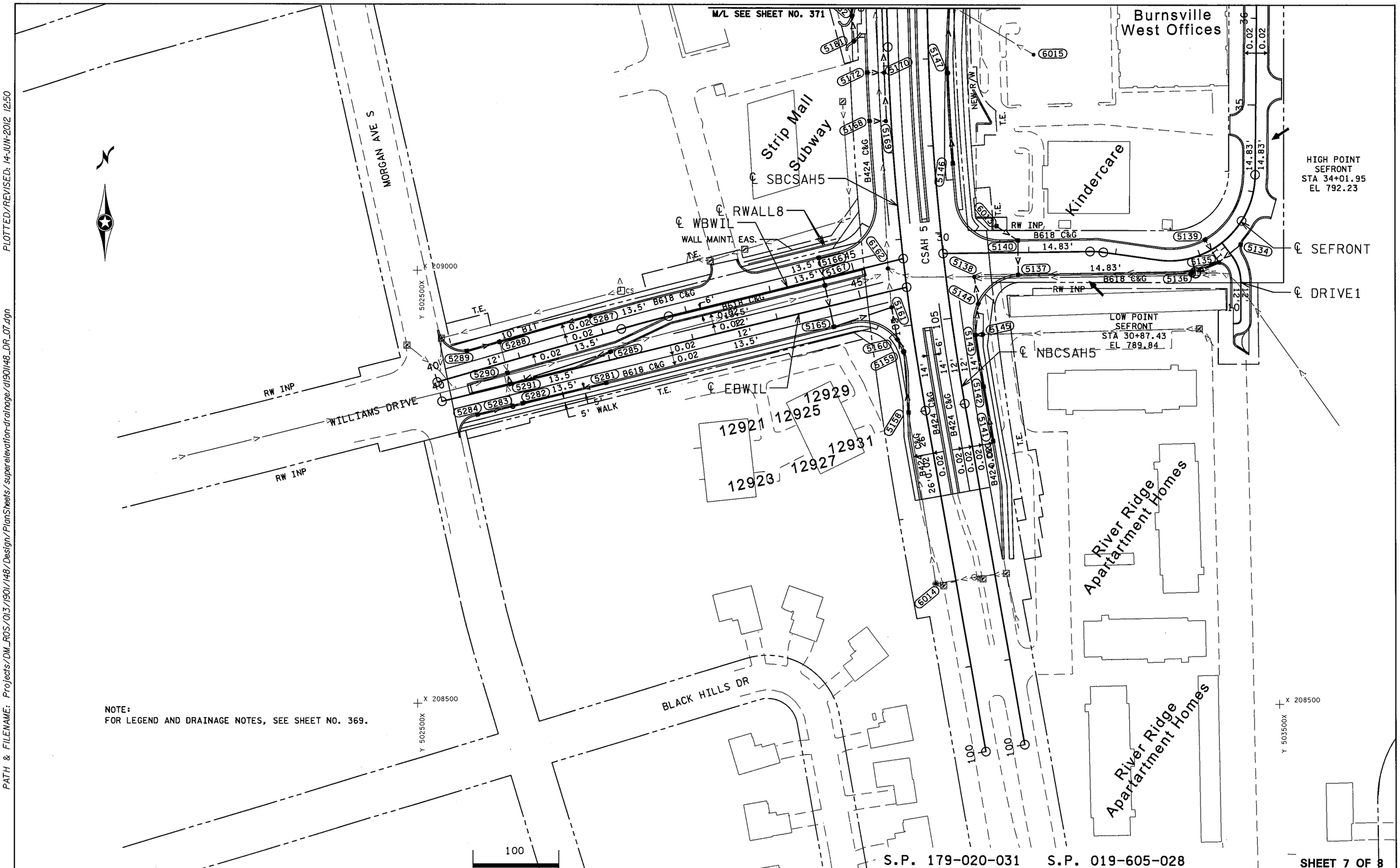

NOTE:
FOR LEGEND AND DRAINAGE NOTES, SEE SHEET NO. 369.

S.P. 179-020-031 S.P. 019-605-028

SHEET 7 OF 8

SUPERELEVATION AND DRAINAGE PLANS

DRAWN BY: GLJ	CHECKED BY: HS	CERTIFIED BY [signature] LICENSED PROFESSIONAL ENGINEER	LIC. NO. 18520 DATE 6/18/12	STATE PROJ. NO. 1901-148 (T.H. 13)	SHEET NO. 375 OF 442 SHEETS

DISTRICT #: METRO
IPLOT NAME: d1901148_DR_07
PATH & FILENAME: Projects/DM_ROS/013/1901/148/Design/PlanSheets/superelevation-drainage/d1901148_DR_07.dgn
PLOTTED/REVISED: 14-JUN-2012 12:50

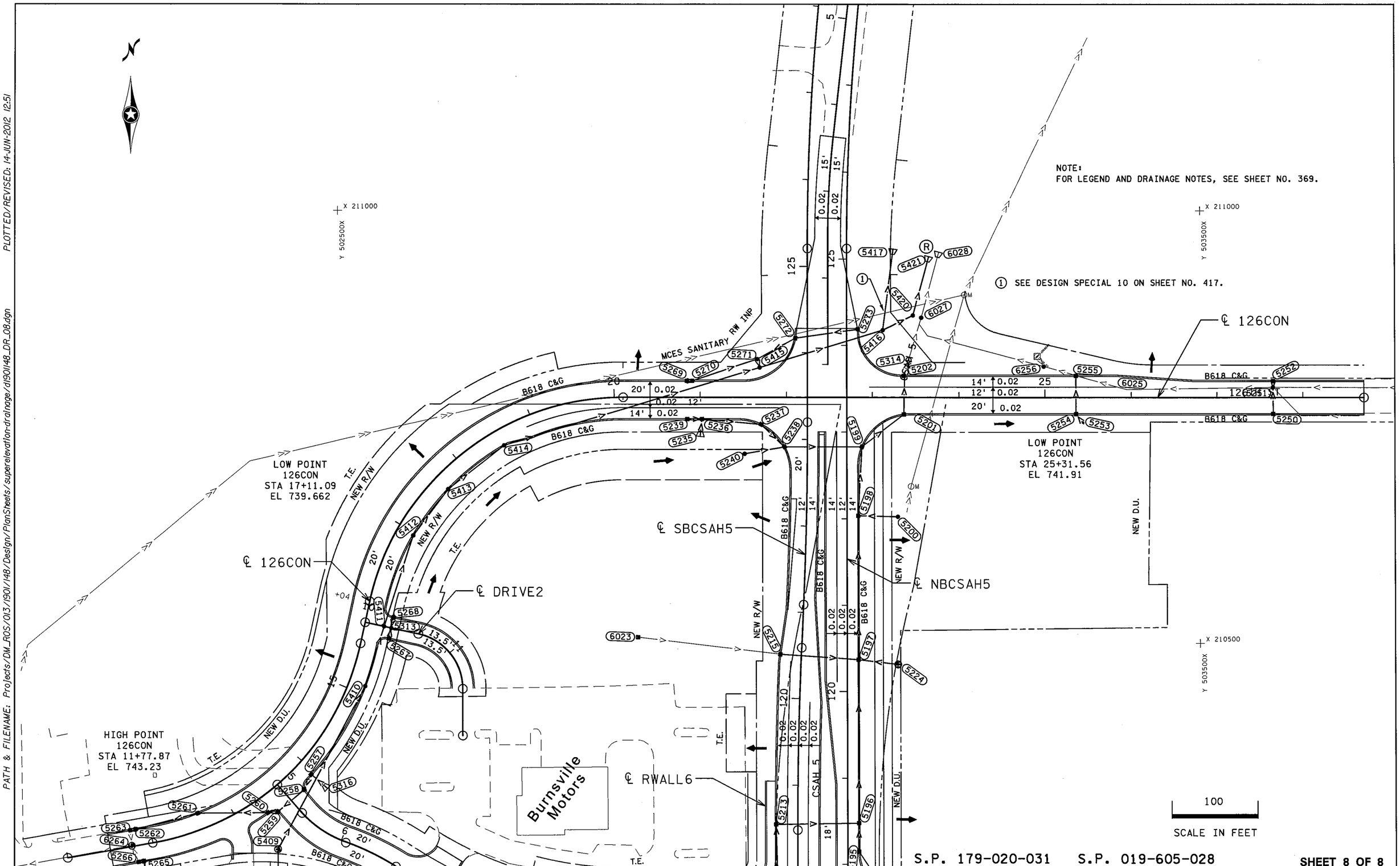

S.P. 179-020-031 S.P. 019-605-028

SHEET 8 OF 8

SUPERELEVATION AND DRAINAGE PLANS

DRAWN BY: GLJ	CHECKED BY: HS	CERTIFIED BY _____ LICENSED PROFESSIONAL ENGINEER	LIC. NO. 18520 DATE 6/18/12	STATE PROJ. NO. 1901-148 (T.H. 13)	SHEET NO. 376 OF 442 SHEETS

DISTRICT *: METRO
IPLOT NAME: d1901148_DR_08
PATH & FILENAME: Projects/DM_ROS/013/1901/148/Design/PlanSheets/superelevation-drainage/d1901148_DR_08.dgn
PLOTTED/REVISED: 14-JUN-2012 12:51

DRAINAGE TABULATION (THIS SHEET ONLY)

STRUCTURE NO.		STRUCTURE LOCATION			DRAINAGE STRUCTURES												
						PAY HEIGHT									15"	18"	
FLOWS FROM	FLOWS TO	ALIGN.	STATION	OFFSET	TYPE	H LIN FT	G LIN FT	SD-48 LIN FT	CASTING ASSEMBLY TYPE (1)	CONE TYPE	STEPS REQ'D	TOP OF CASTING ELEV	OUTLET ELEV.	INLET ELEV. (2)	RCP CL II LIN FT	RCP CL II LIN FT	REMARKS
5001	5002	13EB_MS	733+00.00	41.1' LT	CB	3.2			M - 11			832.22	829.07	827.96	200		
5002	5003	13EB_MS	731+00.00	41.6' LT	CB		4.0		M - 11			831.90	827.94	826.95	200		
5003	5004	13EB_MS	729+00.00	41.8' LT	CB		4.3		M - 11			830.94	826.72	825.36	150		
5004	5005	13EB_MS	727+50.00	42.0' LT	CB		4.8		M - 11		YES	829.81	825.08	824.53		134	
5005		13EB_MS	726+16.15	41.1' LT					M - 11			828.49					(3)
15005	6003	13EB_MS	726+16.15	41.9' LT	CB			4.0					824.50	823.69			(4) (6)
6001	6002	13EB_MS	725+98.89	34.2' RT	CB							828.99	825.39	824.97			INP CB (7)
6002	5005	13EB_MS	726+16.27	34.4' LT	MH				A - 7D			829.64	824.97	824.90		7	INP CB (5)
6003		13EB_MS	725+99.47	56.6' LT									823.69				INP APRON
TOTALS						3.2	13.1	4.0							550	141	

NOTE: STA. AND OFFSET IS AT
- CENTER OF STRUCTURE UNLESS NOTED OTHERWISE.
- END OF RC APRON, CS SAFETY APRON
- END OF BARREL, CS PIPE

FLOWLINE (F.L.) ELEVATIONS ARE AT CENTER OF STRUCTURE ON PROFILES.
INLET AND OUTLET ELEVATIONS ON TABULATION ARE AT EDGE OF STRUCTURE.
ALL CONCRETE PIPE SEWER IS DESIGN 3006 GASKET JOINT PIPE.

(1) FOR CASTING ASSEMBLY KEY & SUMMARY, SEE SHEET NO. 411.
(2) INLET ELEVATION AT DOWN-STREAM STRUCTURE.
(3) CENTER OF CASTING.
(4) CENTER OF STRUCTURE.
(5) CONVERT DROP INLET INTO MANHOLE. SEE MISCELLANEOUS DRAINAGE TABULATION ON SHEET NO. 44. CONNECT INTO EXISTING DRAINAGE STRUCTURE.
(6) CONSTRUCT OVER EXISTING STORM SEWER PIPE - INCIDENTAL.
(7) SEE MISCELLANEOUS DRAINAGE TAB ON SHEET NO. 44.

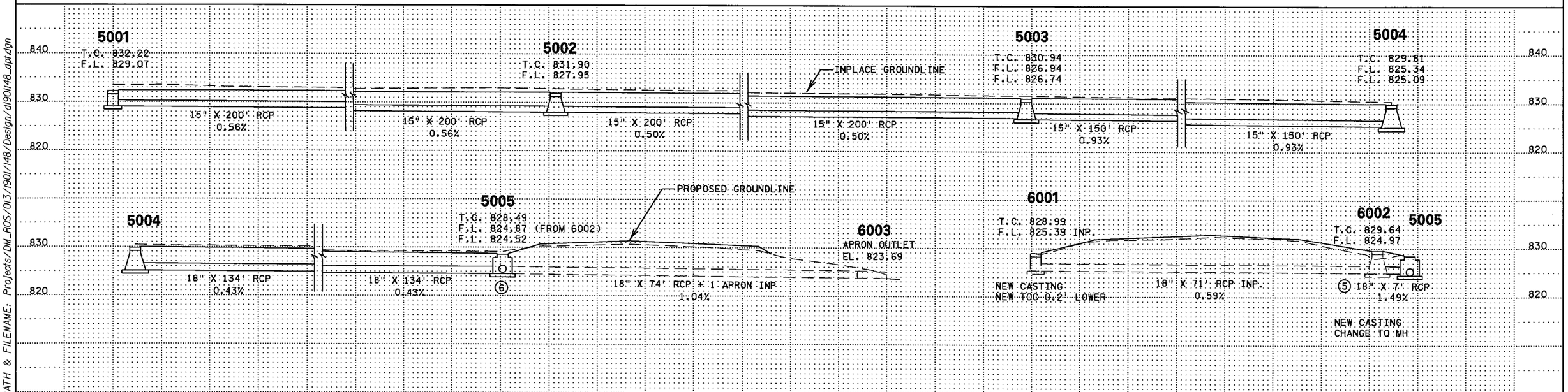

I HEREBY CERTIFY THAT SHEETS 377 THROUGH 407 AND SHEETS 412 THROUGH 430 OF THIS PLAN WERE PREPARED BY ME OR UNDER MY DIRECT SUPERVISION AND THAT I AM A DULY LICENSED PROFESSIONAL ENGINEER UNDER THE LAWS OF THE STATE OF MINNESOTA.

CERTIFIED BY: Scott Carlstrom
SCOTT J. CARLSTROM
DATE 6/15/12 LICENSE NO 23344

5001 5004 6002
5002 5005 6003
5003 6001

S.P. 179-020-031 S.P. 019-605-028 1 OF 31

DRAINAGE TABULATIONS AND PROFILES

DRAWN BY: CT | CHECKED BY: HS | CERTIFIED BY _____ LICENSED PROFESSIONAL ENGINEER LIC. NO. 23344 DATE 6/18/12

STATE PROJ. NO. 1901-148 (T.H. 13) SHEET NO. 377 OF 442 SHEETS

PLOTTED/REVISED: 14-JUN-2012 15:03
DISTRICT *: METRO
IPLOT NAME: d1901148_dpt1
PATH & FILENAME: Projects/DM_ROS/013/1901/148/Design/d1901148_dpt.dgn

DRAINAGE TABULATION (THIS SHEET ONLY)

STRUCTURE NO.		STRUCTURE LOCATION				DRAINAGE STRUCTURES												
							PAY HEIGHT										15" RCP CL II	
FLOWS FROM	FLOWS TO	ALIGN.	STATION	OFFSET		TYPE	H LIN FT	G LIN FT	SD-48 LIN FT	48-4020 LIN FT	CASTING ASSEMBLY TYPE (1)	CONE TYPE	STEPS REQ'D	TOP OF CASTING ELEV	OUTLET ELEV.	INLET ELEV. (2)	LIN FT	REMARKS
5006	5008	13EB_MS	724+50.00	39.3'	LT	CB	3.2				M - 11			826.47	823.31	821.13	174	
5007		13EB_MS	722+77.96	20.9'	RT						D - 4			827.07				(3)
15007	5008	13EB_MS	722+77.96	20.1'	RT	CB			3.7						823.31	821.19	57	(4)
5008		13EB_MS	722+76.45	35.8'	LT						M - 11			824.26				(3)
15008	5009	13EB_MS	722+76.45	36.4'	LT	CB			3.2						821.07	818.54	127	(4)
5009	5010	13EB_MS	721+50.00	34.3'	LT	CB		4.0			M - 11			822.45	818.47	816.41	133	
5010		13EB_MS	720+17.52	33.5'	LT						M - 11			820.33				(3)
15010	6005	13EB_MS	720+17.52	32.7'	LT	CB				4.7			YES		815.67	813.72		(4)(7)
5011	5012	13WB_MS	720+16.25	25.3'	LT	CB	3.3				B - 9			822.13	818.79	818.25	9	
5012		13WB_MS	720+07.71	25.2'	LT						B - 9			822.00				(3)
15012	6005	13WB_MS	720+07.71	26.0'	LT	CB			3.9						818.02	817.94	11	(4)(5)
5320	5007	13EB_MS	723+26.72	22.8'	RT	CB	3.7				D - 4			827.92	824.13	823.42	49	
6005	6006	13WB_MS	719+96.27	25.4'	LT	CB					B - 9			821.86	789.51	781.52		INP CB (6)
6006		13WB_MS	719+89.47	107.9'	LT										781.52			INP APRON
TOTALS							10.2	4.0	10.8	4.7							560	

NOTE: STA. AND OFFSET IS AT
- CENTER OF STRUCTURE UNLESS NOTED OTHERWISE.
- END OF RC APRON, CS SAFETY APRON
- END OF BARREL, CS PIPE

FLOWLINE (F.L.) ELEVATIONS ARE AT CENTER OF STRUCTURE ON PROFILES.
INLET AND OUTLET ELEVATIONS ON TABULATION ARE AT EDGE OF STRUCTURE.

ALL CONCRETE PIPE SEWER IS DESIGN 3006 GASKET JOINT PIPE.

(1) FOR CASTING ASSEMBLY KEY & SUMMARY, SEE SHEET NO. 411.
(2) INLET ELEVATION AT DOWN-STREAM STRUCTURE.
(3) CENTER OF CASTING.
(4) CENTER OF STRUCTURE.
(5) CONNECT INTO EXISTING DRAINAGE STRUCTURE.
(6) ADJUST FRAME AND RING CASTING. SEE TABULATION ON SHEET NO. 44.
(7) CONSTRUCT OVER EXISTING STORM SEWER PIPE - INCIDENTAL.

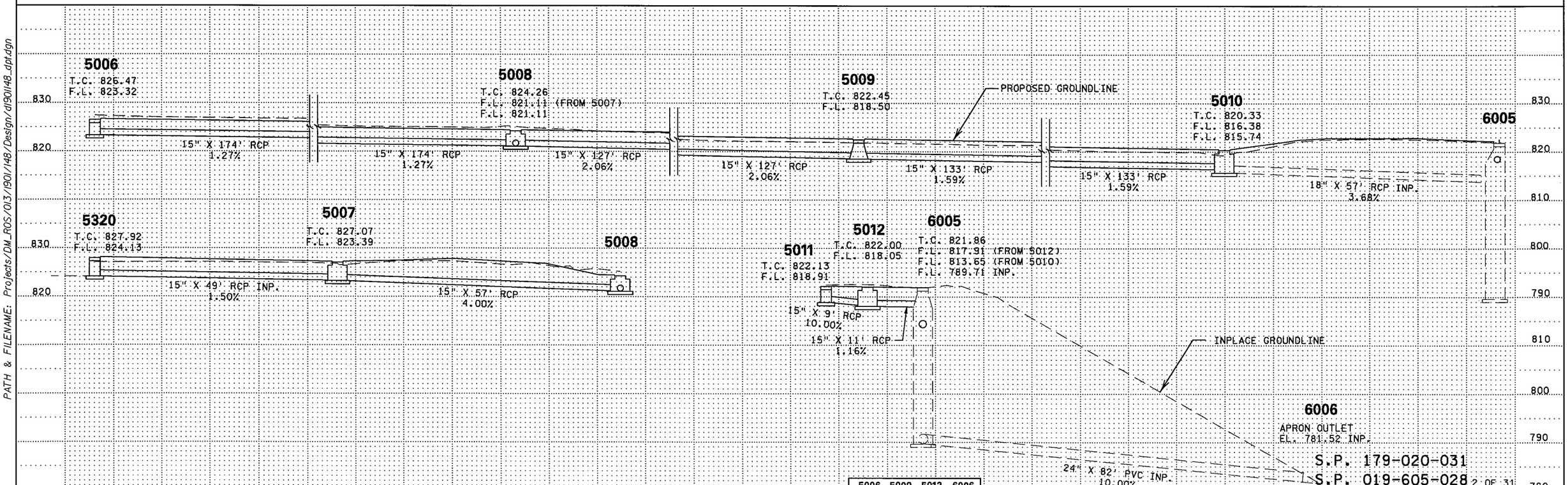

5006	5009	5012	6006
5007	5010	5320	
5008	5011	6005	

S.P. 179-020-031
S.P. 019-605-028 2 OF 31

DRAINAGE TABULATIONS AND PROFILES

DRAWN BY: CT | CHECKED BY: HS | CERTIFIED BY Scott Calstrom LICENSED PROFESSIONAL ENGINEER | LIC. NO. 23344 DATE 6/18/12 | STATE PROJ. NO. 1901-148 (T.H. 13) | SHEET NO. 378 OF 442 SHEETS

PLOTTED/REVISED: 12-JUN-2012 15:14
DISTRICT #: METRO
IPLOT NAME: d190l148_dpl2
PATH & FILENAME: Projects/DM_ROS/013/190l/148/Design/d190l148_dpt.dgn

DRAINAGE TABULATION (THIS SHEET ONLY)

STRUCTURE NO. FLOWS FROM	STRUCTURE NO. FLOWS TO	STRUCTURE LOCATION ALIGN.	STATION	OFFSET	DRAINAGE STRUCTURES TYPE	PAY HEIGHT H LIN FT	G LIN FT	54-4020 LIN FT	72-4020 LIN FT	78-4020 LIN FT	84-4020 LIN FT	CASTING ASSEMBLY TYPE (1)	CONE TYPE	STEPS REQ'D	TOP OF CASTING ELEV	OUTLET ELEV.	INLET ELEV. (2)	15" RCP CL II LIN FT	27" RCP CL II LIN FT	48" RCP CL II LIN FT	48" RCP CL III LIN FT	REMARKS
5013	5014	13EB	717+00.00	31.0' LT	CB	3.3						M - 11			814.83	811.58	805.14	301				
5014	5015	13EB	714+00.00	32.4' LT	CB		4.1					M - 11			809.05	804.96	798.64	300				
5015	5016	13EB	711+00.00	30.0' LT	CB		4.7					M - 11		YES	802.64	797.97	795.55	169				
5016		13EB	709+31.12	27.5' LT								M - 11			798.84							(3)
15016	6007	13EB	709+31.12	29.6' LT	CB					11.5				YES		787.41	783.77					(4)(5)
5017	5016	13EB	708+00.00	26.0' LT	CB	3.2						M - 11			795.85	792.64	792.02	131				
5018	5019	13EB	711+96.70	18.0' LT	CB	3.3						B - 9			806.49	803.15	795.75	265				
5019		13EB	709+31.32	18.0' LT								B - 9			800.31							(3)
15019	5016	13EB	709+31.32	16.2' LT	CB				12.3					YES		787.92	787.77				12	(4)
5105		SEFRONT	54+90.52	24.9' RT								M - 11			799.40							(3)
15105	5106	SEFRONT	54+90.52	26.0' RT	CB			3.5								795.97	791.96		12			(4)(5)
5106		SEFRONT	52+97.06	13.8' RT								R - 3067V			796.81							(3)
15106	5107	SEFRONT	52+97.06	13.8' RT	CB						6.4					790.66	790.10			28		(4)(6)
5107		SEFRONT	52+97.83	13.8' LT								R - 3067V			796.82							(3)
15107	5019	SEFRONT	52+97.83	15.6' LT	CB				7.2							789.94	788.08				73	(4)
6010	5105	SEFRONT	58+15.60	37.2' RT	CB										808.96	803.56	795.97					CB INP
TOTALS						9.8	8.8	3.5	19.5	11.5	6.4							1166	12	28	85	

NOTE: STA. AND OFFSET IS AT
- CENTER OF STRUCTURE UNLESS NOTED OTHERWISE.
- END OF RC APRON, CS SAFETY APRON
- END OF BARREL, CS PIPE

FLOWLINE (F.L.) ELEVATIONS ARE AT CENTER OF STRUCTURE ON PROFILES.
INLET AND OUTLET ELEVATIONS ON TABULATION ARE AT EDGE OF STRUCTURE.

ALL CONCRETE PIPE SEWER IS DESIGN 3006 GASKET JOINT PIPE.

(1) FOR CASTING ASSEMBLY KEY & SUMMARY, SEE SHEET NO. 411.
(2) INLET ELEVATION AT DOWN-STREAM STRUCTURE.
(3) CENTER OF CASTING.
(4) CENTER OF STRUCTURE.
(5) CONSTRUCT OVER EXISTING STORM SEWER PIPE - INCIDENTAL.
(6) CONNECT TO EXISTING STORM SEWER.
(7) TEMPORARY STRUCTURE. FOR DETAILS, SEE TABULATION ON SHEET NO. 412.

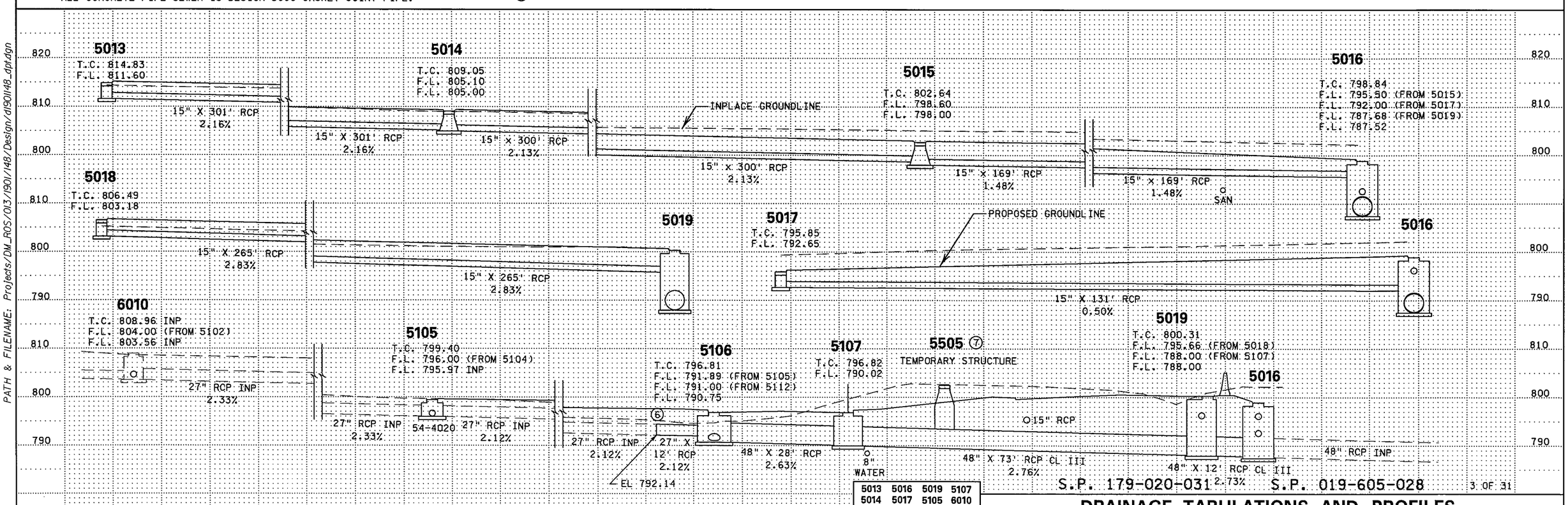

5013	5016	5019	5107
5014	5017	5105	6010
5015	5018	5106	

DRAINAGE TABULATIONS AND PROFILES

DRAWN BY: CT | CHECKED BY: HS | CERTIFIED BY Scott Carlstrom LICENSED PROFESSIONAL ENGINEER | LIC. NO. 23344 DATE 6/18/12

STATE PROJ. NO. 1901-148 (T.H. 13) SHEET NO. 379 OF 442 SHEETS

PLOTTED/REVISED: 12-JUN-2012 15:14
DISTRICT #: METRO
IPLOT NAME: dl90ll48_dpt3
PATH & FILENAME: Projects/DM_ROS/013/190l/148/Design/dl90ll48_dpt.dgn

DRAINAGE TABULATION (THIS SHEET ONLY)

STRUCTURE NO.		STRUCTURE LOCATION			DRAINAGE STRUCTURES												
						PAY HEIGHT			CASTING	CONE	STEPS	TOP OF	OUTLET	INLET	12" RCP	15" RCP	
FLOWS FROM	FLOWS TO	ALIGN.	STATION	OFFSET	TYPE	DES SPEC ⑦ LIN FT	DES SPEC 1 ⑧ LIN FT	120-4020 LIN FT	ASSEMBLY TYPE ①	TYPE	REQ'D	CASTING ELEV	ELEV.	ELEV. ②	CL II LIN FT	CL II LIN FT	REMARKS
5101	5102	SEFRONT	58+23.51	14.3' LT	CB	3.3			R - 3067V			808.84	805.67	804.93		28	
5102	6010	SEFRONT	58+23.49	14.3' RT	CB	4.1			R - 3067V			808.84	804.86	804.07		25	⑥
5103	5104	SEFRONT	54+90.48	14.3' LT	CB	3.4			R - 3067V			801.03	797.70	796.80	28		
5104	5105	SEFRONT	54+90.48	14.3' RT	CB	4.3			R - 3067V			801.03	796.70	796.32	11		
5274	5275	NEFRONT3	8+22.49	33.5' LT	CB	3.4			R - 3067V			802.48	799.20	797.63		41	
5275		NEFRONT3	8+22.52	8.6' RT					R - 3067V			802.33					③
15275	5277	NEFRONT3	8+22.52	8.9' RT	CB		5.2						797.18	789.21		242	④
5276	5278	NEFRONT2	27+56.82	17.4' RT	CB	3.4			R - 3067V			795.78	792.54	791.70		20	
5277		NEFRONT3	5+80.87	1.4' RT					R - 3067V			795.38					③
15277	5278	NEFRONT3	5+80.87	1.7' RT	CB		6.4						789.10	788.28		49	④
5278		NEFRONT3	5+31.76	6.1' RT					R - 1642			795.33					③
15278	6021	NEFRONT3	5+31.76	9.3' RT	CB			13.4					782.01				④⑤
5279	5277	NEFRONT3	5+77.94	33.5' LT	CB	3.4			R - 3067V			795.35	792.03	791.37		34	
6007	5278	13EB	709+31.37	135.7' LT	MH							797.97	783.77	782.30			MH INP
TOTALS						25.3	11.6	13.4							39	439	

① FOR CASTING ASSEMBLY KEY & SUMMARY, SEE SHEET NO. 411.
② INLET ELEVATION AT DOWN-STREAM STRUCTURE.
③ CENTER OF CASTING.
④ CENTER OF STRUCTURE.
⑤ CONSTRUCT OVER EXISTING STORM SEWER PIPE - INCIDENTAL.
⑥ CONNECT INTO EXISTING DRAINAGE STRUCTURE.
⑦ FOR DETAILS, SEE SHEET NO. 420.
⑧ FOR DETAILS, SEE SHEET NO. 420.

NOTE: STA. AND OFFSET IS AT
- CENTER OF STRUCTURE UNLESS NOTED OTHERWISE.
- END OF RC APRON, CS SAFETY APRON
- END OF BARREL, CS PIPE

FLOWLINE (F.L.) ELEVATIONS ARE AT CENTER OF STRUCTURE ON PROFILES.
INLET AND OUTLET ELEVATIONS ON TABULATION ARE AT EDGE OF STRUCTURE.
ALL CONCRETE PIPE SEWER IS DESIGN 3006 GASKET JOINT PIPE.

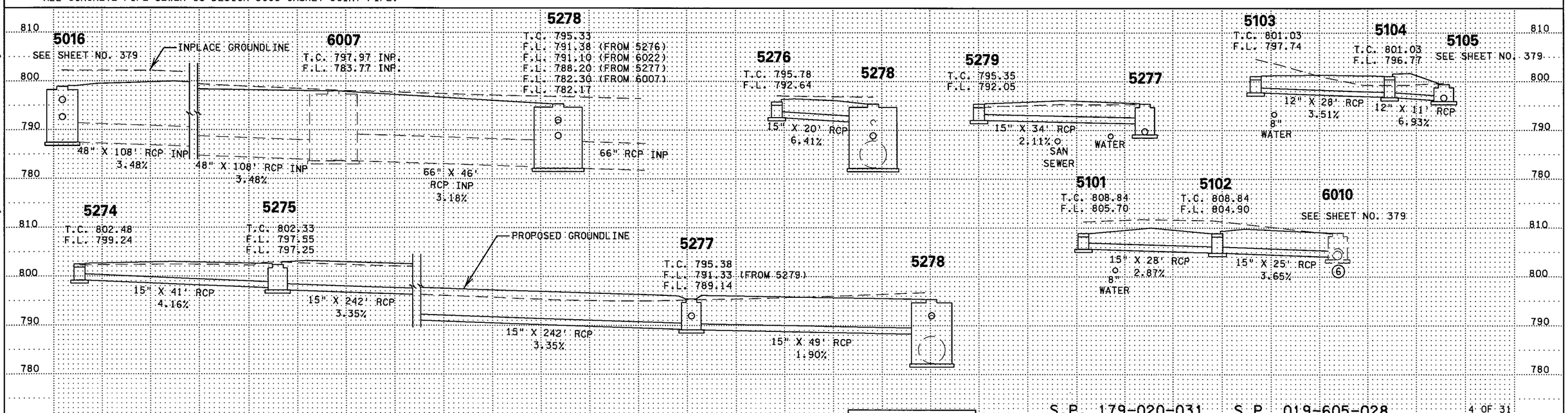

5101	5104	5276	5279
5102	5274	5277	6007
5103	5275	5278	

S.P. 179-020-031 S.P. 019-605-028

4 OF 31

DRAINAGE TABULATIONS AND PROFILES

DRAWN BY: CT | CHECKED BY: HS | CERTIFIED BY Scott Carlson LICENSED PROFESSIONAL ENGINEER | LIC. NO. 23344 DATE 6/18/12

STATE PROJ. NO. 1901-148 (T.H. 13) SHEET NO. 380 OF 442 SHEETS

PLOTTED/REVISED: 12-JUN-2012 15:14
DISTRICT #: METRO
IPLOT NAME: dl901148_dpf4
PATH & FILENAME: Projects/DM_ROS/013/1901/148/Design/dl901148_dpt.dgn

DRAINAGE TABULATION (THIS SHEET ONLY)

STRUCTURE NO. FLOWS FROM	STRUCTURE NO. FLOWS TO	STRUCTURE LOCATION ALIGN.	STATION	OFFSET	TYPE	DRAINAGE STRUCTURES PAY HEIGHT G LIN FT	54-4020 LIN FT	78-4020 LIN FT	84-4020 LIN FT	DES SPEC (7) LIN FT	DES SPEC 1 (8) LIN FT	CASTING ASSEMBLY TYPE (1)	CONE TYPE	STEPS REQ'D	TOP OF CASTING ELEV	OUTLET ELEV.	INLET ELEV. (2)	12" RCP CL II LIN FT	15" RCP CL II LIN FT	24" RCP CL II LIN FT	28" RCP-A CL IIA LIN FT	APRON EACH	APRON TYPE	GUIDE POSTS TYPE B EACH	REMARKS
5108	5109	VALLEYDR	6+44.28	10.0' LT	MH	4.6						R - 1642			796.70	792.23	792.00			29					(5)
5109		SEFRONT	50+49.42	28.3' RT								R - 3067V			796.08										(3) (9)
15109	5110	SEFRONT	50+47.36	28.1' RT	CB											791.99	791.85				25				(4)
5110		SEFRONT	50+70.32	14.3' RT								R - 3067V			796.02										(3)
15110	5111	SEFRONT	50+70.32	14.6' RT	CB						4.2					791.83	791.56				65				(4)
5111		SEFRONT	51+34.68	14.3' RT								R - 3067V			795.49										(3)
15111	5112	SEFRONT	51+34.68	16.1' RT	CB			4.2	4.3							791.52	791.45				28				(4)
5112		SEFRONT	51+62.68	14.3' RT								R - 3067V			795.43										(3)
15112	5106	SEFRONT	51+62.68	14.8' RT	CB		4.3									791.43	791.01				134				(4)
5113	5109	SEFRONT	50+19.57	27.4' RT	CB					3.3		R - 3067V			796.54	793.38	792.73	30							
5114	5111	SEFRONT	51+17.58	37.0' RT	APR											794.50	791.73		23			1	15" RC APRON	1	(6)
5115	5116	SEFRONT	51+34.68	14.3' LT	CB					3.4		R - 3067V			795.49	792.17	792.01		28						
5116	5112	SEFRONT	51+62.68	14.3' LT	CB					3.5		R - 3067V			795.43	791.98	791.72		28						
5280	6020	NEFRONT2	28+69.23	17.5' RT	CB							R - 3067V			789.40	784.65	781.67								(5)
6020	6021	NEFRONT2	28+68.80	21.0' LT	CB							R - 3067V			789.37	781.60	780.52								(10)
TOTALS						4.6	4.3	4.2	4.3	10.2	4.2							30	79	29	252	1		1	

NOTE: STA. AND OFFSET IS AT
- CENTER OF STRUCTURE UNLESS NOTED OTHERWISE.
- END OF RC APRON, CS SAFETY APRON
- END OF BARREL, CS PIPE

FLOWLINE (F.L.) ELEVATIONS ARE AT CENTER OF STRUCTURE ON PROFILES.
INLET AND OUTLET ELEVATIONS ON TABULATION ARE AT EDGE OF STRUCTURE.

ALL CONCRETE PIPE SEWER IS DESIGN 3006 GASKET JOINT PIPE.

(1) FOR CASTING ASSEMBLY KEY & SUMMARY, SEE SHEET NO. 411.
(2) INLET ELEVATION AT DOWN-STREAM STRUCTURE.
(3) CENTER OF CASTING.
(4) CENTER OF STRUCTURE.
(5) CONSTRUCT OVER EXISTING STORM SEWER PIPE - INCIDENTAL.
(6) TIE LAST 3 JOINTS AT APRON END - INCIDENTAL.
(7) FOR DETAILS, SEE SHEET NO. 420.
(8) FOR DETAILS, SEE SHEET NO. 420.
(9) LOCATION OF INTERSECTION OF PIPES.
(10) INPLACE MH. SEE TABULATION ON SHEET NO. 44.

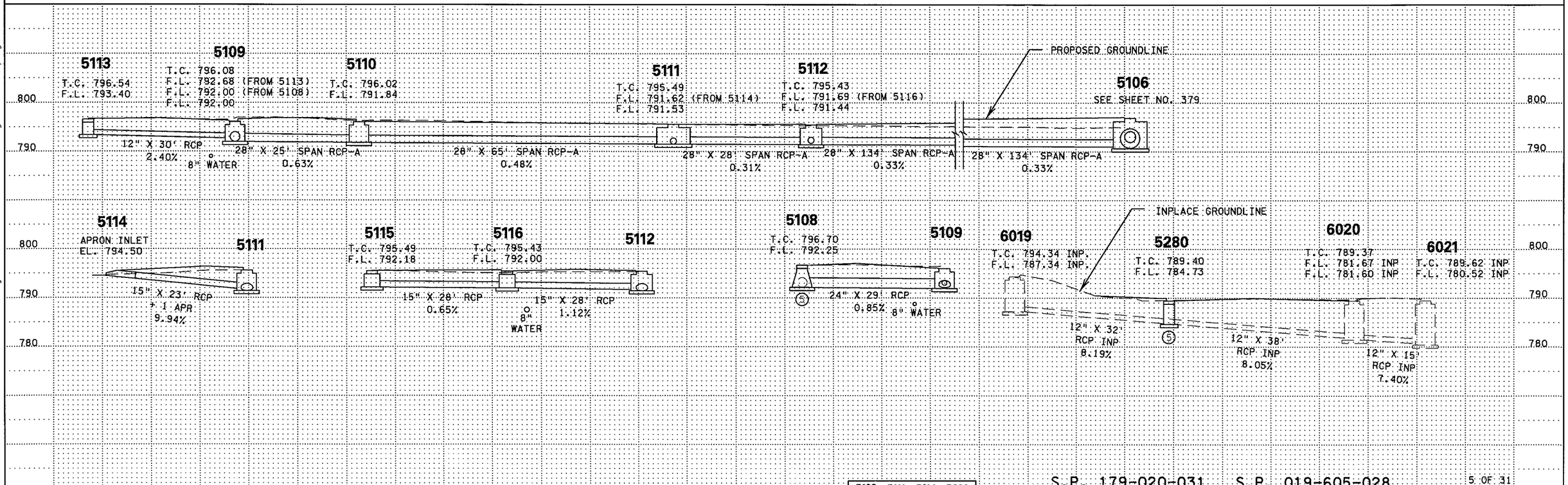

5108	5111	5114	5280
5109	5112	5115	6020
5110	5113	5116	

S.P. 179-020-031 S.P. 019-605-028

5 OF 31

DRAINAGE TABULATIONS AND PROFILES

DRAWN BY: CT | CHECKED BY: HS | CERTIFIED BY Scott Cockrum LICENSED PROFESSIONAL ENGINEER | LIC. NO. 23344 DATE 6/18/12

STATE PROJ. NO. 1901-148 (T.H. 13) SHEET NO. 381 OF 442 SHEETS

PLOTTED/REVISED: 12-JUN-2012 15:14
DISTRICT #: METRO
IPLOT NAME: d190148_dp15
PATH & FILENAME: Projects/DM_ROS/013/190148/Design/d190148_dpt.dgn

DRAINAGE TABULATION (THIS SHEET ONLY)

STRUCTURE NO. FLOWS FROM	STRUCTURE NO. FLOWS TO	STRUCTURE LOCATION ALIGN.	STRUCTURE LOCATION STATION	STRUCTURE LOCATION OFFSET	DRAINAGE STRUCTURES TYPE	PAY HEIGHT H LIN FT	PAY HEIGHT SD-48 LIN FT	PAY HEIGHT 48-4020 LIN FT	PAY HEIGHT 108-4020 LIN FT	CASTING ASSEMBLY TYPE (1)	CONE TYPE	STEPS REQ'D	TOP OF CASTING ELEV	OUTLET ELEV.	INLET ELEV. (2)	15" RCP CL II LIN FT	REMARKS
5031	5032	13EB	715+60.00	39.6' RT	CB	3.5				M - 11			811.31	807.88	807.54	19	
5032		13EB	715+59.50	21.0' RT						B - 9			813.79				(3)
15032	5033	13EB	715+59.50	20.2' RT	CB		6.2					YES		807.47	803.43	280	(4)
5033		13EB	712+79.05	21.0' RT						B - 9			808.28				(3)
15033	5034	13EB	712+79.05	20.2' RT	CB		4.8					YES		803.36	798.74	241	(4)
5034		13EB	710+38.25	21.0' RT						B - 9			802.91				(3)
15034	5035	13EB	710+38.25	20.2' RT	CB		4.2							798.65	794.80	165	(4)
5035		13EB	708+73.68	21.0' RT						B - 9			798.89				(3)
15035	5036	13EB	708+73.68	20.2' RT	CB		4.1							794.70	788.82	238	(4)
5036		13EB	706+35.28	22.5' RT						D - 4			792.97				(3)
15036	5038	13EB	706+35.28	19.2' RT	CB				4.2					788.63	787.36	46	(4)
5038		13EB	705+89.37	23.4' RT						D - 4			792.02				(3)
15038	5039	13EB	705+89.37	22.6' RT	CB			4.7				YES		787.24	786.57	25	(4)
5039		13EB	705+64.74	23.9' RT						D - 4			791.52				(3)
15039	5040	13EB	705+64.74	23.1' RT	CB			5.0				YES		786.46	779.55	291	(4)
5040		13EB	702+74.64	30.0' RT						D - 4			785.63				(3)
15040	5041	13EB	702+74.64	29.2' RT	CB			6.1				YES		779.47	777.53	154	(4)
5041		13EB	701+22.23	34.1' RT						D - 4			783.14				(3)
15041	5042	13EB	701+22.23	33.3' RT	CB			6.7				YES		776.37	773.26	207	(4)
TOTALS						3.5	19.3	22.5	4.2							1666	

NOTE: STA. AND OFFSET IS AT
- CENTER OF STRUCTURE UNLESS NOTED OTHERWISE.
- END OF RC APRON, CS SAFETY APRON
- END OF BARREL, CS PIPE

FLOWLINE (F.L.) ELEVATIONS ARE AT CENTER OF STRUCTURE ON PROFILES.
INLET AND OUTLET ELEVATIONS ON TABULATION ARE AT EDGE OF STRUCTURE.

ALL CONCRETE PIPE SEWER IS DESIGN 3006 GASKET JOINT PIPE.

(1) FOR CASTING ASSEMBLY KEY & SUMMARY, SEE SHEET NO. 411.
(2) INLET ELEVATION AT DOWN-STREAM STRUCTURE.
(3) CENTER OF CASTING.
(4) CENTER OF STRUCTURE.

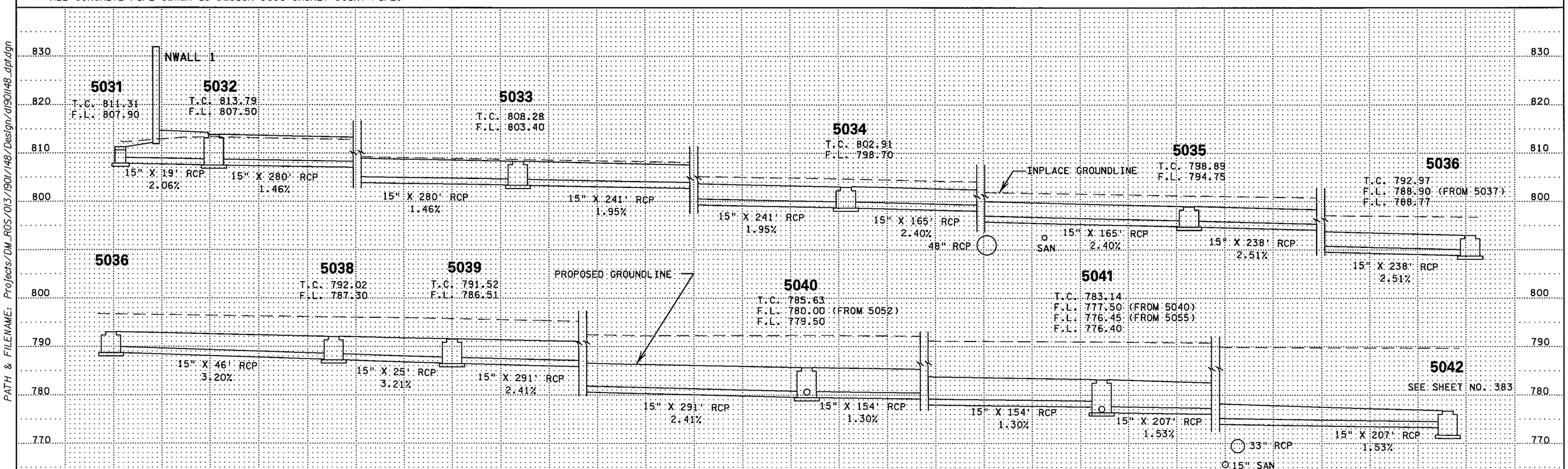

5031	5034	5038	5041
5032	5035	5039	
5033	5036	5040	

S.P. 179-020-031 S.P. 019-605-028

6 OF 31

DRAINAGE TABULATIONS AND PROFILES

DRAWN BY: CT | CHECKED BY: HS | CERTIFIED BY Scott Cochran LICENSED PROFESSIONAL ENGINEER | LIC. NO. 23344 DATE 6/18/12

STATE PROJ. NO. 1901-148 (T.H. 13) SHEET NO. 382 OF 442 SHEETS

PLOTTED/REVISED: 12-JUN-2012 15:14
DISTRICT #: METRO
IPLOT NAME: dl901148_dpt6
PATH & FILENAME: Projects/DM_ROS/013/1901/148/Design/dl901148_dpt.dgn

DRAINAGE TABULATION (THIS SHEET ONLY)

STRUCTURE NO. FLOWS FROM	STRUCTURE NO. FLOWS TO	STRUCTURE LOCATION ALIGN.	STATION	OFFSET		DRAINAGE STRUCTURES TYPE	PAY HEIGHT F LIN FT	SD-48 LIN FT	48-4020 LIN FT	66-4020 LIN FT	72-4020 LIN FT	CASTING ASSEMBLY TYPE (1)	CONE TYPE	STEPS REQ'D	TOP OF CASTING ELEV	OUTLET ELEV.	INLET ELEV. (2)	24" RCP CL II LIN FT	33" RCP CL III LIN FT	36" RCP CL III LIN FT	REMARKS
5042		SERAMP	68+47.71	7.1'	LT							D - 4			776.68						(3)
15042	5043	SERAMP	68+47.71	7.9'	LT	CB		4.9						YES		771.68	764.32	311			(4)
5043		13EB	696+08.43	23.0'	RT							B - 9			769.02						(3)
15043	5044	13EB	696+08.43	22.2'	RT	CB			5.8					YES		763.17	760.03	232			(4)
5044		13EB	693+78.36	23.0'	RT							B - 9			765.60						(3)
15044	5045	13EB	693+78.36	22.0'	RT	CB	5.6						B	YES		759.98	758.51	130			(4)
5045		13EB	692+49.11	23.0'	RT							B - 9			764.27						(3)
15045	5046	13EB	692+49.11	22.0'	RT	CB	6.2						B	YES		757.97	756.04	130			(4)
5046		13EB	691+19.59	23.0'	RT							B - 9			763.35						(3)
15046	5047	13EB	691+19.59	21.4'	RT	CB				9.5				YES		753.73	752.52		219		(4)
5047		13EB	689+02.54	23.0'	RT							B - 9			762.26						(3)
15047	5048	13EB	689+02.54	21.4'	RT	CB				9.9				YES		752.24	751.51			211	(4)
5048		13EB	686+92.99	23.0'	RT							B - 9			761.09						(3)
15048	5049	13EB	686+92.99	21.4'	RT	CB				9.5				YES		751.49	750.01			312	(4)
5049		13EB	683+79.99	23.0'	RT							B - 9			757.07						(3)
15049	5407	13EB	683+81.54	22.1'	RT	CB					10.2			YES		746.77	746.43			36	(4)(5)
TOTALS							11.8	4.9	5.8	28.9	10.2							803	219	559	

NOTE: STA. AND OFFSET IS AT
- CENTER OF STRUCTURE UNLESS NOTED OTHERWISE.
- END OF RC APRON, CS SAFETY APRON
- END OF BARREL, CS PIPE

FLOWLINE (F.L.) ELEVATIONS ARE AT CENTER OF STRUCTURE ON PROFILES.
INLET AND OUTLET ELEVATIONS ON TABULATION ARE AT EDGE OF STRUCTURE.

ALL CONCRETE PIPE SEWER IS DESIGN 3006 GASKET JOINT PIPE.

(1) FOR CASTING ASSEMBLY KEY & SUMMARY, SEE SHEET NO. 411.
(2) INLET ELEVATION AT DOWN-STREAM STRUCTURE.
(3) CENTER OF CASTING.
(4) CENTER OF STRUCTURE.
(5) TEE CONNECTION TO 72" RCP AT STRUCTURE NO. 5407 INCLUDED WITH DESIGN SPECIAL 8. FOR DETAILS, SEE SHEET NO. 418.

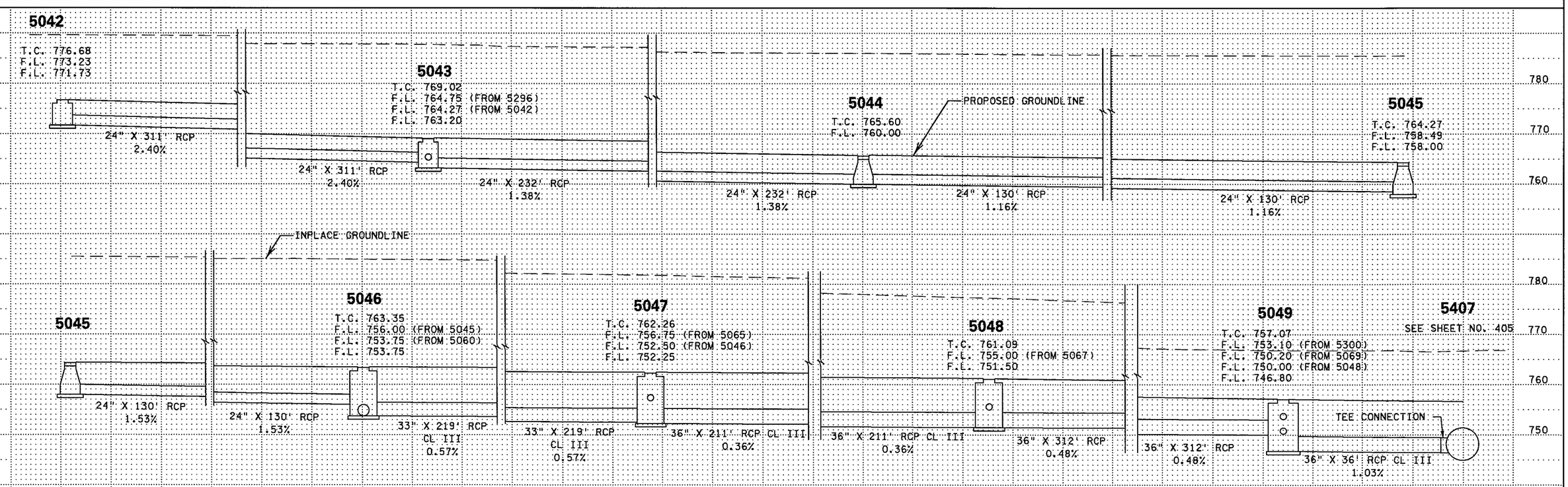

5042 5045 5048
5043 5046 5049
5044 5047

S.P. 179-020-031 S.P. 019-605-028

7 OF 31

DRAINAGE TABULATIONS AND PROFILES

DRAWN BY: CT | CHECKED BY: HS | CERTIFIED BY Scott Cashtrom LICENSED PROFESSIONAL ENGINEER | LIC. NO. 23344 DATE 6/18/12

STATE PROJ. NO. 1901-148 (T.H. 13) SHEET NO. 383 OF 442 SHEETS

PLOTTED/REVISED: 12-JUN-2012 15:14
DISTRICT #: METRO
IPLOT NAME: d190148_dpf7
PATH & FILENAME: Projects/DM_ROS/013/1901/148/Design/d190148_dpt.dgn

DRAINAGE TABULATION (THIS SHEET ONLY)

STRUCTURE NO. FLOWS FROM	STRUCTURE NO. FLOWS TO	STRUCTURE LOCATION ALIGN.	STATION	OFFSET	DRAINAGE STRUCTURES TYPE	PAY HEIGHT H LIN FT	PAY HEIGHT SD-48 LIN FT	PAY HEIGHT 48-4020 LIN FT	CASTING ASSEMBLY TYPE (1)	CONE TYPE	STEPS REQ'D	TOP OF CASTING ELEV	OUTLET ELEV.	INLET ELEV. (2)	15" RCP CL II LIN FT	15" RCP CL III LIN FT	18" RCP CL II LIN FT	REMARKS
5020	5021	13WB	708+07.57	33.0' LT	CB	3.1			B - 9			797.38	794.20	788.46	211			
5021		13WB	705+97.01	33.0' LT					B - 9			791.80						(3)
15021	5022	13WB	705+97.01	32.2' LT	CB		3.6						788.14	781.36	229			(4)
5022		13WB	703+66.66	33.0' LT					B - 9			785.47						(3)
15022	5023	13WB	703+66.66	32.2' LT	CB		4.1						781.25	775.44		227		(4)
5023		13WB	701+36.84	33.0' LT					B - 9			782.58						(3)
15023	5024	13WB	701+36.84	32.2' LT	CB			7.2			YES		775.34	770.55		201		(4)
5024		13WB	699+33.87	33.0' LT					B - 9			774.00						(3)
15024	5025	13WB	699+33.87	32.2' LT	CB		5.0				YES		768.96	764.26	214			(4)
5025		13WB	697+17.96	33.0' LT					B - 9			768.37						(3)
15025	5026	13WB	697+17.96	32.2' LT	CB		4.1						764.18	760.34	199			(4)
5026		13WB	695+16.45	33.0' LT					B - 9			764.56						(3)
15026	5027	13WB	695+16.45	32.2' LT	CB		4.4						760.12	757.70			176	(4)
5027		13WB	693+38.06	33.0' LT					B - 9			762.10						(3)
15027	5028	13WB	693+38.06	32.2' LT	CB		4.4						757.64	755.41			163	(4)
TOTALS						3.1	25.6	7.2							853	428	339	

NOTE: STA. AND OFFSET IS AT
- CENTER OF STRUCTURE UNLESS NOTED OTHERWISE.
- END OF RC APRON, CS SAFETY APRON
- END OF BARREL, CS PIPE

FLOWLINE (F.L.) ELEVATIONS ARE AT CENTER OF STRUCTURE ON PROFILES.
INLET AND OUTLET ELEVATIONS ON TABULATION ARE AT EDGE OF STRUCTURE.

ALL CONCRETE PIPE SEWER IS DESIGN 3006 GASKET JOINT PIPE.

(1) FOR CASTING ASSEMBLY KEY & SUMMARY, SEE SHEET NO. 411.
(2) INLET ELEVATION AT DOWN-STREAM STRUCTURE.
(3) CENTER OF CASTING.
(4) CENTER OF STRUCTURE.

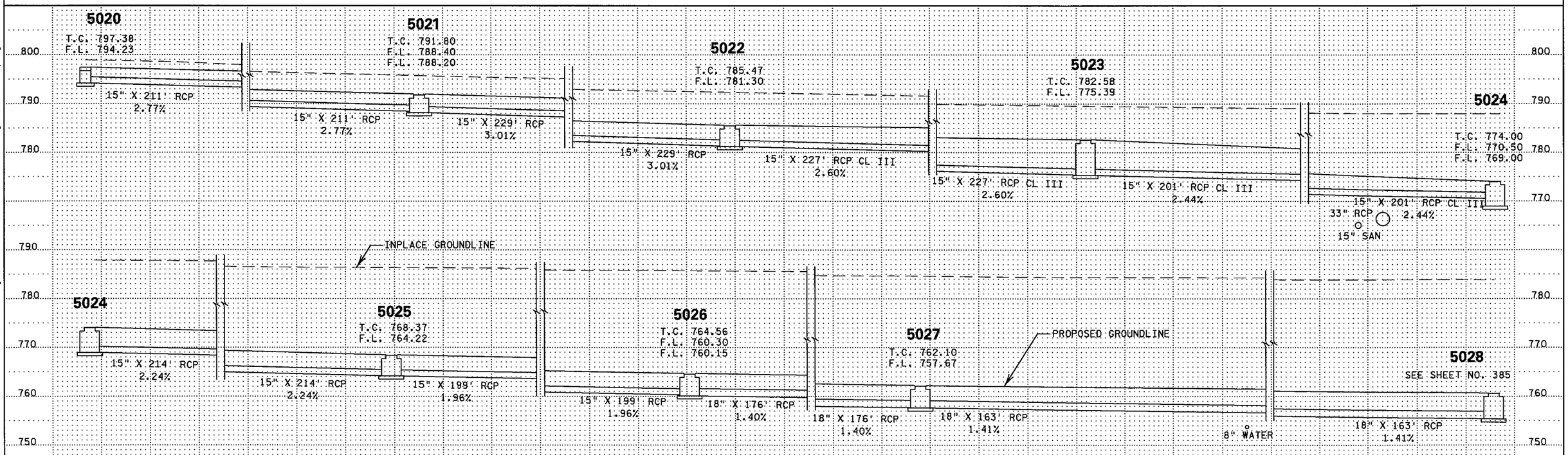

5020	5023	5026
5021	5024	5027
5022	5025	

S.P. 179-020-031 S.P. 019-605-028

8 OF 31

DRAINAGE TABULATIONS AND PROFILES

DRAWN BY: CT | CHECKED BY: HS | CERTIFIED BY Scott Calton LICENSED PROFESSIONAL ENGINEER | LIC. NO. 23344 | DATE 6/18/12

STATE PROJ. NO. 1901-148 (T.H. 13) SHEET NO. 384 OF 442 SHEETS

PLOTTED/REVISED: 12-JUN-2012 15:14
DISTRICT #: METRO
IPLOT NAME: d190l148_dpt8
PATH & FILENAME: Projects/DM_ROS/013/1901/148/Design/d190l148_dpt.dgn

DRAINAGE TABULATION (THIS SHEET ONLY)

STRUCTURE NO. FLOWS FROM	STRUCTURE NO. FLOWS TO	STRUCTURE LOCATION ALIGN.	STATION	OFFSET	DRAINAGE STRUCTURES TYPE	PAY HEIGHT H LIN FT	PAY HEIGHT SD-48 LIN FT	PAY HEIGHT 48-4020 LIN FT	PAY HEIGHT 60-4020 LIN FT	CASTING ASSEMBLY TYPE (1)	CONE TYPE	STEPS REQ'D	TOP OF CASTING ELEV	OUTLET ELEV.	INLET ELEV. (2)	15" RCP CL II LIN FT	24" RCP CL II LIN FT	27" RCP CL III LIN FT	REMARKS
5028		13WB	691+73.31	33.0' LT						B - 9			760.58						(3)
15028	5029	13WB	691+73.31	32.2' LT	CB		5.1					YES		755.37	755.01		69		(4)
5029		13WB	691+03.68	33.0' LT						B - 9			760.16						(3)
15029	5030	13WB	691+03.68	34.3' LT	CB				5.1			YES		754.97	754.52		48		(4)
5030		13WB	691+09.79	14.0' RT						B - 9			762.16						(3)
15030	5060	13WB	691+09.79	13.2' RT	CB			7.7				YES		754.38	754.15		8		(4)
5037	5036	13EB	706+51.42	31.8' RT	CB	3.4				M - 11			792.64	789.28	788.94	19			
5050	5051	13EB	706+79.07	18.0' LT	CB	3.5				B - 9			794.01	790.48	785.20	197			
5051		13EB	704+82.55	18.0' LT						B - 9			789.10						(3)
15051	5052	13EB	704+82.55	17.2' LT	CB		3.9							785.10	780.42	209			(4)
5052		13EB	702+72.75	18.0' LT						B - 9			783.52						(3)
15052	5040	13EB	702+72.75	17.2' LT	CB		3.2							780.26	780.01	46			(4)
5053		13WB	704+59.84	14.9' RT						B - 9			789.38						(3)
15053	5051	13WB	704+59.84	14.1' RT	CB		3.9							785.36	785.22	8			(4)
5054		13WB	701+02.22	14.0' RT						B - 9			780.06						(3)
15054	5055	13WB	701+02.22	13.2' RT	CB		3.2							776.83	776.67	8			(4)
5055		13EB	701+21.11	18.0' LT						B - 9			779.73						(3)
15055	5041	13EB	701+21.11	17.2' LT	CB		3.1							776.57	776.46	51			(4)
5060		13EB	691+17.75	18.0' LT						B - 9			762.30						(3)
15060	5046	13EB	691+17.75	17.2' LT	CB				8.2			YES		753.98	753.77			38	(4)
TOTALS						6.9	22.4	7.7	13.3							538	125	38	

NOTE: STA. AND OFFSET IS AT
- CENTER OF STRUCTURE UNLESS NOTED OTHERWISE.
- END OF RC APRON, CS SAFETY APRON
- END OF BARREL, CS PIPE

FLOWLINE (F.L.) ELEVATIONS ARE AT CENTER OF STRUCTURE ON PROFILES.
INLET AND OUTLET ELEVATIONS ON TABULATION ARE AT EDGE OF STRUCTURE.

ALL CONCRETE PIPE SEWER IS DESIGN 3006 GASKET JOINT PIPE.

(1) FOR CASTING ASSEMBLY KEY & SUMMARY, SEE SHEET NO. 411.
(2) INLET ELEVATION AT DOWN-STREAM STRUCTURE.
(3) CENTER OF CASTING.
(4) CENTER OF STRUCTURE.

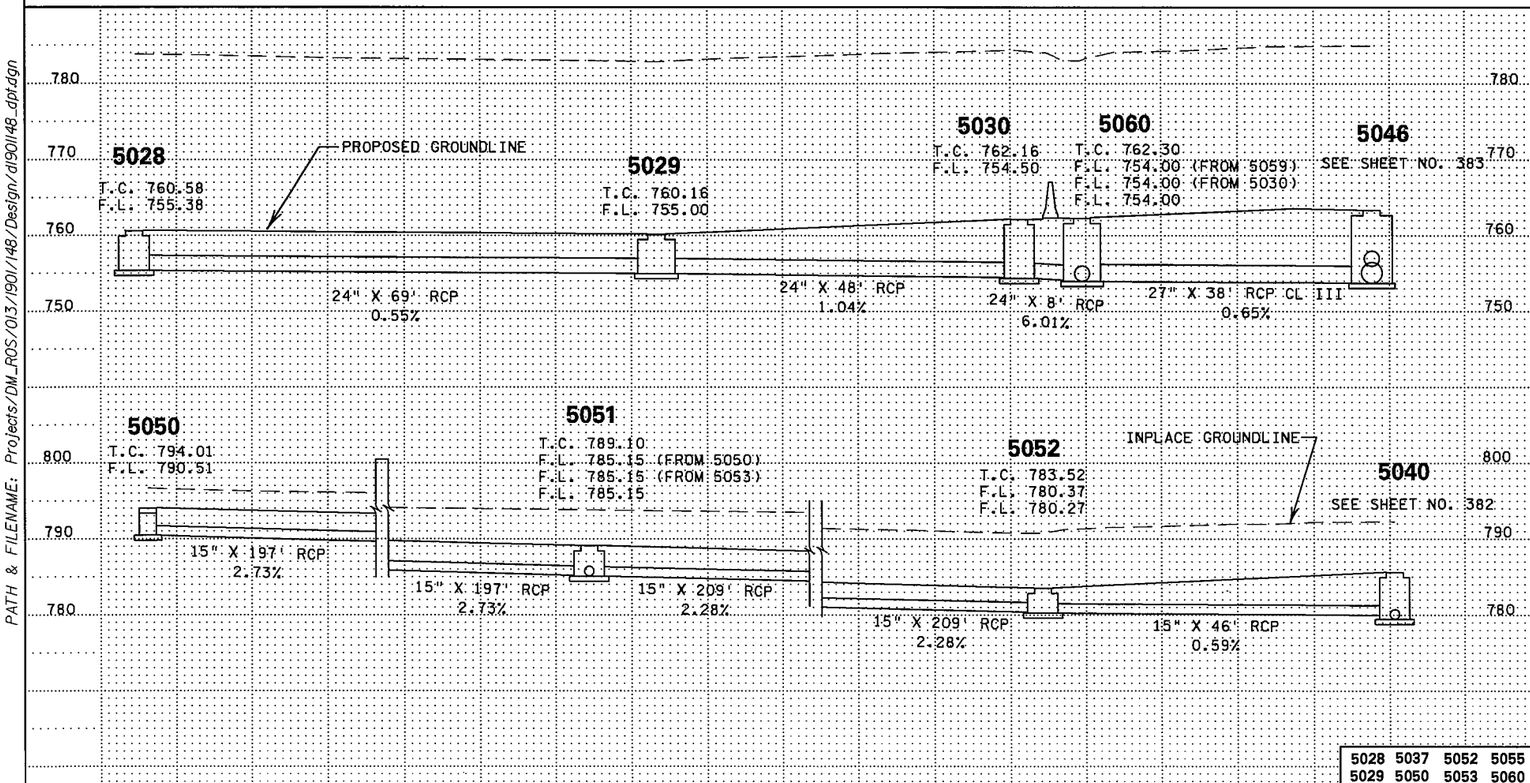

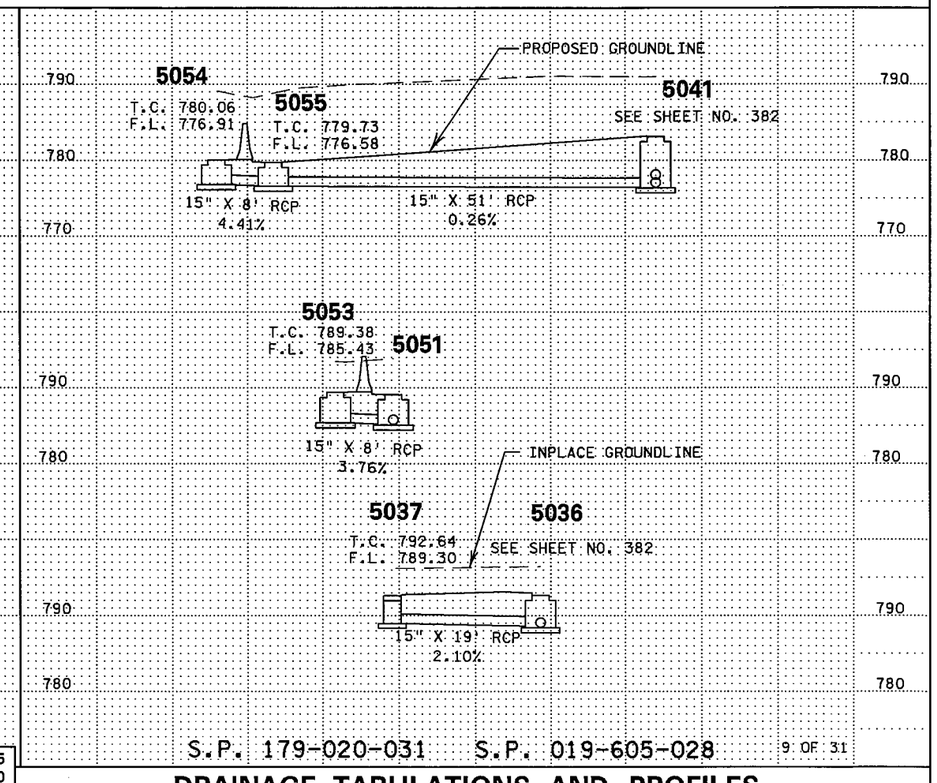

5028	5037	5052	5055
5029	5050	5053	5060
5030	5051	5054	

S.P. 179-020-031 S.P. 019-605-028

DRAINAGE TABULATIONS AND PROFILES

DRAWN BY: CT | CHECKED BY: HS | CERTIFIED BY Scott Codatto LICENSED PROFESSIONAL ENGINEER | LIC. NO. 23344 | DATE 6/18/12

STATE PROJ. NO. 1901-148 (T.H. 13) SHEET NO. 385 OF 442 SHEETS

PLOTTED/REVISED: 12-JUN-2012 15:14
DISTRICT #: METRO
IPLOT NAME: d190l148_dpl9
PATH & FILENAME: Projects/DM_ROS/013/190l/148/Design/d190l148_dpt.dgn

DRAINAGE TABULATION (THIS SHEET ONLY)

STRUCTURE NO. FLOWS FROM	STRUCTURE NO. FLOWS TO	STRUCTURE LOCATION ALIGN.	STATION	OFFSET		DRAINAGE STRUCTURES TYPE	PAY HEIGHT H LIN FT	SD-48 LIN FT	48-4020 LIN FT	54-4020 LIN FT	CASTING ASSEMBLY TYPE (1)	CONE TYPE	STEPS REQ'D	TOP OF CASTING ELEV	OUTLET ELEV.	INLET ELEV. (2)	15" RCP CL II LIN FT	18" RCP CL II LIN FT	24" RCP CL II LIN FT	REMARKS
5056	5057	13EB	699+52.75	18.0'	LT	CB	3.9				B - 9			775.52	771.52	766.57	153			
5057		13EB	697+99.72	18.0'	LT						B - 9			771.82						(3)
15057	5058	13EB	697+99.72	17.2'	LT	CB			5.3				YES		766.46	761.09	287			(4)
5058		13EB	695+10.79	18.0'	LT						B - 9			766.37						(3)
15058	5059	13EB	695+10.79	16.9'	LT	CB				5.5			YES		760.74	755.21		243		(4)
5059		13EB	692+66.42	18.0'	LT						B - 9			763.38						(3)
15059	5060	13EB	692+66.42	16.9'	LT	CB				8.3			YES		754.98	754.02			148	(4)
5061		13WB	697+85.15	14.0'	RT						B - 9			771.84						(3)
15061	5057	13WB	697+85.15	13..2	RT	CB		3.7							768.05	767.70	8			(4)
5062		13WB	695+00.02	14.0'	RT						B - 9			766.26						(3)
15062	5058	13WB	695+00.02	13.2'	RT	CB		3.5							762.65	762.37	8			(4)
5063		13WB	692+58.18	14.0'	RT						B - 9			763.23						(3)
15063	5059	13WB	692+58.18	13.2'	RT	CB		3.7							759.49	759.13	8			(4)
5292	5293	SERAMP	62+44.66	7.0'	LT	CB	3.3				D - 4			777.84	774.49	769.37	126			
5293		SERAMP	63+70.39	7.0'	LT						D - 4			773.37						(3)
15293	5294	SERAMP	63+70.39	6.2'	LT	CB		4.0							769.25	767.32	103			(4)
5294		SERAMP	64+73.55	7.0'	LT						D - 4			771.56						(3)
15294	5295	SERAMP	64+73.55	6.2'	LT	CB		4.2							767.24	766.36	44			(4)
5295		SERAMP	65+17.49	7.0'	LT						D - 4			771.29						(3)
15295	5296	SERAMP	65+17.49	6.2'	LT	CB		5.0					YES		766.22	765.60	16			(4)
5296		SERAMP	65+33.91	7.0'	LT						D - 4			771.15						(3)
15296	5043	SERAMP	65+33.91	6.2'	LT	CB			5.7				YES		765.42	764.83	19			(4)
TOTALS							7.2	24.1	11.0	13.8							772	243	148	

NOTE: STA. AND OFFSET IS AT
- CENTER OF STRUCTURE UNLESS NOTED OTHERWISE.
- END OF RC APRON, CS SAFETY APRON
- END OF BARREL, CS PIPE

FLOWLINE (F.L.) ELEVATIONS ARE AT CENTER OF STRUCTURE ON PROFILES.
INLET AND OUTLET ELEVATIONS ON TABULATION ARE AT EDGE OF STRUCTURE.

ALL CONCRETE PIPE SEWER IS DESIGN 3006 GASKET JOINT PIPE.

(1) FOR CASTING ASSEMBLY KEY & SUMMARY, SEE SHEET NO. 411.
(2) INLET ELEVATION AT DOWN-STREAM STRUCTURE.
(3) CENTER OF CASTING.
(4) CENTER OF STRUCTURE.

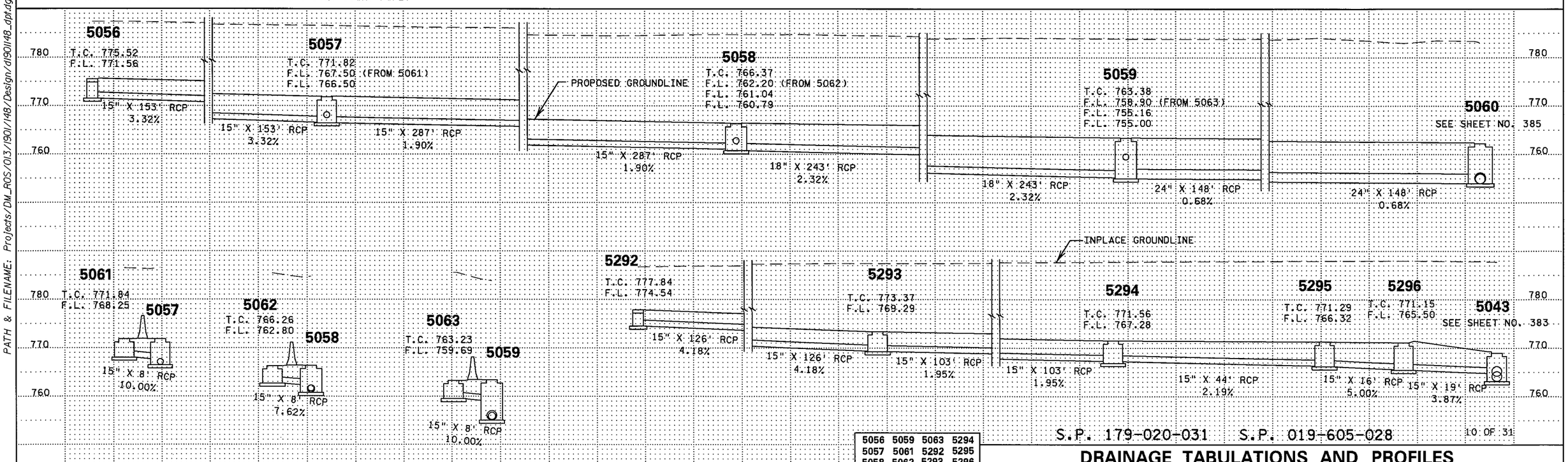

5056	5059	5063	5294
5057	5061	5292	5295
5058	5062	5293	5296

S.P. 179-020-031 S.P. 019-605-028

10 OF 31

DRAINAGE TABULATIONS AND PROFILES

DRAWN BY: CT | CHECKED BY: HS | CERTIFIED BY Scott Coldiron LICENSED PROFESSIONAL ENGINEER | LIC. NO. 23344 DATE 6/18/12

STATE PROJ. NO. 1901-148 (T.H. 13) SHEET NO. 386 OF 442 SHEETS

PLOTTED/REVISED: 12-JUN-2012 15:14
DISTRICT #: METRO
IPLOT NAME: d190ll48_dpt10
PATH & FILENAME: Projects/DM_ROS/013/1901/148/Design/d190ll48_dpt.dgn

DRAINAGE TABULATION (THIS SHEET ONLY)

STRUCTURE NO. FLOWS FROM	STRUCTURE NO. FLOWS TO	STRUCTURE LOCATION ALIGN.	STATION	OFFSET	DRAINAGE STRUCTURES TYPE	PAY HEIGHT H LIN FT	PAY HEIGHT SD-48 LIN FT	CASTING ASSEMBLY TYPE (1)	CONE TYPE	STEPS REQ'D	TOP OF CASTING ELEV	OUTLET ELEV.	INLET ELEV. (2)	15" RCP CL II LIN FT	REMARKS
5064		13WB	688+99.62	14.0' RT				B - 9			761.10				(3)
15064	5065	13WB	688+99.62	13.2' RT	CB		3.5					757.56	757.20	8	(4)
5065		13EB	689+02.68	18.0' LT				B - 9			761.22				(3)
15065	5047	13EB	689+02.68	17.2' LT	CB		4.2					756.99	756.77	39	(4)
5066		13WB	686+91.92	14.0' RT				B - 9			760.06				(3)
15066	5067	13WB	686+91.92	13.2' RT	CB		3.7					756.32	756.17	8	(4)
5067		13EB	686+92.43	18.0' LT				B - 9			760.04				(3)
15067	5048	13EB	686+92.43	17.2' LT	CB		3.9					756.03	755.08	39	(4)
5068		13WB	683+81.81	14.0' RT				B - 9			756.84				(3)
15068	5069	13WB	683+81.81	13.2' RT	CB		4.0					752.79	752.62	8	(4)
5069		13EB	683+80.64	22.3' LT				B - 9			757.05				(3)
15069	5049	13EB	683+80.64	21.5' LT	CB		4.6					752.42	750.36	44	(4)
5297	5298	SWRAMP	57+12.81	19.0' LT	CB	3.9		D - 4			782.82	778.81	771.87	158	
5298		SWRAMP	55+54.80	19.0' LT				D - 4			775.73				(3)
15298	5299	SWRAMP	55+54.80	18.2' LT	CB		4.0					771.69	763.59	179	(4)
5299		SWRAMP	53+76.54	7.2' LT				D - 4			767.00				(3)
15299	5300	SWRAMP	53+76.54	8.0' LT	CB		3.5					763.40	756.07	146	(4)
5300		SWRAMP	52+30.25	7.0' LT				D - 4			759.91				(3)
15300	5049	SWRAMP	52+30.25	7.8' LT	CB		5.0			YES		754.83	753.30	26	(4)
TOTALS						3.9	36.4							655	

NOTE: STA. AND OFFSET IS AT
- CENTER OF STRUCTURE UNLESS NOTED OTHERWISE.
- END OF RC APRON, CS SAFETY APRON
- END OF BARREL, CS PIPE

FLOWLINE (F.L.) ELEVATIONS ARE AT CENTER OF STRUCTURE ON PROFILES.
INLET AND OUTLET ELEVATIONS ON TABULATION ARE AT EDGE OF STRUCTURE.
ALL CONCRETE PIPE SEWER IS DESIGN 3006 GASKET JOINT PIPE.

(1) FOR CASTING ASSEMBLY KEY & SUMMARY, SEE SHEET NO. 411.
(2) INLET ELEVATION AT DOWN-STREAM STRUCTURE.
(3) CENTER OF CASTING.
(4) CENTER OF STRUCTURE.

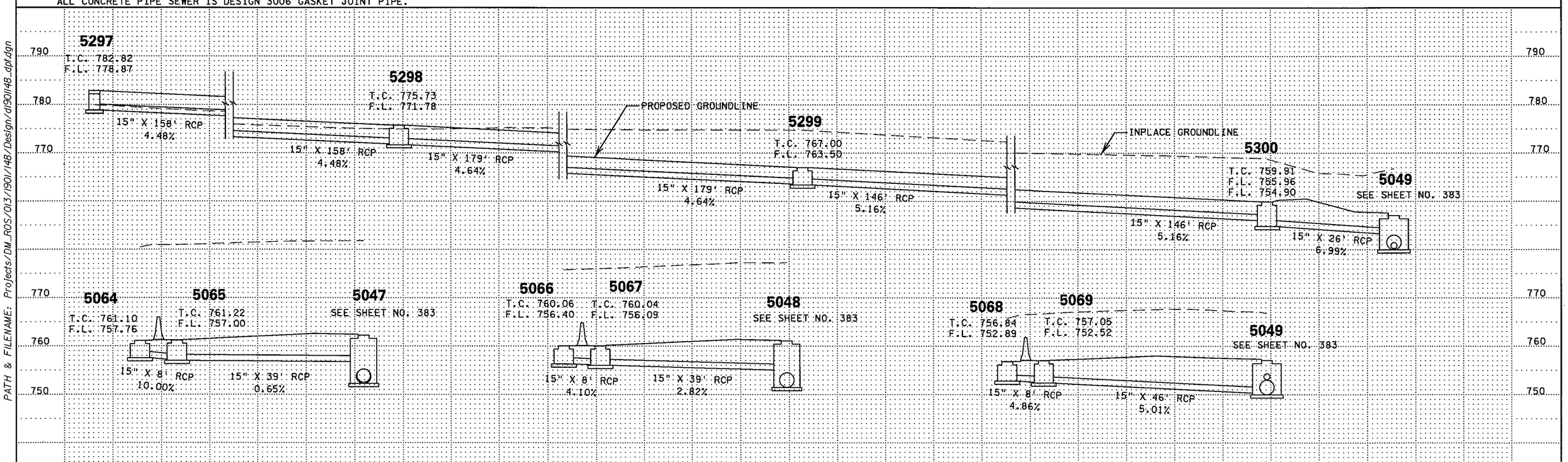

5064	5067	5297	5300
5065	5068	5298	
5066	5069	5299	

S.P. 179-020-031 S.P. 019-605-028

11 OF 31

DRAINAGE TABULATIONS AND PROFILES

DRAWN BY: CT | CHECKED BY: HS | CERTIFIED BY Scott Corlstrom LICENSED PROFESSIONAL ENGINEER | LIC. NO. 23344 DATE 6/18/12

STATE PROJ. NO. 1901-148 (T.H. 13) SHEET NO. 387 OF 442 SHEETS

PLOTTED/REVISED: 12-JUN-2012 15:17
DISTRICT #: METRO
IPLOT NAME: dl90ll148_dptll
PATH & FILENAME: Projects/DM_ROS/013/190l/148/Design/dl90ll148_dpt.dgn

DRAINAGE TABULATION (THIS SHEET ONLY)

STRUCTURE NO. FLOWS FROM	STRUCTURE NO. FLOWS TO	STRUCTURE LOCATION ALIGN.	STATION	OFFSET	DRAINAGE STRUCTURES TYPE	PAY HEIGHT H LIN FT	SD-48 LIN FT	48-4020 LIN FT	54-4020 LIN FT	66-4020 LIN FT	CASTING ASSEMBLY TYPE (1)	CONE TYPE	STEPS REQ'D	TOP OF CASTING ELEV	OUTLET ELEV.	INLET ELEV. (2)	15" RCP CL II LIN FT	18" RCP CL II LIN FT	24" RCP CL II LIN FT	36" RCP-A CL IIA LIN FT	REMARKS
5093		NWLOOP1	81+89.21	13.0' RT							B - 9			755.49							(3)
15093	5094	NWLOOP1	81+89.21	11.5' RT	CB					5.4			YES		749.99	749.51			103		(4)
5094		13WB	685+50.25	50.4' LT							M - 11			754.60							(3)
15094	5095	13WB	685+50.25	51.2' LT	CB			5.2					YES		749.48	747.75			177		(4)
5095		13WB	683+73.49	64.5' LT							M - 11			752.20							(3)
15095	5408	13WB	683+73.49	65.6' LT	CB				4.5						747.72	747.50				59	(4)
5225	5226	NWRAMP	70+86.25	16.5' RT	CB	3.9					D - 4			764.62	760.65	759.10	87				
5226		NWRAMP	71+72.75	12.0' RT							D - 4			763.01							(3)
15226	5227	NWRAMP	71+72.75	11.2' RT	CB		4.1								758.79	758.47	17				(4)
5227		NWRAMP	71+72.38	7.0' LT							A - 7D			763.16							(3)
15227	5228	NWRAMP	71+72.38	6.2' LT	MH		5.2						YES		758.36	756.56	67				(4)
5228		NWRAMP	72+40.94	7.0' LT							B - 9			761.40							(3)
15228	5229	NWRAMP	72+40.94	6.2' LT	CB			5.4					YES		755.94	754.56	52				(4)
5229		NWLOOP1	84+92.71	13.0' RT							B - 9			758.50							(3)
15229	5230	NWLOOP1	84+92.71	12.2' RT	CB		4.5								753.96	751.87	102				(4)
5230		NWLOOP1	83+80.25	13.0' RT							B - 9			755.78							(3)
15230	5231	NWLOOP1	83+80.25	12.2' RT	CB		3.9								751.81	750.80	96				(4)
5231		NWLOOP1	82+74.39	13.0' RT							B - 9			754.95							(3)
15231	5093	NWLOOP1	82+74.39	12.2' RT	CB		4.1								750.77	750.51		78			(4)
TOTALS						3.9	21.8	10.6	4.5	5.4							421	78	280	59	

NOTE: STA. AND OFFSET IS AT
- CENTER OF STRUCTURE UNLESS NOTED OTHERWISE.
- END OF RC APRON, CS SAFETY APRON
- END OF BARREL, CS PIPE

FLOWLINE (F.L.) ELEVATIONS ARE AT CENTER OF STRUCTURE ON PROFILES.
INLET AND OUTLET ELEVATIONS ON TABULATION ARE AT EDGE OF STRUCTURE.
ALL CONCRETE PIPE SEWER IS DESIGN 3006 GASKET JOINT PIPE.

(1) FOR CASTING ASSEMBLY KEY & SUMMARY, SEE SHEET NO. 411.
(2) INLET ELEVATION AT DOWN-STREAM STRUCTURE.
(3) CENTER OF CASTING.
(4) CENTER OF STRUCTURE.

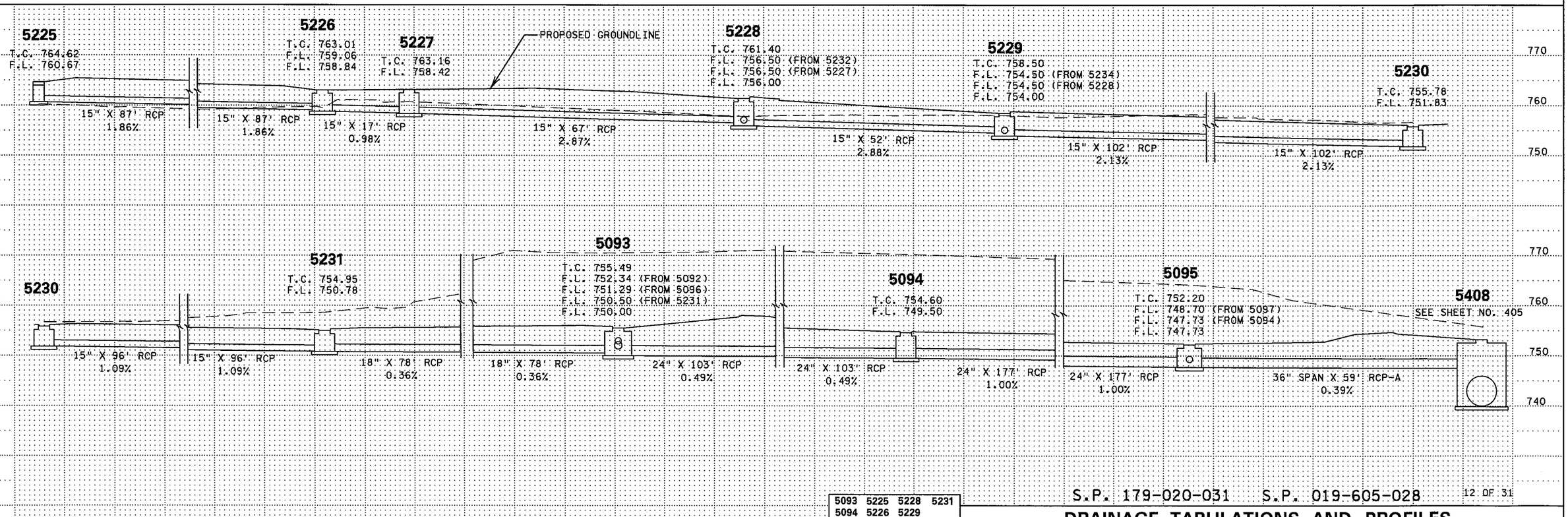

5093	5225	5228	5231
5094	5226	5229	
5095	5227	5230	

S.P. 179-020-031 S.P. 019-605-028

12 OF 31

DRAINAGE TABULATIONS AND PROFILES

DRAWN BY: CT | CHECKED BY: HS | CERTIFIED BY Scott Coulthard LICENSED PROFESSIONAL ENGINEER | LIC. NO. 23344 DATE 6/18/12

STATE PROJ. NO. 1901-148 (T.H. 13) SHEET NO. 388 OF 442 SHEETS

PLOTTED/REVISED: 12-JUN-2012 15:17
DISTRICT #: METRO
IPLOT NAME: d1901148_dpt12
PATH & FILENAME: Projects/DM_ROS/013/1901/148/Design/d1901148_dpt.dgn

DRAINAGE TABULATION (THIS SHEET ONLY)

STRUCTURE NO. FLOWS FROM	STRUCTURE NO. FLOWS TO	STRUCTURE LOCATION ALIGN.	STRUCTURE LOCATION STATION	STRUCTURE LOCATION OFFSET	DRAINAGE STRUCTURES TYPE	PAY HEIGHT H LIN FT	PAY HEIGHT SD-48 LIN FT	CASTING ASSEMBLY TYPE (1)	CONE TYPE	STEPS REQ'D	TOP OF CASTING ELEV	OUTLET ELEV.	INLET ELEV. (2)	15" RCP CL II LIN FT	18" RCP CL II LIN FT	APRON EACH	APRON TYPE	GUIDE POSTS TYPE B EACH	RANDOM RIPRAP CL II (6) CU YD	GEOTEXTILE FILTER TYPE II SQ YD	REMARKS
5089	5090	13WB	689+52.08	33.0' LT	CB	3.1		B - 9			758.86	755.70	755.20	52							
5090		13WB	688+99.49	33.0' LT				B - 9			759.13										(3)
15090	5091	13WB	688+99.49	32.2' LT	CB		3.9					755.16	754.21	99							(4)
5091		13WB	687+99.25	33.3' LT				B - 9			758.63										(3)
15091	5092	13WB	687+99.25	32.5' LT	CB		4.4					754.16	753.47	55							(4)
5092		NWLOOP1	80+71.59	13.0' RT				B - 9			757.73										(3)
15092	5093	NWLOOP1	80+71.59	12.2' RT	CB		4.2					753.42	752.37	110							(4)
5096	5093	NWLOOP1	81+73.06	45.0' RT	APR						751.81		751.33		30	1	18" RC APRON	1			(5)
5097	5095	13WB	683+74.64	23.0' LT	CB	4.2		B - 9			756.16	751.92	748.86	42							
5098	5099	NWRAMP	77+57.06	21.9' LT	CB	3.4		M - 11			752.55	749.14	748.92	31							
5099		NWRAMP	77+51.35	9.0' RT				D - 4			752.36										(3)
15099	5100	NWRAMP	77+51.35	8.2' RT	CB		3.4					748.88	748.75	12							(4)(5)
5100		NWRAMP	77+52.06	26.0' RT	APR							748.75				1	15" RC APRON	1	3.1	9.3	
5232	5228	NWRAMP	72+97.19	7.0' LT	CB	3.1		B - 9			760.04	756.88	756.51	54							
5233	5234	NWLOOP2	86+14.10	21.0' RT	CB	3.1		B - 9			763.44	760.29	759.40	31							
5234		NWLOOP1	86+08.73	12.2' RT				B - 9			763.29										(3)
15234	5229	NWLOOP1	86+08.73	13.0' RT	CB		4.8					758.36	754.58	105							(4)
TOTALS						16.9	20.7							591	30	2		2	3.1	9.3	

NOTE: STA. AND OFFSET IS AT
- CENTER OF STRUCTURE UNLESS NOTED OTHERWISE.
- END OF RC APRON, CS SAFETY APRON
- END OF BARREL, CS PIPE

FLOWLINE (F.L.) ELEVATIONS ARE AT CENTER OF STRUCTURE ON PROFILES.
INLET AND OUTLET ELEVATIONS ON TABULATION ARE AT EDGE OF STRUCTURE.

ALL CONCRETE PIPE SEWER IS DESIGN 3006 GASKET JOINT PIPE.

(1) FOR CASTING ASSEMBLY KEY & SUMMARY, SEE SHEET NO. 411.
(2) INLET ELEVATION AT DOWN-STREAM STRUCTURE.
(3) CENTER OF CASTING.
(4) CENTER OF STRUCTURE.
(5) TIE LAST 3 JOINTS AT APRON END - INCIDENTAL.
(6) FOR DETAILS, SEE STANDARD PLATE 3133.
RIPRAP IS TO EXTEND 2 FEET UNDER THE PIPE APRON.

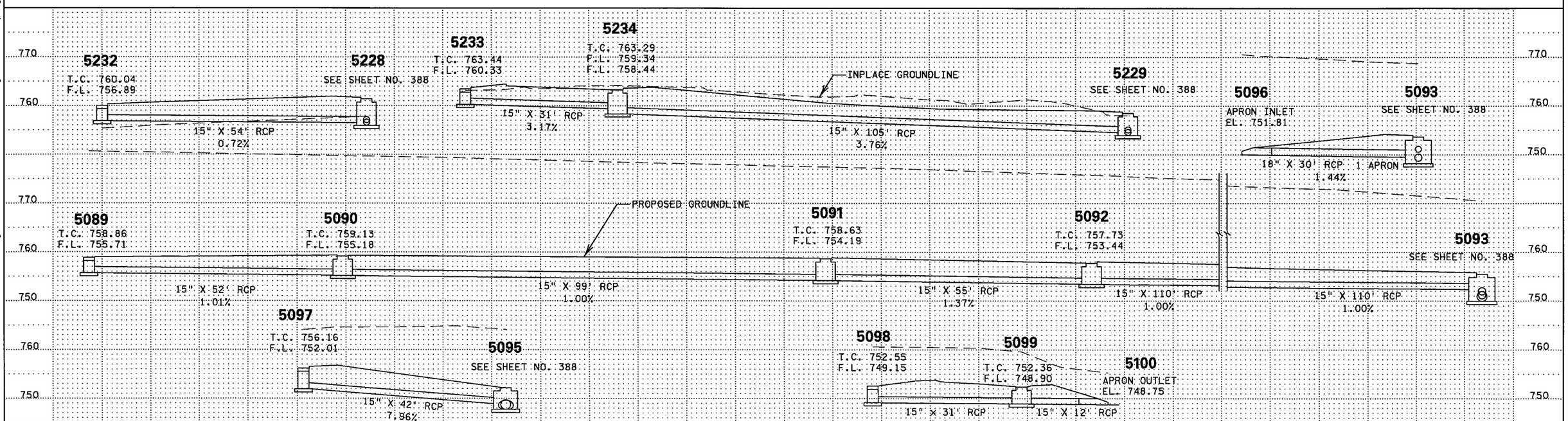

S.P. 179-020-031 S.P. 019-605-028

13 OF 31

5089	5092	5098	5232
5090	5096	5099	5233
5091	5097	5100	5234

DRAINAGE TABULATIONS AND PROFILES

DRAWN BY: CT | CHECKED BY: HS | CERTIFIED BY Scott Coughlin LICENSED PROFESSIONAL ENGINEER | LIC. NO. 23344 DATE 6/18/12

STATE PROJ. NO. 1901-148 (T.H. 13) SHEET NO. 389 OF 442 SHEETS

PLOTTED/REVISED: 12-JUN-2012 15:17
DISTRICT #: METRO
IPLOT NAME: d190l148_dpt13
PATH & FILENAME: Projects/DM_ROS/013/190l/148/Design/d190l148_dpt.dgn

DRAINAGE TABULATION (THIS SHEET ONLY)

STRUCTURE NO. FLOWS FROM	STRUCTURE NO. FLOWS TO	STRUCTURE LOCATION ALIGN.	STRUCTURE LOCATION STATION	STRUCTURE LOCATION OFFSET	DRAINAGE STRUCTURES TYPE	PAY HEIGHT H LIN FT	PAY HEIGHT G LIN FT	PAY HEIGHT SD-48 LIN FT	PAY HEIGHT 54-4020 LIN FT	PAY HEIGHT 60-4020 LIN FT	CASTING ASSEMBLY TYPE (1)	CONE TYPE	STEPS REQ'D	TOP OF CASTING ELEV	OUTLET ELEV.	INLET ELEV. (2)	15" RCP CL II LIN FT	18" RCP CL II LIN FT	24" RCP CL II LIN FT	24" RCP CL III LIN FT	22" RCP-A CL IIA LIN FT	28" RCP-A CL IIA LIN FT	REMARKS
5078		13WB	678+48.51	14.0' RT							B - 9			746.90									(3)
15078	5079	13WB	678+48.51	13.0' RT	CB		4.5					B			742.30	741.74	11						(4)
5079		13EB	678+47.35	31.7' LT							M - 11			745.53									(3)
15079	5080	13EB	678+47.35	30.9' LT	CB			4.0							741.53	733.80	372						(4)
5080		13EB	674+75.45	38.5' LT							M - 11			737.71									(3)
15080	5081	13EB	674+75.45	37.7' LT	CB			4.0							733.75	732.75	175						(4)
5081		13EB	673+00.00	38.5' LT							M - 11			736.34									(3)
15081	5082	13EB	673+00.00	37.7' LT	CB			3.6							732.73	731.95	150						(4)
5082		13EB	671+50.00	41.0' LT							M - 11			735.35									(3)
15082	5083	13EB	671+50.00	40.2' LT	CB			3.5							731.92	729.38					300		(4)
5083		13EB	668+50.00	42.2' LT							M - 11			732.90									(3)
15083	5084	13EB	668+50.00	41.4' LT	CB			3.6							729.35	726.07						346	(4)
5084		13EB	665+03.62	45.9' LT							M - 11			732.66									(3)
15084	5085	13EB	665+03.62	44.6' LT	CB					6.9					725.84	725.52				68			(4)
5085		13WB	665+04.05	30.0' LT							A - 7D			733.20									(3)
15085	6085	13WB	665+04.05	28.9' LT	MH				7.8						725.49	725.41			15				(4) (5)
5087	5088	13WB	675+26.12	14.0' RT	CB	3.1					B - 9			740.73	737.52	735.02	50						
5088		13WB	674+75.74	14.0' RT							B - 9			739.86									(3)
15088	5080	13WB	674+75.74	13.0' RT	CB		5.0					B			734.74	733.93	13						(4)
5309	5085	13WB	666+50.00	44.5' LT	CB		3.8				M - 11			730.30	726.53	726.01		147					
5317	5309	13WB	666+60.00	44.5' LT	CB		3.6				M - 11			730.40	726.79	726.60		10					
5318	5317	13WB	666+70.00	44.5' LT	CB	3.5					M - 11			730.50	727.03	726.89	10						
6085		13WB	665+04.17	45.1' LT							M - 11				725.41								(6)
TOTALS						6.6	16.9	18.7	7.8	6.9							781	157	15	68	300	346	

NOTE: STA. AND OFFSET IS AT
- CENTER OF STRUCTURE UNLESS NOTED OTHERWISE.
- END OF RC APRON, CS SAFETY APRON
- END OF BARREL, CS PIPE

FLOWLINE (F.L.) ELEVATIONS ARE AT CENTER OF STRUCTURE ON PROFILES. INLET AND OUTLET ELEVATIONS ON TABULATION ARE AT EDGE OF STRUCTURE.

ALL CONCRETE PIPE SEWER IS DESIGN 3006 GASKET JOINT PIPE.

(1) FOR CASTING ASSEMBLY KEY & SUMMARY, SEE SHEET NO. 411.
(2) INLET ELEVATION AT DOWN-STREAM STRUCTURE.
(3) CENTER OF CASTING.
(4) CENTER OF STRUCTURE.
(5) CONNECT INTO EXISTING DRAINAGE STRUCTURE.
(6) CONVERT MANHOLE TO DROP INLET. SEE MISCELLANEOUS DRAINAGE ITEMS TABULATION ON SHEET NO. 41.

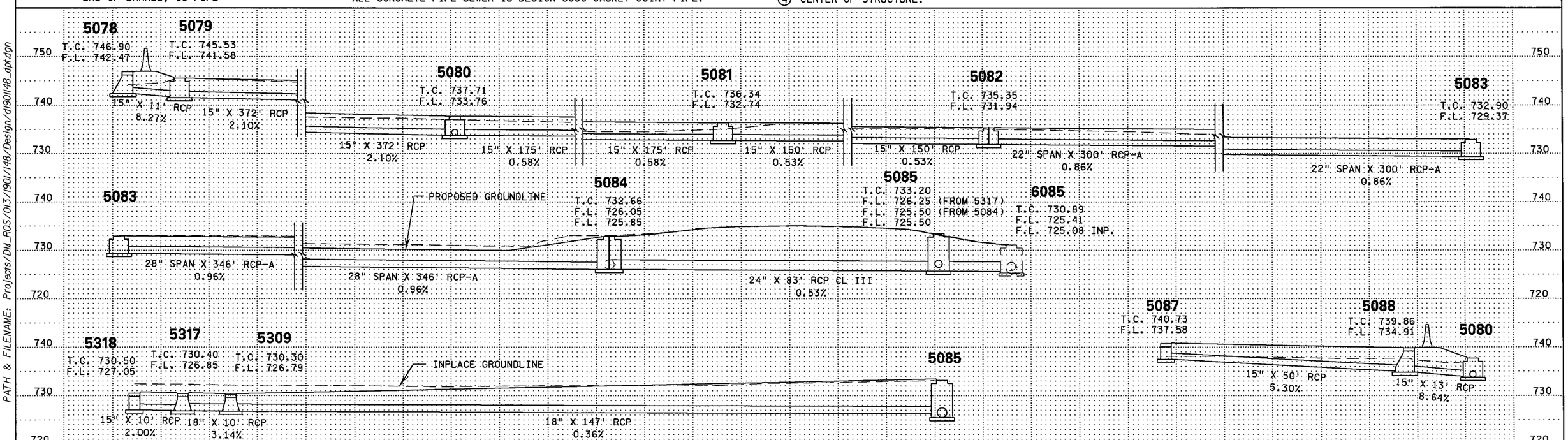

5078	5081	5084	5088	5318	
5079	5082	5085	5309	6085	
5080	5083	5087	5317		

S.P. 179-020-031 S.P. 019-605-028

14 OF 31

DRAINAGE TABULATIONS AND PROFILES

DRAWN BY: CT | CHECKED BY: HS | CERTIFIED BY Scott Carlstrom LICENSED PROFESSIONAL ENGINEER | LIC. NO. 23344 DATE 6/18/12

STATE PROJ. NO. 1901-148 (T.H. 13) SHEET NO. 390 OF 442 SHEETS

PLOTTED/REVISED: 13-JUN-2012 07:52
DISTRICT #: METRO
IPLOT NAME: d190148_dpt4
PATH & FILENAME: Projects/DM_ROS/013/190l/148/Design/d190l148_dpt.dgn

DRAINAGE TABULATION (THIS SHEET ONLY)

STRUCTURE NO. FLOWS FROM	STRUCTURE NO. FLOWS TO	STRUCTURE LOCATION ALIGN.	STATION	OFFSET	TYPE	DRAINAGE STRUCTURES PAY HEIGHT F LIN FT	54-4020 LIN FT	60-4020 LIN FT	66-4020 LIN FT	DES SPEC (5) LIN FT	DES SPEC 1 (6) LIN FT	CASTING ASSEMBLY TYPE (1)	CONE TYPE	STEPS REQ'D	TOP OF CASTING OR COVER ELEV	OUTLET ELEV.	INLET ELEV. (2)	12" RCP CL II LIN FT	15" RCP CL II LIN FT	18" RCP CL II LIN FT	27" RCP CL III LIN FT	27" RCP CL V LIN FT	33" RCP CL V LIN FT	48" STEEL CASING PIPE LIN FT	REMARKS
5118		SEFRONT	43+07.59	0.1' LT								R - 1642			791.56										(3)
15118		SEFRONT	43+07.59	1.1' LT	MH	12.2							B	YES	778.87										(4)
25118	5119	SEFRONT	43+07.59	2.4' LT	MH				9.6					YES		769.75	769.33						14		(4)
5119		SEFRONT	43+10.05	14.3' LT								R - 3067V			791.27										(3)
15119	5120	SEFRONT	43+10.05	13.2' LT	CB		22.9									768.65	763.30						186	80	(4)
5123	5124	SEFRONT	37+86.46	14.3' LT	CB					3.1		R - 3067V			787.72	784.75	784.49	28							
5124	5125	SEFRONT	37+86.46	14.3' RT	CB					3.3		R - 3067V			787.72	784.47	783.94	55							
5125	5126	SEFRONT	38+51.48	14.4' RT	CB					3.5		R - 3067V			787.36	783.92	783.57	65							
5126	5127	SEFRONT	39+20.82	14.3' RT	CB					3.8		R - 3067V			787.23	783.55	783.49	17							
5127		SEFRONT	39+37.95	14.3' RT								R - 3067V			787.23										(3)
15127	5128	SEFRONT	39+37.95	14.6' RT	CB						4.2					783.19	782.61		121						(4)
5128		SEFRONT	40+58.96	14.3' RT								R - 3067V			787.74										(3)
15128	5129	SEFRONT	40+58.96	14.6' RT	CB						5.5					782.34	781.70			132					(4)
5129		SEFRONT	41+91.10	14.3' RT								R - 3067V			789.22										(3)
15129	5130	SEFRONT	41+91.10	14.3' RT	CB		8.7									780.83	780.37				14				(4) (8)
5130		SEFRONT	41+92.28	0.1' RT								R - 1642			789.57										(3)
15130	5118	SEFRONT	41+92.28	0.1' RT	MH			9.6								780.12	774.62					115			(4)
TOTALS						12.2	31.6	9.6	9.6	13.7	9.7							165	121	132	14	115	200	80	

NOTE: STA. AND OFFSET IS AT
- CENTER OF STRUCTURE UNLESS NOTED OTHERWISE.
- END OF RC APRON, CS SAFETY APRON
- END OF BARREL, CS PIPE

FLOWLINE (F.L.) ELEVATIONS ARE AT CENTER OF STRUCTURE ON PROFILES.
INLET AND OUTLET ELEVATIONS ON TABULATION ARE AT EDGE OF STRUCTURE.

ALL CONCRETE PIPE SEWER IS DESIGN 3006 GASKET JOINT PIPE.

(1) FOR CASTING ASSEMBLY KEY & SUMMARY, SEE SHEET NO. 411.
(2) INLET ELEVATION AT DOWN-STREAM STRUCTURE.
(3) CENTER OF CASTING.
(4) CENTER OF STRUCTURE.
(5) FOR DETAILS, SEE SHEET NO. 420.
(6) FOR DETAILS, SEE SHEET NO. 420.
(7) TEMPORARY STRUCTURE. FOR DETAILS, SEE TABULATION ON SHEET NO. 412.
(8) CONSTRUCT OVER EXISTING STORM SEWER PIPE - INCIDENTAL.

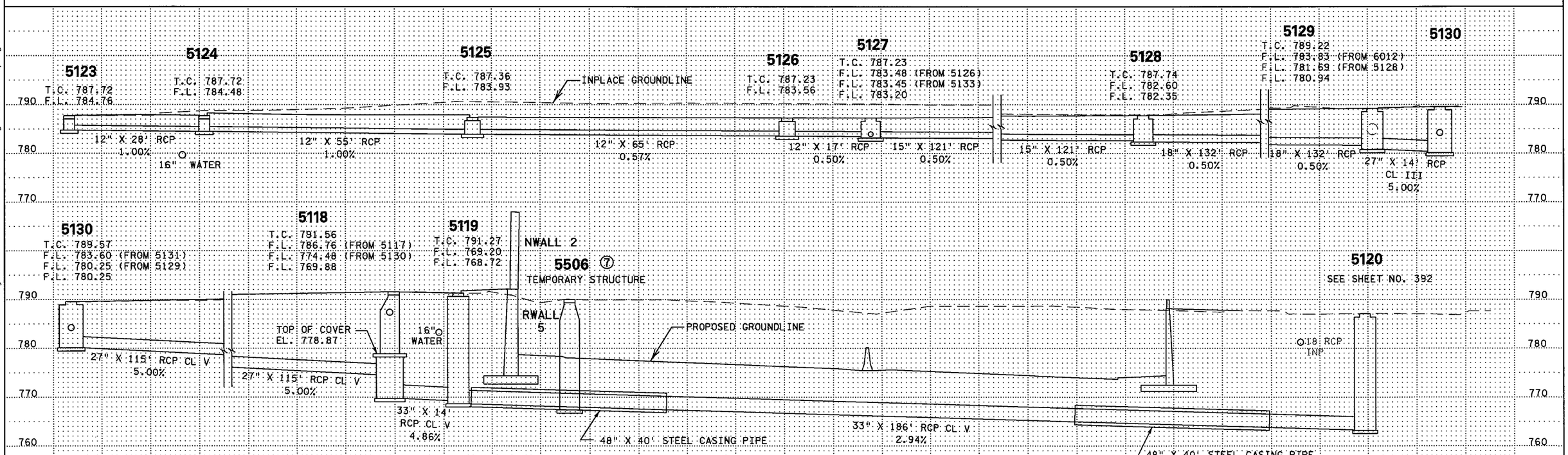

5118	5123	5126	5129
5119	5124	5127	5130
5120	5125	5128	

S.P. 179-020-031 S.P. 019-605-028

15 OF 31

DRAINAGE TABULATIONS AND PROFILES

DRAWN BY: CT | CHECKED BY: HS | CERTIFIED BY Scott Coltrain LICENSED PROFESSIONAL ENGINEER | LIC. NO. 23344 | DATE 6/18/12

STATE PROJ. NO. 1901-148 (T.H. 13) SHEET NO. 391 OF 442 SHEETS

PLOTTED/REVISED: 12-JUN-2012 15:17
DISTRICT #: METRO
IPLOT NAME: d1901148_dpl5
PATH & FILENAME: Projects/DM_ROS/013/1901/148/Design/d1901148_dpt.dgn

DRAINAGE TABULATION (THIS SHEET ONLY)

STRUCTURE NO. FLOWS FROM	STRUCTURE NO. FLOWS TO	STRUCTURE LOCATION ALIGN.	STATION	OFFSET		DRAINAGE STRUCTURES TYPE	54-4020 LIN FT	90-4020 LIN FT	DES SPEC (5) LIN FT	DES SPEC 1 (6) LIN FT	CASTING ASSEMBLY TYPE (1)	CONE TYPE	STEPS REQ'D	TOP OF CASTING ELEV	OUTLET ELEV.	INLET ELEV. (2)	12" RCP CL II LIN FT	15" RCP CL II LIN FT	33" RCP CL V LIN FT	REMARKS
5117	5118	SEFRONT	43+49.64	14.3'	RT	CB			4.5		R - 3067V			791.98	787.62	786.80		44		
5120		13WB	699+64.66	83.0'	LT						A - 7D			787.05						(3)
15120	5121	13WB	699+64.66	84.1'	LT	MH	23.9								763.22	760.77			325	(4)
5121		13WB	700+21.80	403.5'	RT						R - 1642			782.79						(3)
15121	5122	13WB	700+21.80	404.6'	RT	MH	22.4								760.73	759.51			121	(4)
5122		13WB	699+65.94	514.5'	RT						R - 1642			769.00						(3)(7)
15122		13WB	699+66.07	512.0'	RT	MH		9.8							759.51					(4)(8)
5131	5130	SEFRONT	41+93.25	14.3'	LT	CB			4.5		R - 3067V			789.25	784.88	784.10		14		
5132	5133	SEFRONT	39+20.82	14.3'	LT	CB			3.0		R - 3067V			787.22	784.31	784.04	17			
5133		SEFRONT	39+37.45	14.3'	LT						R - 3067V			787.23						(3)
15133	5127	SEFRONT	39+37.45	14.6'	LT	CB				3.4					783.97	783.49	28			(4)
5307	5308	SEFRONT	44+86.65	14.3'	LT	CB			3.3		R - 3067V			794.45	791.25	790.76		28		
5308		SEFRONT	44+86.65	14.3'	RT						R - 3067V			794.45						(3)
15308	5117	SEFRONT	44+86.65	14.6'	RT	CB				3.9					790.68	787.66		138		(4)
TOTALS							46.3	9.8	15.3	7.3							45	224	446	

NOTE: STA. AND OFFSET IS AT
- CENTER OF STRUCTURE UNLESS NOTED OTHERWISE.
- END OF RC APRON, CS SAFETY APRON
- END OF BARREL, CS PIPE

FLOWLINE (F.L.) ELEVATIONS ARE AT CENTER OF STRUCTURE ON PROFILES.
INLET AND OUTLET ELEVATIONS ON TABULATION ARE AT EDGE OF STRUCTURE.

ALL CONCRETE PIPE SEWER IS DESIGN 3006 GASKET JOINT PIPE.

(1) FOR CASTING ASSEMBLY KEY & SUMMARY, SEE SHEET NO. 411.
(2) INLET ELEVATION AT DOWN-STREAM STRUCTURE.
(3) CENTER OF CASTING.
(4) CENTER OF STRUCTURE.
(5) FOR DETAILS, SEE SHEET NO. 420.
(6) FOR DETAILS, SEE SHEET NO. 420.
(7) LOCATION OF INTERSECTION OF STORM SEWER PIPES.
(8) CONSTRUCT OVER EXISTING STORM SEWER PIPE - INCIDENTAL.

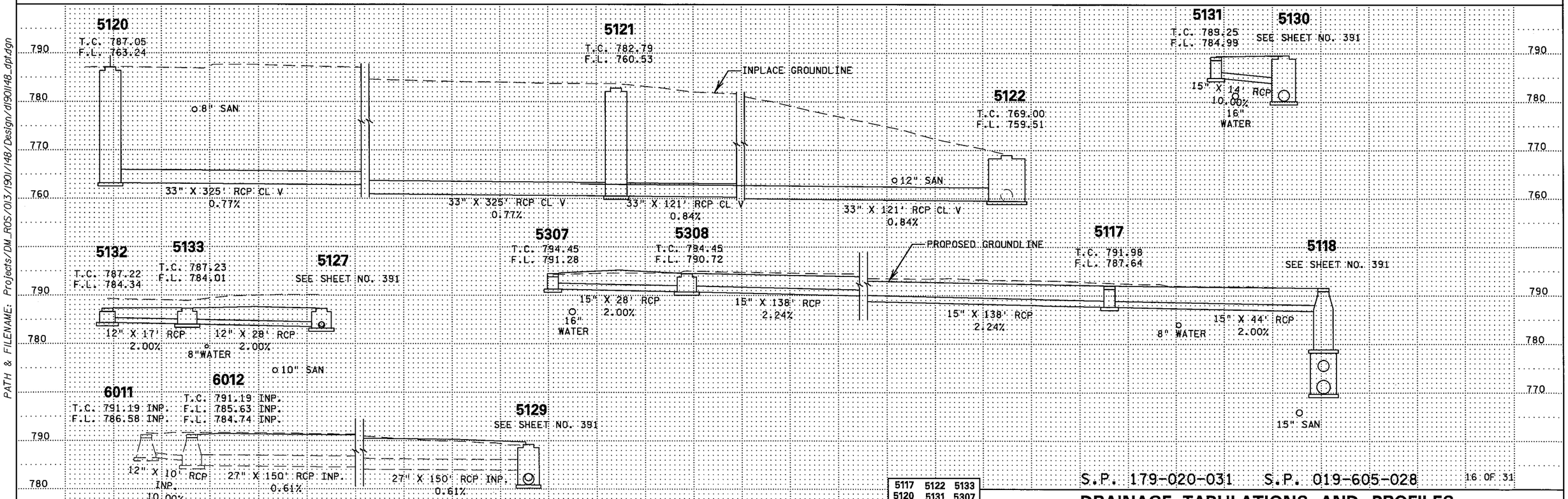

5117	5122	5133
5120	5131	5307
5121	5132	5308

S.P. 179-020-031 S.P. 019-605-028

16 OF 31

DRAINAGE TABULATIONS AND PROFILES

DRAWN BY: CT | CHECKED BY: HS | CERTIFIED BY Scott Carlstrom LICENSED PROFESSIONAL ENGINEER | LIC. NO. 23344 DATE 6/18/12

STATE PROJ. NO. 1901-148 (T.H. 13) SHEET NO. 392 OF 442 SHEETS

PLOTTED/REVISED: 13-JUN-2012 08:05
DISTRICT #: METRO
IPLOT NAME: d1901148_dpt16
PATH & FILENAME: Projects/DM_ROS/013/1901/148/Design/d1901148_dpt.dgn

DRAINAGE TABULATION (THIS SHEET ONLY)

STRUCTURE NO. FLOWS FROM	STRUCTURE NO. FLOWS TO	STRUCTURE LOCATION ALIGN.	STATION	OFFSET		DRAINAGE STRUCTURES TYPE	PAY HEIGHT H LIN FT	F LIN FT	SD-48 LIN FT	48-4020 LIN FT	60-4020 LIN FT	CASTING ASSEMBLY TYPE (1)	CONE TYPE	STEPS REQ'D	TOP OF CASTING ELEV	OUTLET ELEV.	INLET ELEV. (2)	15" RCP CL II LIN FT	15" RCP CL IV LIN FT	18" RCP CL II LIN FT	APRON EACH	APRON TYPE	GUIDE POSTS TYPE B EACH	RANDOM RIPRAP CL II (7) CU YD	GEOTEXTILE FILTER CL II SQ YD	REMARKS
5070	5071	SWRAMP	50+13.86	71.1'	RT							A - 7D			766.22											(3)
15070	5071	SWRAMP	50+13.86	72.1'	RT	MH		11.3					B			755.14	748.48		71							(4)
5071		13EB	681+35.37	49.1'	RT							D - 4			752.93											(3)
15071	5073	13EB	681+35.37	48.3'	RT	CB				4.6				YES		748.26	748.10	21								(4)
5072	5071	SWRAMP	50+00.08	7.0'	RT	CB	3.1					D - 4			753.29	750.08	748.48	19								
5073		SWRAMP	50+02.66	7.0'	LT							D - 4			753.21											(3)
15073	5074	SWRAMP	50+02.66	5.7'	LT	CB					5.1			YES		748.04	747.90	15								(4)
5074		13EB	681+53.36	23.0'	RT							B - 9			753.56											(3)
15074	5075	13EB	681+53.36	22.2'	RT	CB				5.6				YES		747.84	747.19	43								(4)
5075		13WB	681+54.04	26.8'	RT							M - 11			752.01											(3)
15075	5076	13WB	681+54.04	26.0'	RT	CB				5.2				YES		746.89	746.80			14						(4)
5076		13WB	681+53.87	14.0'	RT							B - 9			753.24											(3)
15076	5077	13WB	681+53.87	13.2'	RT	CB				6.4				YES		746.77	746.52			35						(4)
5077		13WB	681+52.66	23.0'	LT							B - 9			752.84											(3)
15077	6008	13WB	681+52.66	22.8'	LT	CB				6.3				YES		746.47	744.77			90						(4)(5)
5301	5073	SWRAMP	51+04.81	7.0'	LT	CB	3.2					D - 4			754.86	751.58	748.16	102								
5302		13EB	679+97.31	39.8'	RT							D - 4			750.50											(3)
15302	5303	13EB	679+97.31	39.0'	RT	CB			4.0							746.42	743.41	166								(4)
5303		13EB	678+31.99	28.8'	RT							D - 4			747.42											(3)
15303	5304	13EB	678+31.99	28.0'	RT	CB			4.0							743.33	741.52	95								(4)
5304		13EB	677+37.66	22.4'	RT							D - 4			745.72											(3)
15304	5305	13EB	677+37.66	21.6'	RT	CB			4.2							741.45	741.20	20								(4)
5305		13EB	677+17.21	21.2'	RT							D - 4	B		745.37											(3)
15305	5306	13EB	677+17.21	20.2'	RT	CB		6.5								738.77	738.11	30								(4)(6)
5306		13EB	677+16.21	56.0'	RT	APR										738.11					1	15" RC APRON	1	3.1	9.3	
6008		NWRAMP	78+34.45	72.4'	RT	MH																				MH INP
TOTALS							6.3	17.8	12.2	28.1	5.1							511	71	139	1		1	3.1	9.3	

NOTE: STA. AND OFFSET IS AT
- CENTER OF STRUCTURE UNLESS NOTED OTHERWISE.
- END OF RC APRON, CS SAFETY APRON
- END OF BARREL, CS PIPE

FLOWLINE (F.L.) ELEVATIONS ARE AT CENTER OF STRUCTURE ON PROFILES.
INLET AND OUTLET ELEVATIONS ON TABULATION ARE AT EDGE OF STRUCTURE.

ALL CONCRETE PIPE SEWER IS DESIGN 3006 GASKET JOINT PIPE.

(1) FOR CASTING ASSEMBLY KEY & SUMMARY, SEE SHEET NO. 411.
(2) INLET ELEVATION AT DOWN-STREAM STRUCTURE.
(3) CENTER OF CASTING.
(4) CENTER OF STRUCTURE.
(5) CONNECT INTO EXISTING DRAINAGE STRUCTURE.
(6) TIE LAST 3 JOINTS AT APRON END - INCIDENTAL.
(7) FOR DETAILS, SEE STANDARD PLATE 3133.
RIPRAP IS TO EXTEND 2 FEET UNDER THE PIPE APRON.

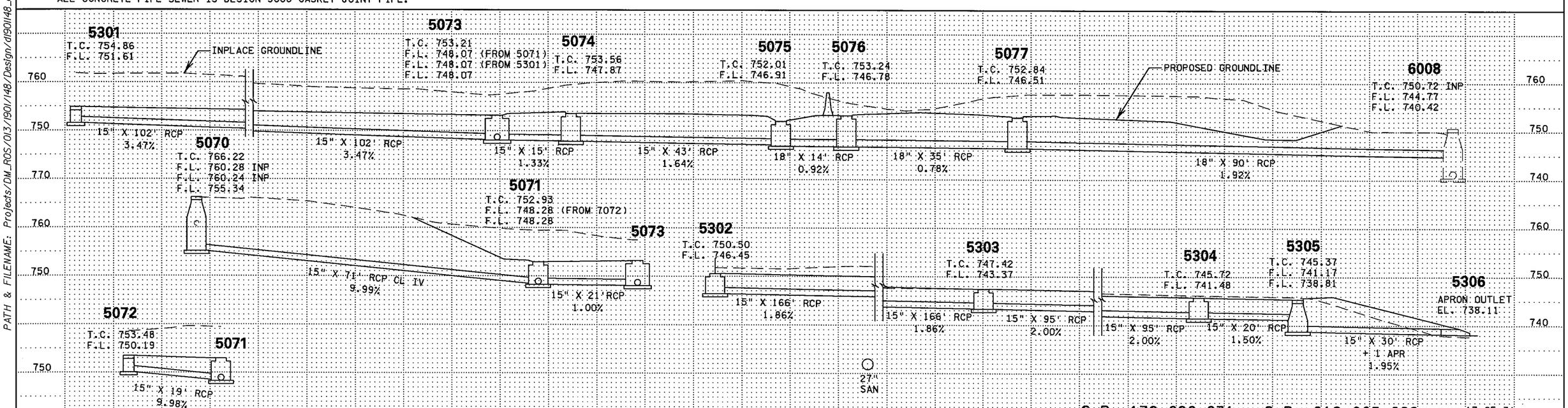

5070	5073	5076	5302	5305
5071	5074	5077	5303	5306
5072	5075	5301	5304	6008

S.P. 179-020-031 S.P. 019-605-028

17 OF 31

DRAINAGE TABULATIONS AND PROFILES

DRAWN BY: CT | CHECKED BY: HS | CERTIFIED BY Scott Carlson LICENSED PROFESSIONAL ENGINEER | LIC. NO. 23344 DATE 6/18/12

STATE PROJ. NO. 1901-148 (T.H. 13) SHEET NO. 393 OF 442 SHEETS

PLOTTED/REVISED: 13-JUN-2012 08:11
DISTRICT #: METRO
IPLOT NAME: d190ll48_dpt17
PATH & FILENAME: Projects/DM_ROS/013/1901/148/Design/d190ll48_dpt.dgn

DRAINAGE TABULATION (THIS SHEET ONLY)

STRUCTURE NO. FLOWS FROM	STRUCTURE NO. FLOWS TO	STRUCTURE LOCATION ALIGN.	STATION	OFFSET	DRAINAGE STRUCTURES TYPE	PAY HEIGHT H LIN FT	SD-48 LIN FT	48-4020 LIN FT	54-4020 LIN FT	60-4020 LIN FT	72-4020 LIN FT	84-4020 LIN FT	CASTING ASSEMBLY TYPE (1)	CONE TYPE	STEPS REQ'D	TOP OF CASTING ELEV	OUTLET ELEV.	INLET ELEV. (2)	15" RCP CL II LIN FT	24" RCP CL II LIN FT	27" RCP CL II LIN FT	REMARKS
5146	5147	NBCSAH5	106+78.06	21.0' RT	CB	3.1							B - 9			789.39	786.23	785.02	104			
5147		NBCSAH5	107+83.14	21.0' RT									B - 9			788.87						(3)
15147	5148	NBCSAH5	107+83.14	20.2' RT	CB		3.8										784.98	784.23	79			(4)
5148		NBCSAH5	108+62.70	24.9' RT									B - 9			788.39						(3)
15148	5149	NBCSAH5	108+62.70	23.6' RT	CB					4.6							783.74	783.02		70		(4)
5149		NBCSAH5	109+33.45	25.0' RT									B - 9			788.03						(3)
15149	5150	NBCSAH5	109+33.45	24.2' RT	CB			5.0									782.98	782.02		103		(4)
5150		NBCSAH5	110+36.89	25.0' RT									B - 9			787.33						(3)
15150	5151	NBCSAH5	110+36.89	24.2' RT	CB			5.3									781.98	781.52		58		(4)
5151		NBCSAH5	110+93.10	42.7' RT									B - 9			786.27						(3)
15151	5152	NBCSAH5	110+93.10	41.6' RT	CB				4.7								781.46	780.29		66		(4)
5152		SERAMP	60+46.45	8.5' LT									B - 9			785.02						(3)
15152	5153	SERAMP	60+46.45	7.4' LT	CB				5.0								779.97	779.54			36	(4)
5153		NBCSAH5	111+72.53	13.0' RT									B - 9			785.41						(3)
15153	5154	NBCSAH5	111+72.53	11.2' RT	CB						5.9						779.44	777.57			107	(4)
5154		SBCSAH5	111+93.35	36.8' LT									B - 9			784.83						(3)
15154	5402	SBCSAH5	111+91.05	36.8' LT	CB							7.3					777.45	777.00			33	(4)
5155		NBCSAH5	110+82.94	63.8' RT									A - 7D			787.41						(3)
15155	5151	NBCSAH5	110+82.94	63.0' RT	MH		5.1										782.44	781.82	23			(4)
5156	5153	NBCSAH5	111+36.38	15.0' RT	CB	3.7							B - 9			786.13	782.40	781.49	35			
5179		SBCSAH5	112+01.96	28.7' LT									B - 9			784.78						(3)
15179	5154	SBCSAH5	112+01.96	27.9' LT	CB		4.8										779.89	779.25	12			(4)(5)
6015	5148	NBCSAH5	108+00.79	122.2' RT	CB											814.83	787.71	783.86				CB INP
TOTALS						6.8	13.7	10.3	9.7	4.6	5.9	7.3							253	297	176	

NOTE: STA. AND OFFSET IS AT
- CENTER OF STRUCTURE UNLESS NOTED OTHERWISE.
- END OF RC APRON, CS SAFETY APRON
- END OF BARREL, CS PIPE

FLOWLINE (F.L.) ELEVATIONS ARE AT CENTER OF STRUCTURE ON PROFILES.
INLET AND OUTLET ELEVATIONS ON TABULATION ARE AT EDGE OF STRUCTURE.

ALL CONCRETE PIPE SEWER IS DESIGN 3006 GASKET JOINT PIPE.

(1) FOR CASTING ASSEMBLY KEY & SUMMARY, SEE SHEET NO. 411.
(2) INLET ELEVATION AT DOWN-STREAM STRUCTURE.
(3) CENTER OF CASTING.
(4) CENTER OF STRUCTURE.
(5) CONSTRUCT OVER EXISTING STORM SEWER PIPE - INCIDENTAL.
(6) PLACE SAND BETWEEN 27" PIPE AND 4020 COVER TO PROVIDE SUPPORT FOR 27" PIPE - INCIDENTAL.

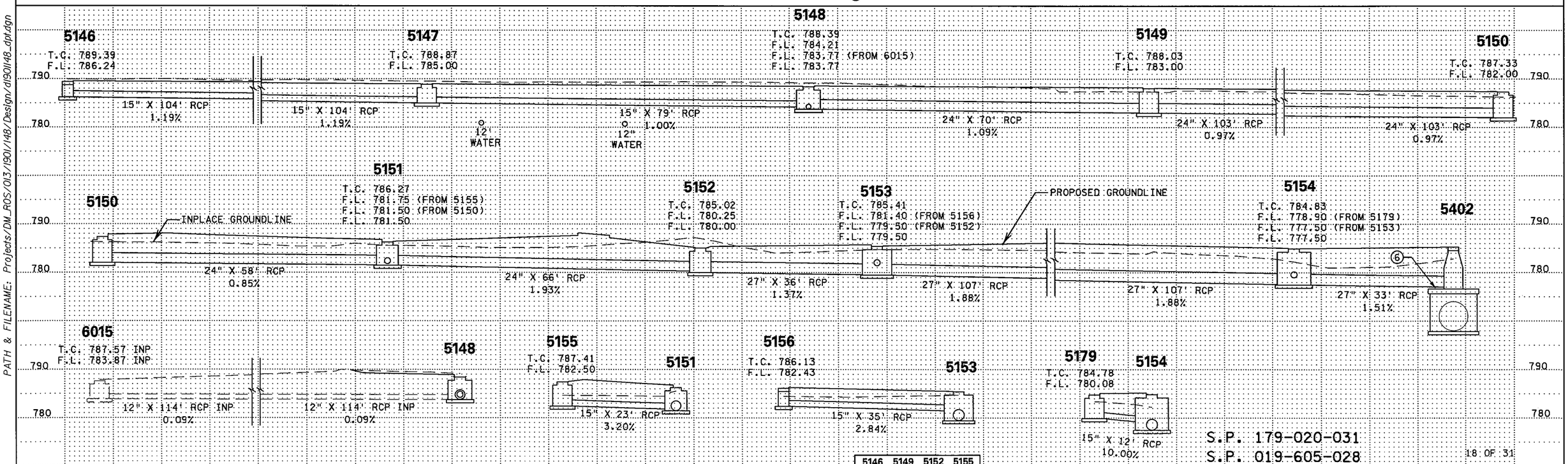

5146	5149	5152	5155
5147	5150	5153	5156
5148	5151	5154	5179

S.P. 179-020-031
S.P. 019-605-028

18 OF 31

DRAINAGE TABULATIONS AND PROFILES

DRAWN BY: CT | CHECKED BY: HS | CERTIFIED BY Scott Corbett LICENSED PROFESSIONAL ENGINEER | LIC. NO. 23344 DATE 6/18/12

STATE PROJ. NO. 1901-148 (T.H. 13) SHEET NO. 394 OF 442 SHEETS

PLOTTED/REVISED: 12-JUN-2012 15:17
DISTRICT #: METRO
IPLOT NAME: dl901l48_dpt18
PATH & FILENAME: Projects/DM_ROS/013/1901/148/Design/dl901l48_dpt.dgn

DRAINAGE TABULATION (THIS SHEET ONLY)

STRUCTURE NO. FLOWS FROM	STRUCTURE NO. FLOWS TO	STRUCTURE LOCATION ALIGN.	STATION	OFFSET	DRAINAGE STRUCTURES TYPE	PAY HEIGHT H LIN FT	PAY HEIGHT SD-48 LIN FT	PAY HEIGHT 48-4020 LIN FT	PAY HEIGHT 66-4020 LIN FT	CASTING ASSEMBLY TYPE (1)	CONE TYPE	STEPS REQ'D	TOP OF CASTING ELEV	OUTLET ELEV.	INLET ELEV. (2)	15" RCP CL II LIN FT	24" RCP CL II LIN FT	REMARKS
5158		SBCSAH5	104+00.97	19.7' LT						B - 9			791.09					(3)
15158	5159	SBCSAH5	104+00.97	18.9' LT	CB			8.8						782.20	781.84		70	(4)(5)
5159		SBCSAH5	104+70.11	13.6' LT						B - 9			790.63					(3)
15159	5160	SBCSAH5	104+70.11	12.8' LT	CB			8.7						781.82	781.75		17	(4)
5160		SBCSAH5	104+85.97	18.8' LT						B - 9			790.41					(3)
15160	5161	SBCSAH5	104+85.97	18.0' LT	CB			8.6						781.73	781.56		38	(4)
5161		SBCSAH5	105+23.38	20.2' LT						A - 7D			790.32					(3)
15161	6162	SBCSAH5	105+23.38	19.4' LT	MH			8.9						781.52	780.83			(4)(5)
5168	5169	SBCSAH5	107+37.84	25.0' LT	CB	3.1				B - 9			789.02	785.84	785.47	20		
5169		SBCSAH5	107+36.72	6.2' LT						A - 7D			789.54					(3)
15169	5170	SBCSAH5	107+36.72	5.4' LT	MH		4.5							785.20	784.04	56		(4)
5170		SBCSAH5	107+92.35	5.4' LT						A - 7D			789.28					(3)
15170	5171	SBCSAH5	107+92.35	4.6' LT	MH			5.4						783.96	781.54	125		(4)
5171		SBCSAH5	109+17.09	5.9' LT						A - 7D			788.64					(3)
15171	6163	SBCSAH5	109+17.09	5.1' LT	MH			7.9						780.90	780.47		11	(4)(6)
5172	5170	SBCSAH5	107+93.32	25.0' LT	CB	3.1				B - 9			788.74	785.57	785.28	20		
5173	5174	SBCSAH5	109+47.78	45.6' LT	CB	3.6				M - 11			787.57	783.97	783.85	9		
5174		SBCSAH5	109+45.46	37.0' LT						B - 9			787.74					(3)
15174	6163	SBCSAH5	109+45.46	35.4' LT	CB				5.0					782.65	781.99			(4)
6014	5158	SBCSAH5	102+01.23	23.5' LT	MH								795.20	783.20	782.22			
6162	6163	NBCSAH5	105+65.56	64.7' LT	MH								790.63	772.82	769.94			(7)
6163	5400	SBCSAH5	109+23.36	14.7' LT	MH								788.44	769.93	768.89			
TOTALS						9.8	4.5	48.3	5.0							230	136	

NOTE: STA. AND OFFSET IS AT
- CENTER OF STRUCTURE UNLESS NOTED OTHERWISE.
- END OF RC APRON, CS SAFETY APRON
- END OF BARREL, CS PIPE

FLOWLINE (F.L.) ELEVATIONS ARE AT CENTER OF STRUCTURE ON PROFILES.
INLET AND OUTLET ELEVATIONS ON TABULATION ARE AT EDGE OF STRUCTURE.

ALL CONCRETE PIPE SEWER IS DESIGN 3006 GASKET JOINT PIPE.

(1) FOR CASTING ASSEMBLY KEY & SUMMARY, SEE SHEET NO. 411.
(2) INLET ELEVATION AT DOWN-STREAM STRUCTURE.
(3) CENTER OF CASTING.
(4) CENTER OF STRUCTURE.
(5) CONSTRUCT OVER EXISTING STORM SEWER PIPE - INCIDENTAL.
(6) CONNECT INTO EXISTING DRAINAGE STRUCTURE.
(7) SEE MISCELLANEOUS DRAINAGE ITEMS TABULATION ON SHEET NO. 45.

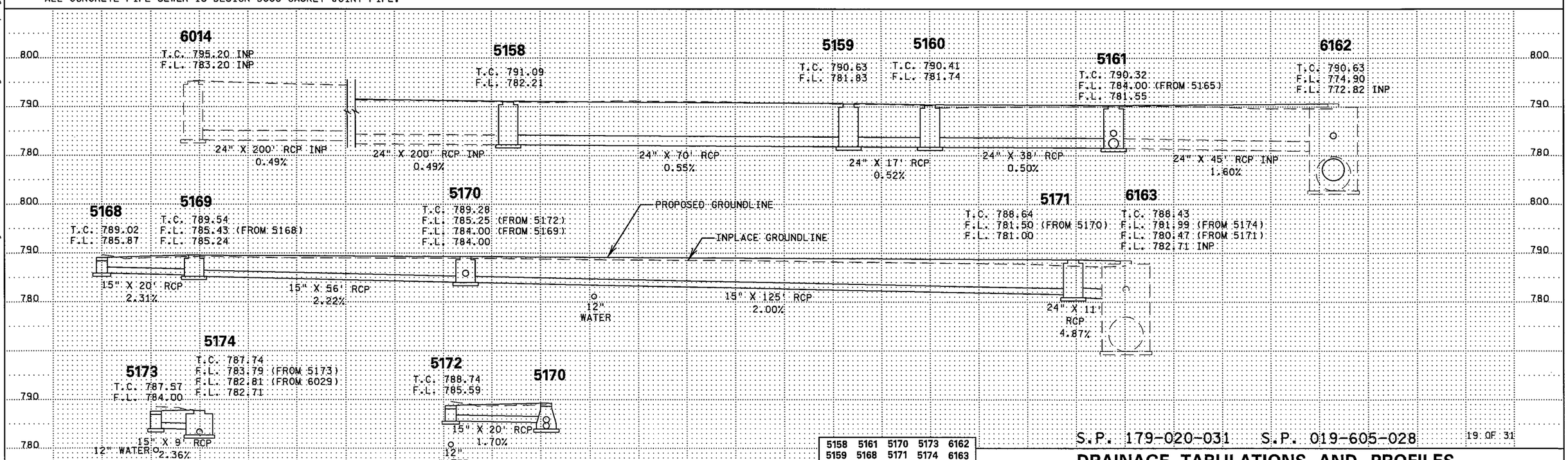

5158	5161	5170	5173	6162
5159	5168	5171	5174	6163
5160	5169	5172	6014	

S.P. 179-020-031 S.P. 019-605-028

19 OF 31

DRAINAGE TABULATIONS AND PROFILES

DRAWN BY: CT | CHECKED BY: HS | CERTIFIED BY Scott Carlson LICENSED PROFESSIONAL ENGINEER | LIC. NO. 23344 DATE 6/18/12

STATE PROJ. NO. 1901-148 (T.H. 13) SHEET NO. 395 OF 442 SHEETS

PLOTTED/REVISED: 12-JUN-2012 15:18
DISTRICT #: METRO
PLOT NAME: d190l148_dpt19
PATH & FILENAME: Projects/DM_ROS/013/190l/148/Design/d190l148_dpt.dgn

DRAINAGE TABULATION (THIS SHEET ONLY)

STRUCTURE NO. FLOWS FROM	STRUCTURE NO. FLOWS TO	STRUCTURE LOCATION ALIGN.	STATION	OFFSET	DRAINAGE STRUCTURES TYPE	PAY HEIGHT H LIN FT	SD-48 LIN FT	84-4020 LIN FT	90-4020 LIN FT	120-4020 LIN FT	DES SPEC (9) LIN FT	CASTING ASSEMBLY TYPE (1)	CONE TYPE	STEPS REQ'D	TOP OF CASTING ELEV	OUTLET ELEV.	INLET ELEV. (2)	12" RCP CL II LIN FT	15" RCP CL II LIN FT	12" CP PIPE LIN FT	REMARKS
5134	5135	SEFRONT	33+43.20	16.8' RT	CB						3.6	R - 3067V			791.64	788.20	787.51		33		
5135	5136	SEFRONT	33+15.07	17.3' RT	CB						4.1	R - 3067V			791.43	787.45	786.15		34		
5136		SEFRONT	32+86.26	17.7' RT								R - 1642			791.21						(3)(7)
15136	5137	SEFRONT	32+89.61	17.5' RT	MH					7.6						783.96	781.05				(4)(5)
5137		SEFRONT	30+87.44	26.0' RT								R - 3067V			789.22						(3)
15137	5138	SEFRONT	30+87.44	23.7' RT	CB			9.1								780.07	779.73				(4)(5)
5138		SEFRONT	30+35.79	27.4' RT								R - 1642			789.42						(3)
15138	6162	SEFRONT	30+35.79	24.8' RT	MH				10.2							779.33	774.90				(4)(5)
5139	5135	SEFRONT	33+13.98	14.3' LT	CB						3.6	R - 3067V			791.42	787.98	787.51		31		
5140	5137	SEFRONT	30+87.43	14.3' LT	CB						3.6	R - 3067V			789.42	785.96	785.33		40		
5181	5182	SBCSAH5	108+29.80	38.9' LT	CB	2.9						B - 9			788.68	785.73	784.57	29			
5182		SBCSAH5	108+58.98	40.2' LT								B - 9			788.11						(3)
15182	6029	SBCSAH5	108+59.71	39.9' LT	CB		3.6									784.45	783.65	57			(4)(6)
6013	5140	SEFRONT	30+62.77	30.6' LT	CB										789.58	786.43	785.98			30	DI INP
6029	5174	SBCSAH5	109+15.79	40.5' LT	CB										787.85	783.65	782.89				MH INP (8)
TOTALS						2.9	3.6	9.1	10.2	7.6	14.9							86	138	30	

NOTE: STA. AND OFFSET IS AT
- CENTER OF STRUCTURE UNLESS NOTED OTHERWISE.
- END OF RC APRON, CS SAFETY APRON
- END OF BARREL, CS PIPE

FLOWLINE (F.L.) ELEVATIONS ARE AT CENTER OF STRUCTURE ON PROFILES.
INLET AND OUTLET ELEVATIONS ON TABULATION ARE AT EDGE OF STRUCTURE.

ALL CONCRETE PIPE SEWER IS DESIGN 3006 GASKET JOINT PIPE.

(1) FOR CASTING ASSEMBLY KEY & SUMMARY, SEE SHEET NO. 411.
(2) INLET ELEVATION AT DOWN-STREAM STRUCTURE.
(3) CENTER OF CASTING.
(4) CENTER OF STRUCTURE.
(5) CONSTRUCT OVER EXISTING STORM SEWER PIPE - INCIDENTAL.
(6) CONNECT INTO EXISTING DRAINAGE STRUCTURE.
(7) LOCATION OF INTERSECTION OF PIPES.
(8) ADJUST FRAME & RING CASTING. SEE MISCELLANEOUS DRAINAGE TABULATION ON SHEET NO. 45.
(9) FOR DETAILS, SEE SHEET NO. 420.

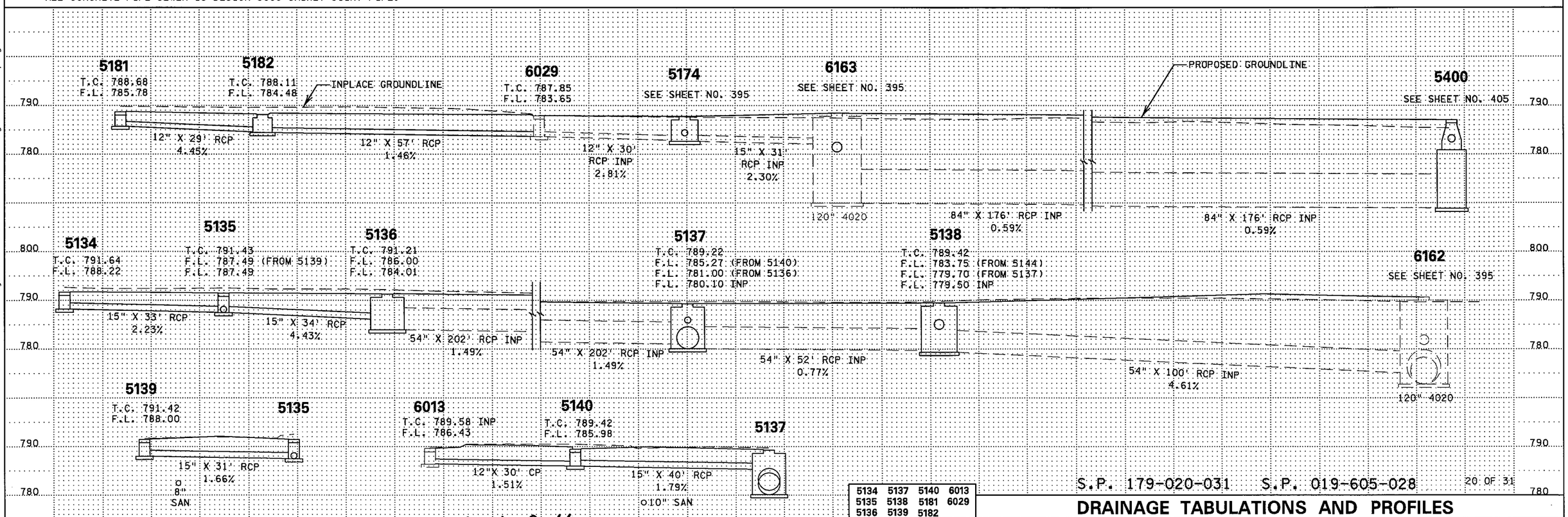

5134	5137	5140	6013
5135	5138	5181	6029
5136	5139	5182	

S.P. 179-020-031 S.P. 019-605-028

20 OF 31

DRAINAGE TABULATIONS AND PROFILES

DRAWN BY: CT | CHECKED BY: HS | CERTIFIED BY Scott Carter LICENSED PROFESSIONAL ENGINEER | LIC. NO. 23344 DATE 6/18/12

STATE PROJ. NO. 1901-148 (T.H. 13) SHEET NO. 396 OF 442 SHEETS

PLOTTED/REVISED: 12-JUN-2012 15:18
DISTRICT : METRO
IPLOT NAME: d190148_dpt20
PATH & FILENAME: Projects/DM_ROS/013/1901/148/Design/d190148_dpt.dgn

DRAINAGE TABULATION (THIS SHEET ONLY)

STRUCTURE NO. FLOWS FROM	STRUCTURE NO. FLOWS TO	STRUCTURE LOCATION ALIGN.	STATION	OFFSET	TYPE	DRAINAGE STRUCTURES PAY HEIGHT H LIN FT	G LIN FT	SD-48 LIN FT	48-4020 LIN FT	54-4020 LIN FT	DES SPEC (6) LIN FT	CASTING ASSEMBLY TYPE (1)	CONE TYPE	STEPS REQ'D	TOP OF CASTING ELEV	OUTLET ELEV.	INLET ELEV. (2)	15" RCP CL II LIN FT	18" RCP CL II LIN FT	24" RCP CL II LIN FT	REMARKS
5141	5142	NBCSAH5	103+51.58	25.0' RT	CB	3.3						B - 9			791.38	787.99	787.35	64			
5142		NBCSAH5	104+15.56	25.0' RT								B - 9			790.78						(3)
15142	5143	NBCSAH5	104+15.56	24.2' RT	CB			3.4								787.31	786.73	61			(4)
5143		NBCSAH5	104+76.78	25.0' RT								B - 9			790.34						(3)
15143	5144	NBCSAH5	104+76.78	23.9' RT	CB					5.7						784.59	784.16			36	(4)(5)
5144		SEFRONT	30+40.20	58.5' RT								B - 9			788.85						(3)
15144	5138	SEFRONT	30+40.20	57.7' RT	CB			4.2								784.59	784.18			32	(4)
5145		NBCSAH5	104+75.93	33.9' RT								A - 7D			790.90						(3)
15145	5143	NBCSAH5	104+75.93	32.9' RT	MH		5.4						B			785.58	785.19		9		(4)(5)
5205	5206	SBCSAH5	113+88.04	27.0' LT	CB	3.1						B - 9			779.02	775.85	775.03	52			
5206		SBCSAH5	113+83.37	25.0' RT								B - 9			779.71						(3)
15206	5207	SBCSAH5	113+83.37	25.0' RT	CB			4.7								774.93	770.07	152			(4)
5207		SBCSAH5	115+35.45	25.0' RT								B - 9			773.33						(3)
15207	5208	SBCSAH5	115+35.45	24.2' RT	CB			4.6								768.67	765.89	106			(4)
5208		SBCSAH5	116+41.35	14.5' RT								B - 9			769.79						(3)
15208	5209	SBCSAH5	116+41.35	13.7' RT	CB			3.9								765.81	765.32	33			(4)
5209		SBCSAH5	116+40.70	19.0' LT								B - 9			769.36						(3)
15209	5210	SBCSAH5	116+40.70	18.2' LT	CB			4.1								765.23	763.89	53			(4)
5210	5211	SBCSAH5	116+93.53	19.0' LT								B - 9			767.78						(3)
15210	5211	SBCSAH5	116+93.53	18.2' LT	CB			3.9								763.77	762.78	38			(4)
5211		SBCSAH5	117+31.39	22.0' LT								B - 9			766.67						(3)
15211	5212	SBCSAH5	117+30.59	22.0' LT	CB			3.9								762.65	762.58	6			(4)
5212		SBCSAH5	117+37.46	21.7' LT								A - 7D			766.54						(3)
15212	5213	SBCSAH5	117+38.26	21.7' LT	MH				4.2							762.44	758.20	117			(4)
5213	5196	SBCSAH5	118+54.50	25.5' LT	CB						4.2	R - 3067V			762.06	757.95	756.05	96			
TOTALS						6.4	5.4	32.7	4.2	5.7	4.2							778	9	68	

NOTE: STA. AND OFFSET IS AT
- CENTER OF STRUCTURE UNLESS NOTED OTHERWISE.
- END OF RC APRON, CS SAFETY APRON
- END OF BARREL, CS PIPE

FLOWLINE (F.L.) ELEVATIONS ARE AT CENTER OF STRUCTURE ON PROFILES.
INLET AND OUTLET ELEVATIONS ON TABULATION ARE AT EDGE OF STRUCTURE.
ALL CONCRETE PIPE SEWER IS DESIGN 3006 GASKET JOINT PIPE.

(1) FOR CASTING ASSEMBLY KEY & SUMMARY, SEE SHEET NO. 411.
(2) INLET ELEVATION AT DOWN-STREAM STRUCTURE.
(3) CENTER OF CASTING.
(4) CENTER OF STRUCTURE.
(5) CONSTRUCT OVER EXISTING STORM SEWER PIPE - INCIDENTAL.
(6) FOR DETAILS, SEE SHEET NO. 420.

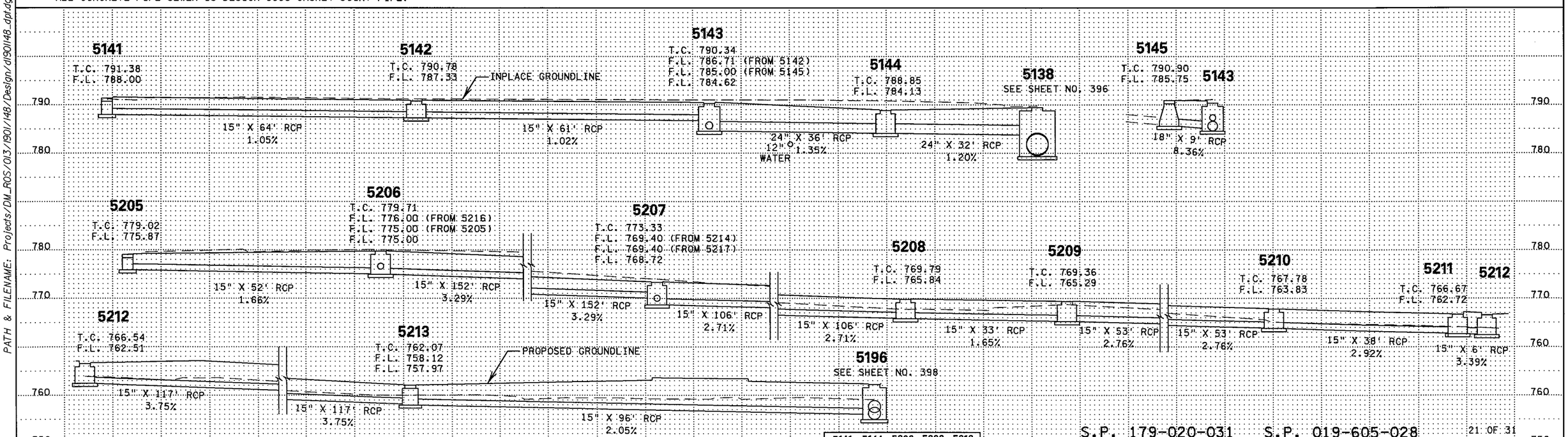

5141	5144	5206	5209	5212
5142	5145	5207	5210	5213
5143	5205	5208	5211	

S.P. 179-020-031 S.P. 019-605-028

21 OF 31

DRAINAGE TABULATIONS AND PROFILES

DRAWN BY: CT | CHECKED BY: HS | CERTIFIED BY Scott Carlstrom LICENSED PROFESSIONAL ENGINEER | LIC. NO. 23344 DATE 6/18/12

STATE PROJ. NO. 1901-148 (T.H. 13) SHEET NO. 397 OF 442 SHEETS

PLOTTED/REVISED: 12-JUN-2012 15:18
DISTRICT #: METRO
IPLOT NAME: dl901148_dpl21
PATH & FILENAME: Projects/DM_ROS/013/1901/148/Design/dl901148_dpt.dgn

DRAINAGE TABULATION (THIS SHEET ONLY)

STRUCTURE NO. FLOWS FROM	STRUCTURE NO. FLOWS TO	STRUCTURE LOCATION ALIGN.	STATION	OFFSET	TYPE	PAY HEIGHT 54-4020 LIN FT	60-4020 LIN FT	66-4020 LIN FT	84-4020 LIN FT	102-4020 LIN FT	DES SPEC 1 (5) LIN FT	CASTING ASSEMBLY TYPE (1)	CONE TYPE	STEPS REQ'D	TOP OF CASTING ELEV	OUTLET ELEV.	INLET ELEV. (2)	21" RCP CL II LIN FT	24" RCP CL II LIN FT	30" RCP CL II LIN FT	33" RCP CL II LIN FT	51" RCP-A CL IIA LIN FT	REMARKS
5183		13WB	693+01.79	69.6' LT								M - 11			784.18								(3)
15183	5186	13WB	693+01.79	69.3' LT	CB						7.1			YES		777.09	766.15	310					(4) (6)
5186		FRONTCON	12+79.65	0.1' RT								R - 1642			772.75								(3)
15186	5190	FRONTCON	12+79.65	3.3' RT	MH					6.9						765.88	762.44	131					(4)
5190		FRONTCON	11+64.65	36.0' LT								R - 3067V			766.80								(3)
15190	5192	FRONTCON	11+64.65	35.0' LT	CB			4.7								762.20	760.66	76					(4)
5192		FRONTCON	11+00.24	37.5' LT	CB							R - 3067V			766.03								(3)
15192	5193	FRONTCON	11+00.24	37.8' LT	CB						4.7					760.46	760.09		18				(4)
5193		FRONTCON	10+82.65	37.5' LT								R - 3067V			766.00								(3)
15193	5194	FRONTCON	10+82.65	36.8' LT	CB		6.8									759.47	758.83			34			(4)
5194		FRONTCON	10+48.88	42.9' LT								R - 3067V			766.12								(3)
15194	5195	FRONTCON	10+48.88	42.3' LT	CB	7.3										758.74	757.62			65			(4)
5195		NBCSAH5	118+14.67	13.5' RT								R - 3067V			763.65								(3)
15195	5196	NBCSAH5	118+14.67	13.0' RT	CB	6.1										757.50	756.48			33			(4)
5196		NBCSAH5	118+47.91	13.5' RT								R - 3067V			762.22								(3)
15196	5197	NBCSAH5	118+47.91	12.8' RT	CB		7.2									754.91	748.62			189			(4)
5197		NBCSAH5	120+36.96	13.5' RT								R - 3067V			753.71								(3)
15197	5198	NBCSAH5	120+36.96	12.5' RT	CB			14.8								738.88	737.62				167		(4)
5198		NBCSAH5	122+03.63	13.5' RT								R - 3067V			746.25								(3)
15198	5199	NBCSAH5	122+03.63	12.8' RT	CB		8.6									737.56	736.33				80		(4)
5199		NBCSAH5	122+83.08	17.6' RT								R - 3067V			743.30								(3)
15199	5201	NBCSAH5	122+83.08	17.6' RT	CB				7.2							736.08	735.54					61	(4)
TOTALS						13.4	22.6	19.5	7.2	6.9	11.8							517	18	321	247	61	

NOTE: STA. AND OFFSET IS AT
- CENTER OF STRUCTURE UNLESS NOTED OTHERWISE.
- END OF RC APRON, CS SAFETY APRON
- END OF BARREL, CS PIPE

FLOWLINE (F.L.) ELEVATIONS ARE AT CENTER OF STRUCTURE ON PROFILES.
INLET AND OUTLET ELEVATIONS ON TABULATION ARE AT EDGE OF STRUCTURE.

ALL CONCRETE PIPE SEWER IS DESIGN 3006 GASKET JOINT PIPE.

(1) FOR CASTING ASSEMBLY KEY & SUMMARY, SEE SHEET NO. 411.
(2) INLET ELEVATION AT DOWN-STREAM STRUCTURE.
(3) CENTER OF CASTING.
(4) CENTER OF STRUCTURE.
(5) FOR DETAILS, SEE SHEET NO. 420.
(6) CONSTRUCT OVER EXISTING STORM SEWER PIPE - INCIDENTAL.

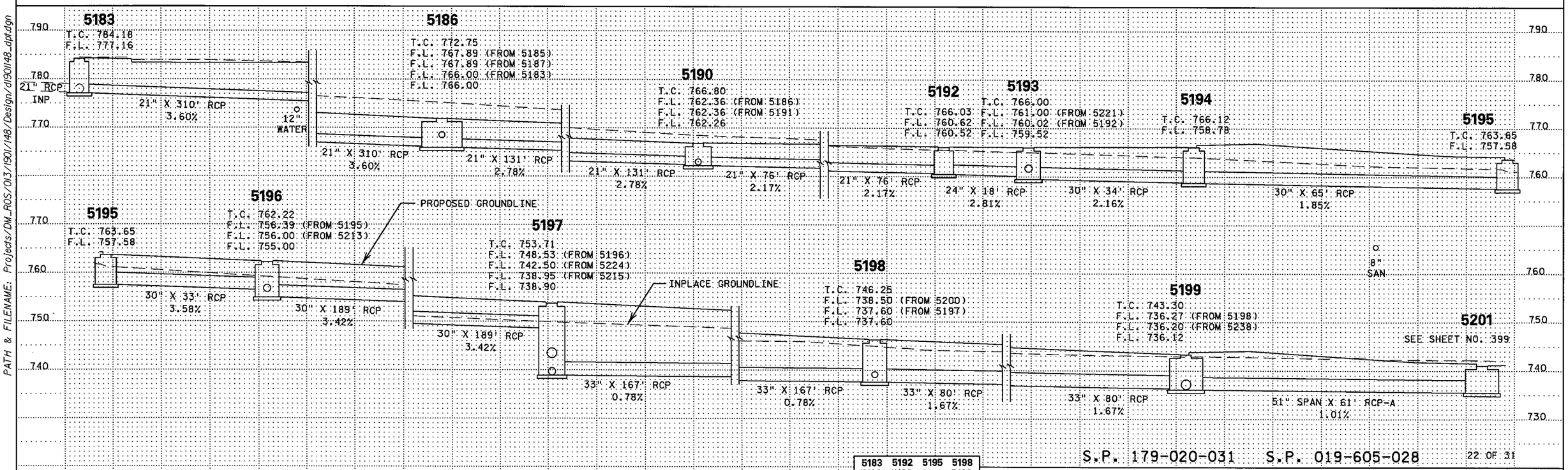

5183	5192	5195	5198
5186	5193	5196	5199
5190	5194	5197	

S.P. 179-020-031 S.P. 019-605-028

22 OF 31

DRAINAGE TABULATIONS AND PROFILES

DRAWN BY: CT | CHECKED BY: HS | CERTIFIED BY Scott Cook LICENSED PROFESSIONAL ENGINEER | LIC. NO. 23344 DATE 6/18/12

STATE PROJ. NO. 1901-148 (T.H. 13) SHEET NO. 398 OF 442 SHEETS

PLOTTED/REVISED: 13-JUN-2012 10:08
DISTRICT #: METRO
IPLOT NAME: d190l148_dpt22
PATH & FILENAME: Projects/DM_ROS/013/190l/148/Design/d190l148_dpt.dgn

DRAINAGE TABULATION (THIS SHEET ONLY)

STRUCTURE NO. FLOWS FROM	STRUCTURE NO. FLOWS TO	STRUCTURE LOCATION ALIGN.	STATION	OFFSET	DRAINAGE STRUCTURES TYPE	PAY HEIGHT H LIN FT	G LIN FT	SD-48 LIN FT	48-4020 LIN FT	84-4020 LIN FT	96-4020 LIN FT	DES SPEC (7) LIN FT	CASTING ASSEMBLY TYPE (1)	CONE TYPE	STEPS REQ'D	TOP OF CASTING ELEV	OUTLET ELEV.	INLET ELEV. (2)	15" RCP CL II LIN FT	18" RCP CL II LIN FT	60" RCP CL 11 LIN FT	66" RCP CL 11 LIN FT	78" RCP CL 11 LIN FT	51" RCP-A CL IIA LIN FT	REMARKS
5185	5186	FRONTCON1	12+93.89	21.0' RT	CB							4.1	R - 3067V			773.32	769.30	768.13	27						
5187	5186	FRONTCON	13+00.68	14.5' LT	CB							4.1	R - 3067V			773.58	769.58	768.17	26						
5191		FRONTCON1	11+95.17	62.9' LT									R - 1642	B		766.50									(3)
15191	5190	FRONTCON1	11+95.17	61.9' LT	MH		4.0										762.90	762.39	50						(4)
5201		126CON	23+36.42	20.0' RT									R - 3067V			741.06									(3)
15201	5202	126CON	23+36.42	18.3' RT	CB					5.7							735.46	735.04						47	(4)
5202		126CON	23+37.37	25.0' LT									R - 3067V			740.95									(3)
15202	5203	126CON	23+37.37	25.0' LT	CB						8.2						733.06	733.03			8				(4)
5203	5204	126CON	23+39.64	35.6' LT	INC																	4			(5)
5204	5314	126CON	23+40.79	39.4' LT	INC																		4		(5)
5218		NBCSAH5	116+50.49	27.2' RT									B - 9			768.50									(3)
15218	5219	NBCSAH5	116+50.49	26.4' RT	CB			3.5									764.91	764.45	9						(4)
5219		NBCSAH5	116+58.43	30.6' RT									B - 9			768.20									(3)
15219	5220	NBCSAH5	116+58.43	29.8' RT	CB			3.9									764.19	763.13	39						(4)
5220		FRONTCON1	10+61.72	27.8' RT									B - 9			766.23									(3)
15220	5221	FRONTCON1	10+61.72	27.0' RT	CB			3.2									763.00	762.35	22						(4)
5221		FRONTCON1	10+82.44	22.0' RT									B - 9			766.24									(3)
15221	5193	FRONTCON1	10+82.44	21.2' RT	CB				4.2								761.92	761.04		67					(4)
5222		FRONTCON1	10+86.02	34.8' RT									R - 1642			766.70									(3)
15222	5221	FRONTCON1	10+86.02	34.8' RT	MH		4.7							B			762.24	762.04		13					(4)
5223	5221	FRONTCON1	10+97.17	19.9' RT	CB	3.3							B - 9			766.30									
5314	6027	126CON	23+41.95	43.4' LT	INC												763.09	762.40	15						(6)
6027	6028	CSAH5CONN	1+54.19	108.2' RT	MH								A - 7D			740.90	731.08	730.54							INP MH
6028		CSAH5CONN	2+30.00	128.4' RT	APR												730.54								INP APRON
TOTALS						3.3	8.7	10.6	4.2	5.7	8.2	8.2							188	80	8	4	4	47	

NOTE: STA. AND OFFSET IS AT
- CENTER OF STRUCTURE UNLESS NOTED OTHERWISE.
- END OF RC APRON, CS SAFETY APRON
- END OF BARREL, CS PIPE

FLOWLINE (F.L.) ELEVATIONS ARE AT CENTER OF STRUCTURE ON PROFILES.
INLET AND OUTLET ELEVATIONS ON TABULATION ARE AT EDGE OF STRUCTURE.

ALL CONCRETE PIPE SEWER IS DESIGN 3006 GASKET JOINT PIPE.

(1) FOR CASTING ASSEMBLY KEY & SUMMARY, SEE SHEET NO. 411.
(2) INLET ELEVATION AT DOWN-STREAM STRUCTURE.
(3) CENTER OF CASTING.
(4) CENTER OF STRUCTURE.
(5) INCREASER PIPES.
(6) CONNECT TO EXISTING STORM SEWER.
(7) FOR DETAILS, SEE SHEET NO. 420.

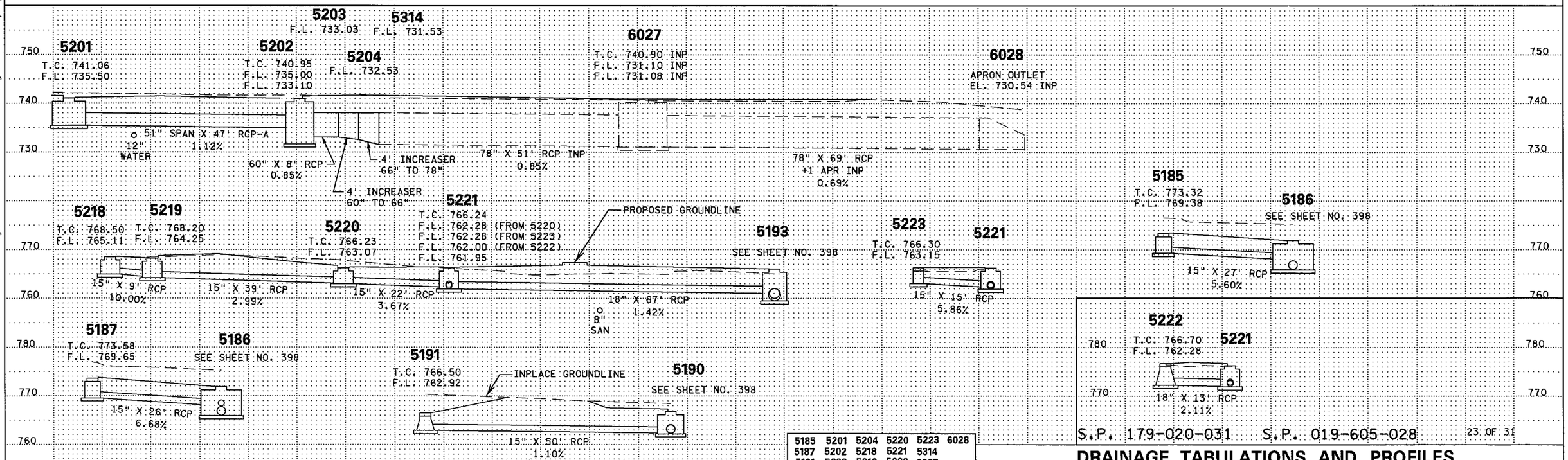

5185	5201	5204	5220	5223	6028
5187	5202	5218	5221	5314	
5191	5203	5219	5222	6027	

S.P. 179-020-031 S.P. 019-605-028

23 OF 31

DRAINAGE TABULATIONS AND PROFILES

DRAWN BY: CT | CHECKED BY: HS | CERTIFIED BY Scott Caldt LICENSED PROFESSIONAL ENGINEER | LIC. NO. 23344 DATE 6/18/12

STATE PROJ. NO. 1901-148 (T.H. 13) SHEET NO. 399 OF 442 SHEETS

PLOTTED/REVISED: 12-JUN-2012 15:18
DISTRICT #: METRO
IPLOT NAME: d190148_dpt23
PATH & FILENAME: Projects/DM_ROS/013/1901/148/Design/d190148_dpt.dgn

DRAINAGE TABULATION (THIS SHEET ONLY)

STRUCTURE NO. FLOWS FROM	STRUCTURE NO. FLOWS TO	STRUCTURE LOCATION ALIGN.	STATION	OFFSET	DRAINAGE STRUCTURES TYPE	PAY HEIGHT H LIN FT	PAY HEIGHT G LIN FT	PAY HEIGHT DES SPEC 1 (5) LIN FT	CASTING ASSEMBLY TYPE (1)	CONE TYPE	STEPS REQ'D	TOP OF CASTING ELEV	OUTLET ELEV.	INLET ELEV. (2)	15" RCP CL II LIN FT	18" RCP CL V LIN FT	24" RCP CL III LIN FT	REMARKS
5200		NBCSAH5	122+02.42	59.1' RT					R - 1642			744.10						(3)
15200	5198	NBCSAH5	122+02.42	58.1' RT	MH		5.5			B			738.98	738.53	46			(4)
5214	5207	SBCSAH5	115+35.06	37.2' LT	CB	3.1			B - 9			772.86	769.70	769.41	62			
5215		SBCSAH5	120+50.40	24.2' LT					R - 3067V			753.26						(3)
15215	5197	SBCSAH5	120+50.40	24.2' LT	CB			14.2					739.15	738.96		91		(4) (6)
5216	5206	NBCSAH5	113+71.99	13.0' RT	CB	3.1			B - 9			779.50	776.33	776.01	46			
5217	5207	NBCSAH5	115+25.67	25.0' RT	CB	3.1			B - 9			773.15	769.98	769.42	58			
5224		NBCSAH5	120+31.44	59.1' RT	MH				R - 1642	B		749.60						(3)
15224	5197	NBCSAH5	120+31.44	58.1' RT	MH		4.8						744.80	742.64			46	(4)
6023	5215	SBCSAH5	120+62.22	189.5' LT	CB							747.61	744.00	742.02				CB INP
TOTALS						9.3	10.3	14.2							212	91	46	

NOTE: STA. AND OFFSET IS AT
- CENTER OF STRUCTURE UNLESS NOTED OTHERWISE.
- END OF RC APRON, CS SAFETY APRON
- END OF BARREL, CS PIPE

FLOWLINE (F.L.) ELEVATIONS ARE AT CENTER OF STRUCTURE ON PROFILES.
INLET AND OUTLET ELEVATIONS ON TABULATION ARE AT EDGE OF STRUCTURE.

ALL CONCRETE PIPE SEWER IS DESIGN 3006 GASKET JOINT PIPE.

(1) FOR CASTING ASSEMBLY KEY & SUMMARY, SEE SHEET NO. 411.
(2) INLET ELEVATION AT DOWN-STREAM STRUCTURE.
(3) CENTER OF CASTING.
(4) CENTER OF STRUCTURE.
(5) FOR DETAILS, SEE SHEET NO. 420.
(6) CONSTRUCT OVER EXISTING STORM SEWER PIPE - INCIDENTAL.

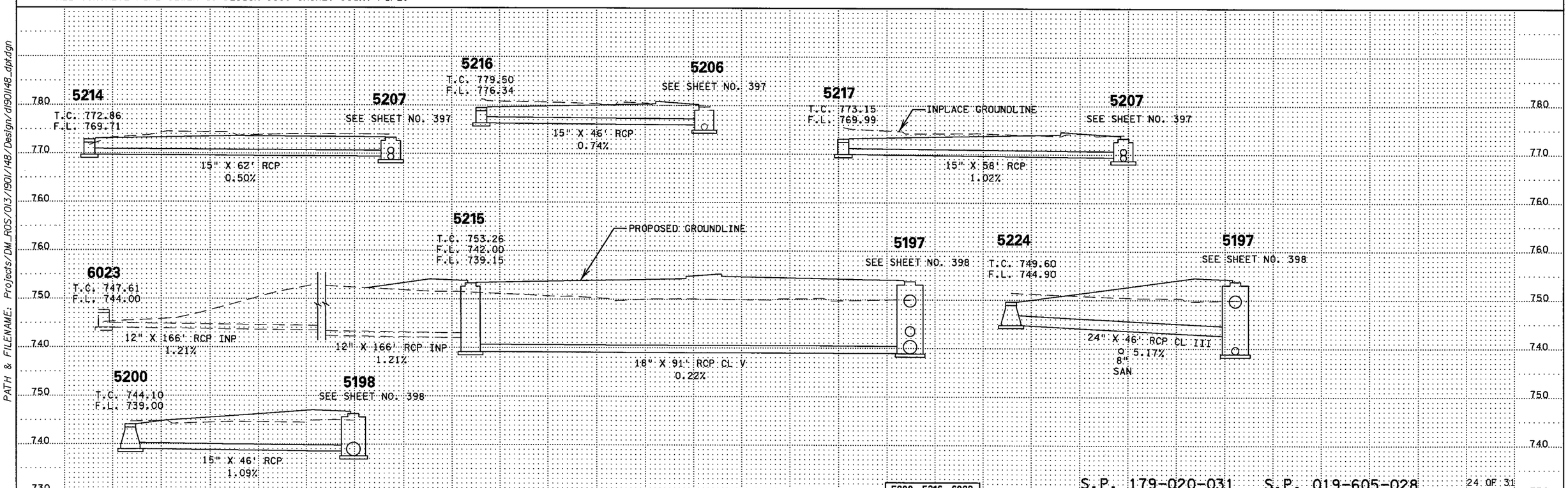

5200 5216 6023
5214 5217
5215 5224

S.P. 179-020-031 S.P. 019-605-028

24 OF 31

DRAINAGE TABULATIONS AND PROFILES

DRAWN BY: CT | CHECKED BY: HS | CERTIFIED BY _____ LICENSED PROFESSIONAL ENGINEER | LIC. NO. 23344 DATE 6/18/12

STATE PROJ. NO. 1901-148 (T.H. 13) SHEET NO. 400 OF 422 SHEETS

PLOTTED/REVISED: 13-JUN-2012 08:33
DISTRICT #: METRO
IPLOT NAME: d1901148_dpt24
PATH & FILENAME: Projects/DM_ROS/013/1901/148/Design/d1901148_dpt.dgn

DRAINAGE TABULATION (THIS SHEET ONLY)

STRUCTURE NO. FLOWS FROM	STRUCTURE NO. FLOWS TO	STRUCTURE LOCATION ALIGN.	STATION	OFFSET	DRAINAGE STRUCTURES TYPE	PAY HEIGHT F LIN FT	66-4020 LIN FT	84-4020 LIN FT	DES SPEC (7) LIN FT	DES SPEC 1 (8) LIN FT	CASTING ASSEMBLY TYPE (1)	CONE TYPE	STEPS REQ'D	TOP OF CASTING ELEV	OUTLET ELEV.	INLET ELEV. (2)	12" RCP CL II LIN FT	15" RCP CL II LIN FT	15" RCP CL V LIN FT	18" RCP CL II LIN FT	24" RCP CL II LIN FT	APRON EACH	APRON TYPE	GUIDE POSTS TYPE B EACH	REMARKS
5235	5236	126CON	21+00.00	45.0' RT	APR									737.21	737.51	737.10	14					1	12" RC APRON	1	(9)
5236		126CON	21+02.20	25.5' RT							R - 3067V			740.77											(3)
15236	5237	126CON	21+02.20	25.8' RT	CB					3.8					737.09	736.79		69							(4)
5237		126CON	21+70.58	31.6' RT							R - 3067V			740.89											(3)
15237	5238	126CON	21+70.58	31.9' RT	CB					4.2					736.77	736.61				37					(4)
5238		SBCSAH5	122+91.10	27.1' LT							R - 3067V			743.12											(3)
15238	5199	SBCSAH5	122+91.10	27.4' LT	CB					6.6					736.59	736.22					90				(4)
5239	5236	126CON	20+85.00	25.5' RT	CB				3.2		R - 3067V			740.75	737.66	737.17	17								
5240		SBCSAH5	122+82.75	72.4' LT							R - 1642	B		750.72											(3)
15240	5238	SBCSAH5	122+82.75	71.4' LT	MH	13.9									737.19	736.83			47						(4)
5250	5251	126CON	27+65.41	19.0' RT	CB				3.3		R - 3067V			741.52	738.36	737.89		31							(3)
5251		126CON	27+65.10	11.8' LT							R - 1642			741.81											(4)(5)
15251	6025	126CON	27+65.10	10.2' LT	MH		7.4								734.52	734.35									
5252	5251	126CON	27+65.35	19.5' LT	CB				3.3		R - 3067V			741.52	738.31	737.93		7							
5253	5254	126CON	25+44.72	30.2' RT	APR										736.18	735.02									(6)
5254		126CON	25+36.08	19.5' RT							R - 3067V			740.39											(3)
15254	5255	126CON	25+36.08	19.8' RT	CB					5.5					735.02	733.36		44							(4)(5)
5255		126CON	25+35.95	25.5' LT							R - 3067V			740.28											(3)
15255	6256	126CON	25+35.95	23.8' LT	CB			7.4							733.19	732.99									(4)(5)
6024	5251	126CON	28+70.29	10.9' LT	MH									741.57	736.18	734.52									INP MH
6025		126CON	25+99.02	8.7' LT											734.35										INP BEND
6256		126CON	24+98.71	35.8' LT										740.32	732.99										INP MH (10)
TOTALS						13.9	7.4	7.4	9.8	20.1							31	151	47	37	90	1		1	

NOTE: STA. AND OFFSET IS AT
- CENTER OF STRUCTURE UNLESS NOTED OTHERWISE.
- END OF RC APRON, CS SAFETY APRON
- END OF BARREL, CS PIPE

FLOWLINE (F.L.) ELEVATIONS ARE AT CENTER OF STRUCTURE ON PROFILES.
INLET AND OUTLET ELEVATIONS ON TABULATION ARE AT EDGE OF STRUCTURE.

ALL CONCRETE PIPE SEWER IS DESIGN 3006 GASKET JOINT PIPE.

(1) FOR CASTING ASSEMBLY KEY & SUMMARY, SEE SHEET NO. 411.
(2) INLET ELEVATION AT DOWN-STREAM STRUCTURE.
(3) CENTER OF CASTING.
(4) CENTER OF STRUCTURE.
(5) CONSTRUCT OVER EXISTING STORM SEWER PIPE - INCIDENTAL.
(6) EXISTING 12" CP PIPE APRON. FIELD VERIFY LOCATION. CONNECT TO STRUCTURE NO. 5254.
(7) FOR DETAILS, SEE SHEET NO. 420.
(8) FOR DETAILS, SEE SHEET NO. 420.
(9) TIE ALL JOINTS - INCIDENTAL.
(10) ADJUST FRAME & RING CASTING. SEE MISCELLANEOUS DRAINAGE ITEMS TABULATION ON SHEET NO. 46.

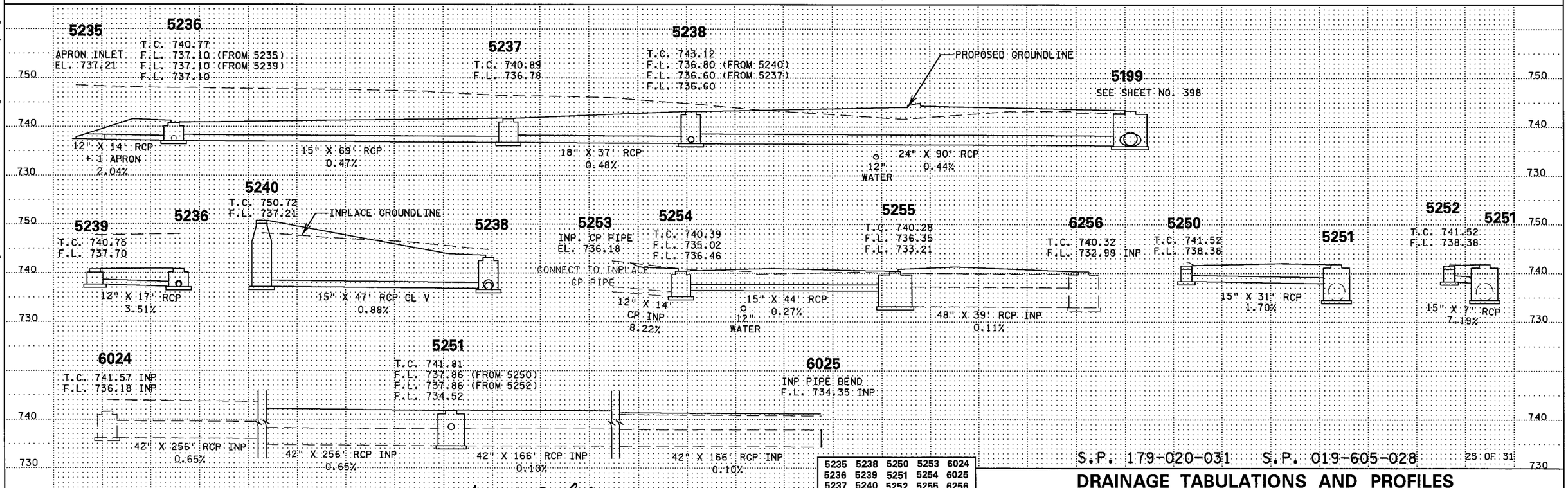

5235	5238	5250	5253	6024
5236	5239	5251	5254	6025
5237	5240	5252	5255	6256

S.P. 179-020-031 S.P. 019-605-028

25 OF 31

DRAINAGE TABULATIONS AND PROFILES

DRAWN BY: CT | CHECKED BY: HS | CERTIFIED BY _____ LICENSED PROFESSIONAL ENGINEER | LIC. NO. 23344 DATE 6/18/12

STATE PROJ. NO. 1901-148 (T.H. 13) SHEET NO. 401 OF 442 SHEETS

PLOTTED/REVISED: 12-JUN-2012 15:18
DISTRICT #: METRO
IPLOT NAME: d190ll48_dpt25
PATH & FILENAME: Projects/DM_ROS/013/1901/148/Design/d190ll48_dpt.dgn

DRAINAGE TABULATION (THIS SHEET ONLY)

STRUCTURE NO. FLOWS FROM	STRUCTURE NO. FLOWS TO	STRUCTURE LOCATION ALIGN.	STRUCTURE LOCATION STATION	STRUCTURE LOCATION OFFSET	DRAINAGE STRUCTURES TYPE	PAY HEIGHT DES SPEC (8) LIN FT	PAY HEIGHT DES SPEC 1 (9) LIN FT	CASTING ASSEMBLY TYPE (1)	CONE TYPE	STEPS REQ'D	TOP OF CASTING ELEV	OUTLET ELEV.	INLET ELEV. (2)	12" RCP CL II LIN FT	15" RCP CL II LIN FT	APRON EACH	APRON TYPE	GUIDE POSTS TYPE B EACH	REMARKS
5257		126CON	13+95.87	19.5' RT				R - 3067V			743.21								(3)
15257	5258	126CON	13+95.87	19.8' RT	CB		5.2					738.09	737.93		19				(4)
5258	5259	NWFRONT	5+24.99	20.3' LT	CB	3.3		R - 3067V			741.23	737.90	737.72		40				
5259	5260	NWFRONT	5+23.99	20.4' RT	CB	3.6		R - 3067V			741.22	737.70	737.67		12				
5260	5261	126CON	13+32.69	19.5' RT	CB	4.3		R - 3067V			741.87	737.65	737.27		80				
5261		126CON	12+61.84	19.5' LT				R - 3067V			742.78								(3)
15261	5262	126CON	12+61.84	19.8' LT	CB		5.6					737.25	736.88		75				(4)
5262		126CON	11+83.20	19.5' LT				R - 3067V			742.56								(3)
15262	5263	126CON	11+83.20	19.8' LT	CB		6.0					736.68	736.29		6				(4)
5263		126CON	11+76.70	19.5' LT				R - 3067V			742.59								(3)
15263	6264	126CON	11+76.70	19.8' LT	CB		6.5					736.13	735.49						(4)(5)
5265		126CON	11+86.07	19.5' RT				R - 3067V			742.60								(3)
15265	5266	126CON	11+86.07	19.8' RT	CB		6.3					736.32	736.24		6				(4)
5266		126CON	11+79.97	19.5' RT				R - 3067V			742.59								(3)
15266	6264	126CON	11+79.97	19.8' RT	CB		6.5					736.24	735.54						(4)(5)
5310	5311	13EB_MS	654.87.85	105.6' RT	CB	3.2		R - 3067V			731.32	728.26	728.02	6					(5)(6)(10)
5311		13EB_MS	654+89.03	94.1' RT	APR							728.02				1	12" RC APRON	1	(10)
5316	5257	126CON	13+96.00	44.0' RT	APR							742.50	738.11		19	1	15" RC APRON	1	
6018		126CON	11+00.00	0.4' LT								734.14							MH INP
6264	6018	126CON	11+75.37	1.0' LT	MH						742.98	735.31	734.14						MH INP (11)
6265	5310	13EB_MS	654+87.36	116.5' RT	MH			R - 1642			731.75	728.60	728.27						(7)
TOTALS						14.4	36.1							6	257	2		2	

NOTE: STA. AND OFFSET IS AT
- CENTER OF STRUCTURE UNLESS NOTED OTHERWISE.
- END OF RC APRON, CS SAFETY APRON
- END OF BARREL, CS PIPE

FLOWLINE (F.L.) ELEVATIONS ARE AT CENTER OF STRUCTURE ON PROFILES.
INLET AND OUTLET ELEVATIONS ON TABULATION ARE AT EDGE OF STRUCTURE.

ALL CONCRETE PIPE SEWER IS DESIGN 3006 GASKET JOINT PIPE.

(1) FOR CASTING ASSEMBLY KEY & SUMMARY, SEE SHEET NO. 411.
(2) INLET ELEVATION AT DOWN-STREAM STRUCTURE.
(3) CENTER OF CASTING.
(4) CENTER OF STRUCTURE.
(5) CONSTRUCT OVER EXISTING STORM SEWER PIPE - INCIDENTAL.
(6) TIE ALL JOINTS.
(7) CONVERT EXISTING CATCH BASIN TO A MANHOLE.
(8) FOR DETAILS, SEE SHEET NO. 420.
(9) FOR DETAILS, SEE SHEET NO. 420.
(10) FIELD VERIFY INVERTS AND DIRECTION OF FLOW.
(11) ADJUST FRAME & RING CASTING. SEE MISCELLANEOUS DRAINAGE ITEMS TABULATION ON SHEET NO. 45.

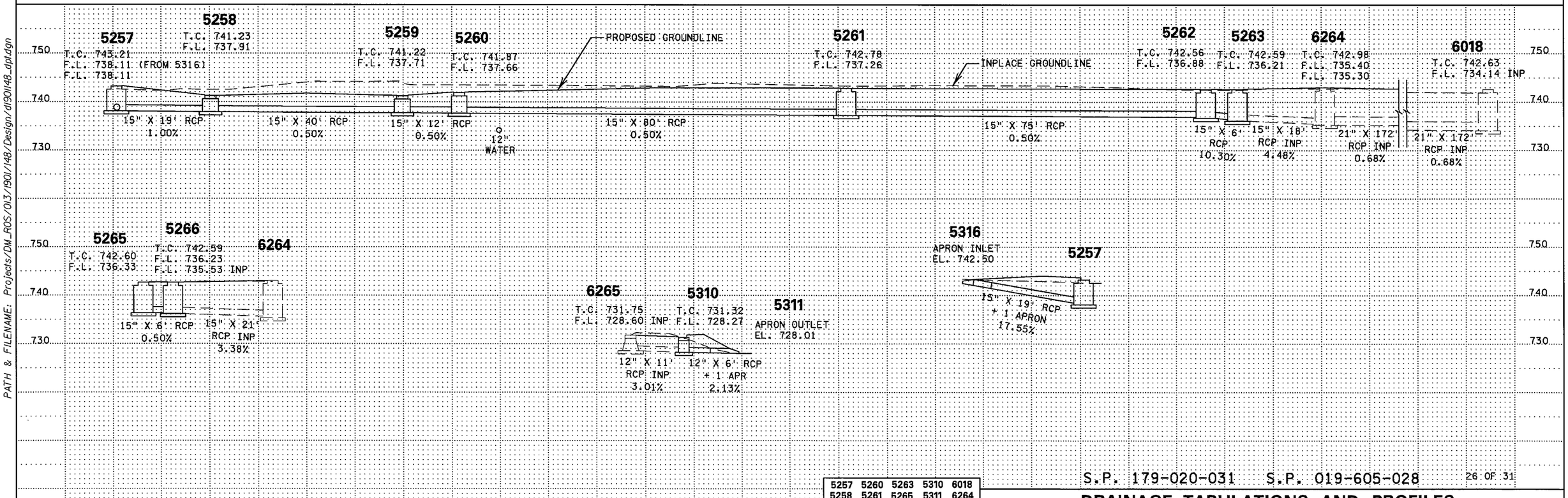

5257	5260	5263	5310	6018
5258	5261	5265	5311	6264
5259	5262	5266	5316	6265

S.P. 179-020-031 S.P. 019-605-028

DRAINAGE TABULATIONS AND PROFILES

DRAWN BY: CT | CHECKED BY: HS | CERTIFIED BY Scott Corbett LICENSED PROFESSIONAL ENGINEER | LIC. NO. 23344 DATE 6/18/12

STATE PROJ. NO. 1901-148 (T.H. 13) SHEET NO. 402 OF 442 SHEETS

PLOTTED/REVISED: 12-JUN-2012 15:19
DISTRICT #: METRO
IPLOT NAME: d1901148_dpt26
PATH & FILENAME: Projects/DM_ROS/013/1901/148/Design/d1901148_dpt.dgn

DRAINAGE TABULATION (THIS SHEET ONLY)

STRUCTURE NO. FLOWS FROM	STRUCTURE NO. FLOWS TO	STRUCTURE LOCATION ALIGN.	STATION	OFFSET	DRAINAGE STRUCTURES TYPE	PAY HEIGHT H LIN FT	G LIN FT	F LIN FT	DES SPEC (5) LIN FT	CASTING ASSEMBLY TYPE (1)	CONE TYPE	STEPS REQ'D	TOP OF CASTING ELEV	OUTLET ELEV.	INLET ELEV. (2)	12" RCP CL II LIN FT	15" RCP CL II LIN FT	15" RCP CL III LIN FT	18" RCP CL II LIN FT	18" RCP CL III LIN FT	REMARKS
5175		SWRAMP	57+49.39	20.8' RT						M - 11			787.00								(3)
15175	5315	SWRAMP	57+49.39	19.8' RT	CB			9.1						777.97	776.70					100	(4) (6)
5177	5400	SBCSAH5	111+00.10	25.0' LT	CB	3.7				B - 9			786.65	782.90	782.45				13		
5178	5401	SBCSAH5	111+46.47	27.6' LT	CB	3.3				B - 9			785.85	782.44	780.64		17				
5267	5313	DRIVE2	10+30.88	13.0' RT	CB				3.5	R - 3067V			743.97	740.59	740.29		12				
5268	5313	DRIVE2	10+30.88	13.0' LT	CB				3.5	R - 3067V			743.97	740.59	740.29		12				
5269	5270	126CON	20+84.75	19.5' LT	CB				3.5	R - 3067V			740.87	737.53	737.27	6					
5270	5271	126CON	20+90.81	19.5' LT	CB				3.8	R - 3067V			740.87	737.16	735.68	80					(3)
5271		126CON	21+66.19	44.3' LT						R - 1642			739.01								(4)
15271	5415	126CON	21+66.19	43.3' LT	MH		4.7				B			734.47	733.64					10	
5272	5271	SBCSAH5	124+16.91	14.1' LT	CB				3.8	R - 3067V			739.98	736.33	735.43		50				
5273	5272	NBCSAH5	124+18.85	13.5' RT	CB					R - 3067V			739.66	736.42	736.35		74				(3)
5313		DRIVE2	10+30.88	0.0' LT						R - 1642			744.22								(4)
15313	5411	DRIVE2	10+30.88	1.0' LT	MH			9.0			B			735.31	734.67			8			(3)
5315		SBCSAH5	111+51.95	52.9' LT						M - 11			782.69								(4)
15315	5401	SBCSAH5	111+51.95	51.9' LT	CB			6.1			B			776.64	776.54				10		
6026	5175	SBCSAH5	112+12.40	258.1' LT	MH								790.11	780.46	778.94						INP MH
TOTALS						7.0	4.7	24.2	18.1							86	165	8	23	110	

NOTE: STA. AND OFFSET IS AT
- CENTER OF STRUCTURE UNLESS NOTED OTHERWISE.
- END OF RC APRON, CS SAFETY APRON
- END OF BARREL, CS PIPE

FLOWLINE (F.L.) ELEVATIONS ARE AT CENTER OF STRUCTURE ON PROFILES.
INLET AND OUTLET ELEVATIONS ON TABULATION ARE AT EDGE OF STRUCTURE.

ALL CONCRETE PIPE SEWER IS DESIGN 3006 GASKET JOINT PIPE.

(1) FOR CASTING ASSEMBLY KEY & SUMMARY, SEE SHEET NO. 411.
(2) INLET ELEVATION AT DOWN-STREAM STRUCTURE.
(3) CENTER OF CASTING.
(4) CENTER OF STRUCTURE.
(5) FOR DETAILS, SEE SHEET NO. 420.
(6) CONSTRUCT OVER EXISTING STORM SEWER PIPE - INCIDENTAL.

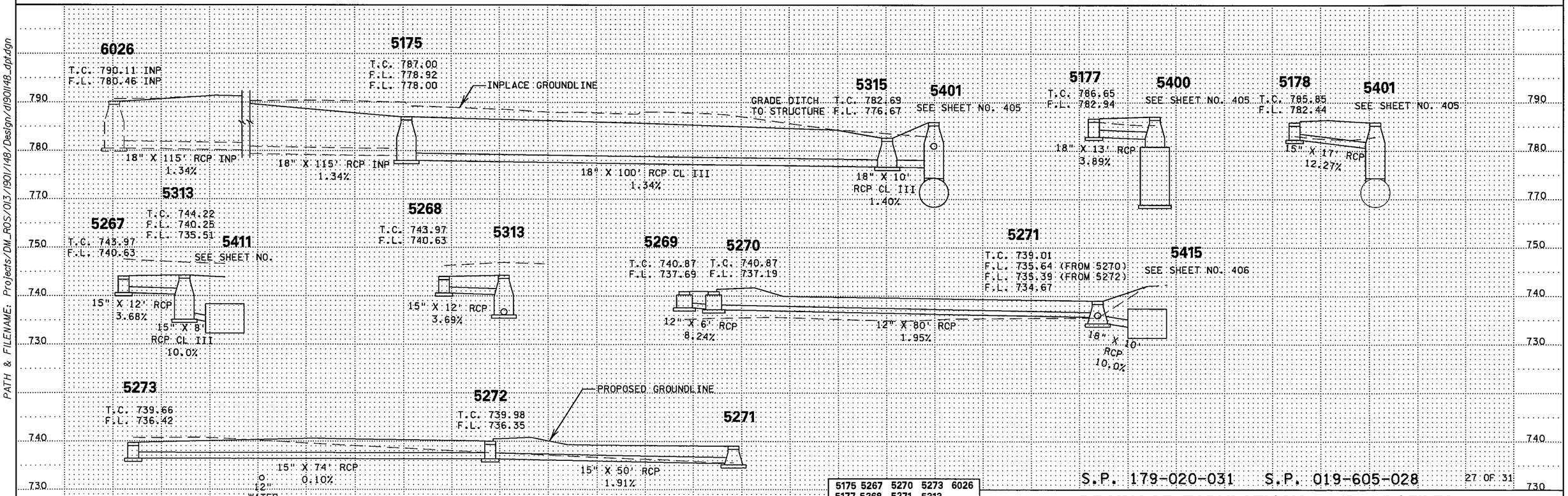

5175 5267 5270 5273 6026				
5177 5268 5271 5313				
5178 5269 5272 5315				

S.P. 179-020-031 S.P. 019-605-028

27 OF 31

DRAINAGE TABULATIONS AND PROFILES

DRAWN BY: CT | CHECKED BY: HS | CERTIFIED BY _____ LICENSED PROFESSIONAL ENGINEER | LIC. NO. 23344 DATE 6/18/12

STATE PROJ. NO. 1901-148 (T.H. 13) SHEET NO. 403 OF 442 SHEETS

PLOTTED/REVISED: 12-JUN-2012 15:19
DISTRICT #: METRO
IPLOT NAME: d1901148_dpt27
PATH & FILENAME: Projects/DM_ROS/013/1901/148/Design/d1901148_dpt.dgn

DRAINAGE TABULATION (THIS SHEET ONLY)

STRUCTURE NO. FLOWS FROM	STRUCTURE NO. FLOWS TO	STRUCTURE LOCATION ALIGN.	STRUCTURE LOCATION STATION	STRUCTURE LOCATION OFFSET	DRAINAGE STRUCTURES TYPE	PAY HEIGHT 102-4020 LIN FT	PAY HEIGHT DES SPEC (6) LIN FT	PAY HEIGHT DES SPEC 1 (7) LIN FT	CASTING ASSEMBLY TYPE (1)	CONE TYPE	STEPS REQ'D	TOP OF CASTING ELEV	OUTLET ELEV.	INLET ELEV. (2)	12" RCP CL II LIN FT	15" RCP CL II LIN FT	REMARKS
5165	5161	EBWIL	44+62.13	25.0' RT	CB		4.2		R - 3067V			789.01	784.93	784.03		71	
5166	5167	WBWIL	44+64.39	25.0' LT	CB		3.5		R - 3067V			789.64	786.29	785.92		33	
5167	5165	EBWIL	44+63.41	25.0' LT	CB		3.3		R - 3067V			789.05	785.90	785.08		49	
5281	5282	EBWIL	41+90.03	25.0' RT	CB		3.0		R - 3067V			787.20	784.29	783.39	99		
5282	5283	EBWIL	40+90.85	25.0' RT	CB		4.0		R - 3067V			787.20	783.35	783.26	12		
5283		EBWIL	40+78.43	25.0' RT					R - 3067V			786.86					(3)
15283		EBWIL	40+78.43	25.3' RT	CB			3.8					783.22				(4)(5)
5284	5283	EBWIL	40+36.66	25.0' RT	CB		3.0		R - 3067V			786.85	783.95	783.27	42		
5285	5291	EBWIL	42+03.30	9.8' LT	CB		3.2		R - 3067V			787.57	784.44	784.07		121	
5287	5288	WBWIL	41+91.29	24.5' LT	CB		3.2		R - 3067V			787.13	784.09	783.35	109		
5288		WBWIL	40+82.59	25.0' LT					R - 3067V			786.72					(3)
15288		WBWIL	40+82.59	25.3' LT	CB			4.1					783.19				(4)(5)
5289	5288	WBWIL	40+42.97	25.5' LT	CB				R - 3067V			786.66	783.69	783.36	40		
5290		WBWIL	40+81.57	13.0' RT					R - 3067V			787.44					(3)
15290		WBWIL	40+81.57	16.2' RT	CB	16.6							771.18				(4)(5)
5291	5290	EBWIL	40+82.12	1.0' LT	CB		3.4		R - 3067V			787.35	784.07	784.02		13	
TOTALS						16.6	30.8	7.4							302	287	

NOTE: STA. AND OFFSET IS AT
- CENTER OF STRUCTURE UNLESS NOTED OTHERWISE.
- END OF RC APRON, CS SAFETY APRON
- END OF BARREL, CS PIPE

FLOWLINE (F.L.) ELEVATIONS ARE AT CENTER OF STRUCTURE ON PROFILES.
INLET AND OUTLET ELEVATIONS ON TABULATION ARE AT EDGE OF STRUCTURE.

ALL CONCRETE PIPE SEWER IS DESIGN 3006 GASKET JOINT PIPE.

(1) FOR CASTING ASSEMBLY KEY & SUMMARY, SEE SHEET NO. 411.
(2) INLET ELEVATION AT DOWN-STREAM STRUCTURE.
(3) CENTER OF CASTING.
(4) CENTER OF STRUCTURE.
(5) CONSTRUCT OVER EXISTING STORM SEWER PIPE - INCIDENTAL.
(6) FOR DETAILS, SEE SHEET NO. 420.
(7) FOR DETAILS, SEE SHEET NO. 420.

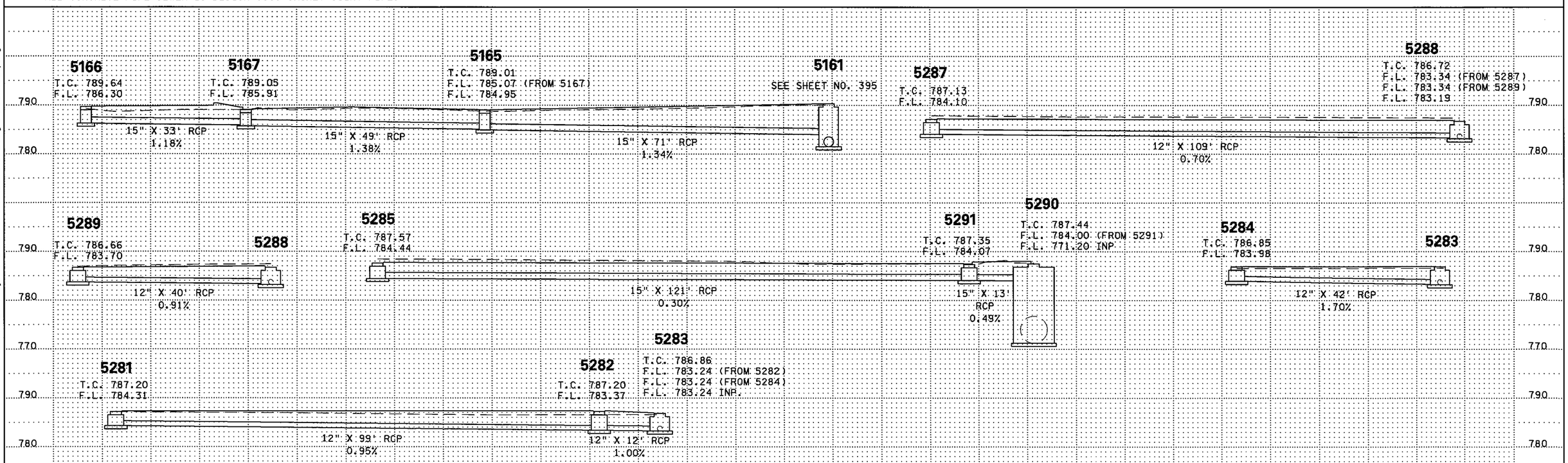

5165	5281	5284	5288	5291
5166	5282	5285	5289	
5167	5283	5287	5290	

S.P. 179-020-031 S.P. 019-605-028

28 OF 31

DRAINAGE TABULATIONS AND PROFILES

DRAWN BY: CT | CHECKED BY: HS | CERTIFIED BY Scott Corbin LICENSED PROFESSIONAL ENGINEER | LIC. NO. 23344 DATE 6/18/12

STATE PROJ. NO. 1901-148 (T.H. 13) SHEET NO. 404 OF 442 SHEETS

PLOTTED/REVISED: 12-JUN-2012 15:19
DISTRICT #: METRO
IPLOT NAME: dl901l48_dpt28
PATH & FILENAME: Projects/DM_ROS/013/1901/148/Design/dl901l48_dpt.dgn

DRAINAGE TABULATION (THIS SHEET ONLY)

STRUCTURE NO. FLOWS FROM	STRUCTURE NO. FLOWS TO	STRUCTURE LOCATION ALIGN.	STATION	OFFSET		DRAINAGE STRUCTURES TYPE	PAY HEIGHT F LIN FT	J LIN FT	120-4020 LIN FT	DES SPEC 8 EACH	DES SPEC 9 EACH	CASTING ASSEMBLY TYPE (1)	CONE TYPE	STEPS REQ'D	TOP OF CASTING OR COVER ELEV	OUTLET ELEV.	INLET ELEV. (2)	72" RCP CL II LIN FT	72" RCP CL III LIN FT	72" RCP CL IV LIN FT	REMARKS
5400	5401	SBCSAH5	110+99.73	12.4'	LT	MH					1				787.05	768.88	768.40			57.7	(7)(9)(13)
5401		SBCSAH5	111+47.95	44.1'	LT							M - 11			785.89						(3)
15401	5402	SBCSAH5	111+47.95	44.1'	LT	CB		16.8					B			768.40	768.04			47.1	(4)(9)
5402		SWRAMP	58+21.59	3.1'	LT										785.24						(3)
15402		SWRAMP	58+21.59	4.1'	LT	MH	8.0														(4)
25402	5403	SWRAMP	58+21.59	7.9'	LT	MH			9.5						776.62	767.85	751.51			549.7	(4)(9)
5403	5404	SWRAMP	52+71.83	2.5'	LT	BEND										751.51	747.02	28.0			(5)(9)(10)
5404	5405	SWRAMP	52+44.19	1.6'	LT	BEND										747.02	746.48	18.0			(5)(9)(10)
5405	5406	SWRAMP	52+26.20	0.8'	LT	BEND										746.48	745.05	47.9			(6)(9)(11)
5406	5407	13EB	683+45.23	26.1'	RT	BEND										745.05	744.93	4.0			(6)(12)
5407	5408	13EB	683+45.24	22.1'	RT	TEE				1						744.93	739.68		179.8		(8)
5408		NWRAMP	76+37.85	9.0'	RT							D - 4			753.40						(3)
15408	5409	NWRAMP	76+41.72	9.0'	RT	CB			13.8							739.45	735.20	248.9			(4)
TOTALS							8.0	16.8	23.3	1	1							346.8	179.8	654.5	

NOTE: STA. AND OFFSET IS AT
- CENTER OF STRUCTURE UNLESS NOTED OTHERWISE.
- END OF RC APRON, CS SAFETY APRON
- END OF BARREL, CS PIPE

FLOWLINE (F.L.) ELEVATIONS ARE AT CENTER OF STRUCTURE ON PROFILES.
INLET AND OUTLET ELEVATIONS ON TABULATION ARE AT EDGE OF STRUCTURE.

ALL CONCRETE PIPE SEWER IS DESIGN 3006 GASKET JOINT PIPE.

(1) FOR CASTING ASSEMBLY KEY & SUMMARY, SEE SHEET NO. 411.
(2) INLET ELEVATION AT DOWN-STREAM STRUCTURE.
(3) CENTER OF CASTING.
(4) CENTER OF STRUCTURE.

(5) INCLUDES 1 - 7°30' VERTICAL LONG RADIUS BEND. 4' LAYING LENGTH.
(6) INCLUDES 12 - 7°30' HORIZONTAL LONG RADIUS BENDS. 4' LAYING LENGTH.
(7) FOR DETAILS, SEE SHEET NO. 413.
(8) FOR DETAILS, SEE SHEET NO. 418.
(9) TIE ALL JOINTS.
(10) STATION AND OFFSET AT CENTER OF BEND.
(11) STATION AND OFFSET AT BEGINNING OF FIRST BEND.
(12) STATION AND OFFSET AT END OF LAST BEND.
(13) STATION AND OFFSET SHOWN ON DESIGN SPECIAL 9 DETAILS.

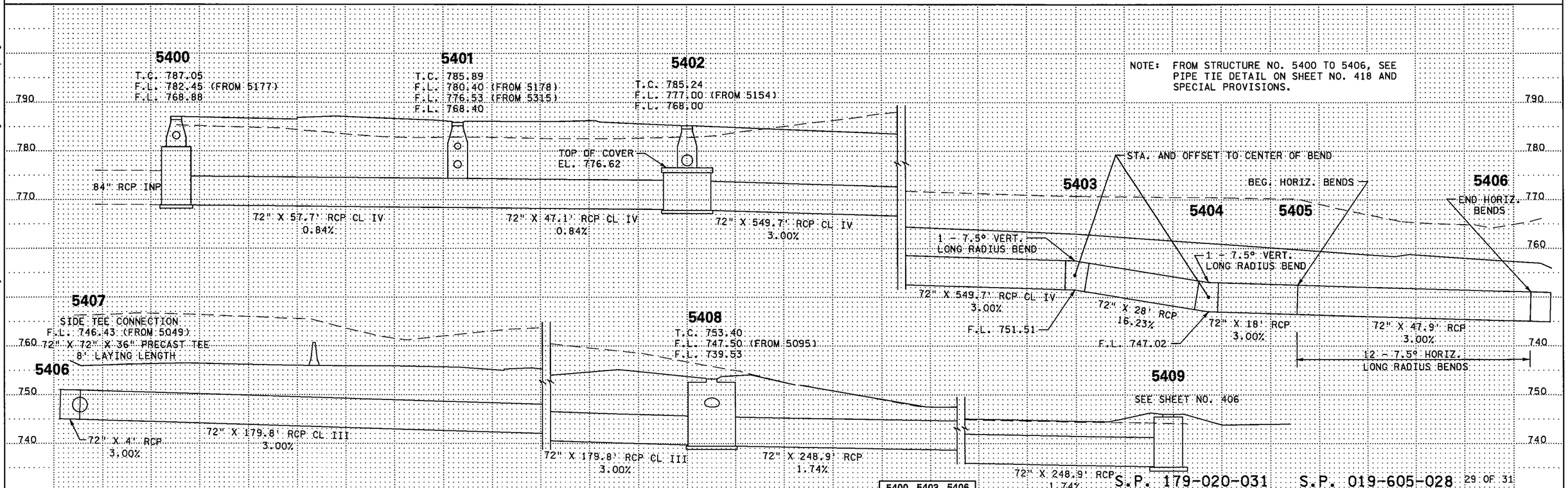

5400	5403	5406
5401	5404	5407
5402	5405	5408

S.P. 179-020-031 S.P. 019-605-028 29 OF 31

DRAINAGE TABULATIONS AND PROFILES

DRAWN BY: CT | CHECKED BY: HS | CERTIFIED BY Scott Carlson LICENSED PROFESSIONAL ENGINEER | LIC. NO. 23344 DATE 6/18/12

STATE PROJ. NO. 1901-148 (T.H. 13) SHEET NO. 405 OF 442 SHEETS

PLOTTED/REVISED: 12-JUN-2012 15:19
DISTRICT #: METRO
IPLOT NAME: d1901148_dpt29
PATH & FILENAME: Projects/DM_ROS/013/1901/148/Design/d1901148_dpt.dgn

DRAINAGE TABULATION (THIS SHEET ONLY)

STRUCTURE NO.		STRUCTURE LOCATION			DRAINAGE STRUCTURES																
						PAY HEIGHT															
FLOWS FROM	FLOWS TO	ALIGN.	STATION	OFFSET	TYPE	DES SPEC 11 EACH	DES SPEC 12 EACH	DES SPEC 2 EACH	DES SPEC 3 EACH	DES SPEC 4 EACH	DES SPEC 5 EACH	DES SPEC 6 EACH	DES SPEC 7 EACH	TOP OF CASTING ELEV	OUTLET ELEV.	INLET ELEV. (1)	102" RCP-A CL IIA LIN FT	8' X 6' BOX CULVERT CL 2 (2) LIN FT	END SECTION EACH	TYPE	REMARKS
5409	5410	NWFRONT	5+52.42	49.5' RT	MH								1	746.00	735.20	732.41	214.6				(3)(12)
5410	5411	126CON	15+09.40	19.4' RT	MH							1		743.67	732.41	732.30		72.5			(4)(12)(14)
5411	5412	DRIVE2	10+22.50	0.0' LT	TAP						1				732.30	732.12		111.6			(5)
5412	5413	126CON	16+97.49	19.4' RT	BEND					1					732.12	732.01		66.0			(6)
5413	5414	126CON	17+68.20	19.3' RT	BEND				1						732.01	731.88		82.2			(7)
5414	5415	126CON	18+56.40	19.3' RT	BEND			1							731.88	731.39		310.0			(8)
5415	5416	126CON	21+69.14	34.5' LT	TAP		1								731.39	731.15		149.4			(9)
5416	5417	NBCSAH5	124+17.73	41.8' RT	MH	1								742.50	731.15	731.00		83.0			(10)(12)(14)
5417		CSAH5CONN	2+33.50	75.7' RT	APR										731.00				1	8' X 6'	(11)
TOTALS						1	1	1	1	1	1	1	1				214.6	874.7	1		

NOTE: STA. AND OFFSET IS AT
- CENTER OF STRUCTURE UNLESS NOTED OTHERWISE.
- END OF RC APRON, CS SAFETY APRON
- END OF BARREL, CS PIPE

FLOWLINE (F.L.) ELEVATIONS ARE AT CENTER OF STRUCTURE ON PROFILES.
INLET AND OUTLET ELEVATIONS ON TABULATION ARE AT EDGE OF STRUCTURE.

ALL CONCRETE PIPE SEWER IS DESIGN 3006 GASKET JOINT PIPE.

(1) INLET ELEVATION AT DOWN-STREAM STRUCTURE.
(2) FOR DETAILS, SEE SHEET NO. 423.
(3) FOR DETAILS, SEE SHEET NO. 416.
(4) FOR DETAILS, SEE SHEET NO. 415.
(5) FOR DETAILS, SEE SHEET NO. 418.
(6) FOR DETAILS, SEE SHEET NO. 417.
(7) FOR DETAILS, SEE SHEET NO. 417.
(8) FOR DETAILS, SEE SHEET NO. 417.
(9) FOR DETAILS, SEE SHEET NO. 418.
(10) FOR DETAILS, SEE SHEET NO. 414.
(11) FOR DETAILS, SEE SHEET NO. 424 TO 427.
(12) STATION AND OFFSET LOCATION SHOWN ON DESIGN SPECIAL DETAILS.
(13) CENTER OF CASTING.
(14) CENTER OF STRUCTURE.

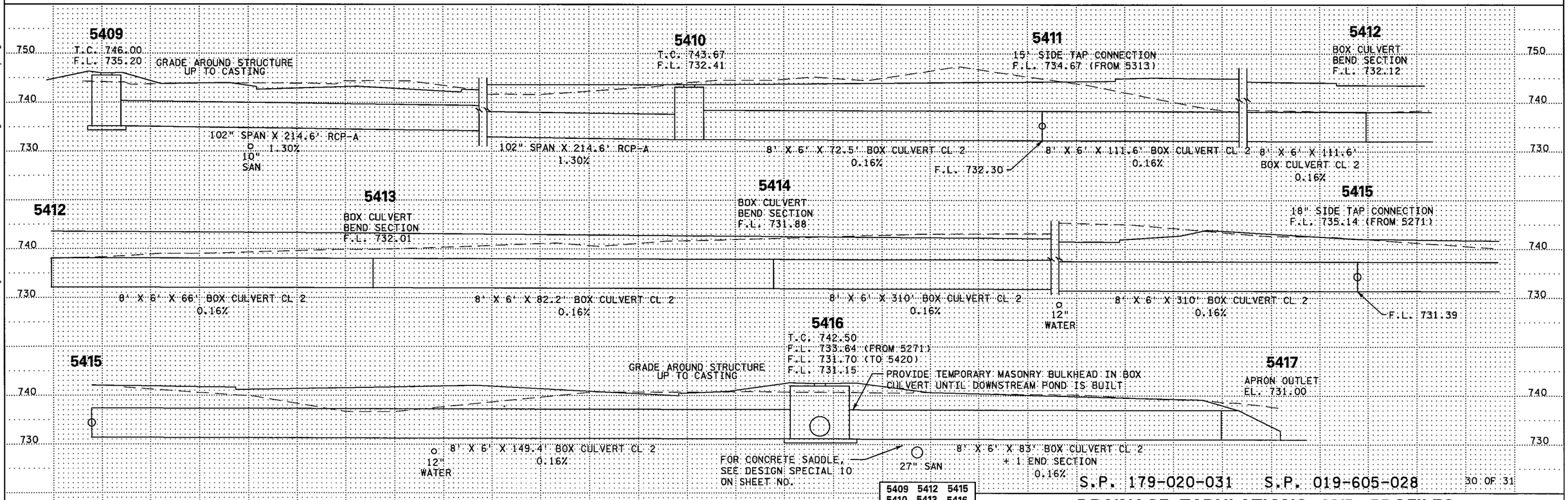

5409	5412	5415
5410	5413	5416
5411	5414	5417

S.P. 179-020-031 S.P. 019-605-028

30 OF 31

DRAINAGE TABULATIONS AND PROFILES

DRAWN BY: CT | CHECKED BY: HS | CERTIFIED BY _____ LICENSED PROFESSIONAL ENGINEER | LIC. NO. 23344 DATE 6/18/12

STATE PROJ. NO. 1901-148 (T.H. 13) SHEET NO. 406 OF 442 SHEETS

PLOTTED/REVISED: 12-JUN-2012 15:19
DISTRICT #: METRO
IPLOT NAME: d190l148_dpt30
PATH & FILENAME: Projects/DM_ROS/013/190l/148/Design/d190l148_dpt.dgn

DRAINAGE TABULATION (THIS SHEET ONLY)

STRUCTURE NO. FLOWS FROM	STRUCTURE NO. FLOWS TO	STRUCTURE LOCATION ALIGN.	STRUCTURE LOCATION STATION	STRUCTURE LOCATION OFFSET	DRAINAGE STRUCTURES TYPE	PAY HEIGHT 66-4020 LIN FT	CASTING ASSEMBLY TYPE (1)	CONE TYPE	STEPS REQ'D	TOP OF CASTING ELEV	OUTLET ELEV.	INLET ELEV. (2)	48" CP PIPE SEWER LIN FT	APRON EACH	APRON TYPE	GUIDE POSTS TYPE B EACH	RANDOM RIPRAP CL IV (5) CU YD	GEOTEXTILE FILTER TYPE IV SQ YD	REMARKS
5416	5420	NBCSAH5	124+17.73	41.8' RT	MH					742.50	731.15	731.00	38						(6)
5420		NBCSAH5	124+34.82	76.6' RT			R - 1642			740.11									(3)
15420	5421	NBCSAH5	124+34.82	77.6' RT	MH	9.0					731.26	730.50	72						(4)
5421		CSAH5CONN	2+24.83	116.8' RT	APR						730.50			1	48" GS APRON	1	32	48	
TOTALS						9.0							110	1		1	32	48	

NOTE: STRUCTURES 5420 & 5421 ARE TEMPORARY AND WILL REMAIN IN PLACE UNTIL THE CITY OF BURNSVILLE'S POND IS CONSTRUCTED. TEMPORARY PIPES AND STRUCTURES TO BE REMOVED WITH CITY PROJECT.

(1) FOR CASTING ASSEMBLY KEY & SUMMARY, SEE SHEET NO. 411.
(2) INLET ELEVATION AT DOWN-STREAM STRUCTURE.
(3) CENTER OF CASTING.
(4) CENTER OF STRUCTURE.
(5) FOR DETAILS, SEE STANDARD PLATE 3133.
RIPRAP IS TO EXTEND 2 FEET UNDER THE PIPE APRON.
(6) FOR ADDITIONAL INFORMATION, SEE SHEET NO. 406.

NOTE: STA. AND OFFSET IS AT
- CENTER OF STRUCTURE UNLESS NOTED OTHERWISE.
- END OF RC APRON, CS SAFETY APRON
- END OF BARREL, CS PIPE

FLOWLINE (F.L.) ELEVATIONS ARE AT CENTER OF STRUCTURE ON PROFILES.
INLET AND OUTLET ELEVATIONS ON TABULATION ARE AT EDGE OF STRUCTURE.

ALL CONCRETE PIPE SEWER IS DESIGN 3006 GASKET JOINT PIPE.

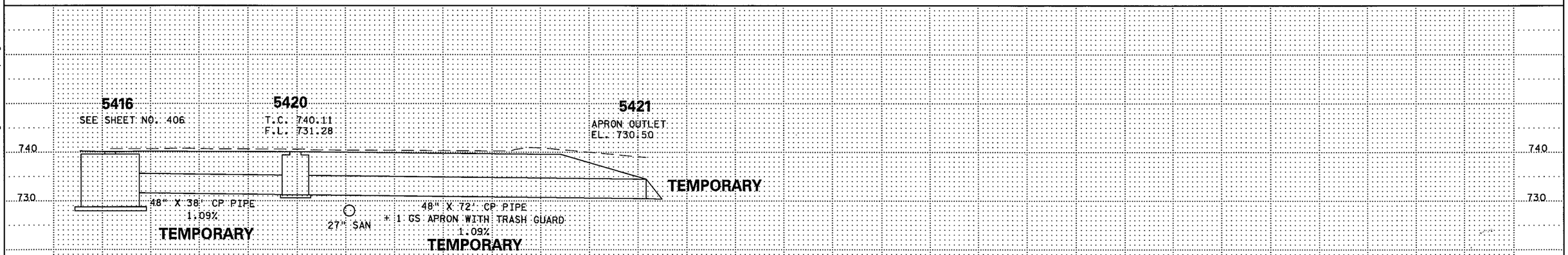

S.P. 179-020-031 S.P. 019-605-028 31 OF 31

5420
5421

DRAINAGE TABULATIONS AND PROFILES

DRAWN BY: CT | CHECKED BY: HS | CERTIFIED BY Scott Carlson LICENSED PROFESSIONAL ENGINEER | LIC. NO. 23344 DATE 6/18/12

STATE PROJ. NO. 1901-148 (T.H. 13) SHEET NO. 407 OF 442 SHEETS

PLOTTED/REVISED: 12-JUN-2012 15:19
DISTRICT #: METRO
IPLOT NAME: dl901148_dpt31
PATH & FILENAME: Projects/DM_ROS/013/1901/148/Design/dl901148_dpt.dgn

STORM SEWER SUMMARY

DD

ITEM	UNIT	QUANTITIES FROM SHEET NO. 377	378	379	380	381	382	383	384	385	386	387	388	389	390	391	392	393	394	SHEET TOTALS
12" RC PIPE SEWER DESIGN 3006 CL II	LIN FT				39	30										165	45			279
15" RC PIPE SEWER DESIGN 3006 CL II	LIN FT	550	560	1166	439	79	1666		853	538	772	655	421	591	781	121	224	511	253	10180
15" RC PIPE SEWER DESIGN 3006 CL III	LIN FT								428											428
15" RC PIPE SEWER DESIGN 3006 CL IV	LIN FT																	71		71
15" RC PIPE SEWER DESIGN 3006 CL V	LIN FT																			
18" RC PIPE SEWER DESIGN 3006 CL II	LIN FT	141							339		243		78	30	157	132		139		1259
18" RC PIPE SEWER DESIGN 3006 CL III	LIN FT																			
18" RC PIPE SEWER DESIGN 3006 CL V	LIN FT																			
21" RC PIPE SEWER DESIGN 3006 CL II	LIN FT																			
24" RC PIPE SEWER DESIGN 3006 CL II	LIN FT					29		803		125	148		280		15				297	1697
24" RC PIPE SEWER DESIGN 3006 CL III	LIN FT														68					68
27" RC PIPE SEWER DESIGN 3006 CL II	LIN FT			12															176	188
27" RC PIPE SEWER DESIGN 3006 CL III	LIN FT									38						14				52
27" RC PIPE SEWER DESIGN 3006 CL V	LIN FT															115				115
30" RC PIPE SEWER DESIGN 3006 CL II	LIN FT																			
33" RC PIPE SEWER DESIGN 3006 CL II	LIN FT																			
33" RC PIPE SEWER DESIGN 3006 CL III	LIN FT							219												219
33" RC PIPE SEWER DESIGN 3006 CL V	LIN FT															200	446			646
36" RC PIPE SEWER DESIGN 3006 CL III	LIN FT							559												559
48" RC PIPE SEWER DESIGN 3006 CL II	LIN FT			28																28
48" RC PIPE SEWER DESIGN 3006 CL III	LIN FT			85																85
60" RC PIPE SEWER DESIGN 3006 CL II	LIN FT																			
66" RC PIPE SEWER DESIGN 3006 CL II	LIN FT																			
72" RC PIPE SEWER DESIGN 3006 CL II	LIN FT																			
72" RC PIPE SEWER DESIGN 3006 CL III	LIN FT																			
72" RC PIPE SEWER DESIGN 3006 CL IV	LIN FT																			
78" RC PIPE SEWER DESIGN 3006 CL IV	LIN FT																			
22" SPAN RC PIPE - ARCH SEWER CL. IIA	LIN FT														300					300
28" SPAN RC PIPE - ARCH SEWER CL. IIA	LIN FT					252									346					598
36" SPAN RC PIPE - ARCH SEWER CL. IIA	LIN FT												59							59
51" SPAN RC PIPE - ARCH SEWER CL. IIA	LIN FT																			
102" SPAN RC PIPE - ARCH SEWER CL. IIA	LIN FT																			
48" STEEL CASING PIPE	LIN FT															80				80
8X6 PRECAST CONCRETE BOX CULVERT	LIN FT																			
12" CP PIPE SEWER (SMOOTH)	LIN FT																			
48" CP PIPE SEWER (SMOOTH)	LIN FT																			
12" RC PIPE APRON	EACH																			
15" RC PIPE APRON	EACH					1								1				1		3
18" RC PIPE APRON	EACH													1						1
48" GS PIPE APRON	EACH																			
8X6 PRECAST CONCRETE BOX CULVERT END SECTION	EACH																			
GUIDE POST TYPE B	EACH					1								2				1		4
RANDOM RIPRAP CL II	CU YD													3.1				3.1		6.2
RANDOM RIPRAP CL IV	CU YD																			
GEOTEXTILE FILTER TYPE II	SQ YD													9.3				9.3		18.6
GEOTEXTILE FILTER TYPE IV	SQ YD																			
CONSTRUCT BULKHEAD	EACH																			
CONNECT INTO EXISTING DRAINAGE STRUCTURE	EACH	1	1		1										1			1		5
CONNECT TO EXISTING STORM SEWER	EACH			1																1

S.P. 179-020-031 S.P. 019-605-028

STORM SEWER SUMMARY

DRAWN BY: CT | CHECKED BY: HS | CERTIFIED BY _____ LICENSED PROFESSIONAL ENGINEER LIC. NO. 18520 DATE 6/18/12

STATE PROJ. NO. 1901-148 (T.H. 13) SHEET NO. 408 OF 442 SHEETS

PLOTTED/REVISED: 14-JUN-2012 14:44
DISTRICT #: METRO
IPLOT NAME: d190l148_plpesuml
PATH & FILENAME: Projects/DM_ROS/013/1901/148/Design/d190l148_dpt.dgn

STORM SEWER SUMMARY

DD

ITEM	UNIT	QUANTITIES FROM SHEET NO. 395	396	397	398	399	400	401	402	403	404	405	406	407	SHEET TOTALS	①	②	③	PROJECT TOTALS
12" RC PIPE SEWER DESIGN 3006 CL II	LIN FT		86					31	6	86	302				511		488	302	790
15" RC PIPE SEWER DESIGN 3006 CL II	LIN FT	230	138	778		188	212	151	257	165	287				2406	1110	11189	287	12586
15" RC PIPE SEWER DESIGN 3006 CL III	LIN FT									8					8		436		436
15" RC PIPE SEWER DESIGN 3006 CL IV	LIN FT																71		71
15" RC PIPE SEWER DESIGN 3006 CL V	LIN FT							47							47		47		47
18" RC PIPE SEWER DESIGN 3006 CL II	LIN FT			9		80		37		23					149	141	1267		1408
18" RC PIPE SEWER DESIGN 3006 CL III	LIN FT									110					110		110		110
18" RC PIPE SEWER DESIGN 3006 CL V	LIN FT						91								91		91		91
21" RC PIPE SEWER DESIGN 3006 CL II	LIN FT				517										517		517		517
24" RC PIPE SEWER DESIGN 3006 CL II	LIN FT	136		68	18			90							312		2009		2009
24" RC PIPE SEWER DESIGN 3006 CL III	LIN FT						46								46		114		114
27" RC PIPE SEWER DESIGN 3006 CL II	LIN FT																188		188
27" RC PIPE SEWER DESIGN 3006 CL III	LIN FT																52		52
27" RC PIPE SEWER DESIGN 3006 CL V	LIN FT																115		115
30" RC PIPE SEWER DESIGN 3006 CL II	LIN FT				321										321		321		321
33" RC PIPE SEWER DESIGN 3006 CL II	LIN FT				247										247		247		247
33" RC PIPE SEWER DESIGN 3006 CL III	LIN FT																219		219
33" RC PIPE SEWER DESIGN 3006 CL V	LIN FT																646		646
36" RC PIPE SEWER DESIGN 3006 CL III	LIN FT																559		559
48" RC PIPE SEWER DESIGN 3006 CL II	LIN FT																28		28
48" RC PIPE SEWER DESIGN 3006 CL III	LIN FT																85		85
60" RC PIPE SEWER DESIGN 3006 CL II	LIN FT					8									8		8		8
66" RC PIPE SEWER DESIGN 3006 CL II	LIN FT					④ 4									4		4		4
72" RC PIPE SEWER DESIGN 3006 CL II	LIN FT											347			347			347	347
72" RC PIPE SEWER DESIGN 3006 CL III	LIN FT											180			180			180	180
72" RC PIPE SEWER DESIGN 3006 CL IV	LIN FT											655			655			655	655
78" RC PIPE SEWER DESIGN 3006 CL IV	LIN FT					⑤ 4									4		4		4
22" SPAN RC PIPE - ARCH SEWER CL. IIA	LIN FT																300		300
28" SPAN RC PIPE - ARCH SEWER CL. IIA	LIN FT																598		598
36" SPAN RC PIPE - ARCH SEWER CL. IIA	LIN FT																59		59
51" SPAN RC PIPE - ARCH SEWER CL. IIA	LIN FT				61	47									108		108		108
102" SPAN RC PIPE - ARCH SEWER CL. IIA	LIN FT												215		215			215	215
48" STEEL CASING PIPE	LIN FT																80		80
8X6 PRECAST CONCRETE BOX CULVERT	LIN FT												875		⑥ 875			875	875
12" CP PIPE SEWER (SMOOTH)	LIN FT		30												30		30		30
48" CP PIPE SEWER (SMOOTH)	LIN FT													110	110			110	110
12" RC PIPE APRON	EACH							1	1						2		2		2
15" RC PIPE APRON	EACH								1						1		4		4
18" RC PIPE APRON	EACH																1		1
48" GS PIPE APRON	EACH													1	1			1	1
8X6 PRECAST CONCRETE BOX CULVERT END SECTION	EACH												1		1			1	1
GUIDE POST TYPE B	EACH							1	2					1	4		7	1	8
RANDOM RIPRAP CL II	CU YD																6.2		6.2
RANDOM RIPRAP CL IV	CU YD													32	32			32	32
GEOTEXTILE FILTER TYPE II	SQ YD																18.6		18.6
GEOTEXTILE FILTER TYPE IV	SQ YD													48	48			48	48
CONSTRUCT BULKHEAD	EACH												1		1			1	1
CONNECT INTO EXISTING DRAINAGE STRUCTURE	EACH	1	1												2	2	5		7
CONNECT TO EXISTING STORM SEWER	EACH					1									1		2		2

① 100% STATE QUANTITY TOTALS
② INTERCHANGE QUANTITY TOTALS
③ SP 179-020-031 QUANTITY TOTALS
④ 60" TO 66" INCREASER.
⑤ 66" TO 78" INCREASER.
⑥ FOR BEND SECTIONS, SEE DETAIL SHEET NO. 417.

S.P. 179-020-031 S.P. 019-605-028

DRAWN BY: CT | CHECKED BY: HS | CERTIFIED BY _____ LICENSED PROFESSIONAL ENGINEER LIC. NO. 18520 DATE 6/18/12

STORM SEWER SUMMARY

STATE PROJ. NO. 1901-148 (T.H. 13) SHEET NO. 409 OF 442 SHEETS

PLOTTED/REVISED: 14-JUN-2012 14:44
DISTRICT #: METRO
IPLOT NAME: dl901148_plpsum2
PATH & FILENAME: Projects/DM_ROS/013/1901/148/Design/dl901148_dpt.dgn

DRAINAGE STRUCTURE SUMMARY

EE

ITEM	UNIT	QUANTITIES FROM SHEET NO.																		SHEET TOTALS
		377	378	379	380	381	382	383	384	385	386	387	388	389	390	391	392	393	394	
CONST DRAINAGE STRUCTURE DES F	LIN FT							11.8								12.2		17.8		41.8
CONST DRAINAGE STRUCTURE DES G	LIN FT	13.1	4.0	8.8		4.6									16.9					47.4
CONST DRAINAGE STRUCTURE DES H	LIN FT	3.2	10.2	9.8			3.5		3.1	6.9	7.2	3.9	3.9	16.9	6.6			6.3	6.8	88.3
CONST DRAINAGE STRUCTURE DES J	LIN FT																			
CONST DRAINAGE STRUCTURE DES SD-48	LIN FT	4.0	10.8				19.3	4.9	25.6	22.4	24.1	36.4	21.8	20.7	18.7			12.2	13.7	234.6
CONST DRAINAGE STRUCTURE DES 48-4020	LIN FT		4.7				22.5	5.8	7.2	7.7	11.0		10.6					28.1	10.3	107.9
CONST DRAINAGE STRUCTURE DES 54-4020	LIN FT			3.5		4.3					13.8		4.5		7.8	31.6	46.3		9.7	121.5
CONST DRAINAGE STRUCTURE DES 60-4020	LIN FT									13.3					6.9	9.6		5.1	4.6	39.5
CONST DRAINAGE STRUCTURE DES 66-4020	LIN FT							28.9					5.4			9.6				43.9
CONST DRAINAGE STRUCTURE DES 72-4020	LIN FT			19.5				10.2											5.9	35.6
CONST DRAINAGE STRUCTURE DES 78-4020	LIN FT			11.5		4.2														15.7
CONST DRAINAGE STRUCTURE DES 84-4020	LIN FT			6.4		4.3													7.3	18.0
CONST DRAINAGE STRUCTURE DES 90-4020	LIN FT																9.8			9.8
CONST DRAINAGE STRUCTURE DES 96-4020	LIN FT																			
CONST DRAINAGE STRUCTURE DES 102-4020	LIN FT																			
CONST DRAINAGE STRUCTURE DES 108-4020	LIN FT						4.2													4.2
CONST DRAINAGE STRUCTURE DES 120-4020	LIN FT				13.4															13.4
CONST DRAINAGE STRUCTURE DES SPECIAL	LIN FT				25.3	10.2										13.7	15.3			64.5
CONST DRAINAGE STRUCTURE DES SPECIAL 1	LIN FT				11.6	4.2										9.7	7.3			32.8
CONST DRAINAGE STRUCTURE DES SPECIAL 2	EACH																			
CONST DRAINAGE STRUCTURE DES SPECIAL 3	EACH																			
CONST DRAINAGE STRUCTURE DES SPECIAL 4	EACH																			
CONST DRAINAGE STRUCTURE DES SPECIAL 5	EACH																			
CONST DRAINAGE STRUCTURE DES SPECIAL 6	EACH																			
CONST DRAINAGE STRUCTURE DES SPECIAL 7	EACH																			
CONST DRAINAGE STRUCTURE DES SPECIAL 8	EACH																			
CONST DRAINAGE STRUCTURE DES SPECIAL 9	EACH																			
CONST DRAINAGE STRUCTURE DES SPECIAL 11	EACH																			
CONST DRAINAGE STRUCTURE DES SPECIAL 12	EACH																			
CASTING ASSEMBLY	EACH	6	9	10	10	10	10	8	8	11	12	10	10	10	14	10	9	13	12	182

S.P. 179-020-031 S.P. 019-605-028

DRAINAGE STRUCTURE SUMMARY

DRAWN BY: CT | CHECKED BY: HS | CERTIFIED BY LICENSED PROFESSIONAL ENGINEER LIC. NO. 18520 DATE 8/06/12

STATE PROJ. NO. 1901-148 (T.H. 13) SHEET NO. 410 OF 442 SHEETS

PLOTTED/REVISED: 06-AUG-2012 07:57
DISTRICT #: METRO
IPLOT NAME: dl901l48_strctsuml
PATH & FILENAME: Projects/DM_ROS/013/1901/148/Design/dl901l48_dpt.dgn

DRAINAGE STRUCTURE SUMMARY

EE

ITEM	UNIT	QUANTITIES FROM SHEET NO. 395	396	397	398	399	400	401	402	403	404	405	406	407	SHEET TOTALS	①	②	③	PROJECT TOTALS
CONST DRAINAGE STRUCTURE DES F	LIN FT							13.9		24.2		8.0			46.1		79.9	8.0	87.9
CONST DRAINAGE STRUCTURE DES G	LIN FT			5.4		8.7	10.3			4.7					29.1	17.1	59.4		76.5
CONST DRAINAGE STRUCTURE DES H	LIN FT	9.8	2.9	6.4		3.3	9.3			7.0					38.7	13.4	113.6		127.0
CONST DRAINAGE STRUCTURE DES J	LIN FT											16.8			16.8			16.8	16.8
CONST DRAINAGE STRUCTURE DES SD-48	LIN FT	4.5	3.6	32.7		10.6									51.4	14.8	271.2		286.0
CONST DRAINAGE STRUCTURE DES 48-4020	LIN FT	48.3		4.2		4.2									56.7	4.7	159.9		164.6
CONST DRAINAGE STRUCTURE DES 54-4020	LIN FT			5.7	13.4										19.1		140.6		140.6
CONST DRAINAGE STRUCTURE DES 60-4020	LIN FT				22.6										22.6		62.1		62.1
CONST DRAINAGE STRUCTURE DES 66-4020	LIN FT	5.0			19.5			7.4						9.0	40.9		75.8	9.0	84.8
CONST DRAINAGE STRUCTURE DES 72-4020	LIN FT																35.6		35.6
CONST DRAINAGE STRUCTURE DES 78-4020	LIN FT																15.7		15.7
CONST DRAINAGE STRUCTURE DES 84-4020	LIN FT		9.1		7.2	5.7		7.4							29.4		47.4		47.4
CONST DRAINAGE STRUCTURE DES 90-4020	LIN FT		10.2												10.2		20.0		20.0
CONST DRAINAGE STRUCTURE DES 96-4020	LIN FT					8.2									8.2		8.2		8.2
CONST DRAINAGE STRUCTURE DES 102-4020	LIN FT				6.9						16.6				23.5		6.9	16.6	23.5
CONST DRAINAGE STRUCTURE DES 108-4020	LIN FT																4.2		4.2
CONST DRAINAGE STRUCTURE DES 120-4020	LIN FT		7.6									23.3			30.9		21.0	23.3	44.3
CONST DRAINAGE STRUCTURE DES SPECIAL	LIN FT		14.9	4.2		8.2		9.8	14.4	18.1	30.8				100.4		134.1	30.8	164.9
CONST DRAINAGE STRUCTURE DES SPECIAL 1	LIN FT				11.8		14.2	20.1	36.1		7.4				89.6		115.0	7.4	122.4
CONST DRAINAGE STRUCTURE DES SPECIAL 2	EACH												1		1			1	1
CONST DRAINAGE STRUCTURE DES SPECIAL 3	EACH												1		1			1	1
CONST DRAINAGE STRUCTURE DES SPECIAL 4	EACH												1		1			1	1
CONST DRAINAGE STRUCTURE DES SPECIAL 5	EACH												1		1			1	1
CONST DRAINAGE STRUCTURE DES SPECIAL 6	EACH												1		1			1	1
CONST DRAINAGE STRUCTURE DES SPECIAL 7	EACH												1		1			1	1
CONST DRAINAGE STRUCTURE DES SPECIAL 8	EACH											1			1			1	1
CONST DRAINAGE STRUCTURE DES SPECIAL 9	EACH											1			1			1	1
CONST DRAINAGE STRUCTURE DES SPECIAL 11	EACH												1		1			1	1
CONST DRAINAGE STRUCTURE DES SPECIAL 12	EACH												1		1			1	1
CASTING ASSEMBLY	EACH	11	9	14	11	12	6	10	11	12	13	2		1	112	15	263	16	294

CASTING KEY & SUMMARY

ASS'Y.	ASS'Y. REQ'D.	CASTING NUMBER	STANDARD PLATE
A-7D	13	RING CASTING NO. 700-7 COVER CASTING 715	4101 4110
B-9	106	FRAME CASTING NO. 805 GRATE CASTING NO. 816	4132 4154
D-4	29	FRAME CASTING NO. 805 GRATE CASTING NO. 816	4132 4154
M-11	36	FRAME AND GRATE CASTING NO. 731	4143
R-3067V	91	④	
R-1642 WITH B LID	19	⑤	

① 100% STATE QUANTITY TOTALS
② INTERCHANGE QUANTITY TOTALS
③ SP 179-020-031 QUANTITY TOTALS
④ FOR DETAILS, SEE SHEET NO. 421.
⑤ FOR DETAILS, SEE SHEET NO. 421.

S.P. 179-020-031 S.P. 019-605-028

DRAINAGE STRUCTURE SUMMARY

DRAWN BY: CT | CHECKED BY: HS | CERTIFIED BY _____ LICENSED PROFESSIONAL ENGINEER LIC. NO. 18520 DATE 7/26/12

STATE PROJ. NO. 1901-148 (T.H. 13) SHEET NO. 411 OF 442 SHEETS

PLOTTED/REVISED: 26-JUL-2012 15:35
DISTRICT #: METRO
IPLOT NAME: d190l148_strctsum2
PATH & FILENAME: Projects/DM_ROS/013/1901/148/Design/d190l148_dpt.dgn

TEMPORARY DRAINAGE TABULATION

FF

STRUCTURE NO. FLOWS FROM	STRUCTURE NO. FLOWS TO	STRUCTURE LOCATION ALIGN.	STRUCTURE LOCATION STATION	STRUCTURE LOCATION OFFSET	DRAINAGE STRUCTURES TYPE	PAY HEIGHT H LIN FT	PAY HEIGHT F LIN FT	PAY HEIGHT J LIN FT	CASTING ASSEMBLY TYPE (1)	STEPS REQ'D	TOP OF CASTING ELEV (8)	OUTLET ELEV.	INLET ELEV. (2)	18" CP PIPE SEWER LIN FT	PIPE SLOPE	REPAIR STORM SEWER EACH	APRON EACH	APRON TYPE	GUIDE POST TYPE B EACH	REMARKS
5500	5502	13EB	664+24.92	37.1' LT	APR							731.45	728.47	80	3.73%		1	18" GS APRON	1	(3)
5501	5502	13EB	665+42.97	46.2' LT	CB	3.7			M - 11		730.96	727.29	726.55	39	2.0%					(7)
5502		13EB	665+04.01	46.5' LT	MH		7.1		A - 7D		732.68	725.60								(4)
5504	6501	13EB	720+65.85	34.5' LT	APR							820.46	816.22	49	8.69%		1	18" GS APRON	1	(3)(5)
5505	5019	13EB	709+30.57	37.1' LT	CB			12.3	M - 11		802.46	789.47				1				(6)
5506	5120	13EB	699+56.80	40.6' LT	CB		22.5		M - 11		789.87	767.36				1				(6)
6501		13EB	720+17.46	33.7' LT	CB						819.39	815.74								INP CB
INTERCHANGE QUANTITY TOTALS						3.7	29.6	12.3						168		2	2		2	

NOTE: STA. AND OFFSET IS AT
- CENTER OF STRUCTURE UNLESS NOTED OTHERWISE.
- END OF CS SAFETY APRON
- END OF BARREL, CS PIPE

INLET AND OUTLET ELEVATIONS ON TABULATION ARE AT EDGE OF STRUCTURE.

ALL CASTINGS ARE TO BE REUSED ON PERMANENT DRAINAGE STRUCTURES THROUGHOUT THE PROJECT.
REMOVING CASTINGS, TEMPORARY DRAINAGE STRUCTURES AND PIPES IS INCIDENTAL.

(1) FOR CASTING ASSEMBLY KEY & SUMMARY, SEE SHEET NO. 411.
(2) INLET ELEVATION AT DOWN-STREAM STRUCTURE.
(3) PROVIDE A SAFETY GRATE. SEE DETAIL, THIS SHEET.
(4) CONSTRUCT OVER EXISTING STORM SEWER PIPE - INCIDENTAL.
(5) CONNECT INTO EXISTING DRAINAGE STRUCTURE.
(6) STRUCTURE IS TO BE REMOVED AND PIPE REPAIRED AFTER CONSTRUCTION OF TH13.
(7) STRUCTURE IS TO BE REMOVED DURING RECONSTRUCTION OF TH13 MEDIAN.
(8) TOP OF CASTING ELEVATIONS ARE APPROXIMATE AND SHOULD BE FIELD VERIFIED PRIOR TO INSTALLATION.

18" CS SAFETY APRON & GRATE DESIGN 3128

(MODIFIED TO 1:10 SLOPE)

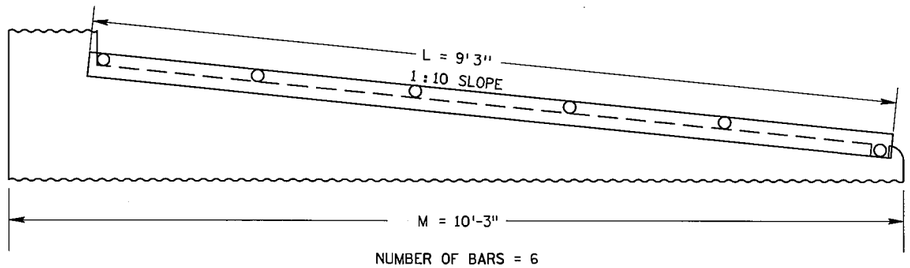

NUMBER OF BARS = 6
DIA. OF BARS = 1-1/2"
NUMBER OF GRATE SECTIONS = 2
SEE STANDARD PLATE 3128 FOR OTHER DETAILS

REVISED JAN. 11, 2000

TEMPORARY DRAINAGE
18" CS SAFETY APRON & GRATE DESIGN 3128

S.P. 179-020-031 S.P. 019-605-028

TEMPORARY DRAINAGE

DRAWN BY: CT | CHECKED BY: HS | CERTIFIED BY Scott Carlson LICENSED PROFESSIONAL ENGINEER | LIC. NO. 23344 DATE 6/18/12 | STATE PROJ. NO. 1901-148 (T.H. 13) | SHEET NO. 412 OF 442 SHEETS

PLOTTED/REVISED: 13-JUN-2012 10:33
DISTRICT #: METRO
IPLOT NAME: d1901148_tmpdrn
PATH & FILENAME:

PLOTTED/REVISED: 13-JUN-2012 10:41
DISTRICT #: METRO
IPLOT NAME: d190l148_ddl_l
FILENAME: Projects/DM_ROS/013/190l/148/Design/PlanSheets/Details/d190l148_ddl.dgn

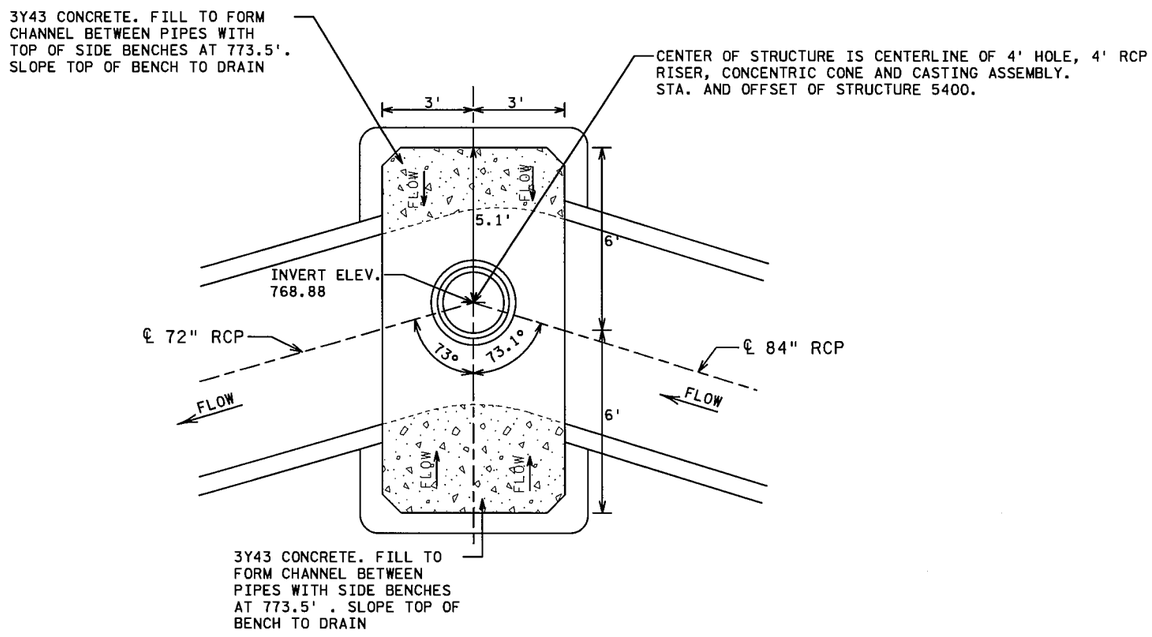

PLAN VIEW

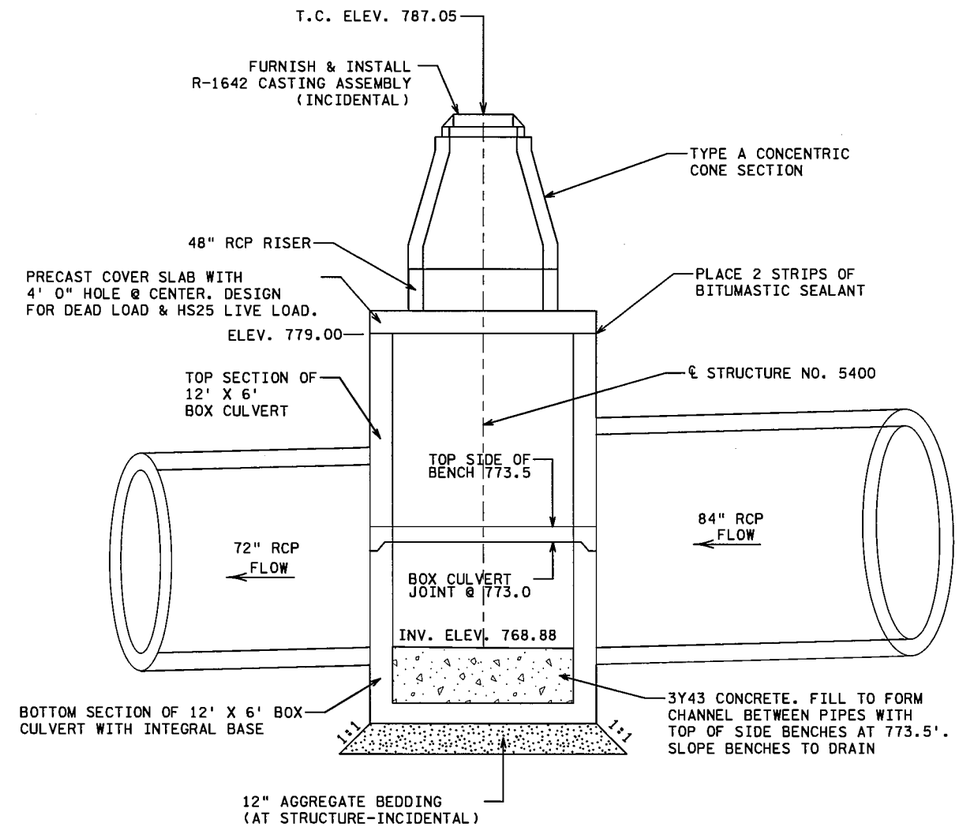

PROFILE VIEW

DESIGN SPECIAL 9 (STRUCTURE NO. 5400)

NOT TO SCALE

CONSTRUCTION NOTES

1. STRUCTURE TO BE CONSTRUCTED AS PER Mn/DOT SPEC. 2412 EXCEPT AS NOTED.
2. JOINTS SHALL BE SEALED PER ASTM C-990 WITH BUTYL JOINT SEALANT.

BASIS OF DESIGN	
DESIGNED IN ACCORDANCE WITH AASHTO "STANDARD SPECIFICATIONS FOR HIGHWAY BRIDGES", 2002 AND Mn/DOT BRIDGE DESIGN MANUAL.	LATERAL PRESSURE: 30 P.S.F./FT. MINIMUM 60 P.S.F./FT. MAXIMUM
WEIGHT OF SOIL - 130 P.C.F.	HS 25 LIVE LOAD.
CONCRETE STRENGTH - 5000 P.S.I. MINIMUM	1-1/2" MINIMUM AND 2" MAXIMUM CONCRETE COVER TO REINFORCEMENT.
STEEL REINFORCEMENT YIELD STRENGTH - 65,000 P.S.I.	

DESIGN SPECIAL 9

S.P. 179-020-031 S.P. 019-605-028

DRAINAGE DETAILS

DRAWN BY: RN	CHECKED BY: EK	CERTIFIED BY Scott Carlton LICENSED PROFESSIONAL ENGINEER LIC. NO. 23344 DATE 6/18/12	STATE PROJ. NO. 1901-148 (T.H. 13) SHEET NO. 413 OF 442 SHEETS

PLOTTED/REVISED: 13-JUN-2012 10:37
DISTRICT #: METRO
IPLOT NAME: d190148_ddl_2
FILENAME: Projects/DM_ROS/013/1901/148/Design/PlanSheets/Details/d190148_ddl.dgn

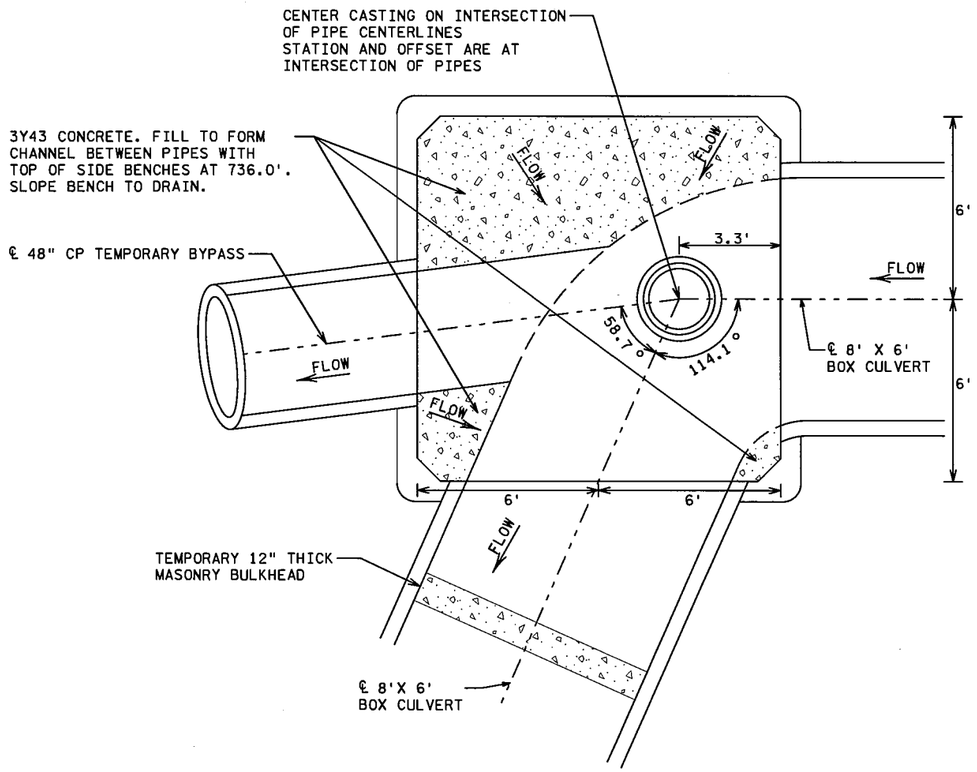

PLAN VIEW

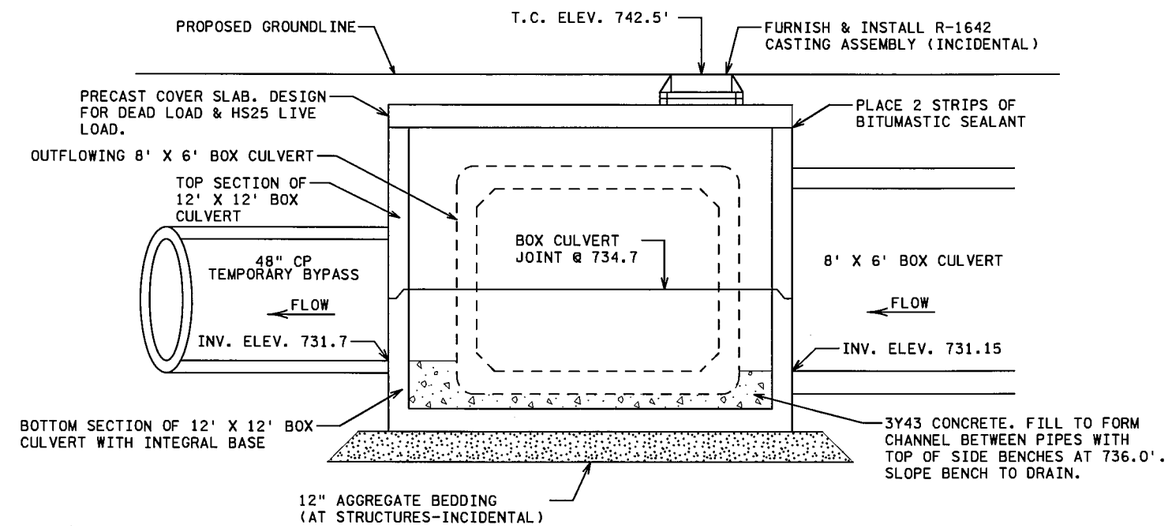

PROFILE VIEW

DESIGN SPECIAL 11 (STRUCTURE NO. 5416)

NOT TO SCALE

BASIS OF DESIGN

DESIGNED IN ACCORDANCE WITH AASHTO "STANDARD SPECIFICATIONS FOR HIGHWAY BRIDGES", 2002 AND Mn/DOT BRIDGE DESIGN MANUAL.

WEIGHT OF SOIL - 130 P.C.F.

CONCRETE STRENGTH - 5000 P.S.I. MINIMUM

STEEL REINFORCEMENT YIELD STRENGTH - 65,000 P.S.I.

LATERAL PRESSURE:
30 P.S.F./FT. MINIMUM
60 P.S.F./FT. MAXIMUM

HS 25 LIVE LOAD.

1-1/2" MINIMUM AND 2" MAXIMUM CONCRETE COVER TO REINFORCEMENT.

CONSTRUCTION NOTES

1. STRUCTURE TO BE CONSTRUCTED AS PER Mn/DOT SPEC. 2412 EXCEPT AS NOTED.
2. JOINTS SHALL BE SEALED PER ASTM C-990 WITH BUTYL JOINT SEALANT.

DESIGN SPECIAL 11

S.P. 179-020-031 S.P. 019-605-028

DRAINAGE DETAILS

DRAWN BY: RN	CHECKED BY: EK	CERTIFIED BY Scott Carlstrom LICENSED PROFESSIONAL ENGINEER LIC. NO. 23344 DATE 6/18/12	STATE PROJ. NO. 1901-148 (T.H. 13) SHEET NO. 414 OF 442 SHEETS

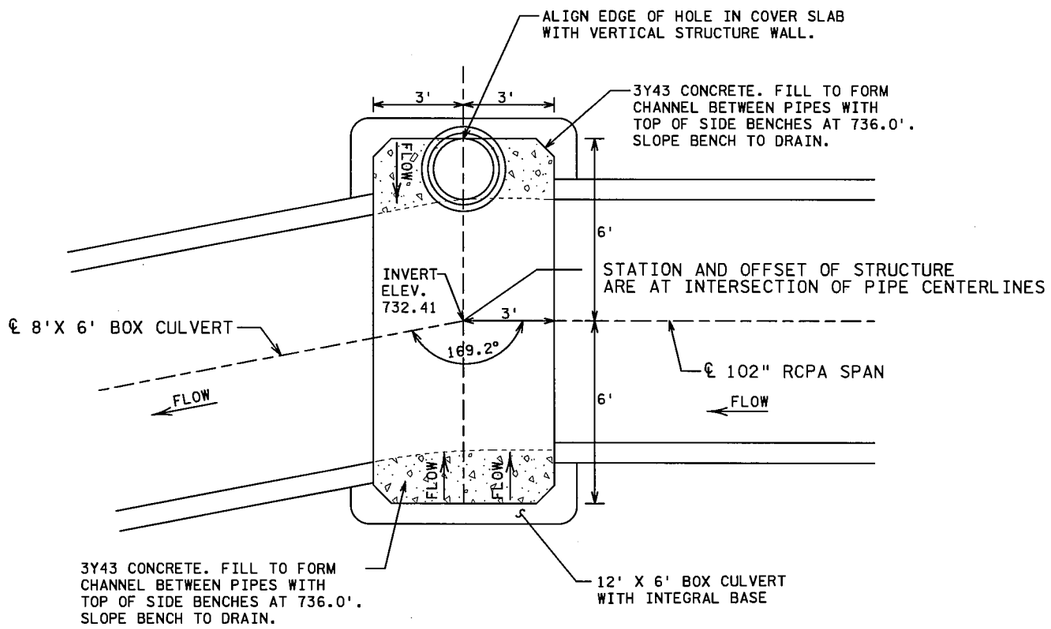

PLAN VIEW

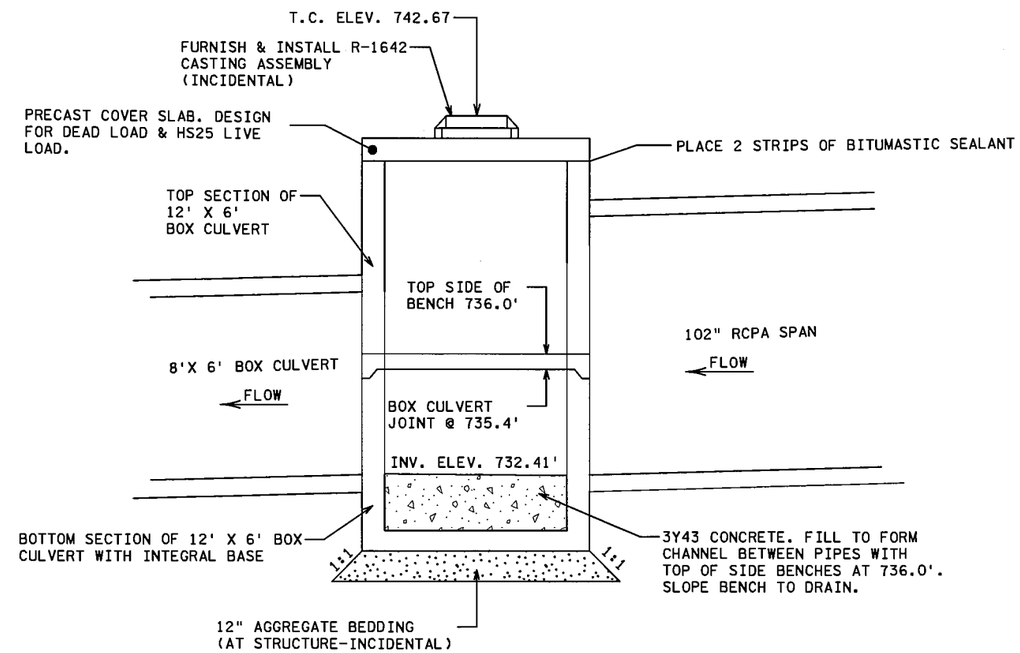

PROFILE VIEW

DESIGN SPECIAL 6 (STRUCTURE NO. 5410)

NOT TO SCALE

CONSTRUCTION NOTES

1. STRUCTURE TO BE CONSTRUCTED AS PER Mn/DOT SPEC. 2412 EXCEPT AS NOTED.
2. JOINTS SHALL BE SEALED PER ASTM C-990 WITH BUTYL JOINT SEALANT.
3. STA. AND OFFSET OF STRUCTURE 5410 ARE AT INTERSECTION OF PIPE CENTERLINES.

BASIS OF DESIGN

DESIGNED IN ACCORDANCE WITH AASHTO "STANDARD SPECIFICATIONS FOR HIGHWAY BRIDGES", 2002 AND Mn/DOT BRIDGE DESIGN MANUAL.

WEIGHT OF SOIL - 130 P.C.F.

CONCRETE STRENGTH - 5000 P.S.I. MINIMUM

STEEL REINFORCEMENT YIELD STRENGTH - 65,000 P.S.I.

LATERAL PRESSURE:
30 P.S.F./FT. MINIMUM
60 P.S.F./FT. MAXIMUM

HS 25 LIVE LOAD.

1-1/2" MINIMUM AND 2" MAXIMUM CONCRETE COVER TO REINFORCEMENT.

DESIGN SPECIAL 6

S.P. 179-020-031 S.P. 019-605-028

DRAINAGE DETAILS

DRAWN BY: RN | CHECKED BY: EK | CERTIFIED BY _____ LICENSED PROFESSIONAL ENGINEER | LIC. NO. 23344 DATE 6/18/12

STATE PROJ. NO. 1901-148 (T.H. 13) SHEET NO. 415 OF 442 SHEETS

PLOTTED/REVISED: 13-JUN-2012 10:37
DISTRICT #: METRO
IPLOT NAME: d1901148_ddl_3
FILENAME: Projects/DM_ROS/013/1901/148/Design/PlanSheets/Details/d1901148_ddl.dgn

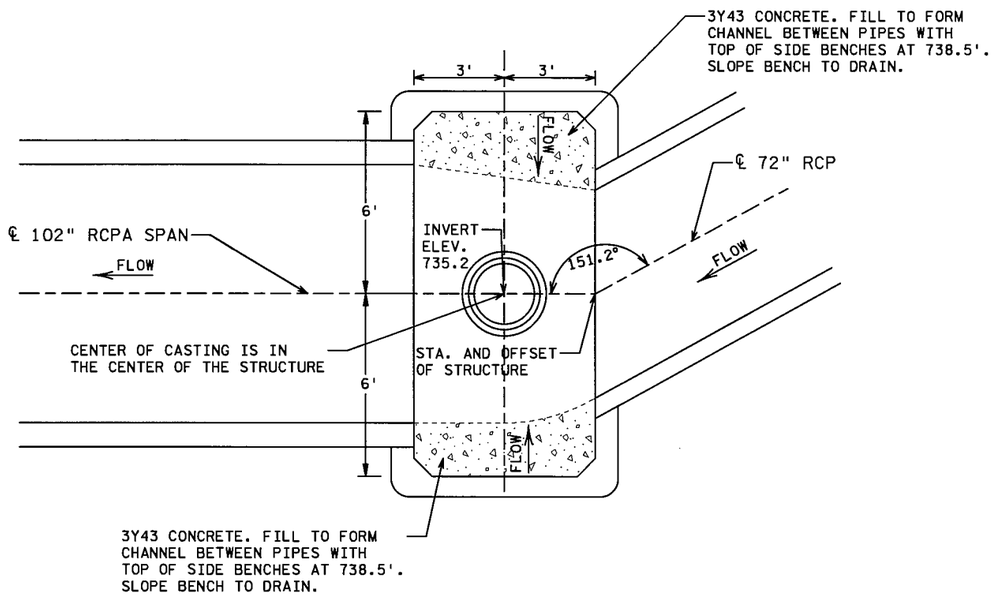

PLAN VIEW

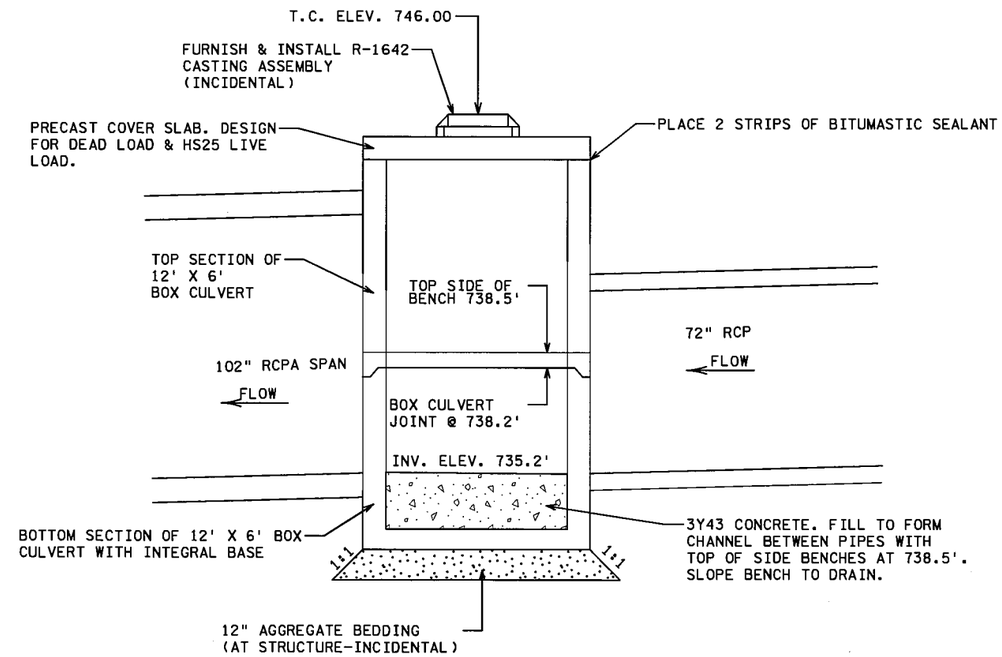

PROFILE VIEW

DESIGN SPECIAL 7 (STRUCTURE NO. 5409)

NOT TO SCALE

BASIS OF DESIGN	
DESIGNED IN ACCORDANCE WITH AASHTO "STANDARD SPECIFICATIONS FOR HIGHWAY BRIDGES", 2002 AND Mn/DOT BRIDGE DESIGN MANUAL.	LATERAL PRESSURE: 30 P.S.F./FT. MINIMUM 60 P.S.F./FT. MAXIMUM
WEIGHT OF SOIL - 130 P.C.F.	HS 25 LIVE LOAD.
CONCRETE STRENGTH - 5000 P.S.I. MINIMUM	1-1/2" MINIMUM AND 2" MAXIMUM CONCRETE COVER TO REINFORCEMENT.
STEEL REINFORCEMENT YIELD STRENGTH - 65,000 P.S.I.	

CONSTRUCTION NOTES

1. STRUCTURE TO BE CONSTRUCTED AS PER Mn/DOT SPEC. 2412 EXCEPT AS NOTED.
2. JOINTS SHALL BE SEALED PER ASTM C-990 WITH BUTYL JOINT SEALANT.

DESIGN SPECIAL 7

S.P. 179-020-031 S.P. 019-605-028

DRAINAGE DETAILS

DRAWN BY: RN | CHECKED BY: EK | CERTIFIED BY Scott Carlt LICENSED PROFESSIONAL ENGINEER | LIC. NO. 23344 DATE 6/18/12

STATE PROJ. NO. 1901-148 (T.H. 13) SHEET NO. 416 OF 442 SHEETS

PLOTTED/REVISED: 13-JUN-2012 10:37
DISTRICT #: METRO
IPLOT NAME: d1901148_dd1_4
FILENAME: Projects/DM_ROS/013/1901/148/Design/PlanSheets/Details/d1901148_dd1.dgn

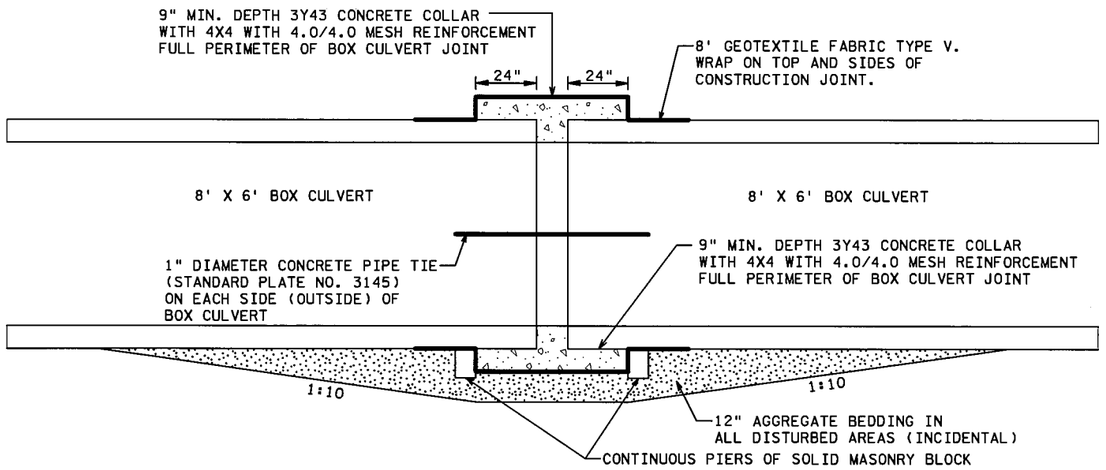

PROFILE VIEW

CONSTRUCTION JOINT FOR BOX CULVERTS

NOT TO SCALE

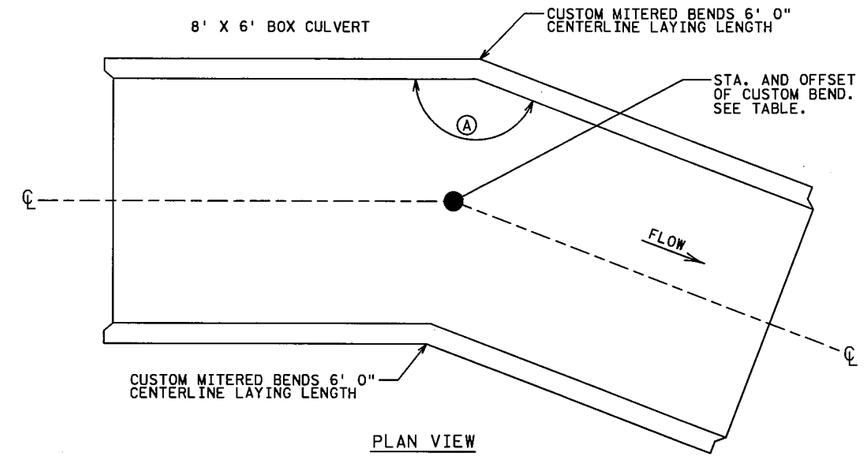

PLAN VIEW

STRUCTURE NO.	STRUCTURE	STATION	OFFSET	Ⓐ
		126CON		
5414	DESIGN SPECIAL 2	18+56.4	19.3' RT	159.1°
5413	DESIGN SPECIAL 3	17+68.2	19.3' RT	164.7°
5412	DESIGN SPECIAL 4	16+97.5	19.4' RT	168.8°

8'X 6' BOX CULVERT CUSTOM MITERED BEND DETAIL

NOT TO SCALE

CONCRETE SADDLE AT MCES SANITARY SEWER CROSSING

NOT TO SCALE

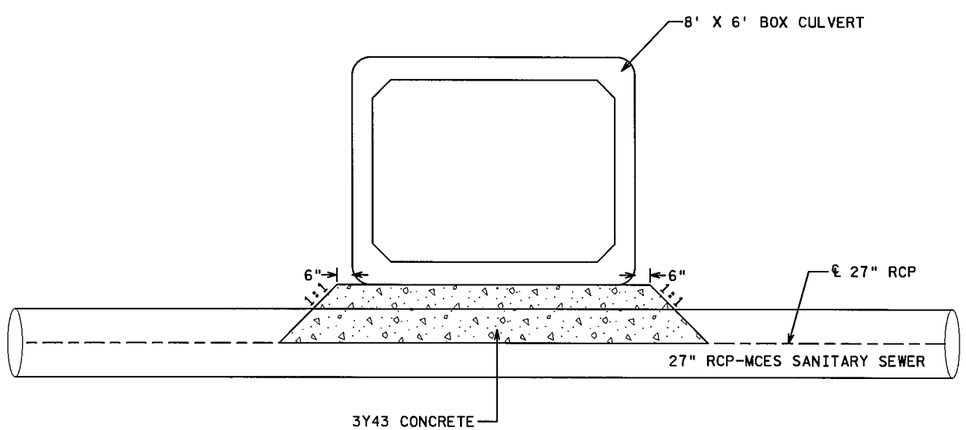

SECTION A-A

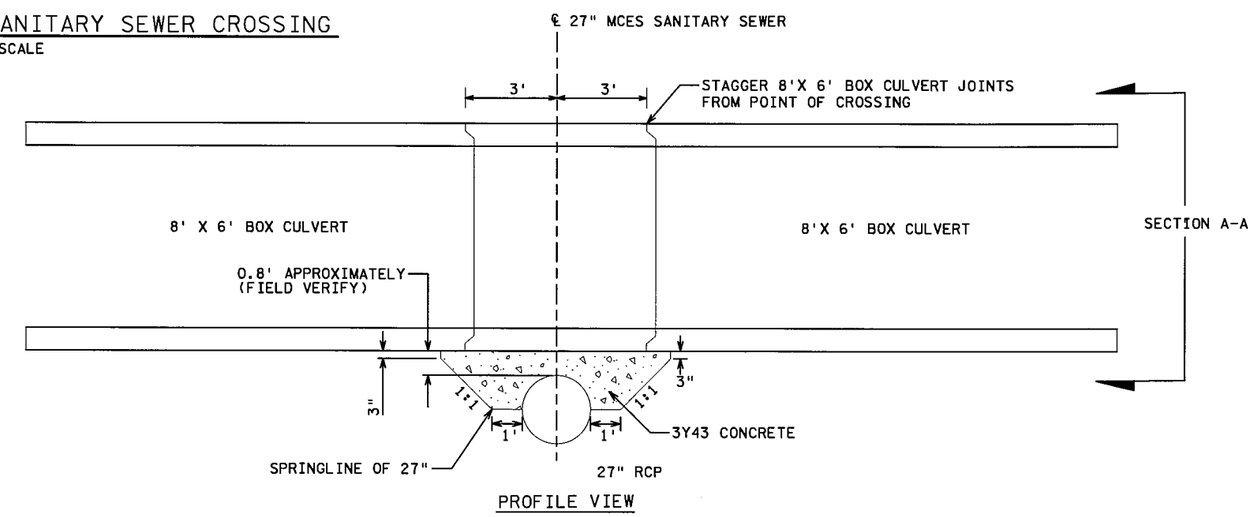

PROFILE VIEW

CONSTRUCTION NOTES

1. MODIFY CONCRETE SADDLE AS DIRECTED BY MCES REPRESENTATIVE.

DESIGN SPECIAL 10

DESIGN SPECIAL 2, 3, 4 & 10
CONSTRUCTION JOINT FOR BOX CULVERTS

S.P. 179-020-031 S.P. 019-605-028

5 OF 15

DRAINAGE DETAILS

DRAWN BY: RN	CHECKED BY: EK	CERTIFIED BY Scott Carlyle LICENSED PROFESSIONAL ENGINEER LIC. NO. 23344 DATE 6/18/12	STATE PROJ. NO. 1901-148 (T.H. 13) SHEET NO. 417 OF 442 SHEETS

PLOTTED/REVISED: 13-JUN-2012 10:37
DISTRICT #: METRO
IPLOT NAME: d1901148_ddl_5
FILENAME: Projects/DM_ROS/013/1901/148/Design/PlanSheets/Details/d1901148_ddl.dgn

PLOTTED/REVISED: 13-JUN-2012 10:37
DISTRICT #: METRO
IPLOT NAME: d1901148_ddl_6
FILENAME: Projects/DM_ROS/013/1901/148/Design/PlanSheets/Details/d1901148_ddl.dgn

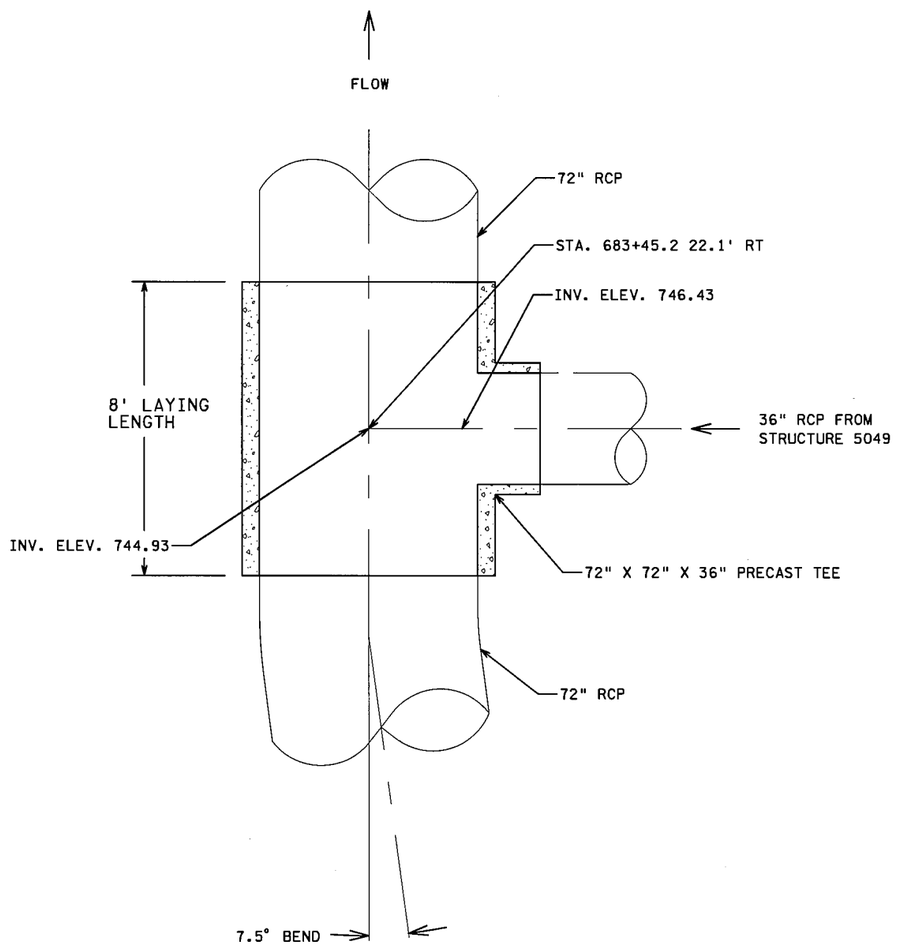

PLAN VIEW

DESIGN SPECIAL 8 (STRUCTURE NO. 5407)

NOT TO SCALE

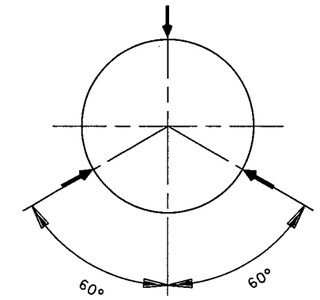

NOTES:

① PIPE TIES TO BE USED FOR 72" RCP ALONG RETAINING WALL #3. FROM STA. 58+21.59 TO STA. 52+26.2 ALONG THE SW RAMP

ROUND PIPE WITH 3 TIES

NOT TO SCALE

STRUCTURE NO.	STRUCTURE	DIA. OF PIPE	BOX INVERT Ⓐ	TAP INVERT Ⓑ	DIA. OF HOLE Ⓒ
5415	DESIGN SPECIAL 12	18" RCP	731.39	733.39	27"
5411	DESIGN SPECIAL 5	15" RCP	732.29	734.29	24"

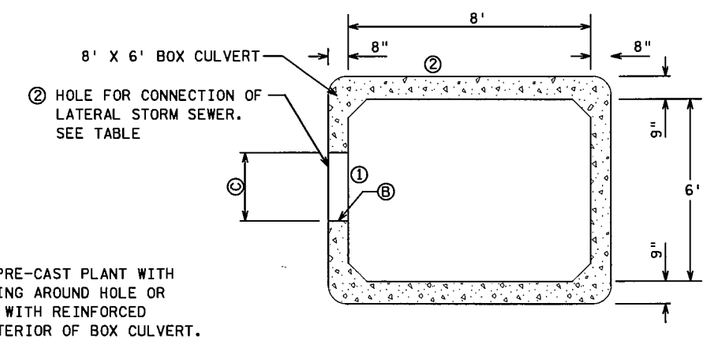

CROSS SECTION

NOTES:

① HOLE TO BE FORMED AT PRE-CAST PLANT WITH SUPPLEMENTAL REINFORCING AROUND HOLE OR CORE DRILLED IN FIELD WITH REINFORCED CONCRETE COLLAR ON EXTERIOR OF BOX CULVERT.

② ADJUST PROPOSED TAP LOCATION TO AVOID CLOSE PROXIMITY WITH BOX CULVERT JOINT.

DESIGN SPECIAL 12 & 5 (STRUCTURE NO. 5411 & 5415)

NOT TO SCALE

DESIGN SPECIAL 5, 8, 12 AND PIPE TIE DETAIL

S.P. 179-020-031 S.P. 019-605-028

DRAINAGE DETAILS

DRAWN BY: | CHECKED BY: | CERTIFIED BY Scott Corbetta LICENSED PROFESSIONAL ENGINEER | LIC. NO. 23344 DATE 6/18/12

STATE PROJ. NO. 1901-148 (T.H. 13) SHEET NO. 418 OF 442 SHEETS

GRANULAR BEDDING FOR ARCHED PIPE				GG
STRUT TO STRUT	PIPE SIZE	LENGTH	GRANULAR BEDDING CU YDS	NOTES
INTERCHANGE QUANTITIES				
5109 TO 5110	28" SPAN	25+12=37	1.4	
5110 TO 5111	28" SPAN	65+12=77	2.9	
5111 TO 5112	28" SPAN	28+12=40	1.5	
5112 TO 5106	28" SPAN	134+12=146	5.4	
5095 TO 5408	36" SPAN	59+16=75	3.5	
5082 TO 5083	22" SPAN	300+12=312	8.7	
5083 TO 5084	28" SPAN	346+12=358	13.3	
5309 TO 5085	28" SPAN	145+12=157	5.8	
5199 TO 5201	51" SPAN	61+16=77	5	
5201 TO 5202	51" SPAN	47+16=63	4.1	
S.P. 179-020-031 QUANTITIES				
5409 TO 5410	102" SPAN	215+17=232	30	
INTERCHANGE QUANTITIES TOTALS			51.6	
S.P. 179-020-031 QUANTITIES TOTALS			30	
PROJECT TOTALS:			81.6	

GRANULAR BEDDING FOR ARCH PIPE (2)

NOT TO SCALE

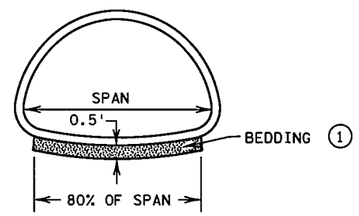

NOTES:

(1) PAID FOR UNDER ITEM NO. 2451 BEDDING. ALL EXCAVATION IS INCIDENTAL.

(2) FOR LOCATION, SEE TABULATION ON THIS SHEET.

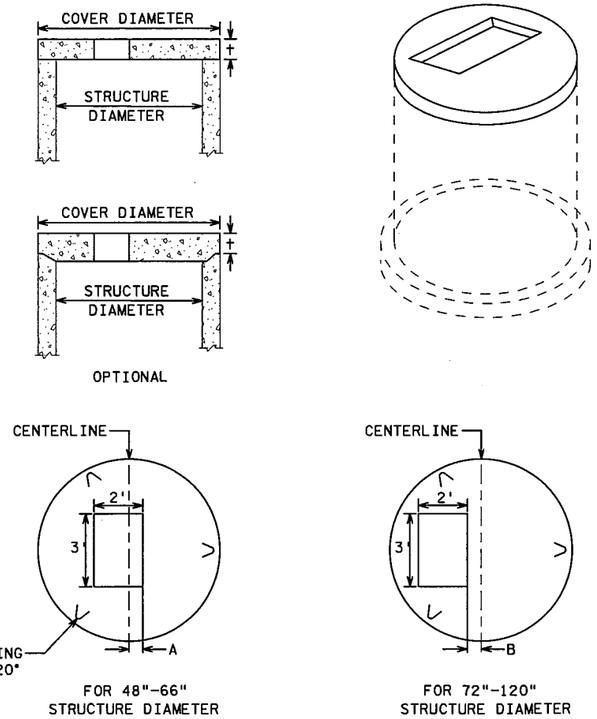

COVER TO BE USED ON 4020 STRUCTURES WITH R-3067V CASTING

MANHOLE TOP SLAB WITH OFF-SET 2' X 3' HOLE					
STRUCTURE DIAMETER	COVER DIAMETER	MINIMUM t	A	B	WEIGHT OF COVER
(IN)	(IN)	(IN)	(IN)	(IN)	(LBS)
48	58	6.0	9.0		930
54	65	8.0	6.0		1710
60	72	8.0	3.0		2230
66	79	8.0	0.0		2810
72	86	8.0		3.0	3440
78	93	8.0		6.0	4120
84	100	8.0		9.0	4860
90	108	8.0		12.0	5760
96	114	8.0		15.0	6490
102	120	8.0		18.0	7260
108	126	12.0		21.0	12100
120	144	12.0		24.0	16100

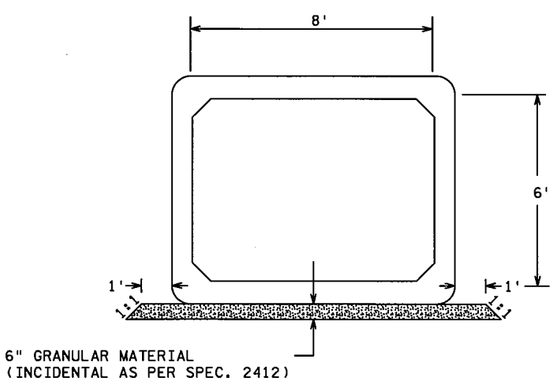

GRANULAR BEDDING FOR BOX CULVERT RUN

NOT TO SCALE

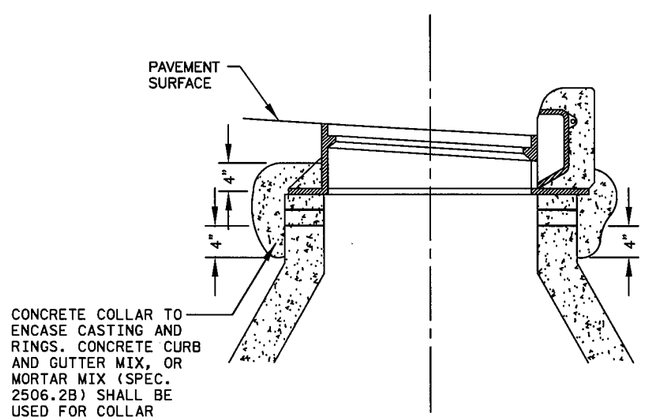

CONCRETE ENCASED CASTING

GRANULAR BEDDING FOR BOX CULVERT RUN, GRANULAR BEDDING FOR ARCH PIPE, REINFORCED CONCRETE MANHOLE TOP SLAB, CONCRETE ENCASED CASTING

S.P. 179-020-031 S.P. 019-605-028

DRAINAGE DETAILS

DRAWN BY: RN | CHECKED BY: EK | CERTIFIED BY Scott Cashman LICENSED PROFESSIONAL ENGINEER | LIC. NO. 23344 DATE 6/18/12

STATE PROJ. NO. 1901-148 (T.H. 13) SHEET NO. 419 OF 442 SHEETS

DISTRICT #: METRO
IPLOT NAME: d1901148_ddl_7
FILENAME: Projects/DM_ROS/013/1901/148/Design/PlanSheets/Details/d1901148_ddl.dgn
PLOTTED/REVISED: 13-JUN-2012 10:37

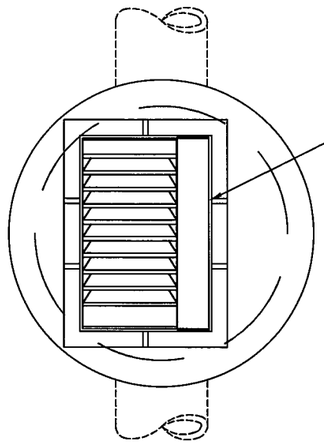

2' x 3' SLAB OPENING

DIMENSION FROM BACK OF CURB
TO CENTER OF PIPE
4' DIA. MH = 9" IN FROM BACK OF CURB
5' DIA. MH = 3" IN FROM BACK OF CURB
6' DIA. MH = 3" BEHIND BACK OF CURB
7' DIA. MH = 9" BEHIND BACK OF CURB
8' DIA. MH = 15" BEHIND BACK OF CURB

PLAN

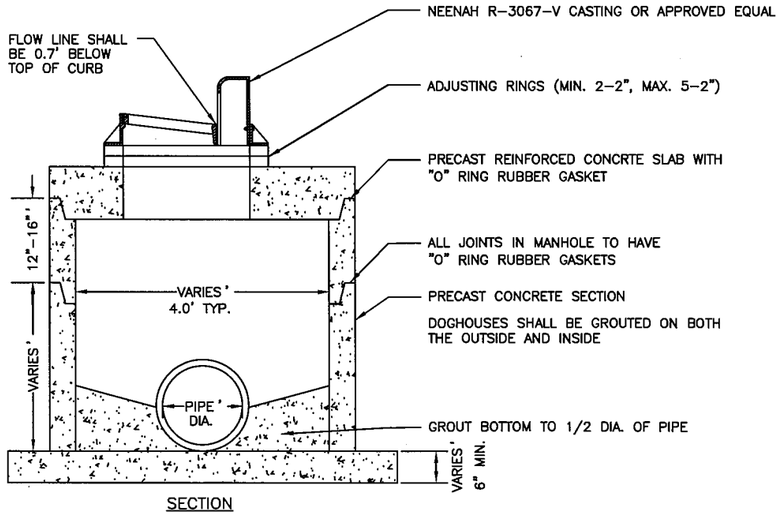

SECTION

CATCH BASIN WITH CIRCULAR MANHOLE

DESIGN SPECIAL 1

(MEASURED BY LINEAR FOOT)

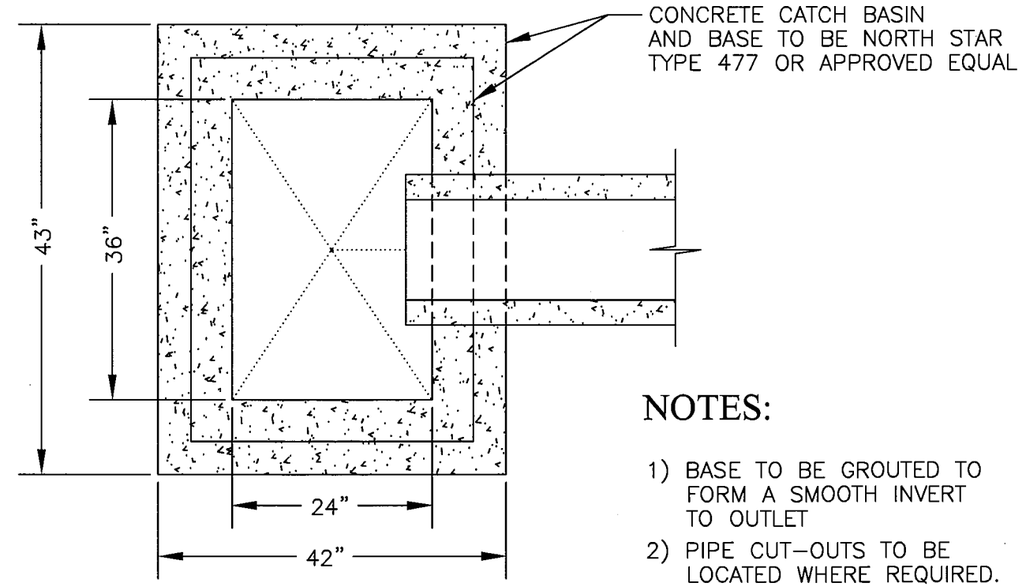

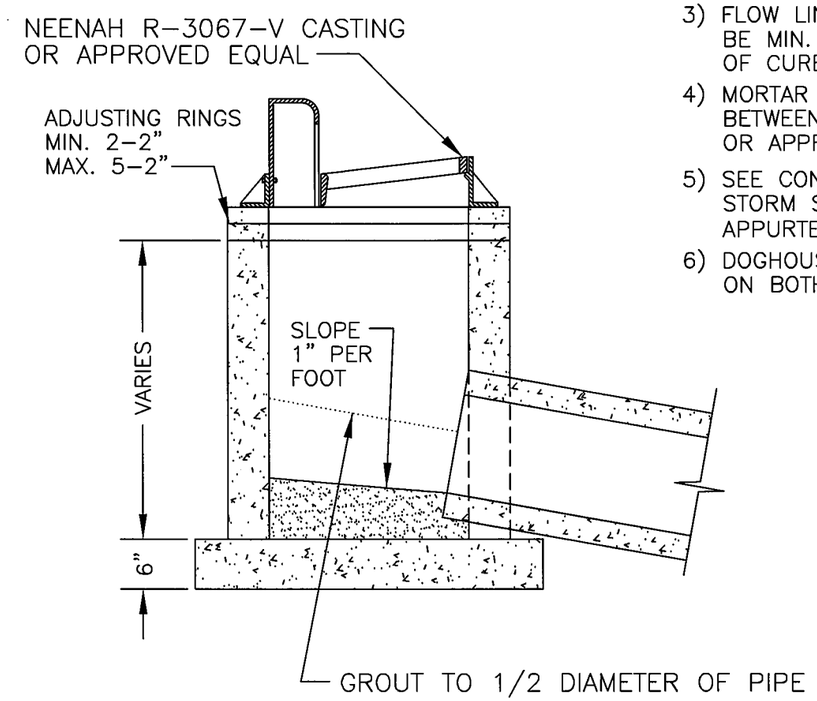

NOTES:

1) BASE TO BE GROUTED TO FORM A SMOOTH INVERT TO OUTLET
2) PIPE CUT-OUTS TO BE LOCATED WHERE REQUIRED.
3) FLOW LINE OF GRATE SHALL BE MIN. 0.7' BELOW TOP OF CURB
4) MORTAR SHALL BE USED BETWEEN ADJUSTING RINGS OR APPROVED EQUAL.
5) SEE CONCRETE SPEC. ITEM STORM SEWERS AND APPURTENANCES
6) DOGHOUSE SHALL BE GROUTED ON BOTH THE INSIDE AND OUTSIDE

STANDARD CATCH BASIN

DESIGN SPECIAL

(MEASURED BY LINEAR FOOT)

S.P. 179-020-031 S.P. 019-605-028

DRAINAGE DETAILS

DRAWN BY: RN	CHECKED BY: EK	CERTIFIED BY Scott Carlat LICENSED PROFESSIONAL ENGINEER LIC. NO. 23344 DATE 6/18/12	STATE PROJ. NO. 1901-148 (T.H. 13) SHEET NO. 420 OF 442 SHEETS

PLOTTED/REVISED: 13-JUN-2012 10:37
DISTRICT #: METRO
IPLOT NAME: d190l148_ddl_8
FILENAME: Projects/DM_ROS/013/1901/148/Design/PlanSheets/Details/d190l148_ddl.dgn

NOTES:
MANHOLE FRAME SHALL BE NEENAH R-1642 WITH TYPE "B" LID AND CONCEALED PICKHOLE OR APPROVED EQUAL.

LETTERING ON LID SHALL CORRESPOND TO MANHOLE UTILITY.

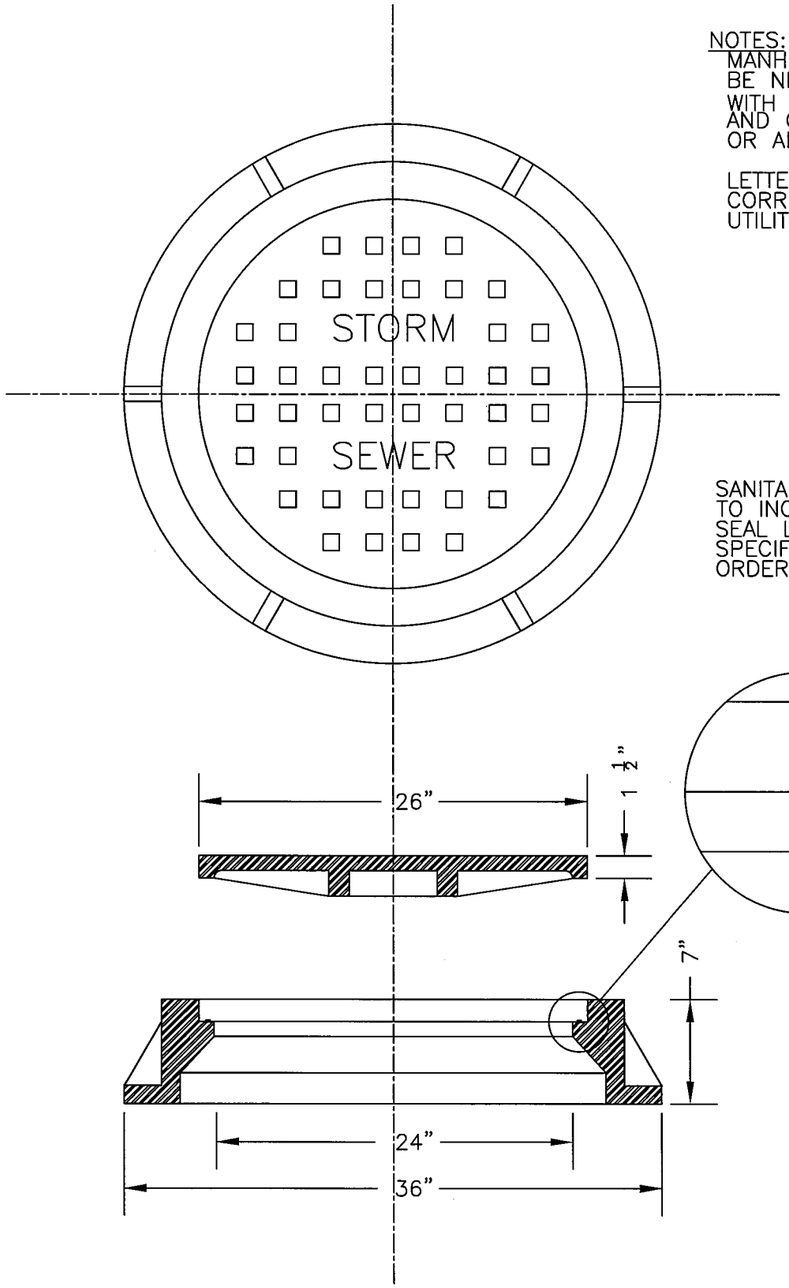

SANITARY MANHOLE CASTINGS TO INCLUDE NEENAH SELF-SEAL LIDS. CONTRACTOR TO SPECIFY SELF-SEAL LIDS WHEN ORDERING CASTING AND LID.

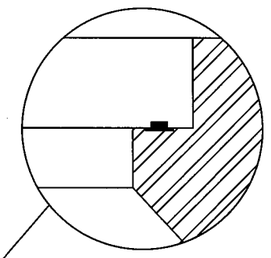

"T" SEAL GASKET DETAIL

MANHOLE CASTING AND COVER
R-1642 WITH TYPE B LID

CURB INLET FRAME AND CURB BOX SHALL BE NEENAH NO. 3067, TYPE V GRATE AND 3" CURB BOX OR APPROVED EQUAL

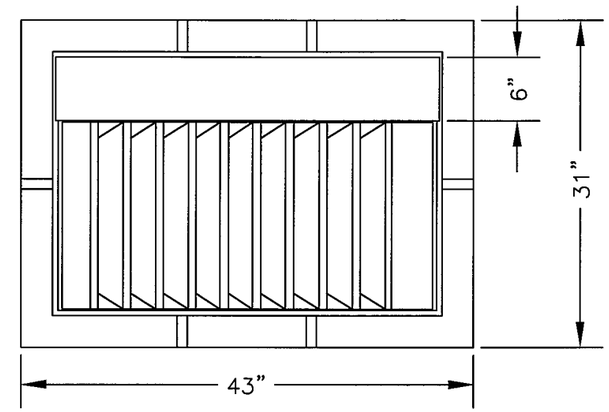

VANES IN GRATE SHALL BE POINTED TOWARDS THE MAJOR FLOW

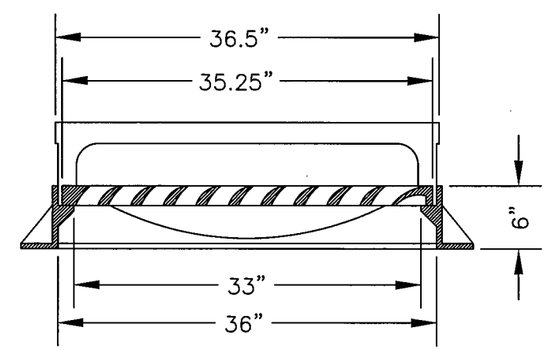

STANDARD CATCH BASIN CASTING
R-3067V

S.P. 179-020-031 S.P. 019-605-028

DRAINAGE DETAILS

DRAWN BY: RN	CHECKED BY: EK	CERTIFIED BY Scott Carlton LICENSED PROFESSIONAL ENGINEER LIC. NO. 23344 DATE 6/18/12	STATE PROJ. NO. 1901-148 (T.H. 13) SHEET NO. 421 OF 442 SHEETS

PLOTTED/REVISED: 13-JUN-2012 10:37
DISTRICT #: METRO
IPLOT NAME: d190148_ddl_9
FILENAME: Projects/DM_ROS/013/1901/148/Design/PlanSheets/Details/d190148_ddl.dgn

1. CENTER CASTING ON 27" HOLE.
2. DETAIL APPLIES TO DESIGN G, F, 4020 STRUCTURES AND DESIGN SD AT THE MEDIAN BARRIER.

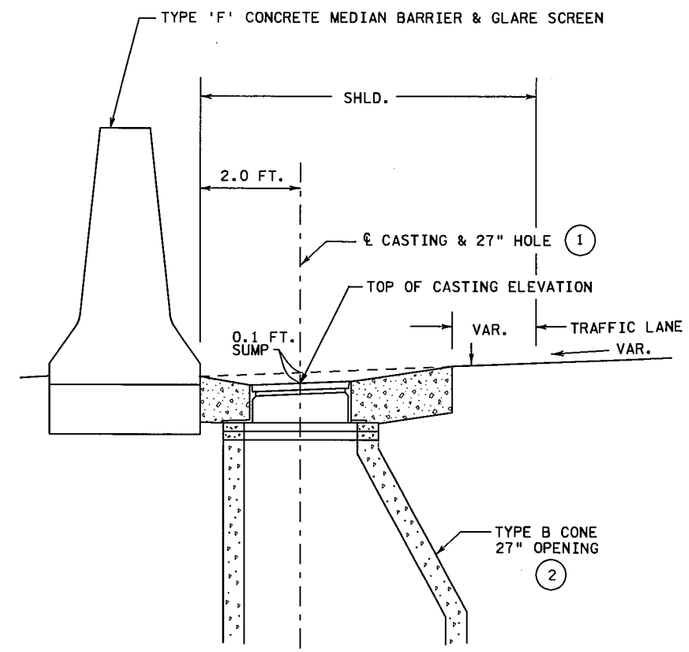

SECTION A-A
NOT TO SCALE

DRAINAGE STRUCTURE ADJACENT TO CONCRETE MEDIAN BARRIER

S.P. 179-020-031 S.P. 019-605-028

10 OF 15

DRAINAGE DETAILS

DRAWN BY: CT | CHECKED BY: HS | CERTIFIED BY Scott Coslett LICENSED PROFESSIONAL ENGINEER LIC. NO. 23344 DATE 6/18/12

STATE PROJ. NO. 1901-148 (T.H. 13) SHEET NO. 422 OF 442 SHEETS

PLOTTED/REVISED: 13-JUN-2012 10:37
DISTRICT #: METRO
IPLOT NAME: d1901148_ddl_10
FILENAME: Projects/DM_ROS/013/1901/148/Design/PlanSheets/Details/d1901148_ddl.dgn

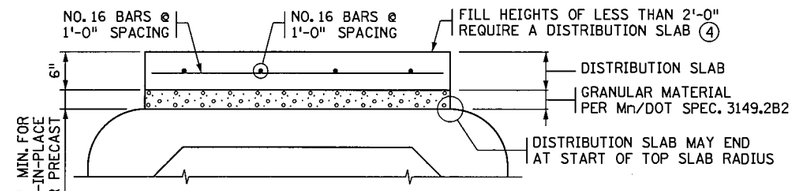

DISTRIBUTION SLAB SECTION

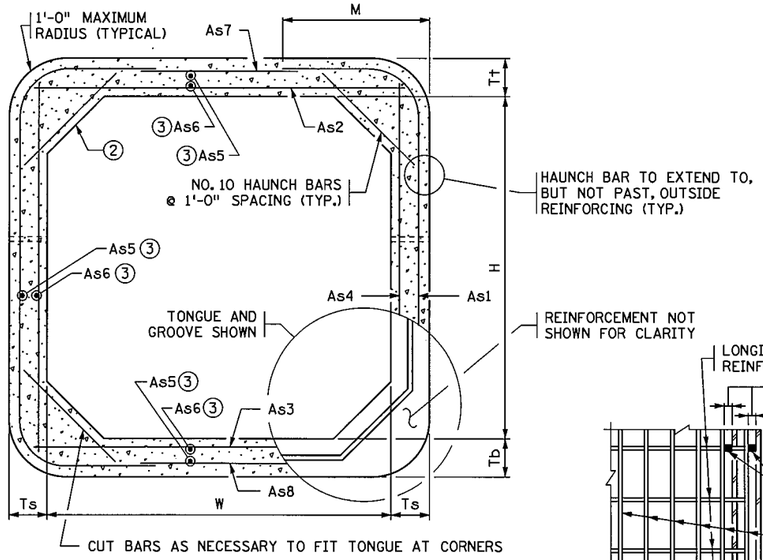

TRANSVERSE BARREL SECTION

BAR REINFORCEMENT OPTION SHOWN

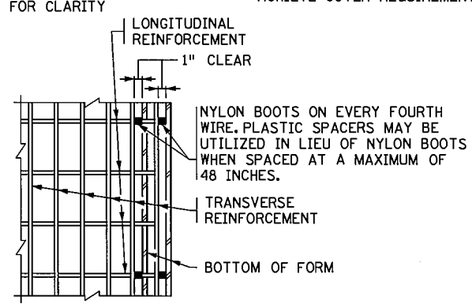

PLAN

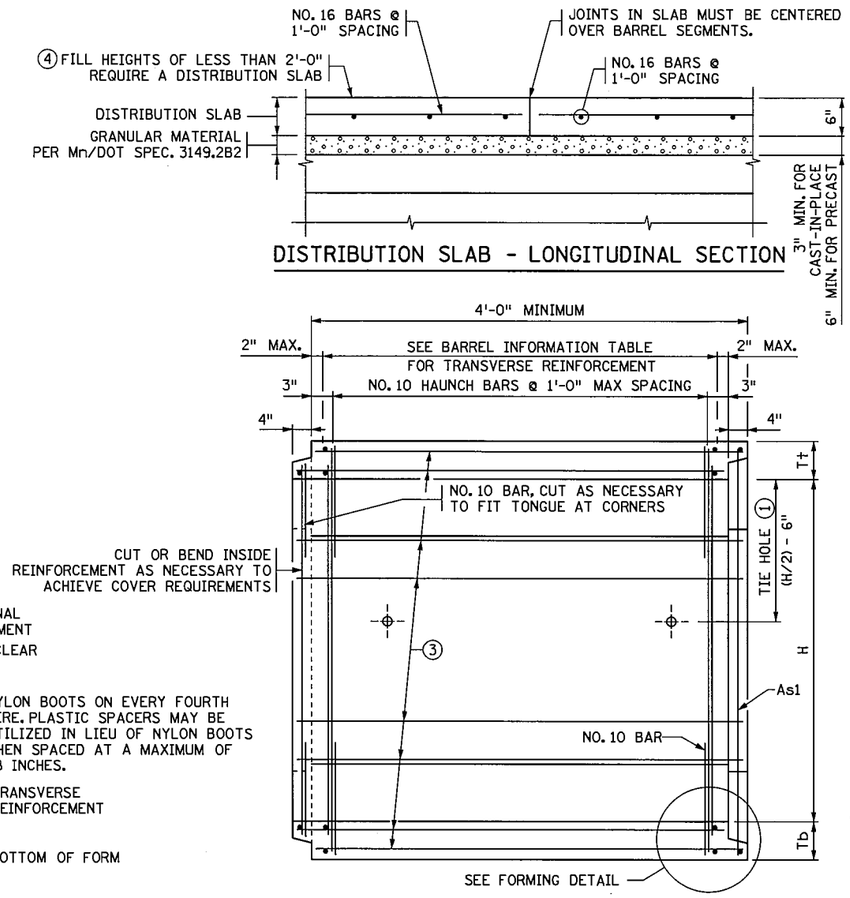

DISTRIBUTION SLAB - LONGITUDINAL SECTION

LONGITUDINAL BARREL SECTION

BAR REINFORCEMENT OPTION SHOWN

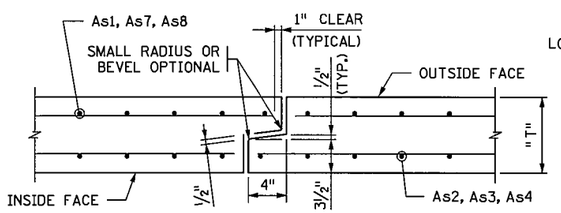

TONGUE AND GROOVE JOINT DETAIL

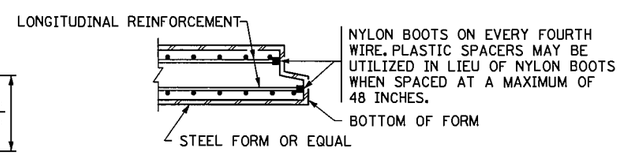

SECTION

FORMING DETAIL

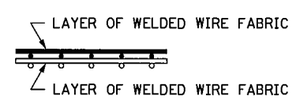

FABRIC LAYER DETAIL

WHEN MORE THAN ONE LAYER OF WELDED WIRE FABRIC IS USED TO OBTAIN THE REQUIRED REINFORCEMENT AREAS, THE WIRES OF THE WELDED WIRE FABRIC SHALL BE PLACED AS SHOWN

CONSTRUCTION NOTES

CULVERTS TO BE CONSTRUCTED AS PER Mn/DOT SPEC. 2412 EXCEPT AS NOTED.

IF THE DISTANCE BETWEEN DOUBLE BARRELS IS LESS THAN 2'-0" USE EITHER PEA ROCK OR LEAN MIX BACKFILL(Mn/DOT SPEC. 2520) BETWEEN THE CULVERTS AS APPROVED BY THE ENGINEER. IF PEA ROCK IS USED PROVIDE APPROVED GROUT SEEPAGE CUTOFF CORE, MINIMUM 12" THICK, BETWEEN THE CULVERT'S TWO ENDS. SEE STANDARD FIGURE 5-395.115 FOR DETAILS. MINIMUM DISTANCE BETWEEN THE BARRELS IS 6".

THE WELDED WIRE FABRIC, SHEAR REINFORCEMENT AND REINFORCEMENT BARS SHALL CONFORM TO APPLICABLE REQUIREMENTS OF AASHTO M259.

1½" MIN. AND 2" MAX. CONCRETE COVER ON ALL REINFORCEMENT, INCLUDING SHEAR REINFORCEMENT, EXCEPT FOR TONGUE AND GROOVE DETAIL.

ANY OF THE FOLLOWING COMBINATIONS OF STEEL REINFORCEMENT MAY BE USED:
(a) 1 OR 2 LAYERS OF WELDED WIRE FABRIC OR
(b) 1 LAYER OF WELDED WIRE FABRIC AND 1 LAYER OF REINFORCEMENT BARS OR
(c) 1 LAYER OF REINFORCEMENT BARS.
THE REINFORCEMENT SHALL BE DEVELOPED IN ACCORDANCE WITH AASHTO "LRFD BRIDGE DESIGN SPECIFICATIONS". IF BAR REINFORCEMENT IS SUBSTITUTED FOR WELDED WIRE FABRIC, THE AREAS OF REINFORCEMENT SHALL BE INCREASED BY 8%.

THE MAXIMUM SIZE OF REINFORCEMENT BARS SHALL BE NO. 19. THE MAXIMUM WELDED WIRE FABRIC SIZE SHALL BE A W23 PER LAYER (MAXIMUM OF 2 LAYERS).

THE SPACING CENTER TO CENTER OF THE TRANSVERSE WIRES SHALL NOT BE LESS THAN 2" NOR MORE THAN 4". THE SPACING CENTER TO CENTER OF THE LONGITUDINAL WIRES SHALL NOT BE MORE THAN 8".

WELDING WILL NOT BE ALLOWED ON REINFORCEMENT BARS OR WELDED WIRE FABRIC, EXCEPT THAT THE ORIGINAL WELDING REQUIRED TO MANUFACTURE WIRE FABRIC IS ACCEPTABLE.

WHEN REINFORCEMENT IS CUT, ADDITIONAL REINFORCEMENT SHALL BE ADDED ON BOTH SIDES OF THE CUT MEMBER TO REPLACE OR EXCEED THE CUT STEEL.

CONCRETE SHALL BE MIX NO. 3W36 WITH NO CALCIUM CHLORIDE ALLOWED.

SHOP DRAWING APPROVAL PER Mn/DOT SPEC. 3238.2A IS NOT REQUIRED UNLESS OPENINGS OR ATTACHMENTS ARE PLACED ON A BARREL SEGMENT.

COMPACT THE FIRST 1.5' (LOOSE) OF FILL ABOVE THE BOX WITH LIGHT COMPACTION EQUIPMENT SUCH AS PLATE COMPACTORS OR WALK BEHIND ROLLERS.

TRANSVERSE REINFORCEMENT IS PARALLEL TO THE CULVERT SPAN. LONGITUDINAL REINFORCEMENT IS PERPENDICULAR TO THE CULVERT SPAN.

① CULVERT TIES ARE TO BE 1" DIAMETER RODS. SEE STANDARD PLATE NO. 3145 FOR CONNECTION DETAILS.

② HAUNCH SIZES ARE TO BE 12" VERTICAL, 12" HORIZONTAL ON ALL BOX SIZES.

③ LONGITUDINAL REINFORCEMENT DENOTED AS As5 AND As6 MUST BE PLACED IN ALL SLABS AND WALLS AND MUST BE 0.06 SQ. IN./FT. MIN.

④ FILL HEIGHTS OF LESS THAN 2'-0" REQUIRE A DISTRIBUTION SLAB.

USE 3Y43 CONCRETE FOR THE DISTRIBUTION SLAB.

CAST-IN-PLACE DISTRIBUTION SLABS SHALL BE 6" THICK. PROVIDE 3" MINIMUM GRANULAR MATERIAL PER Mn/DOT SPEC. 3149.2B2 BETWEEN BARREL AND DISTRIBUTION SLAB.

PRECAST DISTRIBUTION SLABS SHALL BE 6" THICK AND MAY BE USED FOR FILL HEIGHTS OVER 1'-0". PROVIDE 6" MINIMUM GRANULAR MATERIAL PER Mn/DOT SPEC 3149.2B2 BETWEEN BARREL AND DISTRIBUTION SLAB.

IF DISTRIBUTION SLAB IS USED AS PAVEMENT SURFACE IT MUST BE REDESIGNED PER THE Mn/DOT PAVEMENT DESIGN MANUAL.

BARREL INFORMATION TABLE ✳✳✳

LOCATION	SIZE	CLASS	f'c (P.S.I.)	FILL HEIGHT RANGE (FT.)	DISTRUBUTION SLAB REQUIRED ✳	RECESSED TIE RODS REQUIRED ✳✳	DIMENSIONS W (FT.)	H (FT.)	T† (IN.)	Tb (IN.)	Ts (IN.)	WEIGHT (LBS./FT.)	WELDED WIRE FABRIC REINFORCEMENT As1 AREA (IN.²/FT.)	As1 LENGTH (FT.)	As1 M (FT.)	As2 AREA (IN.²/FT.)	As2 LENGTH (FT.)	As3 AREA (IN.²/FT.)	As3 LENGTH (FT.)	As4 AREA (IN.²/FT.)	As4 LENGTH (FT.)	As7 AREA (IN.²/FT.)	As7 LENGTH (FT.)	As8 AREA (IN.²/FT.)	As8 LENGTH (FT.)
FULL LENGTH	8X6	2	5000	3 - 8	YES	NO	8	6	9	10	8	3725	0.28	12'-8"	2'-10"	0.41	8'-6"	0.44	8'-6"	0.20	6'-6"	0.24	6'-3"	0.24	6'-3"

✳ ALL CLASS 1 CULVERTS WITH FILL HEIGHTS OF LESS THAN 2'-0" REQUIRE A DISTRIBUTION SLAB. IF A DISTRIBUTION SLAB IS NOT REQUIRED, INDICATE "NO" IN THIS BOX.

✳✳ FOR PEDESTRIAN CULVERT APPLICATIONS HIDE-AWAY OR RECESSED TIE CONNECTIONS ARE REQUIRED, SEE MnDOT STANDARD PLATE 3145F. IF REQUIRED, INDICATE "YES" IN THIS BOX.

✳✳✳ BOX CULVERTS WITH SPANS FROM 6 TO 14 FT. ARE DESIGNED FOR HL-93 LIVE LOADS (AASHTO LRFD 3.6.2.1) NOT INCLUDING THE DESIGN LANE LOAD. BOXES WITH SPANS OF 16 FT. ARE DESIGNED FOR HL-93 LIVE LOADS INCLUDING THE DESIGN LANE LOAD.

REVISION:

APPROVED: MARCH 24, 2011
Nancy Daubenberger
STATE BRIDGE ENGINEER

FIG. 5-395.101(A)

S.P. 179-020-031 S.P. 019-605-028

BARREL DETAILS
SHEET 11 OF 15

BOX CULVERT DETAILS

DRAWN BY: CT | CHECKED BY: HS | CERTIFIED BY Scott Cole LICENSED PROFESSIONAL ENGINEER | LIC. NO. 23344 DATE 6/18/12

STATE PROJ. NO. 1901-148 (T.H. 13) SHEET NO. 423 OF 442 SHEETS

DISTRICT #: METRO
IPLOT NAME: fig510a
PATH & FILENAME: Projects/DM_ROS/013/1901/148/Design/PlanSheets/BoxCulvert/fig510a.dgn
PLOTTED/REVISED: 13-JUN-2012 10:38

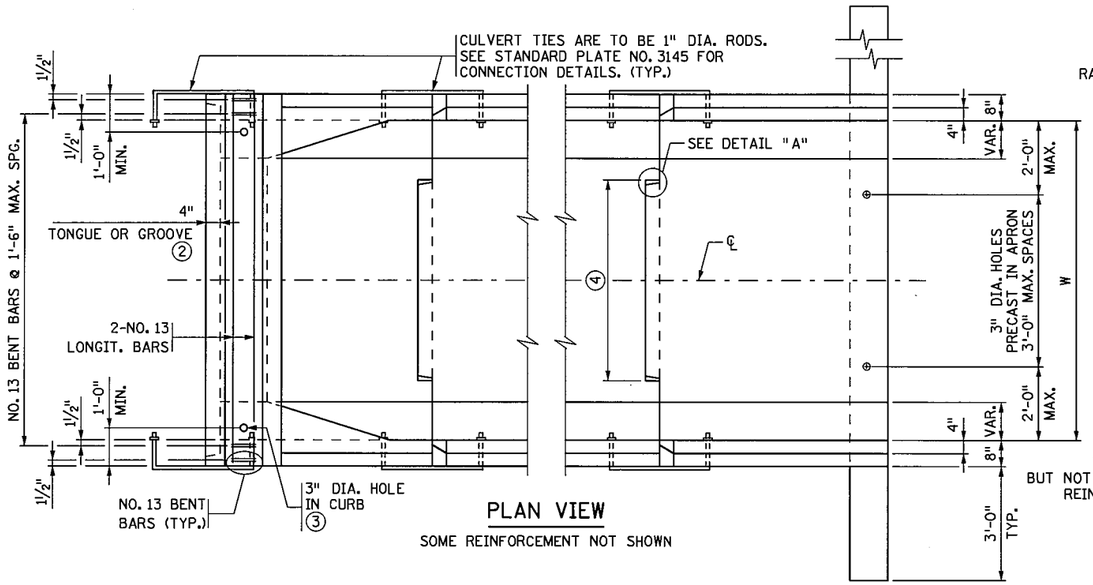

PLAN VIEW

SOME REINFORCEMENT NOT SHOWN

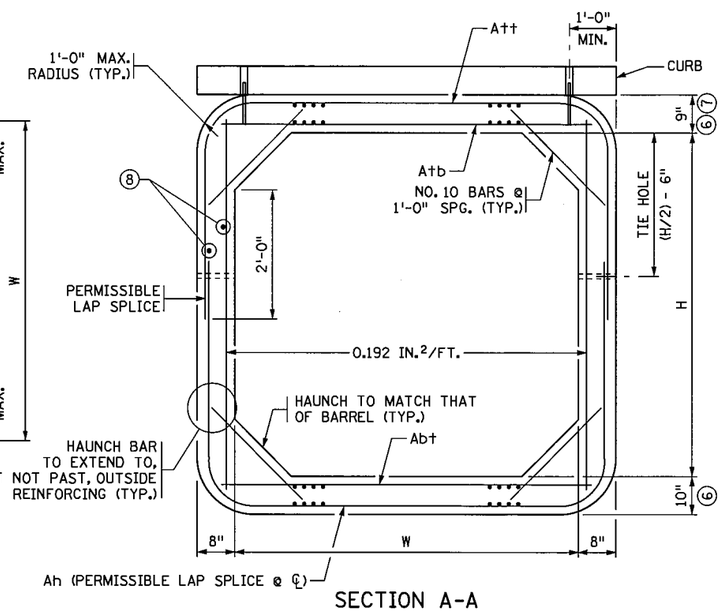

SECTION A-A

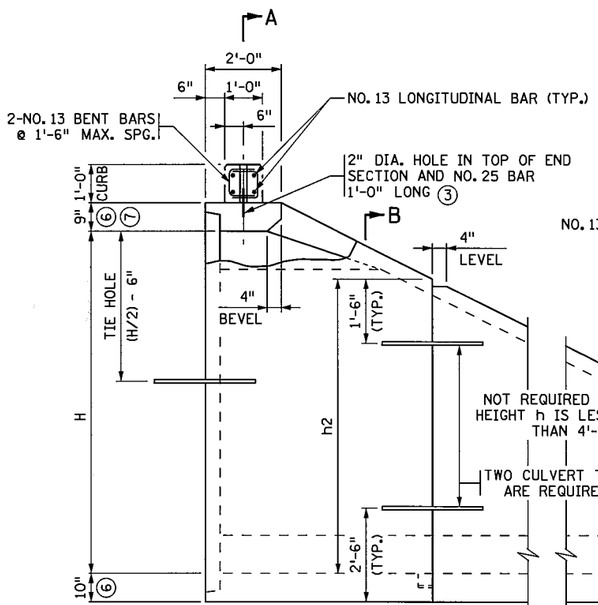

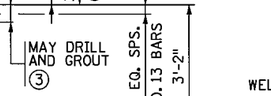

FABRIC LAYER DETAIL

WHEN MORE THAN ONE LAYER OF WELDED WIRE FABRIC IS USED TO OBTAIN THE REQUIRED REINFORCEMENT AREAS, THE WIRES OF THE WELDED WIRE FABRIC SHALL BE PLACED AS SHOWN.

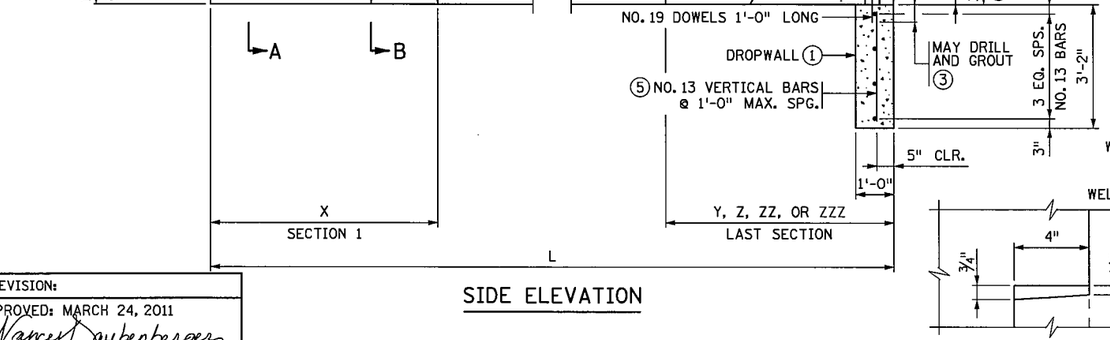

SIDE ELEVATION

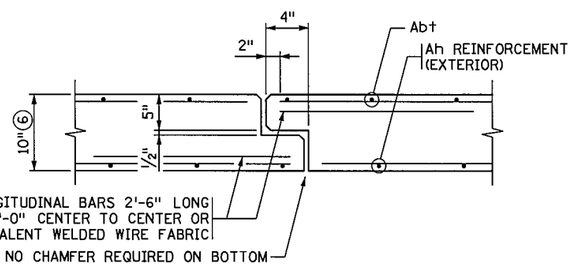

TONGUE AND GROOVE JOINT DETAIL

BETWEEN END SECTIONS

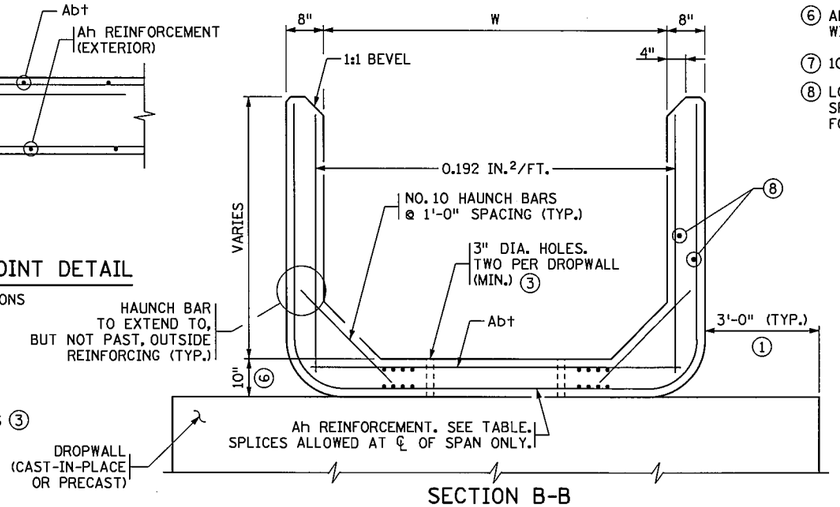

SECTION B-B

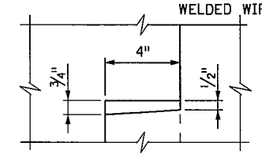

DETAIL "A"

CONSTRUCTION NOTES

SEE FIG. 5-395.101(A) AND FIG. 5-395.101(B) FOR ADDITIONAL DIMENSIONS AND CONSTRUCTION NOTES.

ALL END SECTIONS REQUIRE CURB ON LINTEL BEAM.

ON ALL END SECTIONS FOR WATERWAYS, USE DROPWALLS ON INLET AND OUTLET ENDS.

SEE FIG. 5-395.115 FOR EMBANKMENT PROTECTION.

FINISH ALL EXPOSED EDGES OF CONCRETE WITH ½" OR ¾" CHAMFER OR RADIUS UNLESS OTHERWISE NOTED.

① WITH DOUBLE BOXES LOCATE DROPWALL JOINTS BETWEEN END SECTIONS. SEE FIG. 5-395.111 FOR ALTERNATE DROPWALLS. LIMITS OF EXCAVATION FOR DROPWALL TO BE APPROXIMATELY THE SAME AS DROPWALL DIMENSIONS. DROPWALL TO BE CONCRETE MIX NO. 1A43 OR MIX NO. 3Y43. FURNISHING AND INSTALLATION OF DROPWALL TO BE INCLUDED IN PRICE BID FOR END SECTIONS. DROPWALL NOT REQUIRED FOR NON-WATERWAY USE.

② CHECK LOCATION TO DETERMINE WHETHER A TONGUE OR A GROOVE IS USED.

③ FILL HOLE WITH GROUT. GROUT SHALL CONSIST OF 1 PART CEMENT AND 2 PARTS SAND. USE TYPE 1A AIR ENTRAINED PORTLAND CEMENT. GROUT MIX SHALL HAVE A MAXIMUM SLUMP OF 4".

④ 3'-6" TONGUE AND 3'-7" GROOVE FOR 6'-0" WIDE CULVERTS. 5'-0" TONGUE AND 5'-1" GROOVE FOR CULVERTS OVER 6'-0" WIDE. CENTER TONGUE AND GROOVE ON ℄ OF EACH APRON JOINT.

⑤ AS AN ALTERNATE TO THE ONE LAYER WELDED WIRE FABRIC, PROVIDE TWO LAYERS OF REBAR OR WELDED WIRE FABRIC WITH THE STEEL AREA EQUAL TO HALF OF THE TEMPERATURE STEEL PER CODE REQUIREMENTS IN EACH FACE OF THE DROPWALL.

⑥ APRON TOP AND BOTTOM SLAB THICKNESS MAY BE 8" FOR CULVERTS WITH 6' SPANS ONLY.

⑦ 10" MINIMUM TOP SLAB FOR 14' AND 16' SPANS.

⑧ LONGITUDINAL REINFORCEMENT PERPENDICULAR TO THE CULVERT SPAN SHALL HAVE A MINIMUM OF 0.06 SQUARE INCHES PER PERIPHERAL FOOT ON ALL FACES OF THE BARREL.

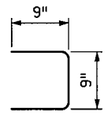

NO. 13 BENT BAR

A††, A†b REINFORCEMENT		
WIDTH (FT.)	A†† (IN²/FT.)	A†b (IN²/FT.)
6	0.27	0.44
8	0.47	0.60
10	0.62	0.74
12	0.88	1.06
14	1.20	1.58
16	1.52	2.09

A b† REINFORCEMENT	
WIDTH (FT.)	A b† (IN²/FT.)
6-10	0.20
12	0.30
14	0.39
16	0.39

APRON DIMENSIONS & Ah REINFORCEMENT																
H	L	SECTION 1		h2	SECTION 2		h3	SECTION 3		h4	SECTION 4		h5	SECTION 5		h6
FT.	FT.	X	Ah		Y	Ah		Z	Ah		ZZ	Ah		ZZZ	Ah	
~~4~~	~~8~~	~~8'~~	~~0.192~~	~~1'-9"~~												
~~5~~	~~10~~	~~6'~~	~~0.192~~	~~3'-9"~~	~~4'~~	~~0.192~~	~~1'-9"~~									
6	12	6'	0.192	4'-9"	6'	0.192	1'-9"									
~~7~~	~~14~~	~~6'~~	~~0.192~~	~~5'-9"~~	~~8'~~	~~0.192~~	~~1'-9"~~									
~~8~~	~~16~~	~~6'~~	~~0.20~~	~~6'-9"~~	~~6'~~	~~0.192~~	~~3'-9"~~	~~4'~~	~~0.192~~	~~1'-9"~~						
~~9~~	~~18~~	~~6'~~	~~0.29~~	~~7'-9"~~	~~6'~~	~~0.20~~	~~4'-9"~~	~~6'~~	~~0.192~~	~~1'-9"~~						
~~10~~	~~20~~	~~6'~~	~~0.42~~	~~8'-9"~~	~~6'~~	~~0.29~~	~~5'-9"~~	~~8'~~	~~0.192~~	~~1'-9"~~						
~~11~~	~~22~~	~~6'~~	~~0.60~~	~~9'-9"~~	~~6'~~	~~0.42~~	~~6'-9"~~	~~6'~~	~~0.192~~	~~3'-9"~~	~~4'~~	~~0.192~~	~~1'-9"~~			
~~12~~	~~24~~	~~6'~~	~~0.78~~	~~10'-9"~~	~~6'~~	~~0.60~~	~~7'-9"~~	~~6'~~	~~0.20~~	~~4'-9"~~	~~6'~~	~~0.192~~	~~1'-9"~~			
~~13~~	~~26~~	~~6'~~	~~1.03~~	~~11'-9"~~	~~6'~~	~~0.78~~	~~8'-9"~~	~~6'~~	~~0.28~~	~~5'-9"~~	~~8'~~	~~0.192~~	~~1'-9"~~			
~~14~~	~~28~~	~~6'~~	~~1.38~~	~~12'-9"~~	~~6'~~	~~1.03~~	~~9'-9"~~	~~6'~~	~~0.40~~	~~6'-9"~~	~~6'~~	~~0.192~~	~~3'-9"~~	~~4'~~	~~0.192~~	~~1'-9"~~

NOTE: Ah IS AREA OF REINFORCEMENT PER FOOT OF LENGTH (IN²/FT.)

PRECAST CONCRETE END SECTION
TYPE I - SINGLE OR DOUBLE BARREL
FOR SKEWS UP TO 7½°

S.P. 179-020-031 S.P. 019-605-028

SHEET 12 OF 15

FIG. 5-395.102

BOX CULVERT DETAILS

STATE PROJ. NO. 1901-148 (T.H. 13) SHEET NO. 424 OF 442 SHEETS

REVISION:

APPROVED: MARCH 24, 2011
Nancy Daubenberger
STATE BRIDGE ENGINEER

DRAWN BY: CT | CHECKED BY: HS | CERTIFIED BY Scott Carlstrom LICENSED PROFESSIONAL ENGINEER | LIC. NO. 23344 DATE 6/18/12

DISTRICT #: METRO
IPLOT NAME: fig5102
PATH & FILENAME: Projects/DM_ROS/013/1901/148/Design/PlanSheets/BoxCulvert/fig5102.dgn
PLOTTED/REVISED: 13-JUN-2012 10:38

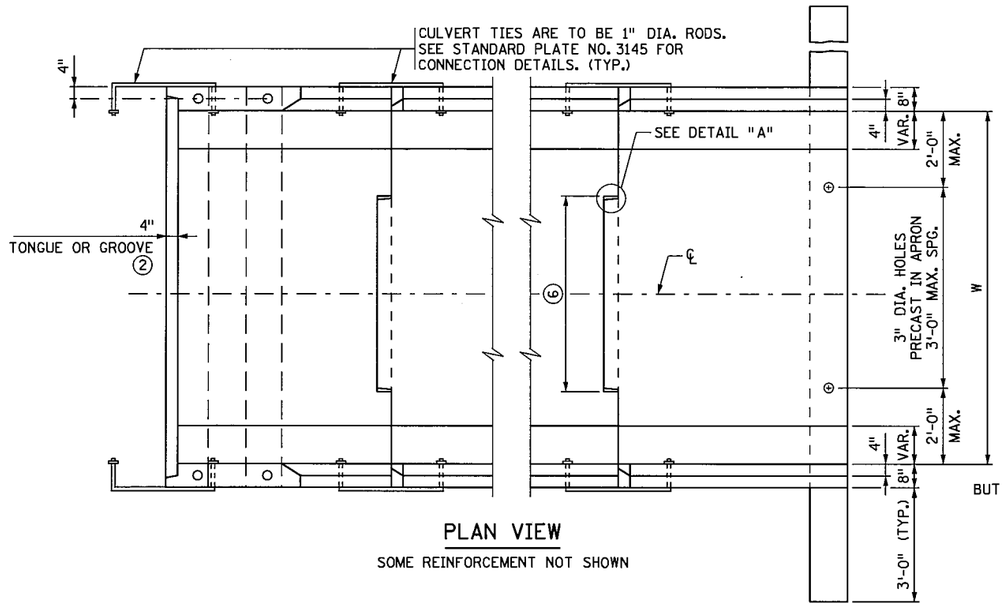

PLAN VIEW

SOME REINFORCEMENT NOT SHOWN

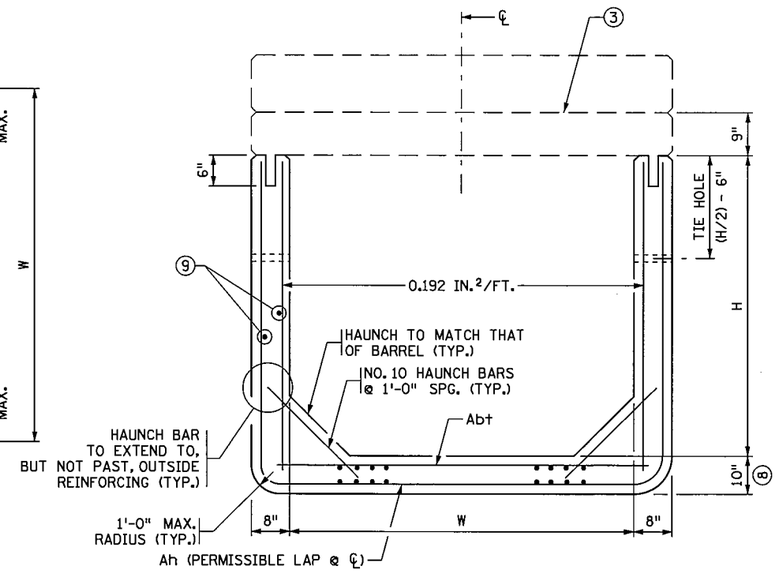

SECTION A-A

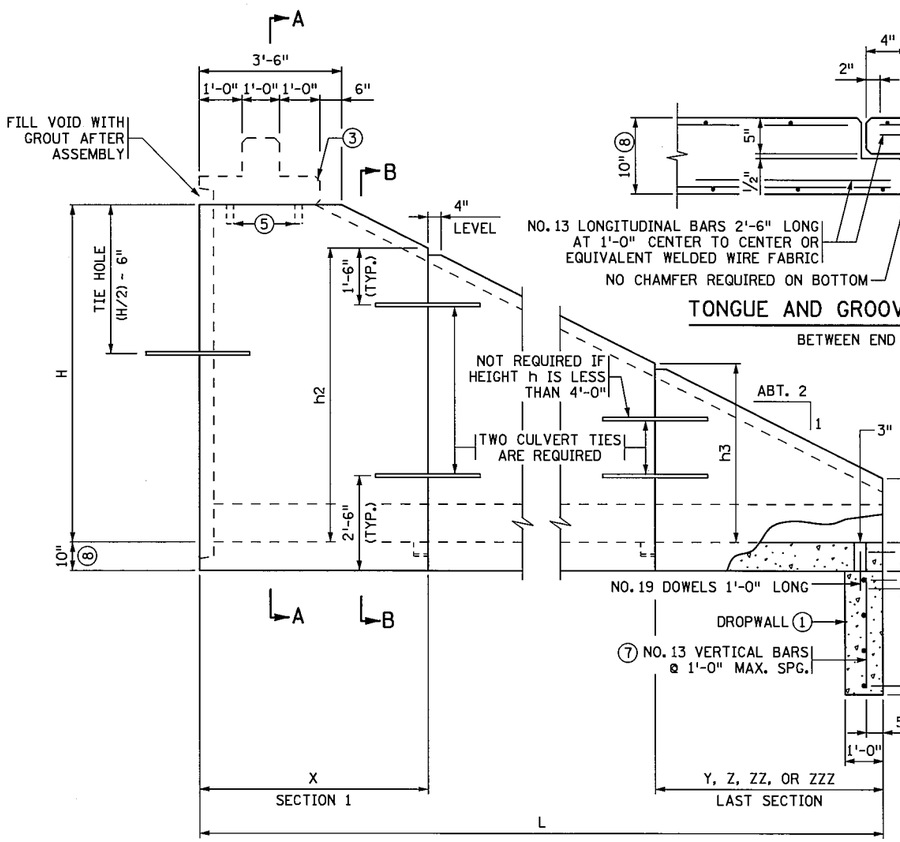

SIDE ELEVATION

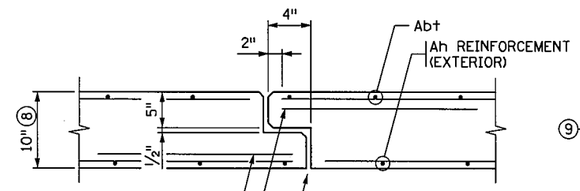

TONGUE AND GROOVE JOINT DETAIL

BETWEEN END SECTIONS

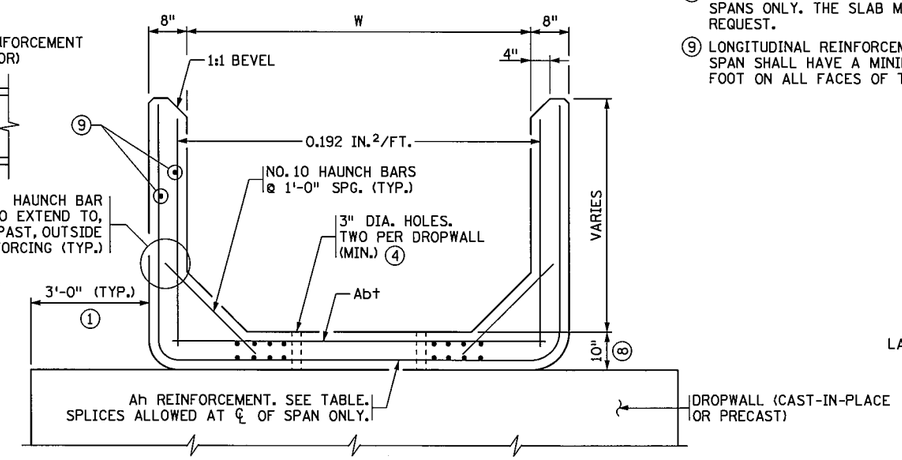

SECTION B-B

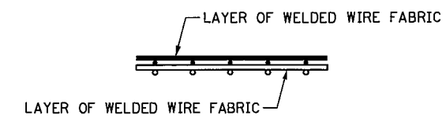

FABRIC LAYER DETAIL

WHEN MORE THAN ONE LAYER OF WELDED WIRE FABRIC IS USED TO OBTAIN THE REQUIRED REINFORCEMENT AREAS, THE WIRES OF THE WELDED WIRE FABRIC SHALL BE PLACED AS SHOWN.

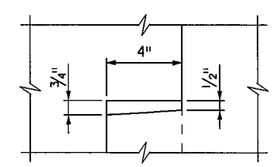

DETAIL "A"

Abt REINFORCEMENT	
WIDTH (FT.)	Abt (IN²/FT.)
6-10	0.20
12	0.30
14	0.39
16	0.39

CONSTRUCTION NOTES

SEE FIG. 5-395.101(A) AND FIG. 5-395.101(B) FOR ADDITIONAL DIMENSIONS AND CONSTRUCTION NOTES.

ON ALL END SECTIONS FOR WATERWAYS, USE DROPWALLS ON INLET AND OUTLET ENDS.

SEE FIG. 5-395.115 FOR EMBANKMENT PROTECTION.

FINISH ALL EXPOSED EDGES OF CONCRETE WITH 1/2" OR 3/4" CHAMFER OR RADIUS UNLESS OTHERWISE NOTED.

1. WITH DOUBLE BOXES LOCATE DROPWALL JOINTS BETWEEN END SECTIONS. SEE FIG. 5-395.111 FOR ALTERNATE DROPWALLS. LIMITS OF EXCAVATION FOR DROPWALL TO BE APPROXIMATELY THE SAME AS DROPWALL DIMENSIONS. DROPWALL TO BE CONCRETE MIX NO. 1A43 OR 3Y43. FURNISHING AND INSTALLATION OF DROPWALL TO BE INCLUDED IN PRICE BID FOR END SECTIONS. DROPWALL NOT REQUIRED FOR NON-WATERWAY USE.
2. CHECK LOCATION TO DETERMINE WHETHER A TONGUE OR A GROOVE IS USED.
3. SEE FIG. 5-395.104(B) FOR LINTEL BEAM DETAILS.
4. FILL HOLE WITH GROUT. GROUT SHALL CONSIST OF 1 PART CEMENT AND 2 PARTS SAND. USE TYPE 1A AIR ENTRAINED PORTLAND CEMENT. GROUT MIX SHALL HAVE A MAXIMUM SLUMP OF 4".
5. 2" DIAMETER HOLE, 6" DEEP IN TOP OF THE SECTION WALL.
6. 3'-6" TONGUE AND 3'-7" GROOVE FOR 6'-0" WIDE CULVERTS. 5'-0" TONGUE AND 5'-1" GROOVE FOR CULVERTS OVER 6'-0" WIDE. CENTER TONGUE AND GROOVE ON ℄ OF EACH APRON JOINT.
7. AS AN ALTERNATE TO THE ONE LAYER WELDED WIRE FABRIC, PROVIDE TWO LAYERS OF REBAR OR WELDED WIRE FABRIC WITH THE STEEL AREA EQUAL TO HALF OF THE TEMPERATURE STEEL PER CODE REQUIREMENTS IN EACH FACE OF THE DROPWALL.
8. APRON BOTTOM SLAB THICKNESS MAY BE 8" FOR CULVERTS WITH 6' SPANS ONLY. THE SLAB MAY BE THICKENED AT CONTRACTOR/FABRICATOR REQUEST.
9. LONGITUDINAL REINFORCEMENT PERPENDICULAR TO THE CULVERT SPAN SHALL HAVE A MINIMUM OF 0.06 SQUARE INCHES PER PERIPHERAL FOOT ON ALL FACES OF THE BARREL.

APRON DIMENSIONS & Ah REINFORCEMENT

H FT.	L FT.	SECTION 1 X	SECTION 1 Ah	h2	SECTION 2 Y	SECTION 2 Ah	h3	SECTION 3 Z	SECTION 3 Ah	h4	SECTION 4 ZZ	SECTION 4 Ah	h5	SECTION 5 ZZZ	SECTION 5 Ah	h6
~~4~~	~~8~~	~~8'~~	~~0.192~~	~~1'-9"~~												
~~5~~	~~10~~	~~6'~~	~~0.192~~	~~3'-9"~~	~~4'~~	~~0.192~~	~~1'-9"~~									
6	12	6'	0.192	4'-9"	6'	0.192	1'-9"									
~~7~~	~~14~~	~~6'~~	~~0.192~~	~~5'-9"~~	~~8'~~	~~0.192~~	~~1'-9"~~									
~~8~~	~~16~~	~~6'~~	~~0.20~~	~~6'-9"~~	~~6'~~	~~0.192~~	~~3'-9"~~	~~4'~~	~~0.192~~	~~1'-9"~~						
~~9~~	~~18~~	~~6'~~	~~0.29~~	~~7'-9"~~	~~6'~~	~~0.20~~	~~4'-9"~~	~~6'~~	~~0.192~~	~~1'-9"~~						
~~10~~	~~20~~	~~6'~~	~~0.42~~	~~8'-9"~~	~~6'~~	~~0.29~~	~~5'-9"~~	~~8'~~	~~0.192~~	~~1'-9"~~						
~~11~~	~~22~~	~~6'~~	~~0.60~~	~~9'-9"~~	~~6'~~	~~0.42~~	~~6'-9"~~	~~6'~~	~~0.192~~	~~3'-9"~~	~~4'~~	~~0.192~~	~~1'-9"~~			
~~12~~	~~24~~	~~6'~~	~~0.78~~	~~10'-9"~~	~~6'~~	~~0.60~~	~~7'-9"~~	~~6'~~	~~0.20~~	~~4'-9"~~	~~6'~~	~~0.192~~	~~1'-9"~~			
~~13~~	~~26~~	~~6'~~	~~1.03~~	~~11'-9"~~	~~6'~~	~~0.78~~	~~8'-9"~~	~~6'~~	~~0.28~~	~~5'-9"~~	~~8'~~	~~0.192~~	~~1'-9"~~			
~~14~~	~~28~~	~~6'~~	~~1.38~~	~~12'-9"~~	~~6'~~	~~1.03~~	~~9'-9"~~	~~6'~~	~~0.40~~	~~6'-9"~~	~~6'~~	~~0.192~~	~~3'-9"~~	~~4'~~	~~0.192~~	~~1'-9"~~

NOTE: Ah IS AREA OF REINFORCEMENT PER FOOT OF LENGTH (IN²/FT.)

PRECAST CONCRETE END SECTION
TYPE III - SINGLE OR DOUBLE BARREL
FOR SKEWS UP TO 7½°

S.P. 179-020-031 S.P. 019-605-028

SHEET 13 OF 15

FIG. 5-395.104(A)

BOX CULVERT DETAILS

STATE PROJ. NO. 1901-148 (T.H. 13) SHEET NO. 425 OF 442 SHEETS

REVISION:

APPROVED: MARCH 24, 2011

DRAWN BY: STATE BRIDGE ENGINEER CHECKED BY: HS

CERTIFIED BY Scott Corbett LICENSED PROFESSIONAL ENGINEER LIC. NO. 23344 DATE 6/18/12

PLOTTED/REVISED: 13-JUN-2012 10:38
DISTRICT #: METRO
IPLOT NAME: fig5104a
PATH & FILENAME: Projects/DM_ROS/013/1901/148/Design/PlanSheets/BoxCulvert/fig5104a.dgn

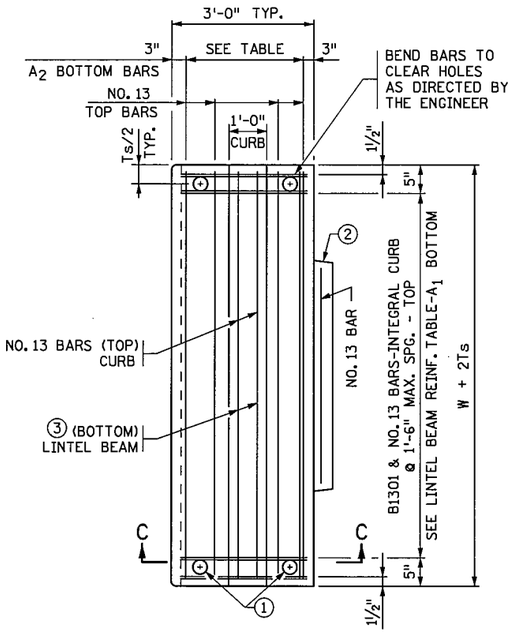

PLAN VIEW OF SQUARE LINTEL BEAM

LINTEL BEAM BOTTOM REINFORCEMENT		
WIDTH W (FT.)	A_1	A_2
6	NO. 13 @ 1'-2"	NO. 13 @ 9½"
8	NO. 13 @ 8"	NO. 16 @ 8"
10	NO. 16 @ 8"	NO. 19 @ 7½"
12	NO. 16 @ 6"	NO. 19 @ 6"
14	NO. 19 @ 6"	NO. 22 @ 6"
16	NO. 19 @ 6"	NO. 22 @ 6"

NOTE: MAXIMUM BAR SPACING GIVEN, REDUCE AS NECESSARY

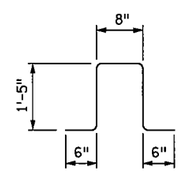

B1301

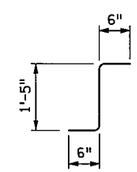

B1301
ALTERNATE

④
2 REQUIRED

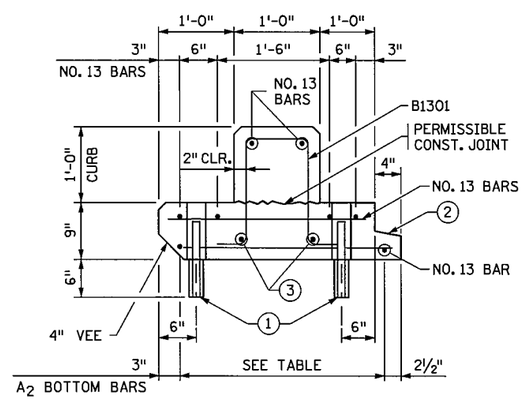

SECTION C-C

INTEGRAL CURB WITH TONGUE.
ADDITIONAL REINFORCEMENT IN TONGUE NOT SHOWN.

CONSTRUCTION NOTES

SEE FIG. 5-395.101(A) AND FIG. 5-395.101(B) FOR ADDITIONAL DIMENSIONS AND CONSTRUCTION NOTES.

ALL END SECTIONS REQUIRE CURB ON LINTEL BEAM.

GROUT SHALL CONSIST OF 1 PART CEMENT AND 2 PARTS SAND. USE TYPE 1A AIR ENTRAINED PORTLAND CEMENT. GROUT MIX SHALL HAVE A MAXIMUM SLUMP OF 4".

① 3" DIA. HOLE THROUGH LINTEL BEAM AND 2" DIA. HOLE IN TOP OF WALL SECTION. PLACE NO. 25 DOWEL, 1'-0" LONG, IN HOLE AND FILL HOLE WITH GROUT.

② CHECK THE LOCATION TO DETERMINE WHETHER A TONGUE OR A GROOVE IS USED. TONGUE AND GROOVE TO TERMINATE AT HAUNCH.

③ FOR SPANS UNDER 10'-0" USE NO. 25 BARS. FOR SPANS OF 10'-0" TO 12'-0" USE NO. 29 BARS. FOR 14'-0" AND 16'-0" SPAN, USE NO. 32 BARS.

④ ALTERNATE BAR BEND MAY BE USED FOR B1301.

PRECAST CONCRETE END SECTION
TYPE III - SINGLE OR DOUBLE BARREL
FOR SKEWS UP TO 7½°

S.P. 179-020-031 S.P. 019-605-028

SHEET 14 OF 15

FIG. 5-395.104(B)

BOX CULVERT DETAILS

REVISION:

APPROVED: MARCH 24, 2011
Nancy Daubenberger
STATE BRIDGE ENGINEER

DRAWN BY: CT | CHECKED BY: HS | CERTIFIED BY Scott Cowles LICENSED PROFESSIONAL ENGINEER | LIC. NO. 23344 DATE 6/18/12

STATE PROJ. NO. 1901-148 (T.H. 13) SHEET NO. 426 OF 442 SHEETS

DISTRICT #: METRO
IPLOT NAME: fig5104b
PATH & FILENAME: Projects/DM_ROS/013/1901/148/Design/PlanSheets/BoxCulvert/fig5104b.dgn
PLOTTED/REVISED: 13-JUN-2012 10:38

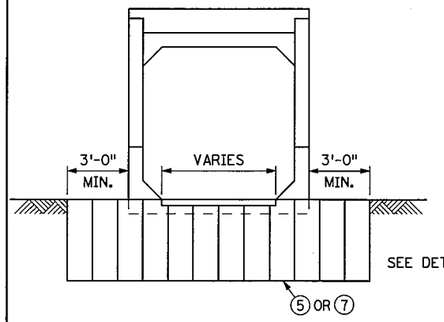

END VIEW

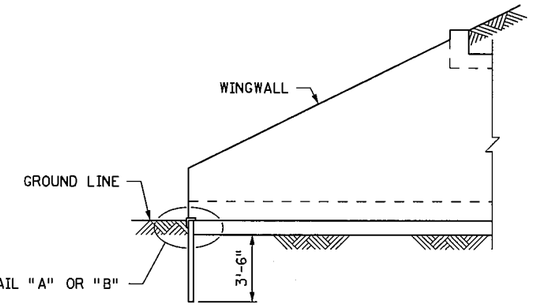

ELEVATION

ALTERNATES 1 & 2 (STEEL SHEET PILING)

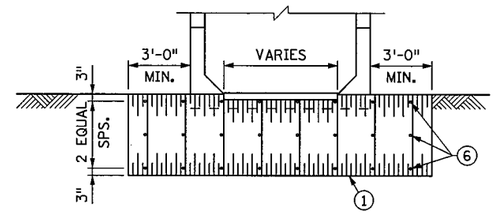

END VIEW

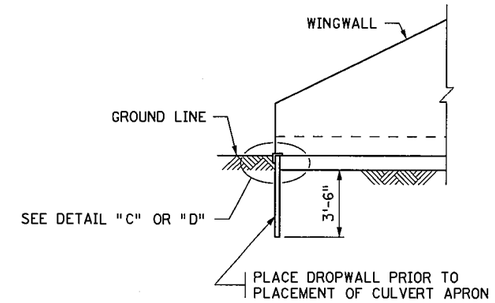

ELEVATION

ALTERNATES 3 & 4 (GALVANIZED STEEL SHEETS)

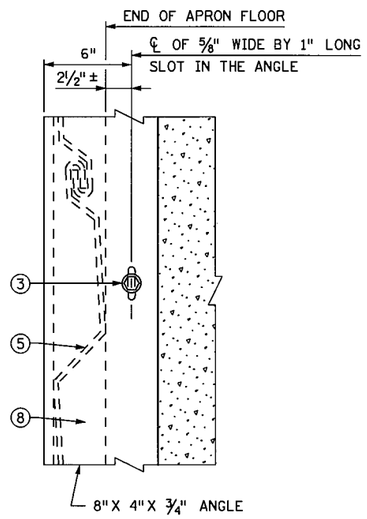

PLAN

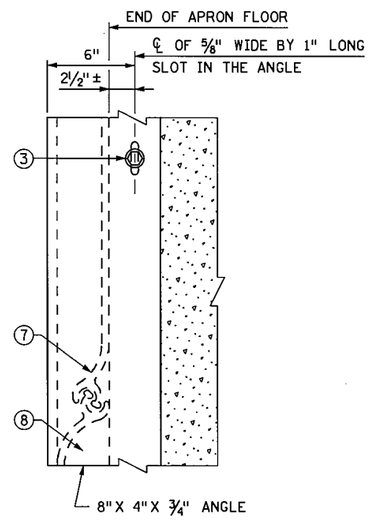

PLAN

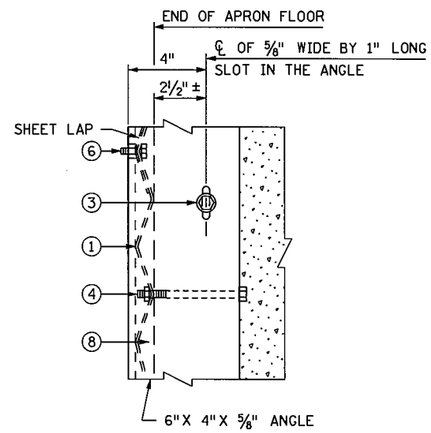

PLAN

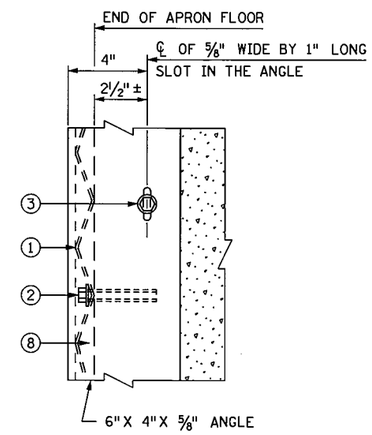

PLAN

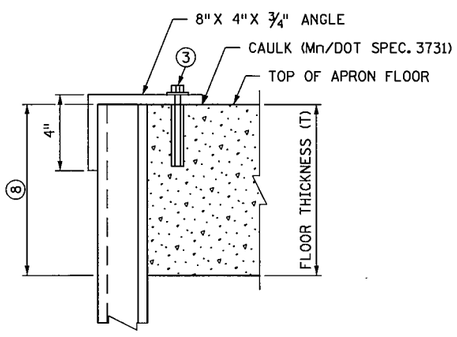

ELEVATION

DETAIL "A" - ALTERNATE 1

STEEL SHEET PILING SHOWN

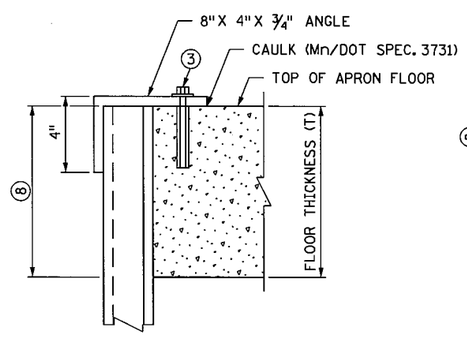

ELEVATION

DETAIL "B" - ALTERNATE 2

STEEL SHEET PILING SHOWN

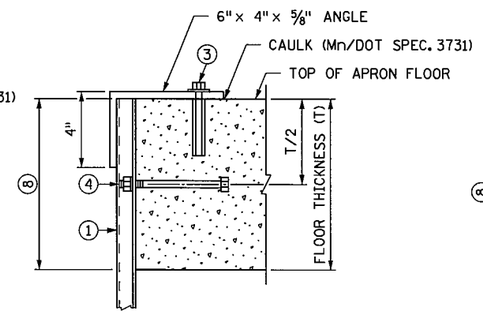

ELEVATION

DETAIL "C" - ALTERNATE 3

ON NEW CONSTRUCTION ONLY

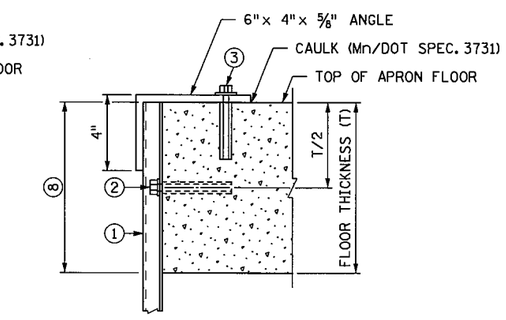

ELEVATION

DETAIL "D" - ALTERNATE 4

ON NEW OR OLD CONSTRUCTION

CONSTRUCTION NOTES

GALVANIZE ALL FASTENERS AS PER Mn/DOT SPEC. 3392.

BEFORE CULVERT PLANS ARE PREPARED, SAMPLES SHALL BE TAKEN FROM THE DRAINAGE AREA FOR PH DETERMINATION. THE SOIL AND WATER SHOULD HAVE A PH OF 6.5 OR MORE IF SHEET STEEL IS USED.

① 2½" x ½" OR 2⅔" x ½" CORRUGATED (12 GAGE) OR HEAVIER GALVANIZED STEEL SHEETS.

② FASTEN THE STEEL SHEETS TO THE FRONT EDGE OF THE APRON WITH ⅜" DIAMETER BY 4" LONG BOLTS AND APPROVED ANCHORAGES (10" ± CENTER TO CENTER, TO THE NEAREST VALLEY).

③ FASTEN THE 8" x 4" x ¾" OR 6" x 4" x ⅝" ANGLE WITH ⅜" DIAMETER 4" LONG BOLTS, 1" O.D. WASHER AND AN APPROVED ANCHORAGE (2'-0" SPACING).

④ FASTEN THE STEEL SHEETS TO THE FRONT EDGE OF THE APRON WITH ⅜" DIAMETER 5" LONG BOLTS, NUT AND LOCK WASHER (10" ± CENTER TO CENTER, TO THE NEAREST VALLEY).

⑤ (12 GAGE) GALVANIZED CORRUGATED STEEL SHEET PILING, INTERLOCKING TYPE A.

⑥ ⅜" DIA. x 1" LONG BOLT WITH NUT, TO LAP STEEL SHEETS.

⑦ STEEL SHEET PILING, SECTION NO. MP-112 OR EQUAL.

⑧ FILL THE VOIDS AS SHOWN, WITH CONCRETE OR CONCRETE GROUT, AS APPROVED BY THE ENGINEER.

ALTERNATE DROPWALLS
FOR BOX CULVERTS

S.P. 179-020-031 S.P. 019-605-028

FIG. 5-395.111

BOX CULVERT DETAILS

STATE PROJ. NO. 1901-148 (T.H. 13) SHEET NO. 427 OF 442 SHEETS

REVISION:

APPROVED: MARCH 24, 2011
Nancy Daubenberger
STATE BRIDGE ENGINEER

DRAWN BY: CT | CHECKED BY: HS | CERTIFIED BY Scott Carlstrom LICENSED PROFESSIONAL ENGINEER | LIC. NO. 23344 DATE 6/18/12

PLOTTED/REVISED: 13-JUN-2012 10:39
DISTRICT #: METRO
IPLOT NAME: fig5III
PATH & FILENAME: Projects/DM_ROS/013/1901/148/Design/PlanSheets/BoxCulvert/fig5III.dgn

STORM WATER POLLUTION PREVENTION PLAN (SWPPP) NARRATIVE

PROJECT DESCRIPTION/LOCATION

SP 1901-148, S.P. 179-020-031 AND S.P. 019-605-028 ARE LOCATED ON TH 13 FROM WASHBURN AVENUE TO I35W IN THE CITIES OF BURNSVILLE.

THE PLANNED SCOPE OF THE PROJECT INCLUDES:

GRADE SEPARATION INTERCHANGE CONSTRUCTION AT CSAH 5 AND TH 13.

SPECIAL AND IMPAIRED WATERS

THESE SPECIAL AND IMPAIRED WATERS ARE LOCATED WITHIN ONE MILE OF THE PROJECT LIMITS AND RECEIVE RUNOFF FROM THE PROJECT SITE. DUE TO THE PROXIMITY OF THESE SPECIAL AND IMPAIRED WATERS THE BMPS DESCRIBED IN APPENDIX A OF THE NPDES PERMIT WILL APPLY TO ALL AREAS OF THE SITE.

MINNESOTA RIVER AND CREDIT RIVERS ARE IMPAIRED WATERS WITHIN ONE MILE THAT THE PROJECT DRAINS TO. THE MINNESOTA RIVER IS IMPAIRED WITH TURBIDITY AND DISSOLVED OXYGEN. THE CREDIT RIVER IS IMPARED WITH TURBIDITY.

ENVIRONMENTALLY SENSITIVE AREAS

THERE ARE NO ENVIRONMENTALLY SENSITIVE AREAS WITHIN ONE MILE OF THE PROJECT LIMITS THAT THE CONTRACTOR MUST BE AWARE OF.

LONG TERM MAINTENANCE AND OPERATION

MN/DOT METRO DISTRICT MAINTENANCE STAFF ARE RESPONSIBLE FOR THE LONG TERM MAINTENANCE AND OPERATION OF THE PERMANENT STORMWATER SYSTEM WITHIN T.H. 13 RIGHT OF WAY. SEE METRO MN/DOT MS4 SWPPP FOR INFORMATION REGARDING ONGOING MAINTENANCE. THE MS4 SWPPP CAN BE FOUND AT WWW.DOT.STATE.MN.US/METRO/WATERRESOURCES/PDF/2008SWPP.PDF. OR MN/DOT HAS ENTERED INTO A COOPERATIVE AGREEMENT WITH (CITY/COUNTY) THAT IDENTIFIES THE AGENCY THAT IS RESPONSIBLE FOR ONGOING MAINTENANCE. FOR MORE INFORMATION, SEE AGREEMENT NUMBER 01483 ON FILE WITH MN/DOT METRO DISTRICT.

SWPPP TRAINING

THIS SWPPP WAS PREPARED BY MN/DOT PERSONNEL CERTIFIED IN THE DESIGN OF CONSTRUCTION SWPPPS. COPIES OF THE CERTIFICATIONS ARE ON FILE WITH MN/DOT AND ARE AVAILABLE UPON REQUEST. THE CONTRACTOR IS RESPONSIBLE FOR PROVIDING A CERTIFIED EROSION CONTROL SUPERVISOR THAT IS RESPONSIBLE FOR OVERSEEING THE IMPLEMENTATION OF THE SWPPP. THE CONTRACTOR MUST PROVIDE PROOF OF CERTIFICATION AT THE PRECONSTRUCTION MEETING AND WILL NOT BE ALLOWED TO COMMENCE WORK UNTIL PROOF OF CERTIFICATION HAS BEEN PROVIDED TO THE PROJECT ENGINEER.

EROSION CONTROL SUPERVISOR

IN ACCORDANCE WITH SPEC. 2573.3 A1 THE CONTRACTOR WILL PROVIDE A CERTIFIED EROSION CONTROL SUPERVISOR IN GOOD STANDING WHO IS KNOWLEDGEABLE AND EXPERIENCED IN THE APPLICATION OF EROSION PREVENTION AND SEDIMENT CONTROL BEST MANAGEMENT PRACTICES. (THE EROSION CONTROL SUPERVISOR IS INCIDENTAL TO THE PROJECT.)

THE EROSION CONTROL SUPERVISOR WILL WORK WITH THE PROJECT ENGINEER TO OVERSEE THE IMPLEMENTATION OF THE SWPPP AND THE INSTALLATION, INSPECTION, AND MAINTENANCE OF THE EROSION PREVENTION AND SEDIMENT CONTROL BMPS BEFORE, DURING AND AFTER CONSTRUCTION UNTIL THE NOTICE OF TERMINATION (NOT) HAS BEEN FILED WITH THE MPCA.

THE EROSION CONTROL SUPERVISOR IS RESPONSIBLE FOR COMPLYING WITH ALL THE INSPECTION AND MAINTENANCE REQUIREMENTS STATED IN THE NPDES PERMIT PART IV. F. INSPECTIONS OF THE ENTIRE CONSTRUCTION SITE WILL OCCUR A MINIMUM OF ONCE EVERY SEVEN DAYS DURING ACTIVE CONSTRUCTION AND WITHIN 24 HOURS AFTER A RAINFALL EVENT GREATER THAN 0.5 INCHES IN 24 HOURS. THE EROSION CONTROL SUPERVISOR WILL THOROUGHLY INSPECT ALL EROSION PREVENTION AND SEDIMENT CONTROL BMPS TO ENSURE INTEGRITY AND EFFECTIVENESS OF EACH BMP. ALL INSPECTIONS AND MAINTENANCE CONDUCTED DURING CONSTRUCTION MUST BE RECORDED IN WRITING AND THESE RECORDS MUST BE RETAINED WITH THE SWPPP. INSPECTION REPORTS MUST BE SUBMITTED TO THE PROJECT ENGINEER IN A FORMAT THAT MEETS OR EXCEEDS THE PROJECT ENGINEERS EXPECTATIONS.RECORDS OF EACH INSPECTION AND MAINTENANCE ACTIVITY SHALL INCLUDE:

A. DATE AND TIME OF INSPECTIONS;
B. NAME OF PERSONS CONDUCTING INSPECTIONS;
C. FINDINGS OF INSPECTIONS, INCLUDING RECOMMENDATIONS FOR CORRECTIVE ACTIONS;
D. CORRECTIVE ACTIONS TAKEN INCLUDING DATES, TIMES, AND PARTY COMPLETING MAINTENANCE ACTIVITIES;
E. DATE AND AMOUNT OF ALL RAINFALL EVENTS GREATER THAN 0.5 INCH IN 24 HOURS;
F. DOCUMENTS AND CHANGES MADE TO THE SWPPP.

ENVIRONMENTAL REVIEW

THERE ARE NOT STORMWATER MITIGATION MEASURES REQUIRED AS A RESULT OF AN ENVIRONMENTAL, ARCHEOLOGICAL OR AGENCY REVIEW. ALL MITIGATION MEASURES HAVE BEEN ADDRESSED IN THIS PLAN SET OR THE SPECIAL PROVISIONS.

THIS PROJECT IS LOCATED IN PORT CARGILL (ELEVATOR C) WELL HEAD PROTECTION AREA.

SOIL TYPES

SOIL TYPES TYPICALLY FOUND ON THIS PROJECT ARE B, B/D, OR UNIDENTIFIED.

LAND FEATURE CHANGES

TOTAL DISTURBED AREA: 47.1 ACRES
TOTAL EXISTING IMPERVIOUS SURFACE AREA: 27.3 ACRES
TOTAL PROPOSED IMPERVIOUS SURFACE AREA: 24.6 ACRES
TOTAL PROPOSED NET CHANGE IN IMPERVIOUS SURFACE AREA: 2.7 ACRES

I HEREBY CERTIFY THAT THIS SHEET HAS BEEN PREPARED BY ME OR UNDER MY DIRECT SUPERVISION AND THAT I AM A DULY LICENSED PROFESSIONAL ENGINEER UNDER THE LAWS OF THE STATE OF MINNESOTA.

PRINTED NAME: SCOTT CARLSTROM LICENSE# 23344

DATE: 6/14/12 SIGNATURE: Scott Carlstrom
Licensed Professional Engineer

PROJECT CONTACTS

THE PROJECT ENGINEER AND CONTRACTOR ARE RESPONSIBLE FOR IMPLEMENTATION OF THE SWPPP AND INSTALLATION, INSPECTION AND MAINTENANCE OF THE EROSION PREVENTION AND SEDIMENT CONTROL BMPS BEFORE, DURING AND AFTER CONSTRUCTION UNTIL THE NOTICE OF TERMINATION HAS BEEN FILED.

ORGANIZATION	CONTACT NAME	PHONE
MN/DOT METRO DESIGN	HARVEY SCHEFFERT	651-234-7661
MN/DOT WATER RESOURCES ENGINEERING	SCOTT CARLSTROM	651-234-7525
DAKOTA COUNTY ENGINEER	JOHN SASS	651-775-0921
DAKOTA COUNTY CONSTRUCTION ENGINEER	ROSS BECKWITH	651-366-3629
CITY OF BURNSVILLE	RYAN PETERSON	952-895-4459
LOWER MINNESOTA WATERSHED DISTRICT	TERRY SCHWALBE	952-856-5875
COUNTY AG INSPECTOR	TODD MATZKE	651-480-7780
MINNESOTA POLLUTION CONTROL AGENCY	TEDDI SEIBRING	651-757-2716

MPCA 24 HOUR EMERGENCY NOTIFICATION: 651-649-5451
800-422-0798

LOCATION OF SWPPP REQUIREMENTS

THE REQUIRED SWPPP ELEMENTS MAY BE LOCATED IN MANY PLACES WITHIN THE PLAN SET AS WELL AS IN THE SPECIAL PROVISIONS, MNDOT SPEC BOOK (2005 EDITION) OR ON FILE WITH MN/DOT. THE NOTES AND TABLE BELOW ARE INTENDED TO BE A QUICK REFERENCE FOR THE CONTRACTOR AND PROJECT ENGINEER TO USE IN THE FIELD. THERE MAY BE ADDITIONAL REQUIRED SWPPP ELEMENTS INCLUDED ON THE PROJECT THAT ARE NOT LISTED ON THIS SHEET.

LOCATION OF SWPPP REQUIREMENTS IN PROJECT PLAN

DESCRIPTION	LOCATION
TEMPORARY EROSION CONTROL MEASURES	SHEETS NO. 439-441
PERMANENT EROSION AND SEDIMENT CONTROL MEASURES	SHEETS NO. 115, 119
DIRECTION OF FLOW	SHEETS NO. 369-376
FINAL STABILIZATION	SHEETS NO. 431-438
SOILS AND CONSTRUCTION NOTES	SHEETS NO. 14
DRAINAGE STRUCTURES	SHEETS NO. 369-376
DRAINAGE TABULATION	SHEETS NO. 408-411
STORM SEWER PROFILE SHEETS	SHEETS NO. 377-407
STORM SEWER TABULATION	SHEETS NO. 408-411
EROSION AND SEDIMENT CONTROL DETAILS	SHEETS NO. 116-118, 120
EROSION CONTROL TABULATION	SHEETS NO. 35-37
TURF ESTABLISHMENT TABULATION	SHEETS NO. 38-40

DISTRICT #: METRO
IPLOT NAME: WRENOTES_SWPPP_FINAL_I
PATH & FILENAME: Projects/DM_ROS/013/1901/148/Design/Hydraulics/WRENOTES_SWPPP_FINAL.dgn
PLOTTED/REVISED: 14-JUN-2012 14:17

STORM WATER POLLUTION PREVENTION PLAN (SWPPP) NARRATIVE (CONTINUED)

GENERAL SWPPP NOTES FOR CONSTRUCTION ACTIVITY

1. THE GENERAL CONTRACTOR IS RESPONSIBLE TO COMPLY WITH ALL ASPECTS OF THE NPDES CONSTRUCTION STORMWATER PERMIT AT ALL TIMES UNTIL THE NOTICE OF TERMINATION (NOT) HAS BEEN FILED WITH THE MPCA. THE CONTRACTOR WILL DEVELOP A CHAIN OF COMMAND WITH ALL OPERATORS ON THE SITE TO ENSURE THAT THE SWPPP WILL BE IMPLEMENTED AND STAY IN EFFECT UNTIL THE CONSTRUCTION PROJECT IS COMPLETE, THE ENTIRE SITE HAS UNDERGONE FINAL STABILIZATION, AND A NOTICE OF TERMINATION (NOT) HAS BEEN SUBMITTED TO THE MPCA.

2. THE CONTRACTOR WILL PREPARE A WRITTEN, NOT ORAL, WEEKLY SCHEDULE OF PROPOSED EROSION CONTROL ACTIVITIES FOR THE PROJECT ENGINEERS APPROVAL AS PER MN/DOT SPEC. 1717.2D.

3. THE CONTRACTOR WILL PREPARE AND SUBMIT A SITE PLAN FOR THE ENGINEERS APPROVAL AS PER MN/DOT SPEC. 1717.2E FOR CONCRETE MANAGEMENT, WORK IN ENVIRONMENTALLY SENSITIVE AREAS, AREAS IDENTIFIED IN THE PLANS AS "SITE PLAN REQUIREMENT AREA,"ANY WORK THAT WILL REQUIRE DEWATERING, THE STAGING OF INLET PROTECTION DEVICES OVER THE LIFE OF THE CONTRACT AND AS REQUESTED BY THE ENGINEER. ALL SITE PLANS MUST BE SUBMITTED TO THE ENGINEER IN WRITING. THE CONTRACTOR SHALL ALLOW A MINIMUM OF 7 DAYS FOR MN/DOT TO REVIEW AND APPROVE SITE PLAN SUBMITTALS. THE CONTRACTOR WILL NOT BE ALLOWED TO COMMENCE WORK FOR WHICH A SITE PLAN IS REQUIRED UNTIL APPROVAL HAS BEEN GRANTED BY THE ENGINEER.THE CONTRACTOR WILL NOT BE GIVEN ANY EXTRA TIME IN THE CONTRACT DUE TO THE UNTIMELY SUBMITTAL OF A SITE PLAN.

4. THE CONTRACTOR WILL COMPLY WITH THE REQUIREMENTS REGARDING POLLUTION PREVENTION MANAGEMENT DURING CONSTRUCTION, WHICH WILL INCLUDE, BUT NOT LIMITED TO, PROVIDING:
   - A. CONCRETE WASHOUT AREAS FOR USE BY ALL SUBCONTRACTORS AND MN/DOT PERSONNEL. LOCATION OF WASHOUT AREAS MUST BE IDENTIFIED BY SIGNAGE AND MUST BE AT LEAST 200' FROM SITE PLAN REQUIREMENT AREAS OR ENVIRONMENTALLY SENSITIVE AREAS, AND UTILIZE A LEAK-PROOF CONTAINMENT FACILITY OR IMPERMEABLE LINER THAT PREVENTS RUNOFF ONTO ADJACENT SOILS. AN ENGINEERED COLLECTION SYSTEM CAN ALSO BE USED IF IT IS APPROVED BY THE PROJECT ENGINEER.
   - B. SOLID WASTE COLLECTION AND REMOVAL
   - C. SECONDARY CONTAINMENT
   - D. SECURED HAZARDOUS WASTE STORAGE CONTAINERS
   - E. CHEMICAL SPILL KITS
   - F. PORTABLE RESTROOM FACILITIES THAT ARE ANCHORED TO PREVENT TIPPING

5. CHEMICALS MUST BE KEPT IN A SECURE STORAGE AREA WHEN NOT IN USE. CHEMICAL STORAGE CONTAINERS MUST HAVE SECONDARY CONTAINMENT WHEN BEING USED OR STORED ON THE PROJECT SITE. CHEMICAL SPILLS OF ANY KIND (OIL, FUEL, FERTILIZER, ETC.) MUST BE CLEANED UP AND REMOVED FROM THE SITE IMMEDIATELY. THE CONTRACTOR MUST HAVE A SPILL KIT ON SITE AT ALL TIMES.

6. THE CONTRACTOR IS RESPONSIBLE FOR CREATING AND FOLLOWING A WRITTEN DISPOSAL PLAN FOR ALL WASTE MATERIALS. THE PLAN WILL INCLUDE HOW THE MATERIAL WILL BE DISPOSED OF AND THE LOCATION OF THE DISPOSAL SITE. SUBMIT TO THE ENGINEER.

7. BURNING OF ANY MATERIAL IS NOT ALLOWED WITHIN PROJECT BOUNDARY.

8. THE EROSION PREVENTION AND SEDIMENT CONTROL BMPS SHALL BE INSTALLED AS NECESSARY TO MINIMIZE EROSION FROM DISTURBED SURFACES AND CAPTURE SEDIMENT ONSITE. ALL EROSION CONTROL MEASURES SHALL BE IN PLACE PRIOR TO ANY REMOVAL WORK AND/OR GROUND DISTURBING ACTIVITIES COMMENCE AND SHALL BE MAINTAINED UNTIL THE POTENTIAL FOR EROSION HAS BEEN ELIMINATED.

9. SEDIMENT CONTROL DEVICES SHALL BE ESTABLISHED ON ALL DOWN GRADIENT PERIMETERS BEFORE ANY UP GRADIENT LAND DISTURBING ACTIVITIES BEGIN. SEDIMENT CONTROL DEVICES INCLUDE, BUT ARE NOT LIMITED TO:
   - A. PERIMETER CONTROL SHALL BE LOCATED ON THE CONTOUR TO CAPTURE OVERLAND, LOW-VELOCITY SHEET FLOWS DOWN GRADIENT OF ALL EXPOSED SOILS AND PRIOR TO DISCHARGING TO SURFACE WATERS WITH THE BMP J-HOOKED AT A MAXIMUM OF 100 FOOT INTERVALS AND SHALL CONTAIN NO MORE THAN 1/4 ACRE OF DRAINAGE AREA.
   - B. DITCH CHECKS WILL BE PLACED AS INDICATED ON THE PLANS DURING ALL PHASES OF CONSTRUCTION.
     1. TEMPORARY DITCH CHECKS WILL CONSIST OF USING ROCK DITCH CHECKS, BIOLOGS AND ROCK WEEPERS IN FRONT OF CULVERT INLETS. IN LIEU OF REMOVING TEMPORARY DITCH CHECKS, THE ROCK MAY BE PUSHED INTO THE GROUND.
     2. FILTER LOGS WILL BE PLACED DURING PERMANENT TURF ESTABLISHMENT AT THE INTERVALS IDENTIFIED IN THE PLAN.
   - C. SEDIMENT DAMAGE FROM STOCKPILES WILL BE MINIMIZED BY PLACING A ROW OF SILT FENCE A MINIMUM 5 FEET FROM THE TOE. IF THERE IS NOT ADEQUATE PROJECT AREA TO PLACE THE SILT FENCE MORE THAN 5 FEET FROM THE TOE OF THE SLOPE THE CONTRACTOR MAY SUBMIT AN ALTERNATIVE FOR APPROVAL BY THE PROJECT ENGINEER.

10. STORM SEWER INLETS SHALL BE PROTECTED AT ALL TIMES WITH THE APPROPRIATE INLET PROTECTION FOR EACH SPECIFIC PHASE OF CONSTRUCTION. INLET PROTECTION DEVICES MAY NEED TO BE PLACED MULTIPLE TIMES IN THE SAME LOCATION OVER THE LIFE OF THE CONTRACT. INLET PROTECTION DEVICES WILL BE PAID FOR ONCE PER INLET REGARDLESS OF THE NUMBER OF TIMES THE BMP IS PLACED. ALL STORM SEWER INLET PROTECTION DEVICES SHALL BE KEPT IN GOOD FUNCTIONAL CONDITION AT ALL TIMES. IF THE PROJECT ENGINEER DEEMS AN INLET PROTECTION DEVICE TO BE NONFUNCTIONAL, IN POOR CONDITION, INEFFECTIVE OR NOT APPROPRIATE FOR THE CURRENT CONSTRUCTION ACTIVITIES IT WILL BE REPLACED WITH A SUITABLE ALTERNATIVE AT NO COST TO MN/DOT. FAILURE TO PERFORM AS DESCRIBED HERE WILL RESULT IN DEDUCTIONS.

11. THE CONTRACTOR WILL PLACE CONSTRUCTION EXITS, AS NECESSARY, TO PREVENT TRACKING OF SEDIMENT ONTO PAVED SURFACES AND IN COMPLIANCE WITH PART IV OF THE NPDES PERMIT. CONSTRUCTION EXITS WILL BE SUFFICIENTLY SIZED AND MAINTAINED TO PREVENT TRACK OUT. TYPE 5 MULCH (SLASH MULCH) OR AN APPROVED ENGINEERED PRODUCT WILL BE ALLOWED FOR CONSTRUCTION EXITS IN LIEU OF CRUSHED ROCK. THIS WORK SHALL BE INCIDENTAL.

12. THE CONTRACTOR SHALL USE METHODS AND OPERATIONAL PROCEDURES THAT PREVENT DISCHARGE OR PLACEMENT OF ALL BITUMINOUS WASTES IN CONVEYANCE CHANNELS AND SENSITIVE AREAS.

13. THE CONTRACTOR SHALL USE METHODS AND OPERATIONAL PROCEEDURES THAT PREVENT CONCRETE DUST, PARTICLES, SAW CUT SLURRY, PLANING WASTE AND OTHER CONCRETE WASTES FROM LEAVING MNDOT RIGHT OF WAY.SEDIMENT DEPOSITION IN EXISTING OR FUTURE VEGETATED AREAS OR IN STORMWATER CONVEYANCE SYSTEMS IS UNACCEPTABLE. STORMWATER CONVEYANCE SYSTEMS INCLUDE INLETS AND CURB FLOWLINES, ETC.

14. DITCHES AND EXPOSED SOILS SHALL BE MAINTAINED IN AN EVEN ROUGH GRADED CONDITION IN ORDER TO ALLOW APPLICATION OF EROSION CONTROL MULCHES AND BLANKETS.

15 EXPOSED SOIL AREAS SHALL BE STABILIZED IN NO MORE THAN 7 DAYS AFTER CONSTRUCTION ACTIVITIES CEASE. A 7 DAY TIME LIMIT APPLIES IF THE SITE IS WITHIN 1 MILE OF A SPECIAL OR IMPAIRED WATER. IN MANY INSTANCES STABILIZATION WILL BE NEEDED MORE THAN ONCE DURING ROUGH GRADING ACTIVITIES. RAPID STABILIZATION METHOD 1, 2, 3 OR 4 SHALL BE USED TO PROVIDE TEMPORARY COVER IN THESE AREAS AS APPROPRIATE.

16. THE NORMAL WETTED PERIMETER OF ANY TEMPORARY OR PERMANENT DRAINAGE DITCH THAT DRAINS WATER FROM THE CONSTRUCTION SITE, OR DIVERTS WATER AROUND THE CONSTRUCTION SITE, SHALL BE STABILIZED WITHIN 200 FEET OF THE SITE DISCHARGE POINT. STABILIZATION SHALL OCCUR WITHIN 24 HOURS OF CONNECTION TO A SURFACE WATER, EXISTING GUTTER, STORM SEWER INLET, DRAINAGE DITCH OR OTHER STORMWATER CONVEYANCE SYSTEM ACCORDING TO SPEC 1717.2A2. RAPID STABILIZATION METHOD 4 SHALL BE USED TO STABILIZE THESE AREAS. THE REMAINDER OF THE DITCH SHALL BE STABILIZED WITHIN 7 DAYS OF CONNECTION TO THE SURFACE WATER. PERMANENT EROSION CONTROL BLANKET OR RAPID STABILIZATION METHOD 4 WILL BE USED TO STABILIZE THESE AREAS. THE IMPLEMENTATION OF DISC ANCHORED MULCH AND HYDRAULIC SOIL STABILIZER IS NOT ACCEPTABLE FOR PERMANENT DITCH STABILIZATION.

17. SITE DRAINAGE OUTLETS CONNECTED TO SURFACE WATERS SHALL BE STABILIZED WITH APPROPRIATE ENERGY DISSIPATION WITHIN 24 HOURS OF COMPLETION.

18. EXPOSED SOIL AREAS WILL BE STABILIZED PRIOR TO THE ONSET OF WINTER. ANY OPEN SOIL REMAINING WILL BE SNOW MULCHED, SEEDED, OR BLANKETED WITHIN THE TIME FRAMES IN THE NPDES PERMIT.

19. ALL TOPSOIL BERMS SHALL BE STABILIZED AS FOLLOWS:
   - A. BETWEEN APRIL 1 - AUGUST 31, SEED WITH SEED MIXTURE 150
   - B. BETWEEN SEPTEMBER 1 AND MARCH 31, SEED WITH SEED MIXTURE 150 AND TOP WITH RAPID STABILIZATION 2.

20. THE CONTRACTOR SHALL COMPLY WITH THE FOLLOWING INSPECTION AND MAINTENANCE REQUIREMENTS:
   - A. SILT FENCE MUST BE REPAIRED, REPLACED OR SUPPLEMENTED WHEN IT BECOMES NON-FUNCTIONAL OR SEDIMENT REACHES 1/3 THE HEIGHT OF THE SILT FENCE. REPAIRS MUST BE MADE WITHIN 24 HOURS OF DISCOVERY
   - B. INLET PROTECTION DEVICES SHOULD BE REPAIRED WHEN THEY BECOME NON-FUNCTIONAL OR SEDIMENT REACHES 1/3 THE HEIGHT AND/OR DEPTH OF THE DEVICE
   - C. TEMPORARY SEDIMENT BASIN SHALL HAVE SEDIMENT REMOVED ONCE THE SEDIMENT HAS REACHED 1/2 THE STORAGE VOLUME WITHIN 72 HOURS OF DISCOVERY
   - D. SEDIMENT TRACKED TO PAVED SURFACES MUST BE REMOVED WITHIN 24 HOURS OF DISCOVERY .
   - E. ALL NONFUNCTIONAL BMPS MUST BE REPAIRED, REPLACED, OR SUPPLEMENTED WITHIN 24 HOURS OF DISCOVERY
   - F. CONTRACTOR IS RESPONSIBLE FOR MAINTAINING ALL BMPS UNTIL WORK HAS BEEN COMPLETED, SITE HAS GONE UNDER FINAL STABILIZATION, AND THE NOTICE OF TERMINATION HAS BEEN SUBMITTED TO THE MPCA IN ACCORDANCE WITH PART II.B.5 OF THE CONSTRUCTION GENERAL PERMIT.

21. IF SEDIMENT DEPOSITION OCCURS IN A WATER OF THE STATE DUE TO THIS PROJECT, THE MATERIAL SHALL BE REMOVED WITHIN 7 DAYS.

22. PAVEMENT SURFACES SHALL BE SWEPT WITHIN 24 HOURS OF DISCOVERY OF SEDIMENT OR TRACKING ONTO PAVEMENT THAT DRAINS TO CURB, INLETS, DITCHES OR PONDS. PAVEMENT SHALL BE LIGHTLY WETTED PRIOR TO SWEEPING ACTIVITIES. THIS WORK IS INCIDENTAL TO THE PROJECT.

23. TEMPORARY DEWATERING ACTIVITIES WILL LIKELY BE REQUIRED FOR THE ROADWAY CONSTRUCTION AND STORM SEWER WORK. THEREFORE A PERMIT FOR THE TEMPORARY APPROPRIATION OF WATERS OF THE STATE, FROM MNDNR WILL LIKELY BE REQUIRED FOR THIS PROJECT. THE CONTRACTOR WILL BE RESPONSIBLE FOR OBTAINING THE PERMIT. ALL TEMPORARY DEWATERING SHALL BE DISCHARGED TO AN APPROVED LOCATION FOR TREATMENT PRIOR TO DISCHARGE TO ANY RECEIVING WATER. THE CONTRACTOR IS REQUIRED TO SUBMIT SITE PLANS INCLUDING DEWATERING ACTIVITIES TO THE MN/DOT CONSTRUCTION ENGINEER FOR APPROVAL PRIOR TO COMMENCING WORK (SPEC 1717.2E).

24. TURBID OR SEDIMENT LADEN WATER SHALL BE DISCHARGED TO TEMPORARY SEDIMENT BASINS WHENEVER POSSIBLE. IN THE EVENT THAT IT IS NOT POSSIBLE TO DISCHARGE THE SEDIMENT LADEN WATER TO A TEMPORARY SEDIMENT BASIN THE WATER SHALL BE TREATED SO THAT IT DOES NOT CAUSE A NUISANCE CONTION IN THE RECEIVING WATERS OR TO DOWNSTREAM LANDOWNERS.

25. IT IS THE DESIGNER'S INTENT THAT THE CONTRACTOR BUILD PONDS AND INSTALL EROSION CONTROL BEFORE PUTTING THEM INTO ACTIVE SERVICE TO THE MAXIMUM EXTENT PRACTICABLE. ALL PONDS FOR THE PROJECT WILL BE SUBJECT TO THE SITE PLAN REQUIREMENT AREA EROSION CONTROL SCHEDULE AS PER SPEC 1717.

26. THE CONTRACTOR SHALL NOT DRIVE ANY EQUIPMENT ON FINISHED POND BOTTOMS OR POND CORNERS. IF DISTURBED, POND BOTTOM AND POND CORNERS SHALL BE RESTORED TO PRE-EXISTING CONDITIONS WITHIN 24 HOURS. ANY RUTS OR DAMAGED TURF THAT COULD CREATE SEDIMENT DISCHARGE TO POND BOTTOMS SHALL BE REPAIRED WITHIN 24 HOURS.

27. ANY SUBSURFACE DRAINAGE TILES DAMAGED DURING CONSTRUCTION SHALL BE REPAIRED, REPLACED OR REROUTED, AND CONNECTED TO THE EXISTING TILE OR DRAINAGE SYSTEM TO ENSURE THAT EXISTING UPLAND DRAINAGE SYSTEM IS PERPETUATED. THIS SHALL BE ACCOMPLISHED TO THE APPROVAL AND SATISFACTION OF THE ENGINEER.

I HEREBY CERTIFY THAT THIS SHEET HAS BEEN PREPARED BY ME OR UNDER MY DIRECT SUPERVISION AND THAT I AM A DULY LICENSED PROFESSIONAL ENGINEER UNDER THE LAWS OF THE STATE OF MINNESOTA.
PRINTED NAME: SCOTT CARLSTROM LICENSE# 23344
DATE: 6/14/12 SIGNATURE: Scott Carlstrom
Licensed Professional Engineer

S.P. 179-020-031 S.P. 019-605-028

SHEET 2 OF 3

STORM WATER POLLUTION PREVENTION PLAN NARRATIVE

DRAWN BY: RDC | CHECKED BY: JMH

STATE PROJ. NO. 1901-148 (T.H. 13) SHEET NO. 429 OF 442 SHEETS

DISTRICT #: METRO
IPLOT NAME: WRENOTES_SWPPP_FINAL
PATH & FILENAME: Projects/DM_ROS/013/1901/148/Design/Hydraulics/WRENOTES_SWPPP_FINAL.dgn
PLOTTED/REVISED: 12-JUN-2012 07:35

WATER RESOURCES NOTES

THE WATER RESOURCES PROJECT NOTES ALONG WITH THE STORMWATER POLLUTION PREVENTION PLAN (SWPPP) NARRATIVE PROVIDE DESIGN INFORMATION FOR CRITICAL DRAINAGE FEATURES. FAILURE TO BUILD THE PROJECT HYDRAULIC AMENITIES AS DESIGNED MAY LEAD TO ADVERSE IMPACTS UPON NATURAL RESOURCE AMENITIES AS WELL AS COMPROMISED HYDRAULIC PERFORMANCE.

1. THE CAPACITY AND SIZE OF STORM SEWER PIPES, INLETS, AND VARIOUS HYDRAULIC STRUCTURES OR FEATURES (INCLUDING MANHOLES AND WEIR OVERFLOW DEVICES) HAVE BEEN SELECTED TO CONFORM TO MN/DOT STANDARDS AND MINNESOTA POLLUTION CONTROL AGENCY (MPCA) AND WATERSHED DISTRICT PERMIT REQUIREMENTS. THE DESIGN COMPUTATIONS ARE ON FILE AT MN/DOT METRO WATER RESOURCES ENGINEERING (WRE).
2. THE FOLLOWING WATER RESOURCE PERMITS APPLY TO THIS PROJECT:
   A. NPDES - THE PERMIT APPLICATION FORM HAS BEEN COMPLETED BY DAKOTA COUNTY. THE CONTRACTOR IS RESPONSIBLE FOR COMPLETING THE REMAINDER OF THE FORM AND SUBMITTING IT TO THE MPCA PRIOR TO COMMENCING WORK.
   B. WATERSHED DISTRICT - THE LOWER MINNESOTA RIVER WATERSHED HAS SPECIFIC CONCERNS FOR THIS PROJECT. SEE PERMIT FOR COMPLETE LIST OF CONDITIONS.
3. ALL DISTURBED GREEN SPACES SHALL HAVE SUBSOIL PER SPECIFICATION 2105.3 G.
4. MN/DOT POLICY IS TO PERPETUATE EXISTING DRAINAGE PATTERNS AS MUCH AS POSSIBLE. THIS PROJECT HAS BEEN DESIGNED TO DO THAT. IF THE CONTRACTOR PROPOSES TO ALTER THE DRAINAGE PATTERNS SHOWN ON THE PLANS OR DIVERT DRAINAGE RELATIVE TO WHAT IS INDICATED ON THE PLANS THE ENGINEER AND/OR WATER RESOURCES ENGINEER SHALL BE CONTACTED AND MUST FIRST REVIEW THE PROPOSED CHANGES AND APPROVE IF ACCEPTABLE.
5. STRUCTURE 5417 IS THE OUTLET FOR THE RELOCATED/RECONSTRUCTED CSAH 5 STORM SEWER, AND IT DISCHARGES TO BURNSVILLE'S REGIONAL STORM WATER POND TO BE CONSTRUCTED BY BURNSVILLE. THE POND MAY OR MAY NOT BE COMPLETED BY THE TIME THE CSAH 5 SEWER SYSTEM IS READY TO BE USED. TO ADDRESS THIS POSSIBILITY, A TEMPORAY DRAINAGE DIVERSION HAS BEEN INCORPORATED INTO THE PLANS. THE TEMPORARY DIVERSION RUNS FROM STRUCTURE 5416 TO STRUCTURE 5420 AND THEN TO STRUCTURE 5421. DURING THE POSSIBLE DIVERSION TIME PERIOD THE PERMANENT OUTLET FOR STRUCTURE 5416 GOING TO STRUCTURE 5417 SHALL BE BULKHEADED IN THE NORTH WALL OF 5416 AS DIRECTED BY THE ENGINEER. WHEN THE REGIONAL POND IS FINISHED, THEN THE BULKHEAD SHALL BE REMOVED AS DIRECTED BY THE ENGINEER AND THE TEMPORARY DIVERSION: STRUCTURE 5416, 5420 AND 5421 WILL BE ABANDONED AS DIRECTED BY THE ENGINEER.
6. PERMANENT EROSION CONTROL ITEMS SUCH AS RIP-RAP AT THE RELOCATED CSAH 5 SEWER OUTFALL (STRUCTURE 517) IS TO BE PROVIDED BY BURNSVILLE AS PART OF THE REGIONAL POND PROJECT.

I HEREBY CERTIFY THAT THIS SHEET HAS BEEN PREPARED BY ME OR UNDER MY DIRECT SUPERVISION AND THAT I AM A DULY LICENSED PROFESSIONAL ENGINEER UNDER THE LAWS OF THE STATE OF MINNESOTA.

PRINTED NAME: SCOTT CARLSTROM LICENSE# 23344

DATE: 6/18/12 SIGNATURE: Scott Carlstrom
Licensed Professional Engineer

S.P. 179-020-031 S.P. 019-605-028

WATER RESOURCES NOTES AND STORM WATER POLLUTION PLAN NARRATIVE

DRAWN BY: RDC | CHECKED BY: JMH

STATE PROJ. NO. 1901-148 (T.H. 13) SHEET NO. 430 OF 442 SHEETS

DISTRICT #: METRO
PLOT NAME: WRENOTES_SWPPP_FINAL
PATH & FILENAME: Projects/DM_ROS/013/1901/148/Design/Hydraulics/WRENOTES_SWPPP_FINAL.dgn
PLOTTED/REVISED: 12-JUN-2012 07:36

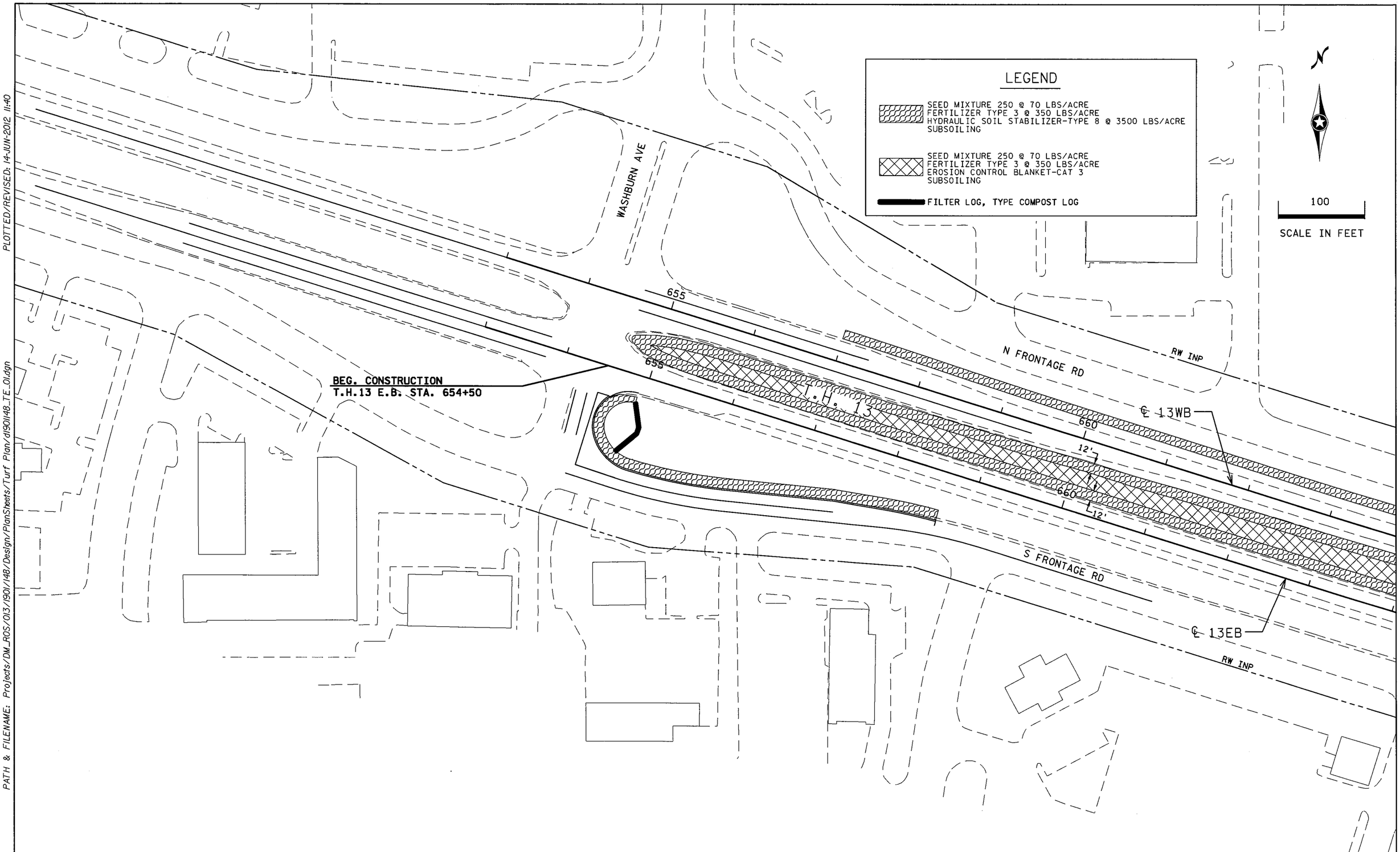

PLOTTED/REVISED: 14-JUN-2012 11:40

DISTRICT #: METRO
IPLOT NAME: d1901148_TE_01
PATH & FILENAME: Projects/DM_ROS/013/1901/148/Design/PlanSheets/Turf Plan/d1901148_TE_01.dgn

S.P. 179-020-031 S.P. 019-605-028

SHEET 1 OF 8

TURF ESTABLISHMENT & EROSION CONTROL PLANS

DRAWN BY: MRS	CHECKED BY: HS	CERTIFIED BY [signature] LICENSED PROFESSIONAL ENGINEER	LIC. NO. 18520 DATE 6/18/12	STATE PROJ. NO. 1901-148 (T.H. 13)	SHEET NO. 431 OF 442 SHEETS

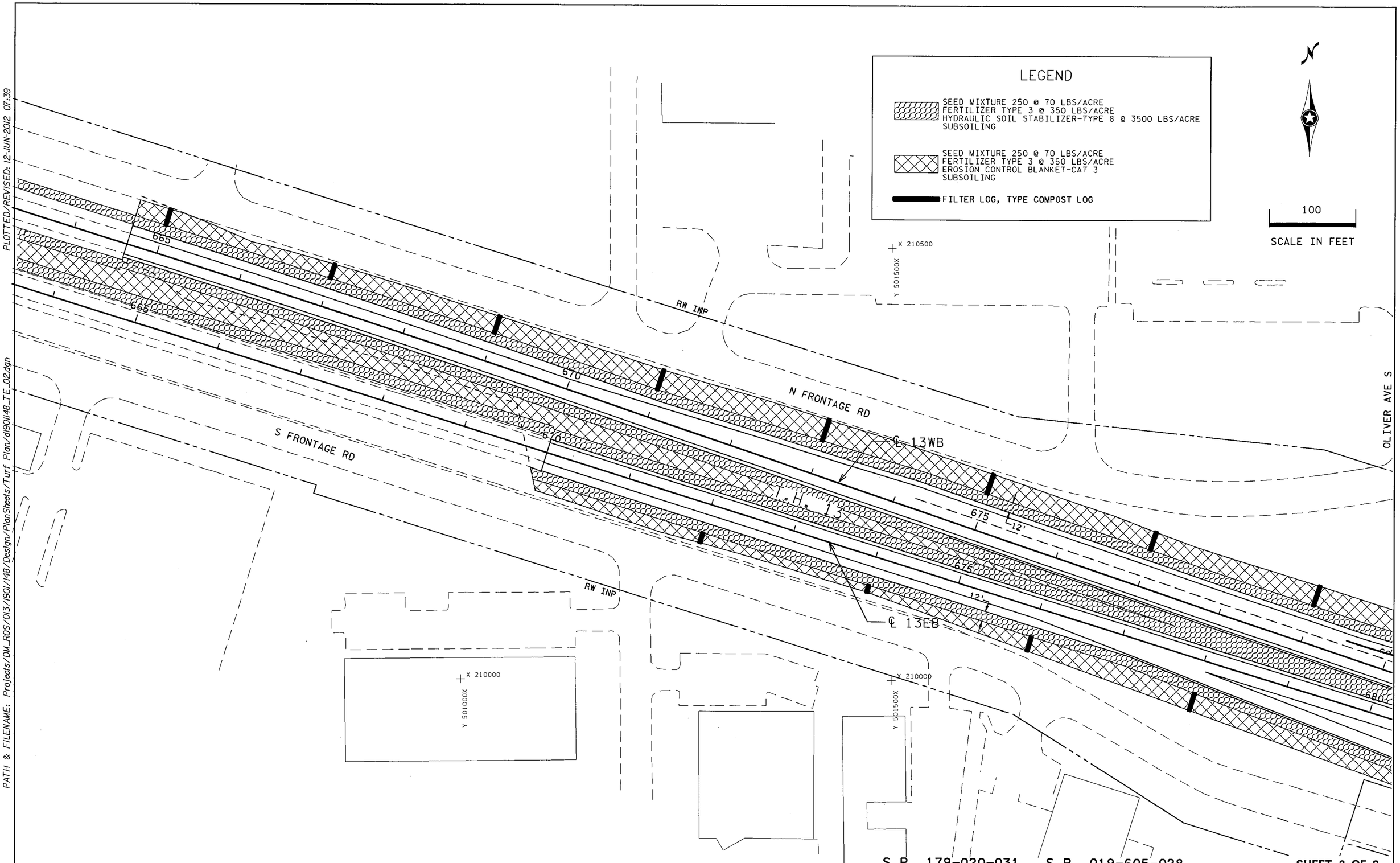

S.P. 179-020-031 S.P. 019-605-028

SHEET 2 OF 8

TURF ESTABLISHMENT & EROSION CONTROL PLANS

DRAWN BY: MRS	CHECKED BY: HS	CERTIFIED BY _____ LICENSED PROFESSIONAL ENGINEER LIC. NO. 18520 DATE 6/18/12	STATE PROJ. NO. 1901-148 (T.H. 13) SHEET NO. 432 OF 442 SHEETS

DISTRICT #: METRO
IPLOT NAME: d190ll48_TE_02
PATH & FILENAME: Projects/DM_ROS/013/1901/148/Design/PlanSheets/Turf Plan/d190ll48_TE_02.dgn
PLOTTED/REVISED: 12-JUN-2012 07:39

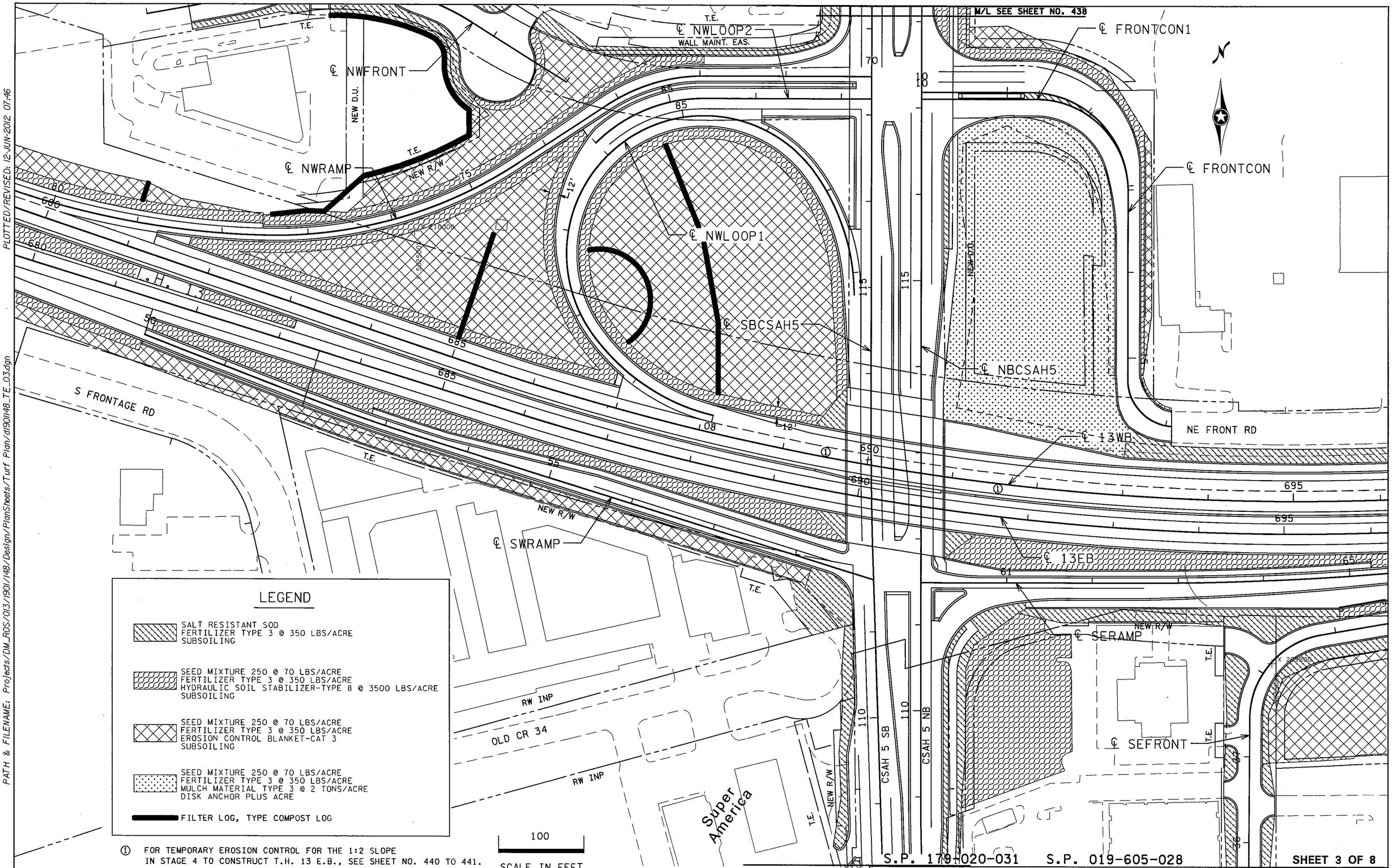

① FOR TEMPORARY EROSION CONTROL FOR THE 1:2 SLOPE IN STAGE 4 TO CONSTRUCT T.H. 13 E.B., SEE SHEET NO. 440 TO 441.

S.P. 179-020-031 S.P. 019-605-028 SHEET 3 OF 8

TURF ESTABLISHMENT & EROSION CONTROL PLANS

DRAWN BY: MRS	CHECKED BY: HS	CERTIFIED BY [signature] LICENSED PROFESSIONAL ENGINEER	LIC. NO. 18520 DATE 6/18/12	STATE PROJ. NO. 1901-148 (T.H. 13) SHEET NO. 433 OF 442 SHEETS

PLOTTED/REVISED: 12-JUN-2012 07:46

DISTRICT #: METRO
IPLOT NAME: d1901148_TE_03
PATH & FILENAME: Projects/DM_ROS/013/1901/148/Design/PlanSheets/Turf Plan/d1901148_TE_03.dgn

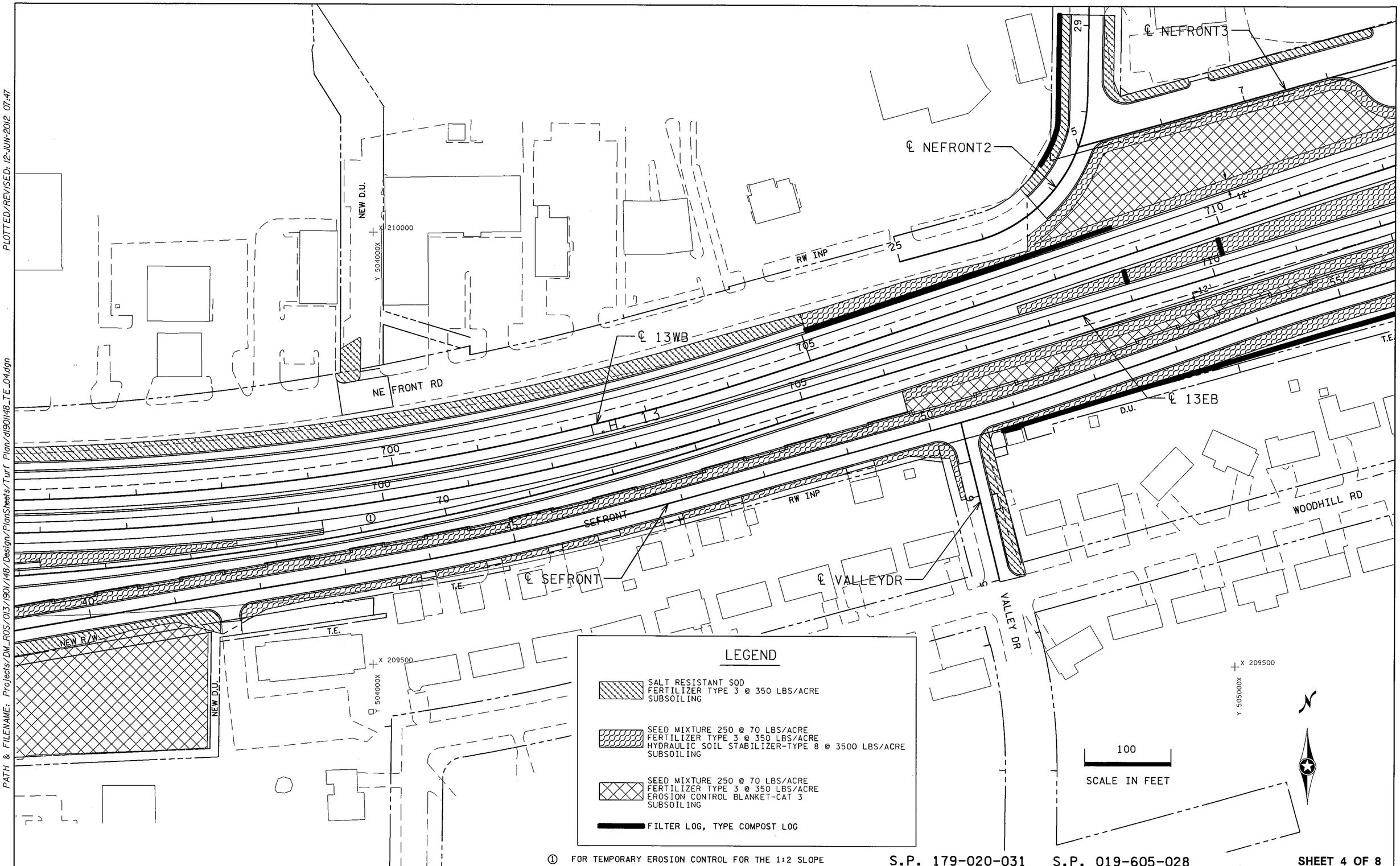

① FOR TEMPORARY EROSION CONTROL FOR THE 1:2 SLOPE IN STAGE 3 TO CONSTRUCTION OF RWALL5, SEE SHEET NO. 439.

S.P. 179-020-031 S.P. 019-605-028

SHEET 4 OF 8

TURF ESTABLISHMENT & EROSION CONTROL PLANS

DRAWN BY: MRS	CHECKED BY: HS	CERTIFIED BY [signature] LICENSED PROFESSIONAL ENGINEER	LIC. NO. 18520 DATE 6/18/12	STATE PROJ. NO. 1901-148 (T.H. 13)	SHEET NO. 434 OF 442 SHEETS

PLOTTED/REVISED: 12-JUN-2012 07:47

DISTRICT #: METRO
IPLOT NAME: d1901148_TE_04
PATH & FILENAME: Projects/DM_ROS/013/1901/148/Design/PlanSheets/Turf Plan/d1901148_TE_04.dgn

PLOTTED/REVISED: 12-JUN-2012 07:48
DISTRICT #: METRO
IPLOT NAME: d1901148_TE_05
PATH & FILENAME: Projects/DM_ROS/013/1901/148/Design/PlanSheets/Turf Plan/d1901148_TE_05.dgn

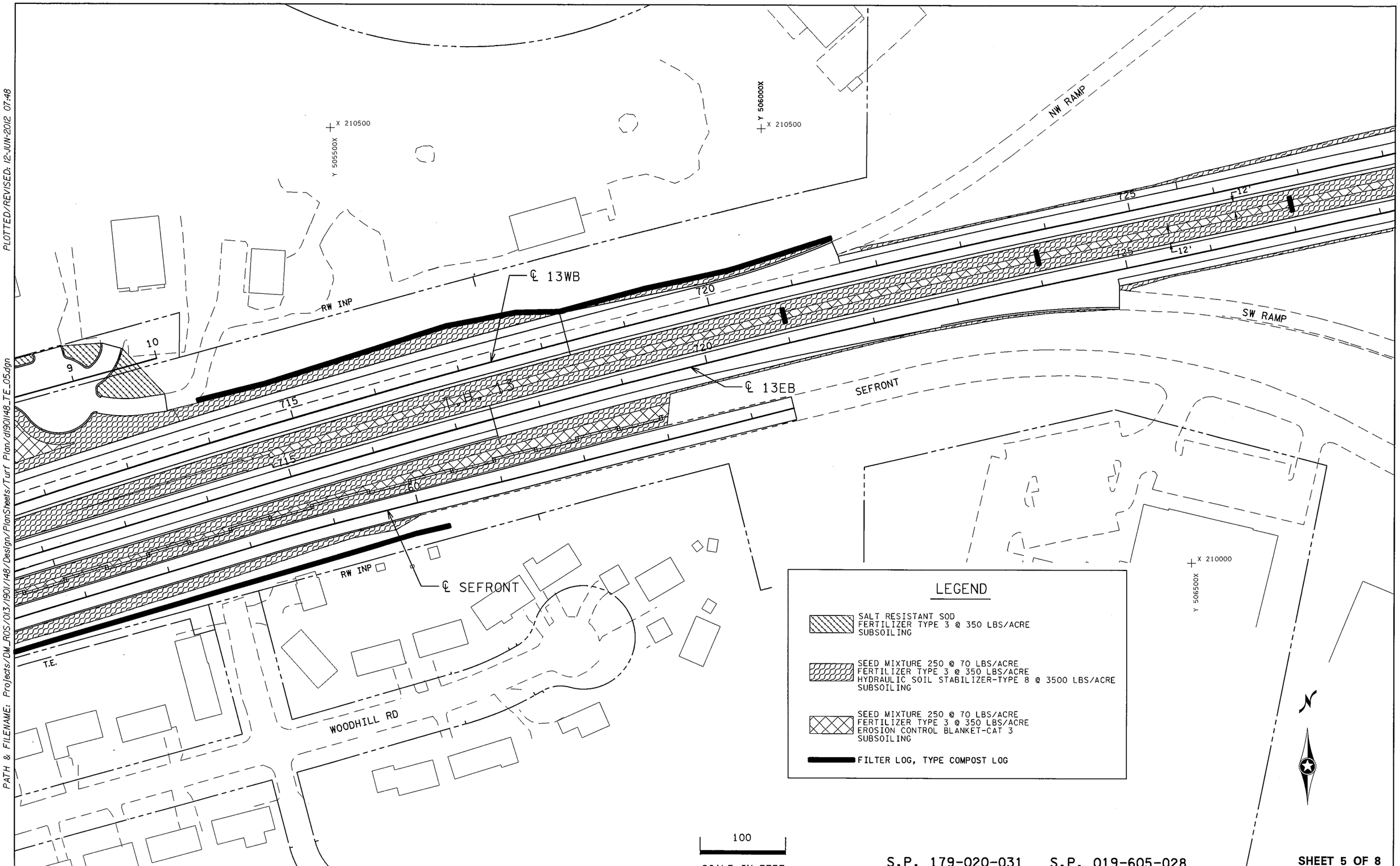

LEGEND

- SALT RESISTANT SOD
  FERTILIZER TYPE 3 @ 350 LBS/ACRE
  SUBSOILING
- SEED MIXTURE 250 @ 70 LBS/ACRE
  FERTILIZER TYPE 3 @ 350 LBS/ACRE
  HYDRAULIC SOIL STABILIZER-TYPE 8 @ 3500 LBS/ACRE
  SUBSOILING
- SEED MIXTURE 250 @ 70 LBS/ACRE
  FERTILIZER TYPE 3 @ 350 LBS/ACRE
  EROSION CONTROL BLANKET-CAT 3
  SUBSOILING
- FILTER LOG, TYPE COMPOST LOG

S.P. 179-020-031 S.P. 019-605-028

SHEET 5 OF 8

TURF ESTABLISHMENT & EROSION CONTROL PLANS

DRAWN BY: MRS	CHECKED BY: HS	CERTIFIED BY _____ LICENSED PROFESSIONAL ENGINEER LIC. NO. 18520 DATE 6/18/12	STATE PROJ. NO. 1901-148 (T.H. 13)	SHEET NO. 435 OF 442 SHEETS

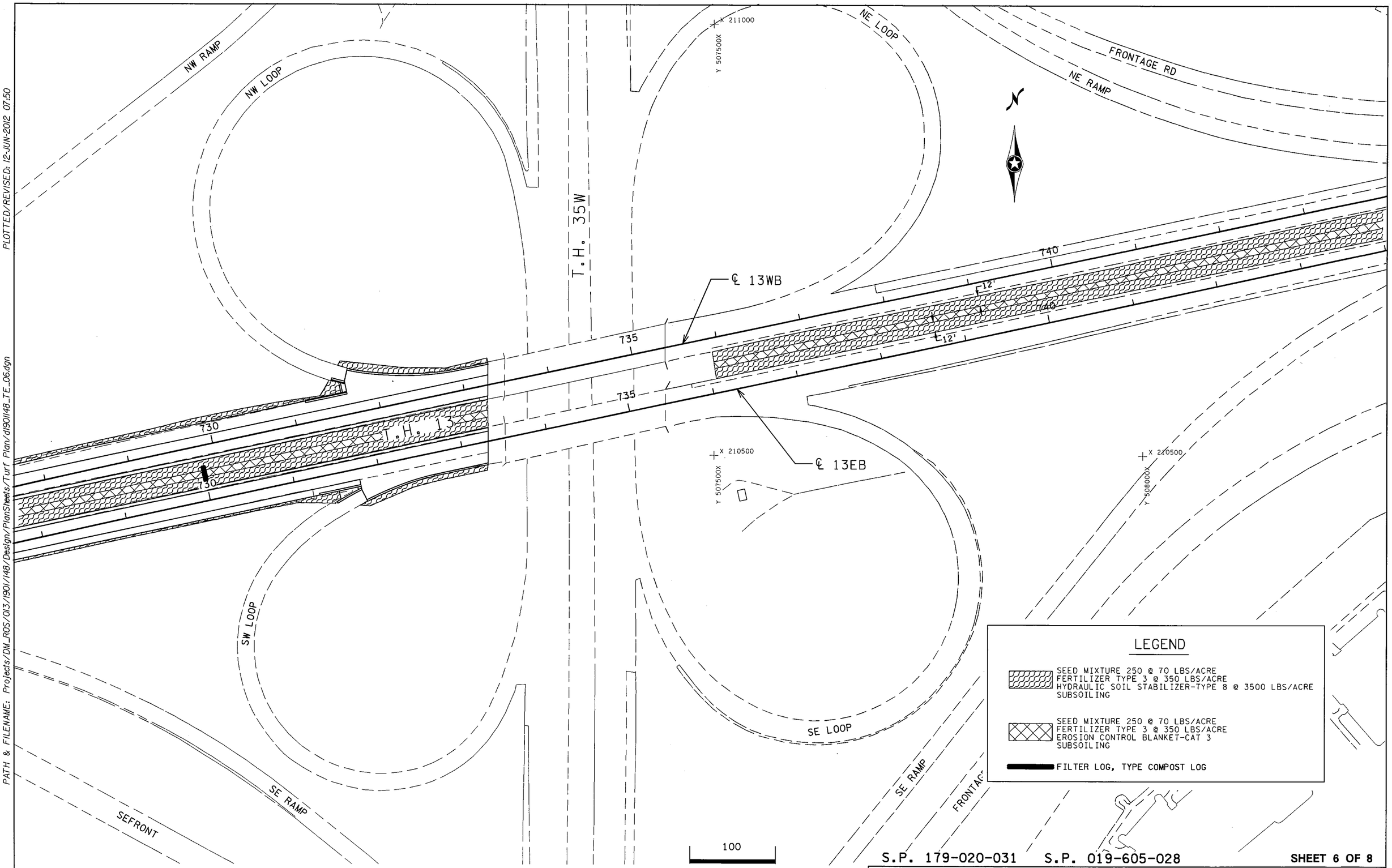

PLOTTED/REVISED: 12-JUN-2012 07:50

DISTRICT #: METRO
IPLOT NAME: d1901148_TE_06
PATH & FILENAME: Projects/DM_ROS/013/1901/148/Design/PlanSheets/Turf Plan/d1901148_TE_06.dgn

S.P. 179-020-031 S.P. 019-605-028 SHEET 6 OF 8

TURF ESTABLISHMENT & EROSION CONTROL PLANS

DRAWN BY: MRS	CHECKED BY: HS	CERTIFIED BY [signature] LICENSED PROFESSIONAL ENGINEER	LIC. NO. 18520 DATE 6/18/12	STATE PROJ. NO. 1901-148 (T.H. 13) SHEET NO. 436 OF 442 SHEETS

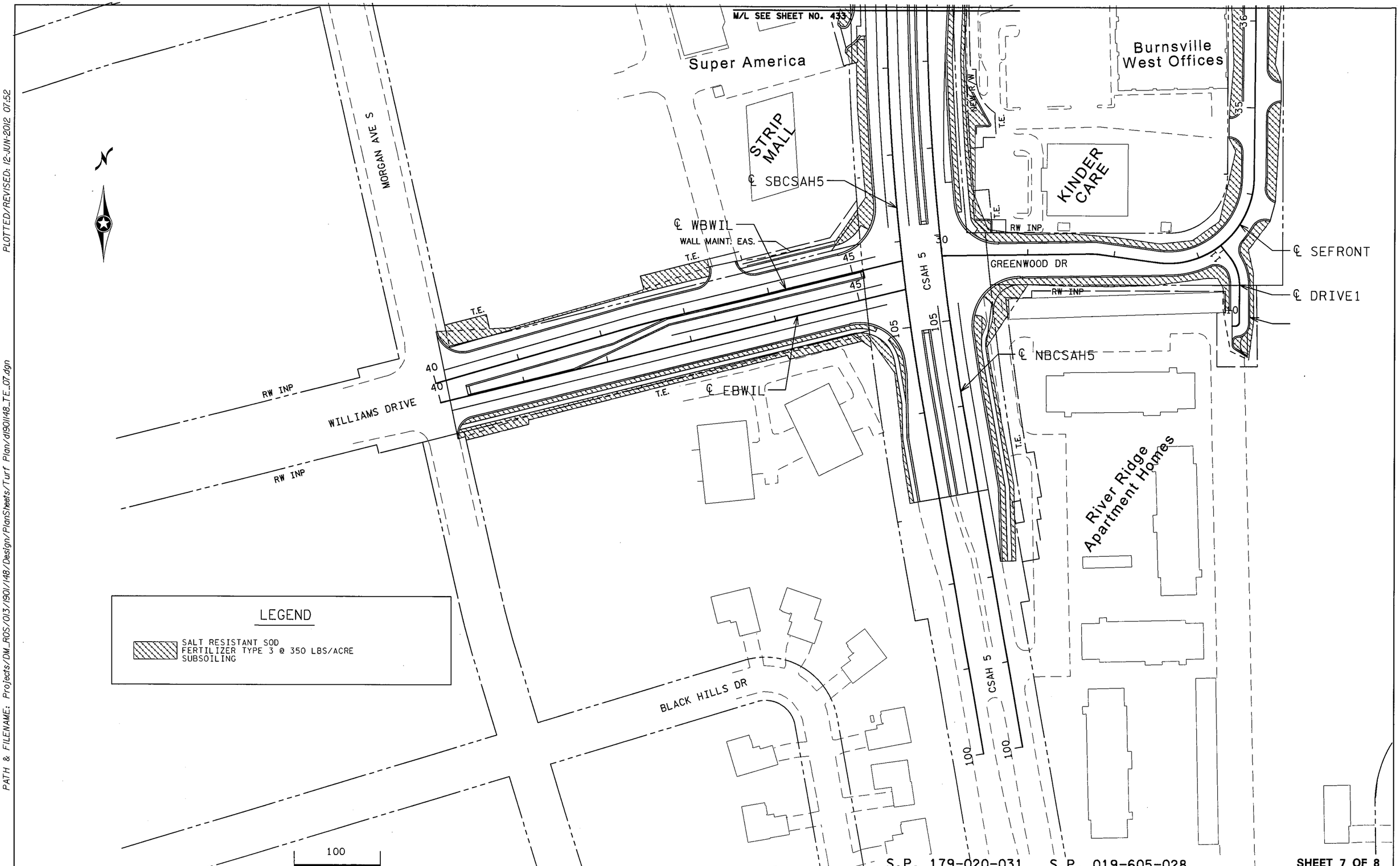

PLOTTED/REVISED: 12-JUN-2012 07:52

DISTRICT #: METRO
IPLOT NAME: d1901148_TE_07
PATH & FILENAME: Projects/DM_ROS/013/1901/148/Design/PlanSheets/Turf Plan/d1901148_TE_07.dgn

TURF ESTABLISHMENT & EROSION CONTROL PLANS

DRAWN BY: GLJ	CHECKED BY: HS	CERTIFIED BY [signature] LICENSED PROFESSIONAL ENGINEER	LIC. NO. 18520 DATE 6/18/12	STATE PROJ. NO. 1901-148 (T.H. 13) SHEET NO. 437 OF 442 SHEETS

PLOTTED/REVISED: 12-JUN-2012 14:51
DISTRICT #: METRO
IPLOT NAME: d1901148_TE_08
PATH & FILENAME: Projects/DM_ROS/013/1901/148/Design/PlanSheets/Turf Plan/d1901148_TE_08.dgn

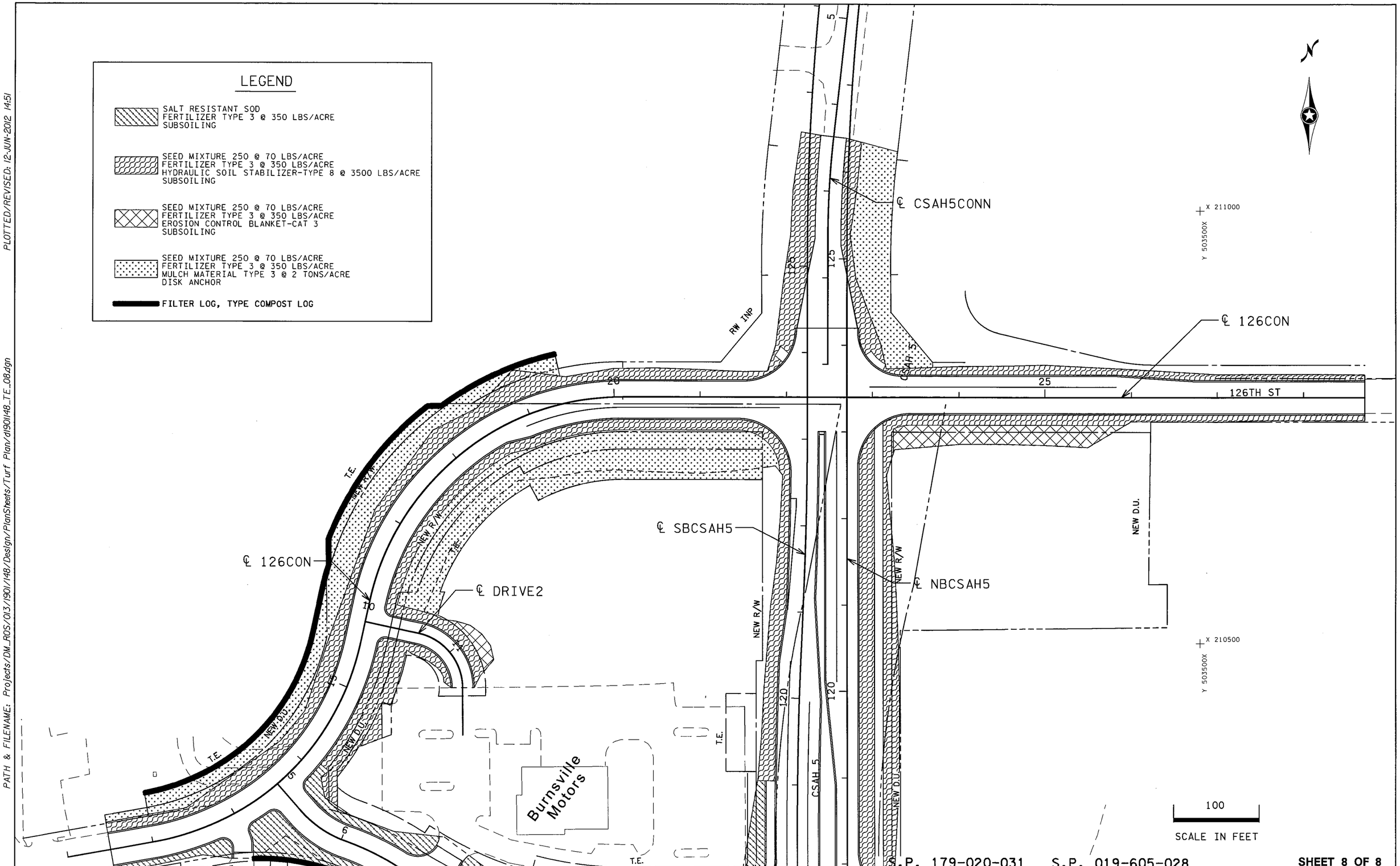

S.P. 179-020-031 S.P. 019-605-028

SHEET 8 OF 8

TURF ESTABLISHMENT & EROSION CONTROL PLANS

DRAWN BY: MRS	CHECKED BY: HS	CERTIFIED BY LICENSED PROFESSIONAL ENGINEER LIC. NO. 18520 DATE 6/18/12	STATE PROJ. NO. 1901-148 (T.H. 13)	SHEET NO. 438 OF 442 SHEETS

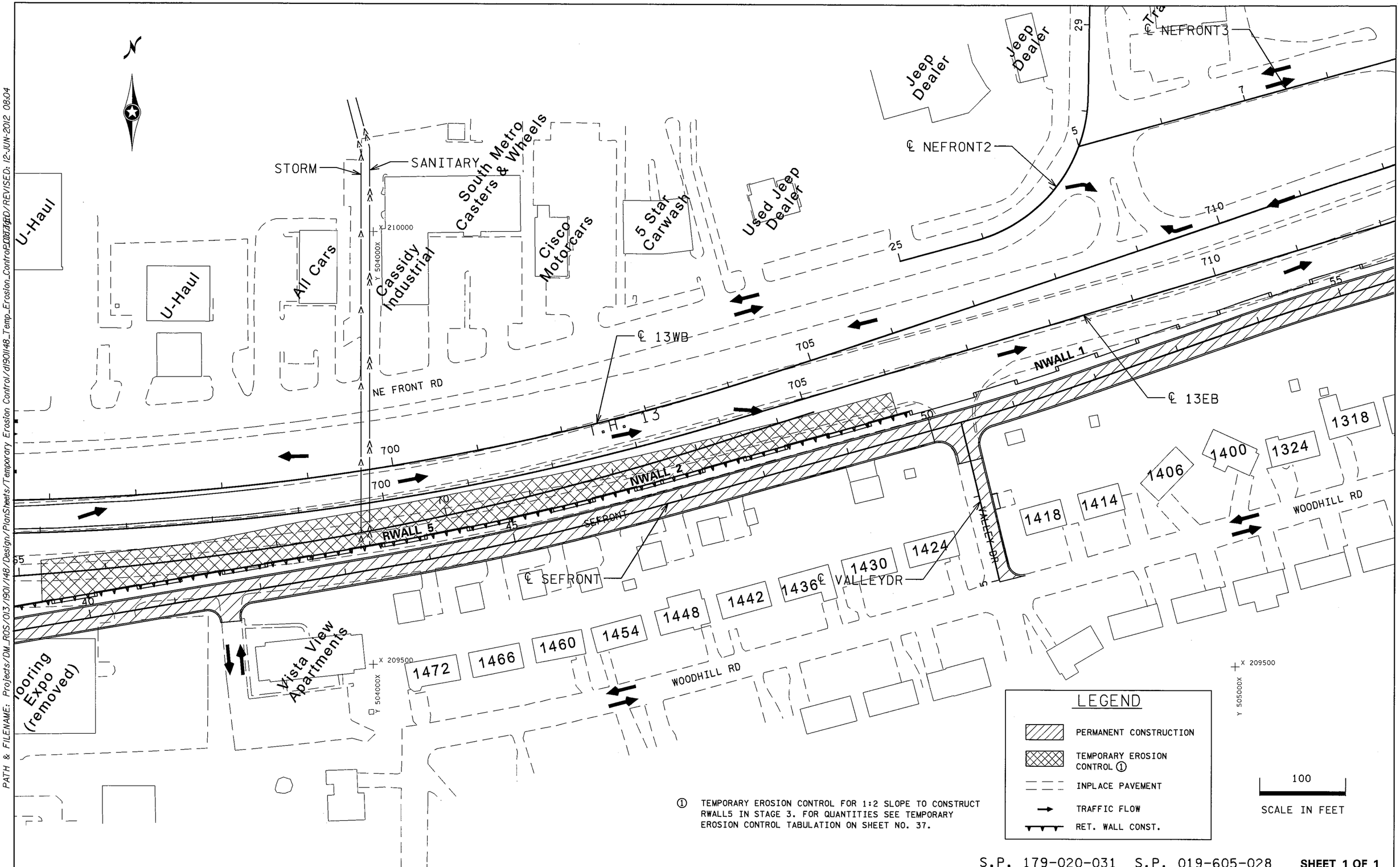

① TEMPORARY EROSION CONTROL FOR 1:2 SLOPE TO CONSTRUCT RWALL5 IN STAGE 3. FOR QUANTITIES SEE TEMPORARY EROSION CONTROL TABULATION ON SHEET NO. 37.

S.P. 179-020-031 S.P. 019-605-028 **SHEET 1 OF 1**

TEMPORARY EROSION CONTROL NO. 1

DRAWN BY: MRS	CHECKED BY: HS	CERTIFIED BY [signature] LICENSED PROFESSIONAL ENGINEER	LIC. NO. 18520 DATE 6/18/12	STATE PROJ. NO. 1901-148 (T.H. 13)	SHEET NO. 439 OF 442 SHEETS

DISTRICT #: METRO
IPLOT NAME: d1901148_Temp_Erosion_Control_01a
PATH & FILENAME: Projects/DM_ROS/013/1901/148/Design/PlanSheets/Temporary Erosion Control/d1901148_Temp_Erosion_Control_01a.dgn
PLOT DATE/REVISED: 12-JUN-2012 08:04

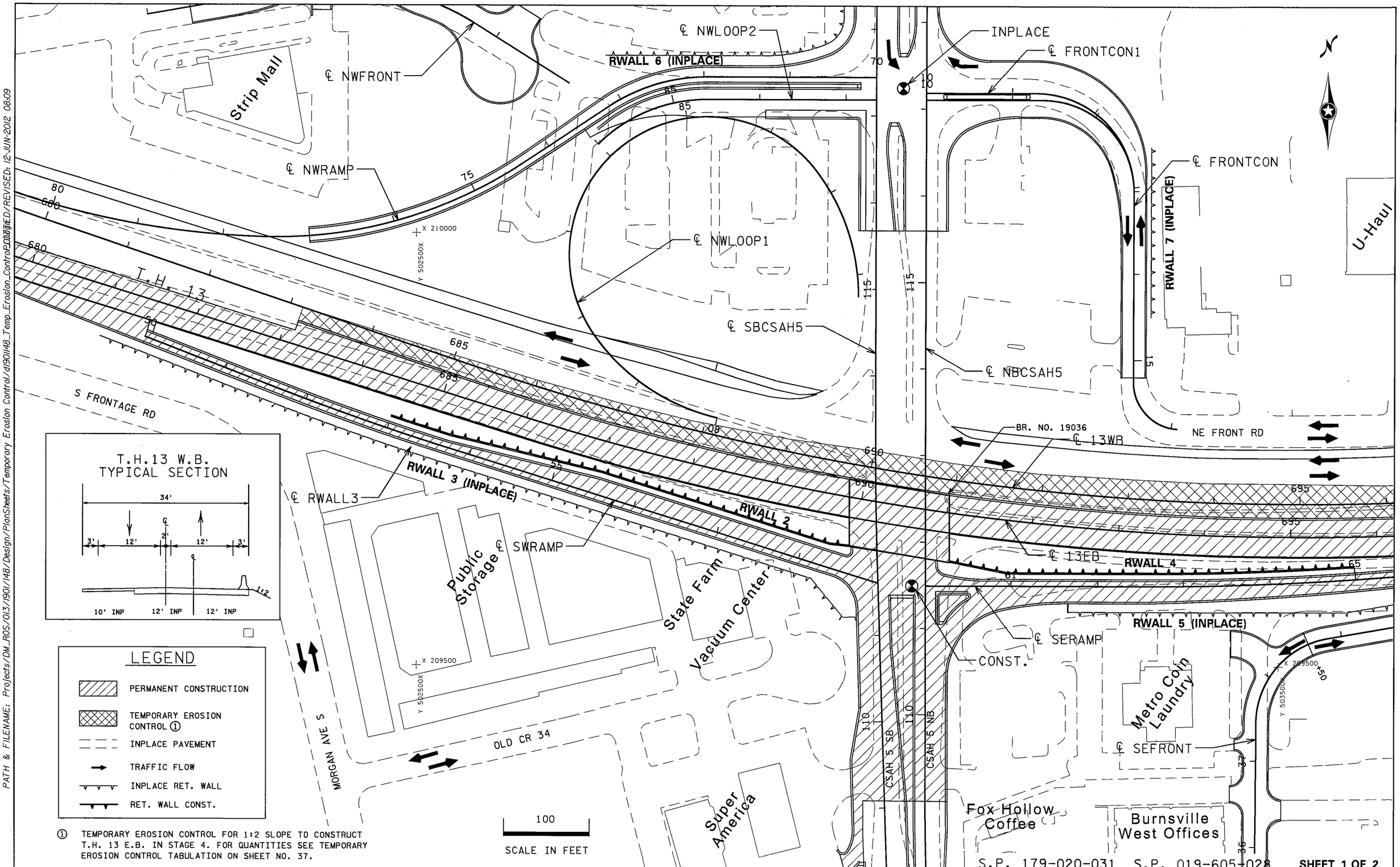

① TEMPORARY EROSION CONTROL FOR 1:2 SLOPE TO CONSTRUCT T.H. 13 E.B. IN STAGE 4. FOR QUANTITIES SEE TEMPORARY EROSION CONTROL TABULATION ON SHEET NO. 37.

S.P. 179-020-031 S.P. 019-605-028 SHEET 1 OF 2

TEMPORARY EROSION CONTROL NO. 2

DRAWN BY: MRS	CHECKED BY: HS	CERTIFIED BY [signature] LICENSED PROFESSIONAL ENGINEER	LIC. NO. 18520 DATE 6/18/12	STATE PROJ. NO. 1901-148 (T.H. 13)	SHEET NO. 440 OF 442 SHEETS

DISTRICT #: METRO
IPLOT NAME: d1901148_Temp_Erosion_Control_01
PATH & FILENAME: Projects/DM_ROS/013/1901/148/Design/PlanSheets/Temporary Erosion Control/d1901148_Temp_Erosion_ControlPLOT.dgn
PLOTTED/REVISED: 12-JUN-2012 08:09

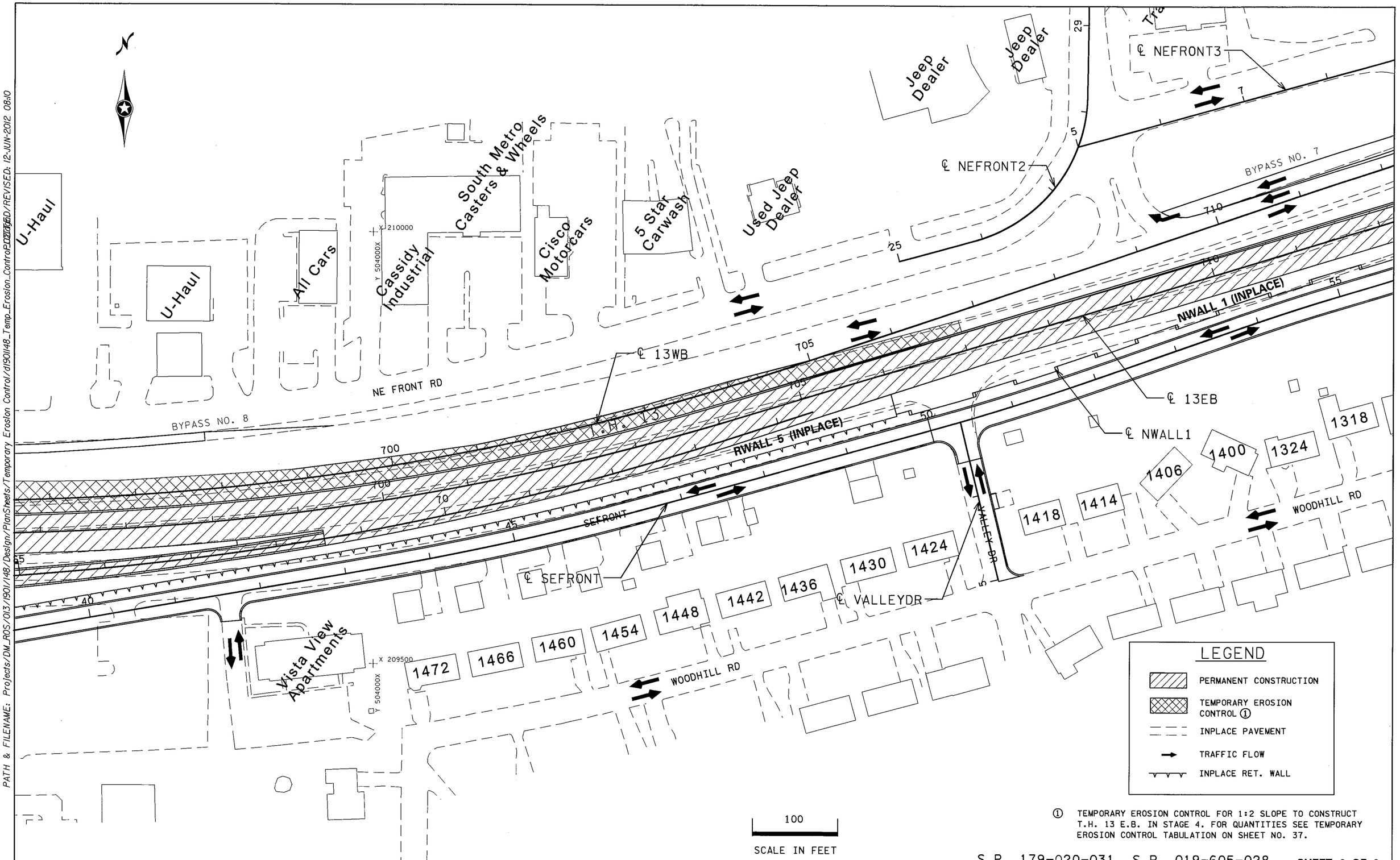

① TEMPORARY EROSION CONTROL FOR 1:2 SLOPE TO CONSTRUCT T.H. 13 E.B. IN STAGE 4. FOR QUANTITIES SEE TEMPORARY EROSION CONTROL TABULATION ON SHEET NO. 37.

S.P. 179-020-031 S.P. 019-605-028 **SHEET 2 OF 2**

TEMPORARY EROSION CONTROL NO. 2

DRAWN BY: MRS	CHECKED BY: HS	CERTIFIED BY [signature] LICENSED PROFESSIONAL ENGINEER	LIC. NO. 18520 DATE 6/18/12	STATE PROJ. NO. 1901-148 (T.H. 13)	SHEET NO. 441 OF 442 SHEETS

DISTRICT #: METRO
IPLOT NAME: d1901148_Temp_Erosion_Control_02
PATH & FILENAME: Projects/DM_ROS/013/1901/148/Design/PlanSheets/Temporary Erosion Control/d1901148_Temp_Erosion_Control_02.dgn
PLOTTED/REVISED: 12-JUN-2012 08:10

DISTRICT #: METRO
IPLOT NAME: d1901148_dderos
PATH & FILENAME: Projects/DM_ROS/013/1901/148/Design/PlanSheets/Standard Plans/d1901148_dderos.dgn
PLOTTED/REVISED: 12-JUN-2012 08:13

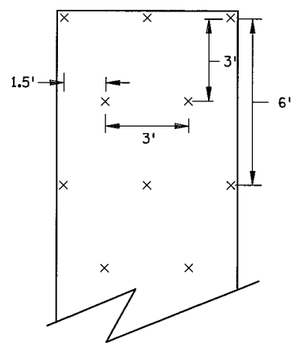

SLOPES FLATTER THAN 1:2
(1.2 STAPLES PER SQ YD)

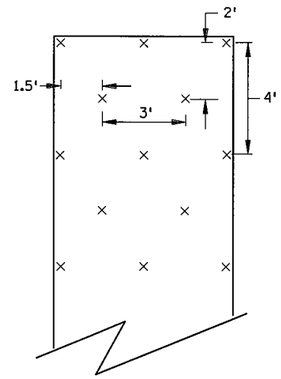

SLOPES 1:2 TO 1:1
(1.7 STAPLES PER SQ YD)

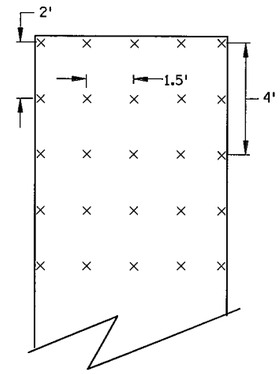

CHANNEL AND DITCH APPLICATIONS
(3.5 STAPLES PER SQ YD)

STANDARD 6 FT BLANKET STAPLE PATTERN

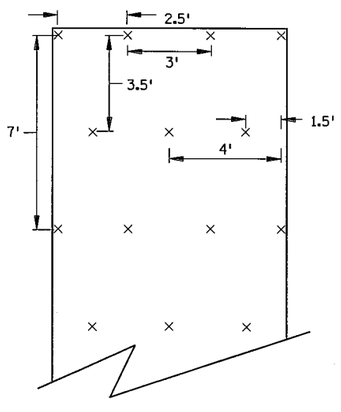

SLOPES FLATTER THAN 1:2
(1.2 STAPLES PER SQ YD)

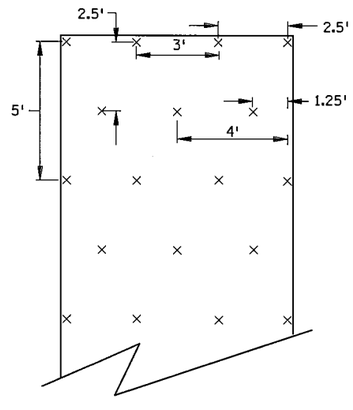

SLOPES 1:2 TO 1:1
(1.7 STAPLES PER SQ YD)

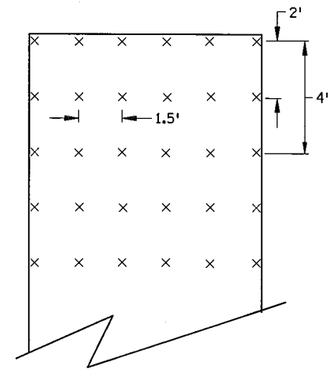

CHANNEL AND DITCH APPLICATIONS
(3.5 STAPLES PER SQ YD)

STANDARD 8 FT BLANKET STAPLE PATTERN

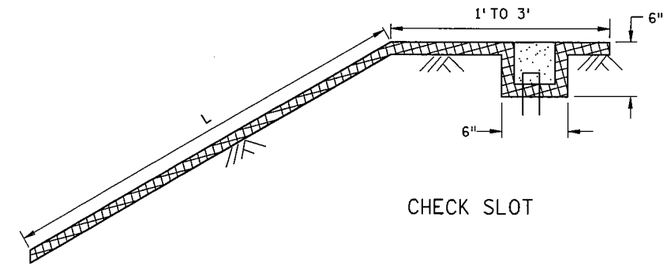

CHECK SLOT

CHECK SLOT REQUIREMENTS

DIG 6 INCH BY 6 INCH TRENCH.

INSERT BLANKET INTO ENTIRE TRENCH PERIMETER.

STAPLE BLANKET EVERY 1 FOOT ALONG THE BOTTOM OF THE TRENCH.

BACKFILL TRENCH WITH SOIL AND COMPACT.

GENERAL BLANKET INSTALLATION REQUIREMENTS

BLANKETS SHALL BE LAID PARALLEL TO THE DIRECTION OF WATER FLOW.

OVERLAP ADJACENT STRIP EDGES A MINIMUM OF 4 INCHES.

OVERLAP BLANKET 7 INCHES (MIN.) AT EACH END. OVERLAP BOTTOM END OF UPPER BLANKET OVER TOP END OF LOWER BLANKET. STAPLE ALONG OVERLAP EVERY 1.5 FEET.

THE UPPERMOST BLANKET OF ALL SLOPE APPLICATIONS MUST START IN A CHECK SLOT. IF SLOPE LENGTH (L) IS 100 FT OR GREATER, INSERT BLANKET INTO A CHECK SLOT 1/3 FROM THE BOTTOM OF THE SLOPE.

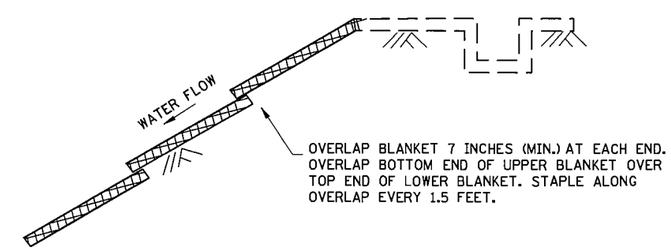

BLANKET OVERLAP

NOTES:

SEE SPEC. 3885

DRAWN BY: MS	CHECKED BY: HS	CERTIFIED BY _____ LICENSED PROFESSIONAL ENGINEER LIC. NO. 18520 DATE 6/18/12	**EROSION CONTROL DETAILS – BLANKET STAPLING PATTERN**
			STATE PROJ. NO. 1901-148 (T.H. 13) SHEET NO. 442 OF 442 SHEETS

CITY OF BURNSVILLE, MINNESOTA
CONSTRUCTION PLANS FOR 12-312 UTILITY IMPROVEMENTS (CO RD 5 / HWY 13)

LEGEND

- EXISTING GATE VALVE
- EXISTING HYDRANT
- EXISTING WATER MANHOLE
- EXISTING CURB BOX
- EXISTING STORM MANHOLE
- EXISTING CATCH BASIN
- EXISTING SANITARY MANHOLE
- EXISTING SEWER CLEANOUT
- EXISTING TELEPHONE MANHOLE
- EXISTING UTILITY POLE
- EXISTING LIGHT POLE
- EXISTING GUY WIRE
- EXISTING JUNCTION BOX
- EXISTING TV BOX
- EXISTING PRIVATE YARD LIGHT
- EXISTING FLAG POLE
- EXISTING HAND HOLE
- EXISTING SEMAPHORE
- EXISTING STREET SIGN
- EXISTING MAILBOX
- SPRINKLER HEAD
- EXISTING WELL
- REFERENCE MONUMENT
- SOIL BORING
- POST INDICATOR VALVE
- IRRIGATION CONTROL VALVE
- EXISTING SANITARY SEWER
- EXISTING STORM SEWER
- EXISTING WATERMAIN
- EXISITNG CURB & GUTTER
- EXISITNG BURIED GAS MAIN
- EXISTING BURIED TELEPHONE
- EXISTING BURIED ELECTRIC
- EXISTING BURIED FIBER
- EXISTING FENCE
- DECIDUOUS TREE
- CONIFEROUS TREE
- TREE LINE
- BUSH
- GARDEN
- PROPOSED GATE VALVE
- PROPOSED HYDRANT
- PROPOSED MANHOLE
- PROPOSED CATCH BASIN
- PROPOSED WATERMAIN
- PROPOSED SANITARY SEWER
- PROPOSED STORM SEWER
- PROPOSED CURB & GUTTER
- ABANDON PIPE
- REMOVE PIPE

7/31/2012 8:56 AM S:\Projects\2012\12-312 5 and 13 Construction\Utilities and Plans\drawings\Title.dwg

GENERAL UTILITIES

1) ALL UTILITY WORK WORK SHALL BE PERFORMED IN ACCORDANCE WITH THE CITY ENGINEERS ASSOCIATION OF MINNESOTA STANDARD SPECIFICATIONS FOR (2600) TRENCH EXCAVATION AND BACKFILL/SURFACE RESTORATION, (2611) WATER MAIN AND SERVICE LINE INSTALLATION, AND (2621) SANITARY SEWER AND STORM SEWER INSTALLATION, 1999 EDITION.

2) COMMON EXCAVATION WILL BE CONSIDERED INCIDENTAL TO THE PIPE CONSTRUCTION IN ALL UTILITY TRENCH AREAS.

3) ALL TRENCHES SHALL BE BACKFILLED BEFORE THE END OF EACH WORKING DAY. SAFETY MEASURES SHALL BE IMPLEMENTED AS NECESSARY, INCLUDING BUT NOT LIMITED TO CONSTRUCTION FENCING, FLASHING MARKERS AND FLAG-PERSONS.

4) CONTRACTOR SHALL MAINTAIN A MINIMUM 18" VERTICAL SEPARATION WHENEVER A MINIMUM 10' HORIZONTAL SEPARATION CAN NOT BE MET BETWEEN THE WATERMAIN AND SANITARY AND/OR STORM SEWERS.

5) ALL ADJUSTING RINGS FOR CATCH BASINS AND MANHOLES SHALL BE REPLACED WITH NEW ADJUSTING RINGS.

6) MORTAR MAY BE USED BETWEEN ADJUSTMENT RINGS AND CASTINGS OF MANHOLES AND CATCH BASINS FOR LEVELING.

7) BULKHEADS SHALL BE INCIDENTAL UNLESS NOTED ON PLANS.

8) THE SUBSURFACE UTILITY INFORMATION IN THIS PLAN IS UTILITY QUALITY LEVEL D. THIS QUALITY LEVEL WAS DETERMINED ACCORDING TO THE GUIDELINES OF CI/ASCE 38-02, ENTITLED "STANDARD GUIDELINES FOR THE COLLECTION AND DEPICTION OF EXISTING SUBSURFACE UTILITY DATA."

SANITARY SEWER

1) CONES AND/OR SLABS THAT DO NOT HAVE A 27 IN. OPENING SHALL BE REMOVED AND REPLACED WITH CONES AND/OR SLABS IN ACCORDANCE WITH DETAILS OR AT THE DIRECTION OF THE ENGINEER. PAYMENT SHALL BE INCIDENTAL TO CATCH BASIN AND/OR MANHOLE RECONSTRUCTION

2) CHIMNEY SEALS AND CHIMNEY SEAL EXTENSIONS SHALL BE INSTALLED ON ALL LOW LYING SANITARY MANHOLES OR AS DIRECTED BY THE ENGINEER.

3) ALL SANITARY SEWER PIPE SHALL BE TYPE SDR 35 PVC UNLESS NOTED ON PLANS.

4) CONTRACTOR SHALL PROVIDE BYPASS SYSTEM FOR EXISTING SEWER FLOWS WHEN COMPLETING WORK ON EXISTING SANITARY SEWER SYSTEMS. ALL WORK RELATED TO THE BYPASS SHALL BE INCIDENTAL TO THE SEWER WORK.

WATERMAIN

1) THE CONTRACTOR SHALL PROVIDE TEMPORARY WATER SERVICE DURING WATERMAIN INSTALLATION AS NEEDED.

2) SALVAGE OF HYDRANTS SHALL BE TO CITY STORAGE AS DIRECTED BY THE ENGINEER.

3) ALL WATERMAIN PIPE SHALL BE CLASS 52 DUCTILE IRON PIPE AND ENCASED WITH POLYETHYLENE, UNLESS OTHERWISE NOTED ON PLANS.

4) EXISTING WATER SERVICES SHALL BE RECONNECTED USING 1" CORPORATION AND 5 LF OF 1" COPPER TYPICAL UNLESS DIRCETED BY THE ENGINEER IN THE FIELD AND WILL BE PAID FOR AT UNIT PRICE BID.

5) ADDITIONAL COMPENSATION FOR WATERMAIN MAY BE CONSIDERED WHEN COVER GREATER THAN 9 FEET IS ENCOUNTERED.

6) ALL WATERMAIN PIPE INSTALLED TO MEET THE MINIMUM CLEARANCE OF CONFLICTING UTILITIES, REGARDLESS OF DEPTH, SHALL BE PAID FOR AT UNIT PRICE BID.

7) WHERE NEW WATERMAIN IS PROPOSED THE EXISTING WATERMAIN SHALL BE REMOVED UNLESS NOTED AND/OR AS DIRECTED BY THE ENGINEER IN THE FIELD AND PAID FOR AT UNIT PRICE BID.

INDEX

STANDARD PLATES REFERENCE U1
GENERAL CONSTRUCTION NOTES U1
TABULATED QUANTITIES..... U2
WATERMAIN LAYOUT PLAN..... U3–U5
PLAN & PROFILE..... U6–U24
PRV DETAIL U25–U26
WATERMAIN DETAILS U27
SANITARY SEWER DETAILS..... U28

CONTRACTOR MUST CONTACT GOPHER STATE ONE CALL
BEFORE CONSTRUCTION BEGINS
651–454–0002
800–252–1166
www.gopherstoteonecall.org

UTILITY COMPANIES	
DAKOTA ELECTRIC ASSOCIATION ATTN: SUE PARISEAU 4300 – 220TH STREET WEST FARMINGTON, MN 55024 (651) 463–6373	XCEL ENERGY ATTN: GREGG WENZEL 5309 WEST 70TH STREET EDINA, MN 55435 (952) 829–4513
FRONTIER COMMUNICATIONS ATTN: DICK MOOERS 14450 BURNHAVEN DRIVE BURNSVILLE, MN 55306 (952) 435–4678	CENTERPOINT ENERGY MINNESOTA GAS ATTN: TRAVIS DENZEL 700 WEST LINDEN AVENUE MINNEAPOLIS, MN 55403–1136 (612) 321–5207
COMCAST ATTN: KEVIN STROP 9705 DATA PARK MINNETONKA, MN 55343 (952) 607–4036	MINNESOTA VALLEY COOPERATIVE POWER & LIGHT ATTN: ROBERT FENNER 125 MINNESOTA VALLEY ELECTRIC DR. JORDAN, MN 55352 (952) 492–8244
CENTURYLINK ATTN: JIM PAULUK 301 W. 65TH STREET RICHFIELD, MN 55423 (612) 861–8781	SPRINT ATTN: DAN HILLIARD 849 EARL STREET ST. PAUL, MN 55106 (651) 772–6714
MAGELLAN PIPELINE COMPANY, LP ATTN: HOWARD WHITE 2451 W. CO. RD. C ROSEVILLE, MN 55113 (612) 759–9452	GREAT RIVER ENERGY ATTN: MICHELLE MACMILLAN 17845 E. HWY 10/ BOX 800 ELK RIVER, MN 55330–0800 (763) 445–5984

City of BURNSVILLE
ENGINEERING DEPARTMENT
100 Civic Center Parkway
Burnsville MN 55337-3817
Phone: 895-4500 ◇ Fax: 895-4404

I hereby certify that this plan, specification or report was prepared by me or under my direct supervision and that I am a duly Registered Professional Engineer under the laws of the State of Minnesota.
DATE 6/29/12 REG. NO. 42844

Date	Revision

Design By	Checked By	Drawn By	Proj. No.
RDP	JAR	DJK	12–312

GENERAL CONSTRUCTION NOTES & STANDARD PLATES
CO RD 5 / HWY 13
CITY PROJ. 12–312

SP
1901–148
019–605–028
179–020–031

Sheet No.
U1 of U28

U2

FEDERAL NON-PARTICIPATING, 100% LOCAL QUANTITIES

Item No.	Description	Units	Contract Qty
2104	REMOVE CASTING	EACH	5
2105	TRENCH MAINTENANCE	LIN FT	1000
2123	EQUIPMENT RENTAL	LUMP SUM	0.15
2503	CHIMNEY SEAL	EACH	1
2503	CHIMNEY SEAL EXTENSION	EACH	1
2504	PRESSURE REDUCING STATION (8" PRV)	LUMP SUM	1
2504	CONNECT TO EXISTING WATERMAIN	EACH	2
2504	6" GATE VALVE & BOX	EACH	2
2504	8" GATE VALVE & BOX	EACH	5
2504	HYDRANT	EACH	2
2504	6" DIP WATERMAIN CL52 (2)	LIN FT	39
2504	8" DIP WATERMAIN CL52 (2)	LIN FT	1884
2504	16" DIP WATERMAIN CL 52 (2)	LIN FT	6
2504	4" INSULATION	SQ YD	148
2504	DUCTILE IRON FITTINGS	POUND	124
2506	CASTING ASSEMBLY SPECIAL (5)	EACH	5
2506	ADJUST FRAME & RING CASTING EXCESS DEPTH (3)	EACH	1
2506	RECONSTRUCT DRAINAGE STRUCTURE (3)	LIN FT	26.8

Notes:

1) Includes Temporary Water Plumbing and Fire Suppression Management
2) With Polyethylene Encasement
3) Sanitary Manhole
4) Watemain (1,825 LF) and Sanitary Sewer (45 LF) Pipe, Pipes to be blown full of sand (incidental)
5) Sanitary Manhole. Consists of 27" Diameter Manhole Casting

U1

FEDERAL PARTICIPATING, (179-020-031) QUANTITIES

Item No.	Description	Units	Contract Qty
2103	DISCONNECT SEWER SERVICE	EACH	7
2103	DISCONNECT WATER SERVICE	EACH	7
2104	REMOVE SEWER PIPE (SANITARY)	LIN FT	948
2104	REMOVE WATERMAIN	LIN FT	3504
2104	REMOVE MANHOLE (3)	EACH	7
2104	REMOVE CASTING (3)	EACH	21
2104	REMOVE GATE VALVE TOP SECTION	EACH	9
2104	REMOVE GATE VALVE & BOX	EACH	25
2104	SALVAGE HYDRANT	EACH	16
2104	ABANDON PIPE (4)	LIN FT	1870
2105	TRENCH MAINTENANCE	LIN FT	3588
2123	EQUIPMENT RENTAL	LUMP SUM	0.85
2503	6" PVC PIPE SEWER	LIN FT	50
2503	8" PVC PIPE SEWER	LIN FT	406
2503	8" DUCTILE IRON PIPE SEWER (2)	LIN FT	130
2503	10" DUCTILE IRON PIPE SEWER (2)	LIN FT	20
2503	12" DUCTILE IRON PIPE SEWER (2)	LIN FT	68
2503	16" DUCTILE IRON PIPE SEWER (2)	LIN FT	831
2503	CONSTRUCT OUTSIDE DROP (3)	EACH	3
2503	CONNECT TO EXISTING SANITARY SEWER	EACH	10
2503	CONNECT TO EXISTING MANHOLES (3)	EACH	5
2503	6" PIPE PLUG	EACH	3
2503	8" PIPE PLUG	EACH	1
2503	8"X6" PVC WYE	EACH	1
2503	CHIMNEY SEAL	EACH	1
2503	CHIMNEY SEAL EXTENSION	EACH	1
2503	CONSTRUCT BULKHEAD	EACH	1
2503	AIR RELIEF MANHOLE	EACH	1
2503	27" STEEL CASING PIPE	LIN FT	80
2503	27" STEEL CASING PIPE (JACKED)	LIN FT	124
2503	DUCTILE IRON FITTINGS	POUND	65
2504	TEMPORARY WATER SERVICE (1)	LUMP SUM	1
2504	PRESSURE REDUCING STATION (16" PRV)	LUMP SUM	1
2504	RECONNECT WATER SERVICE	EACH	2
2504	CONNECT TO EXISTING WATERMAIN	EACH	26
2504	ADJUST GATE VALVE	EACH	13
2504	1.5" CORPORATION STOP	EACH	1
2504	2" CORPORATION STOP	EACH	1
2504	6" GATE VALVE & BOX	EACH	18
2504	8" GATE VALVE & BOX	EACH	3
2504	12" BUTTERFLY VALVE & BOX	EACH	10
2504	16" BUTTERFLY VALVE & BOX	EACH	3
2504	HYDRANT	EACH	12
2504	ADJUST HYDRANT	EACH	1
2504	VALVE OPERATOR EXTENSION	EACH	2
2504	1.5" TYPE K COPPER PIPE	LIN FT	30
2504	2" TYPE K COPPER PIPE	LIN FT	12
2504	6" DIP WATERMAIN CL 52 (2)	LIN FT	433
2504	8" DIP WATERMAIN CL52 (2)	LIN FT	890
2504	12" DIP WATERMAIN CL 52 (2)	LIN FT	2348
2504	16" DIP WATERMAIN CL 52 (2)	LIN FT	2497
2504	DUCTILE IRON FITTINGS	POUND	11272
2506	CASTING ASSEMBLY SPECIAL (5)	EACH	21
2506	ADJUST FRAME & RING CASTING (3)	EACH	2
2506	CONSTRUCT DRAINAGE STRUCTURE DESIGN SPECIAL 13 (3)	EACH	8
2506	CONSTRUCT DRAINAGE STRUCTURE DESIGN SPECIAL 14 (3)	LIN FT	65.8
2506	ADJUST FRAME & RING CASTING EXCESS DEPTH (3)	EACH	7
2506	RECONSTRUCT DRAINAGE STRUCTURE (3)	LIN FT	59.8

City of BURNSVILLE
ENGINEERING DEPARTMENT
100 Civic Center Parkway
Burnsville, MN 55337-3817
Phone: 952-895-4500 • Fax: 895-4404

I hereby certify that this plan, specification or report was prepared by me or under my direct supervision and that I am a duly Registered Professional Engineer under the laws of the State of Minnesota.

DATE 8/29/12 REG. NO. 42844

Date	Revision	Design By RDP	Checked By JAR	Drawn By DDK	Proj. No. 12-312

TABULATED QUANTITIES
Co Rd 5 / Hwy 13
CITY PROJECT 12-312

SP
1901-148
019-605-028
179-020-031

Sheet No.
U2 of U28

7/26/2012 4:34 PM S:\Projects\2012\12-312 5 and 13 Construction\Utilities and Plans\drawings\Title.dwg

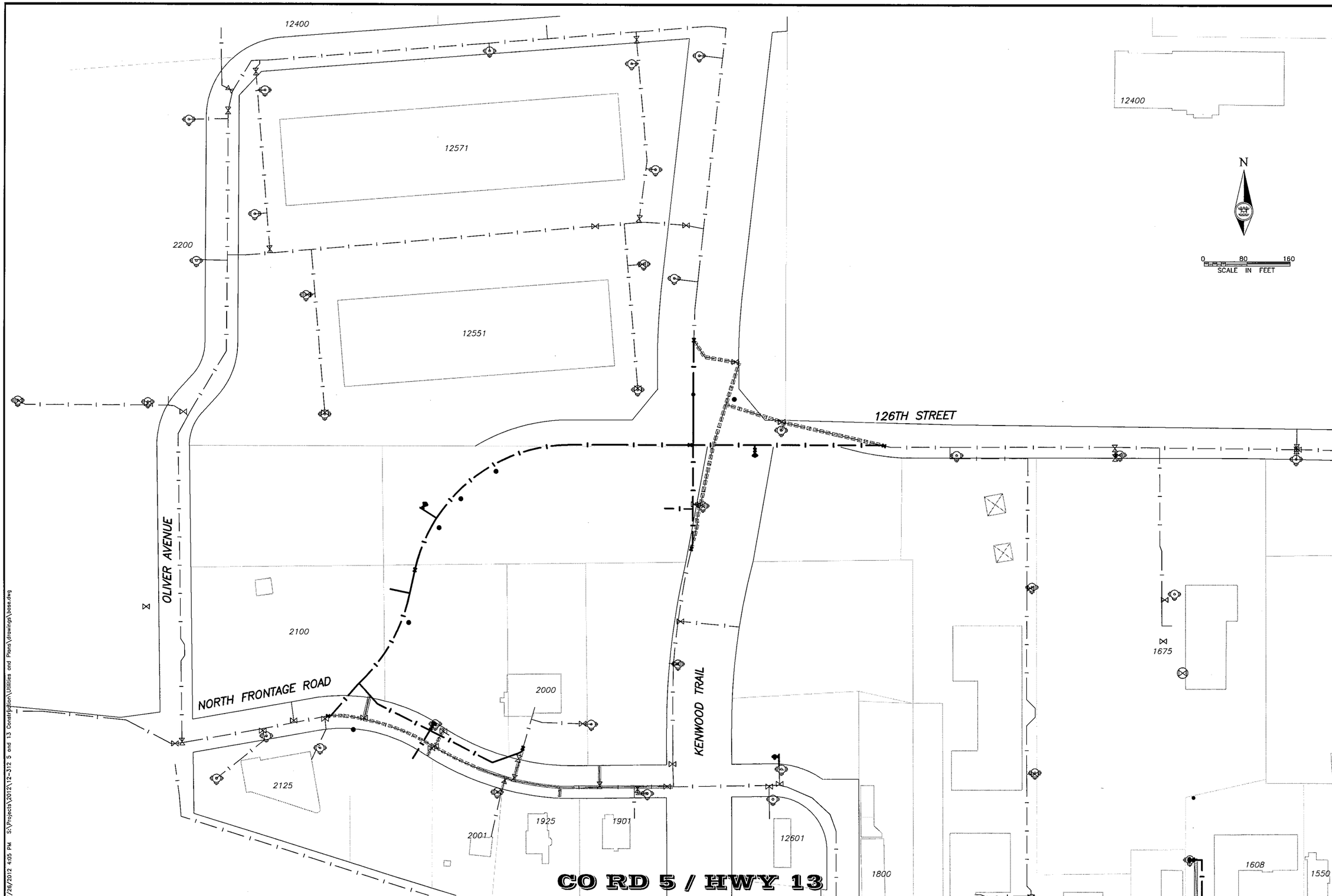

City of BURNSVILLE
ENGINEERING DEPARTMENT
100 Civic Center Parkway
Burnsville, MN 55337-3817
Phone: 895-4530 ◇ Fax: 895-4404

I hereby certify that this plan, specification or report was prepared by me or under my direct supervision and that I am a duly Registered Professional Engineer under the laws of the State of Minnesota.

DATE 6/29/12 REG. NO. 42844

Date	Revision

Design By RDP | Checked By JAR | Drawn By DDK | Proj. No. 12-312

WATERMAIN LAYOUT PLAN
CO RD 5 / HWY 13

SP
1901-148
019-605-028
179-020-031

Sheet No.
U3 of U28

7/26/2012 4:05 PM S:\Projects\2012\12-312 5 and 13 Construction\Utilities and Plans\drawings\base.dwg

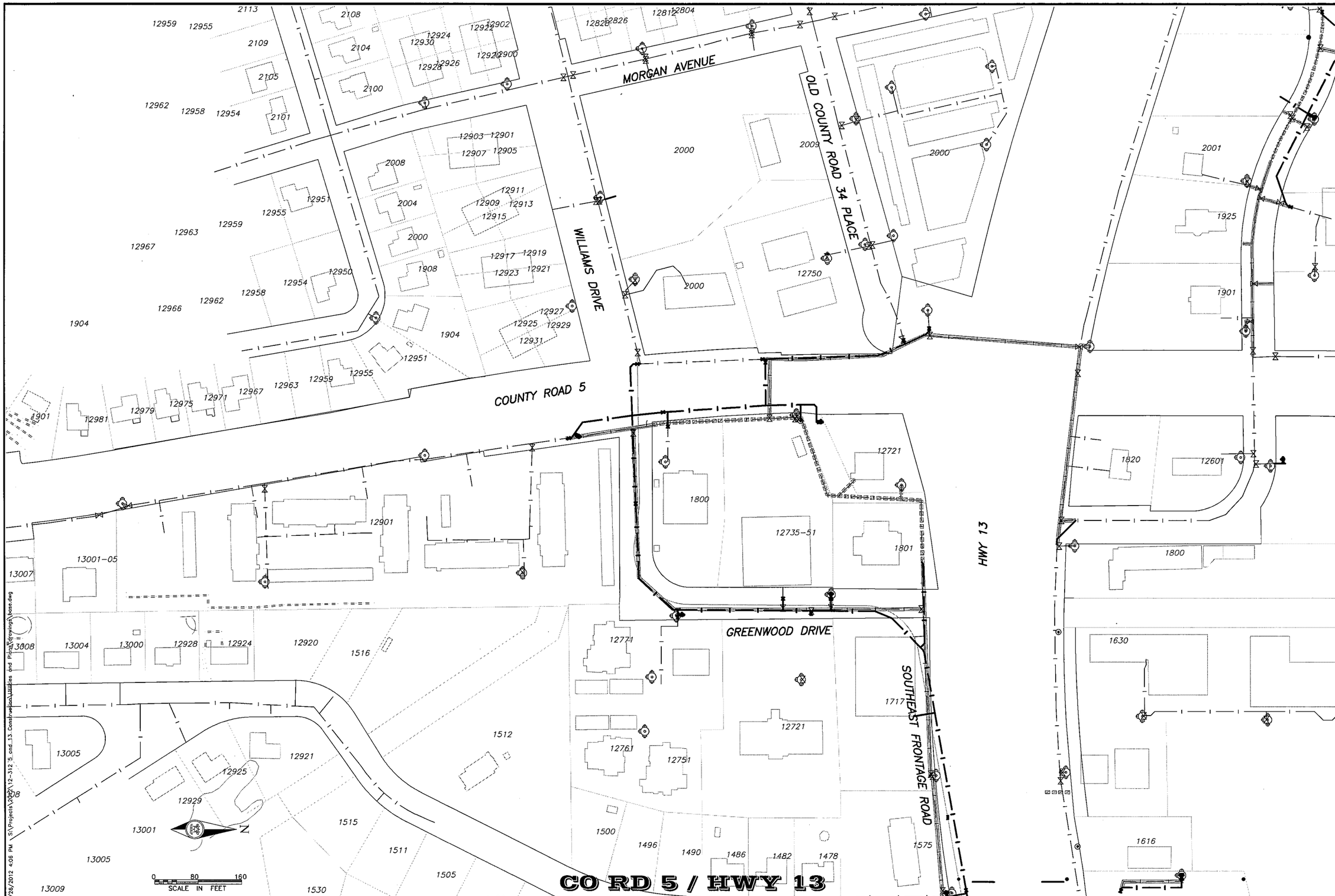

City of BURNSVILLE
ENGINEERING DEPARTMENT
100 Civic Center Parkway
Burnsville, MN 55337-3817
Phone: 895-4530 ◇ Fax: 895-4404

I hereby certify that this plan, specification or report was prepared by me or under my direct supervision and that I am a duly Registered Professional Engineer under the laws of the State of Minnesota.

DATE 6/29/12 REG. NO. 42844

Design By	Checked By	Drawn By	Proj. No.
RDP	JAR	DDK	12-312

Revision

Date

WATERMAIN LAYOUT PLAN
CO RD 5 / HWY 13

SP 1901-148
019-605-028
179-020-031

Sheet No.
U4 of U28

7/26/2012 4:06 PM S:\Projects\2012\12-312 5 and 13 Construction\Utilities and Plans\Drawings\base.dwg

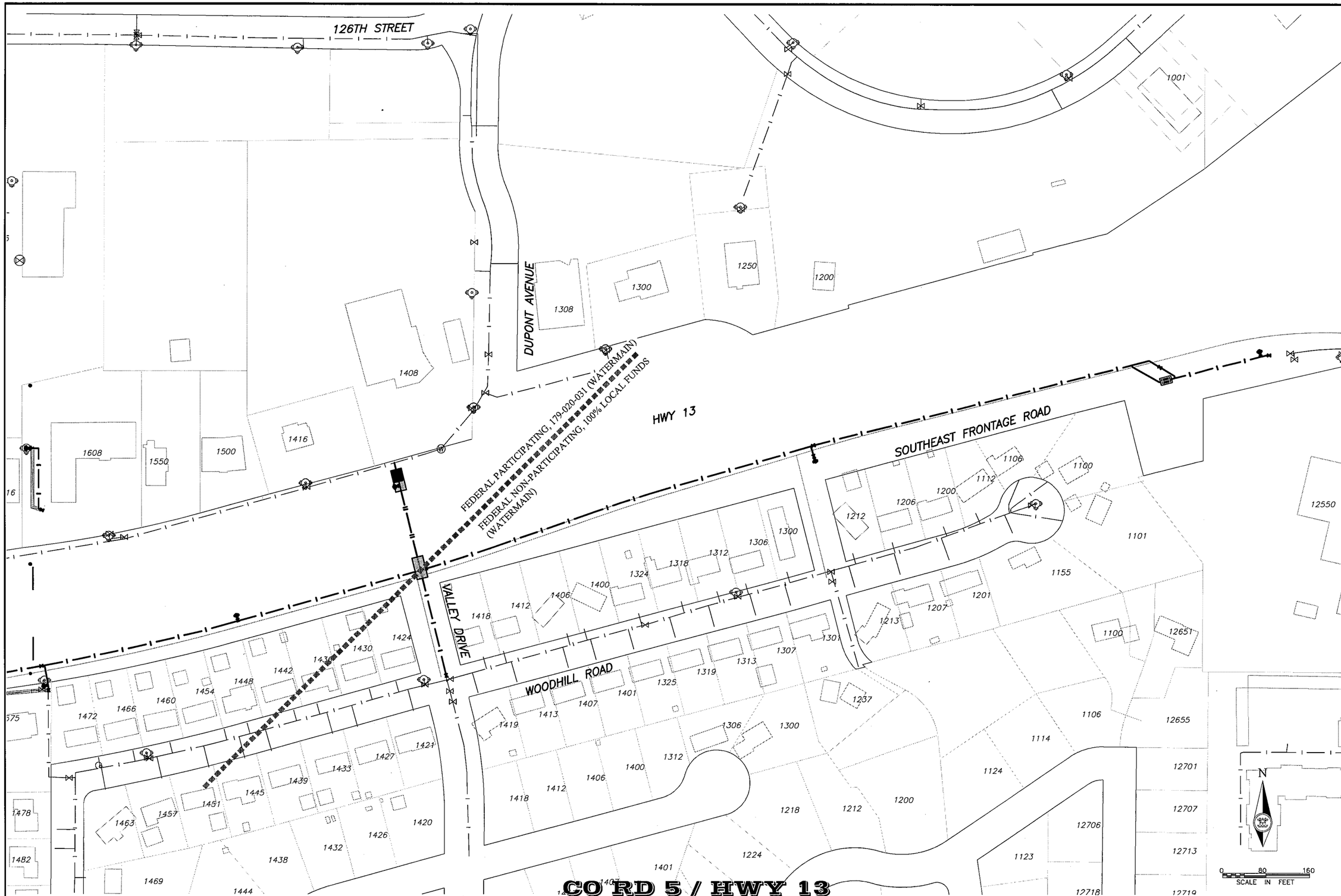

City of BURNSVILLE
ENGINEERING DEPARTMENT
1000 Civic Center Parkway
Burnsville, MN 55337-3817
Phone: 895-4526 • Fax: 895-4404

I hereby certify that this plan, specification or report was prepared by me or under my direct supervision and that I am a duly Registered Professional Engineer under the laws of the State of Minnesota.

DATE 6/29/12 REG. NO. 42844

Date	Revision

Design By RDP | Checked By JAR | Drawn By DDK | Proj. No. 12-312

WATERMAIN LAYOUT PLAN
CO RD 5 / HWY 13

SP
1901-148
019-605-028
179-020-031

Sheet No.
U5 of U28

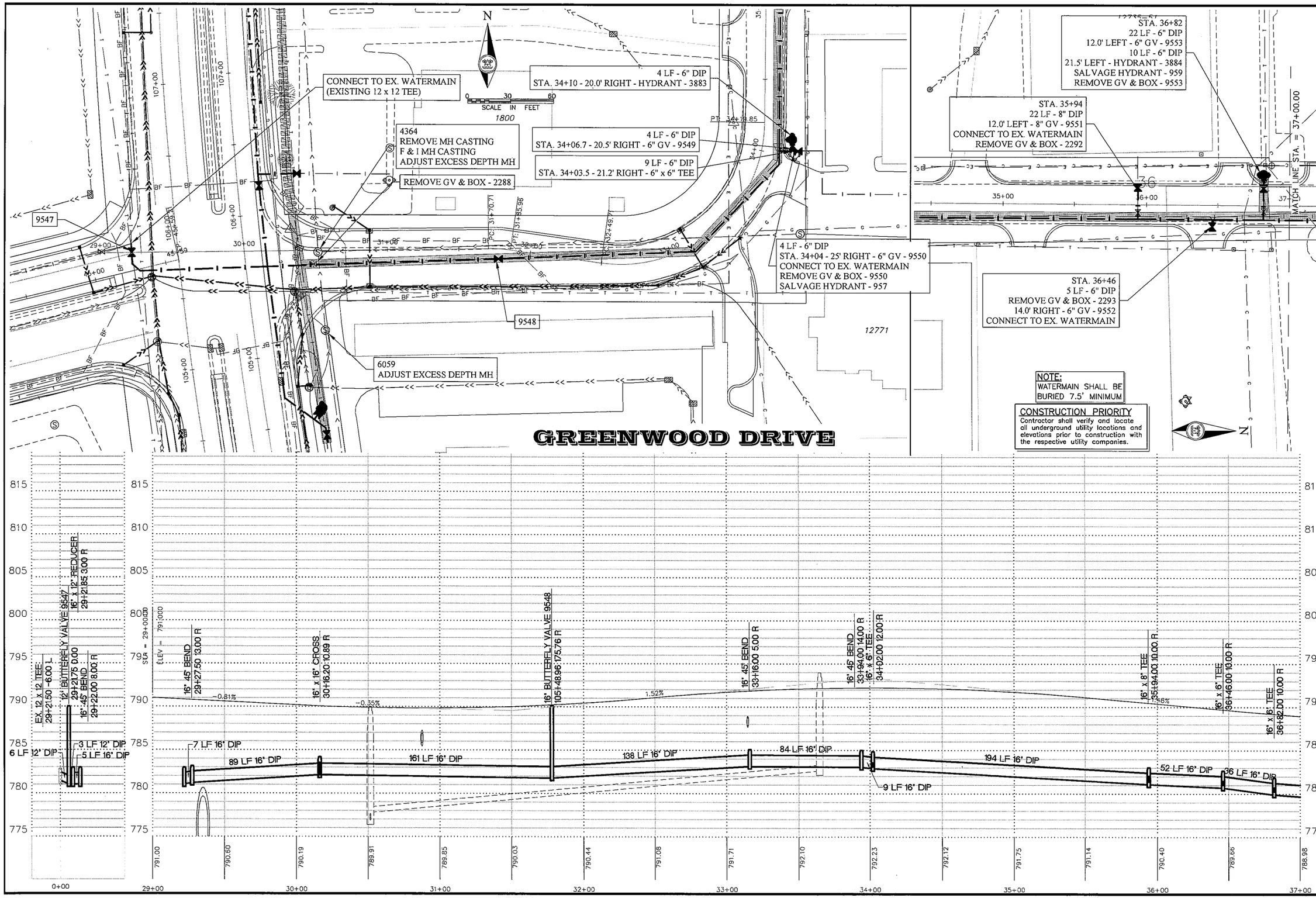

City of BURNSVILLE
ENGINEERING DEPARTMENT
100 Civic Center Parkway
Burnsville MN 55337-3817
Phone: 952-895-4500 ◇ Fax: 952-895-4404

I hereby certify that this plan, specification or report was prepared by me or under my direct supervision and that I am a duly Registered Professional Engineer under the laws of the State of Minnesota.

DATE 6/29/12 REG. NO. 42844

Date	Revision

Design By: RDP
Checked By: JAR
Drawn By: DDK
Proj. No.: 12-312

UTILITY PLAN & PROFILE
GREENWOOD DRIVE
from Sta. 29+00 to Sta. 37+00

SP 1901-148
019-605-028
179-020-031

Sheet No.
U6 of U28

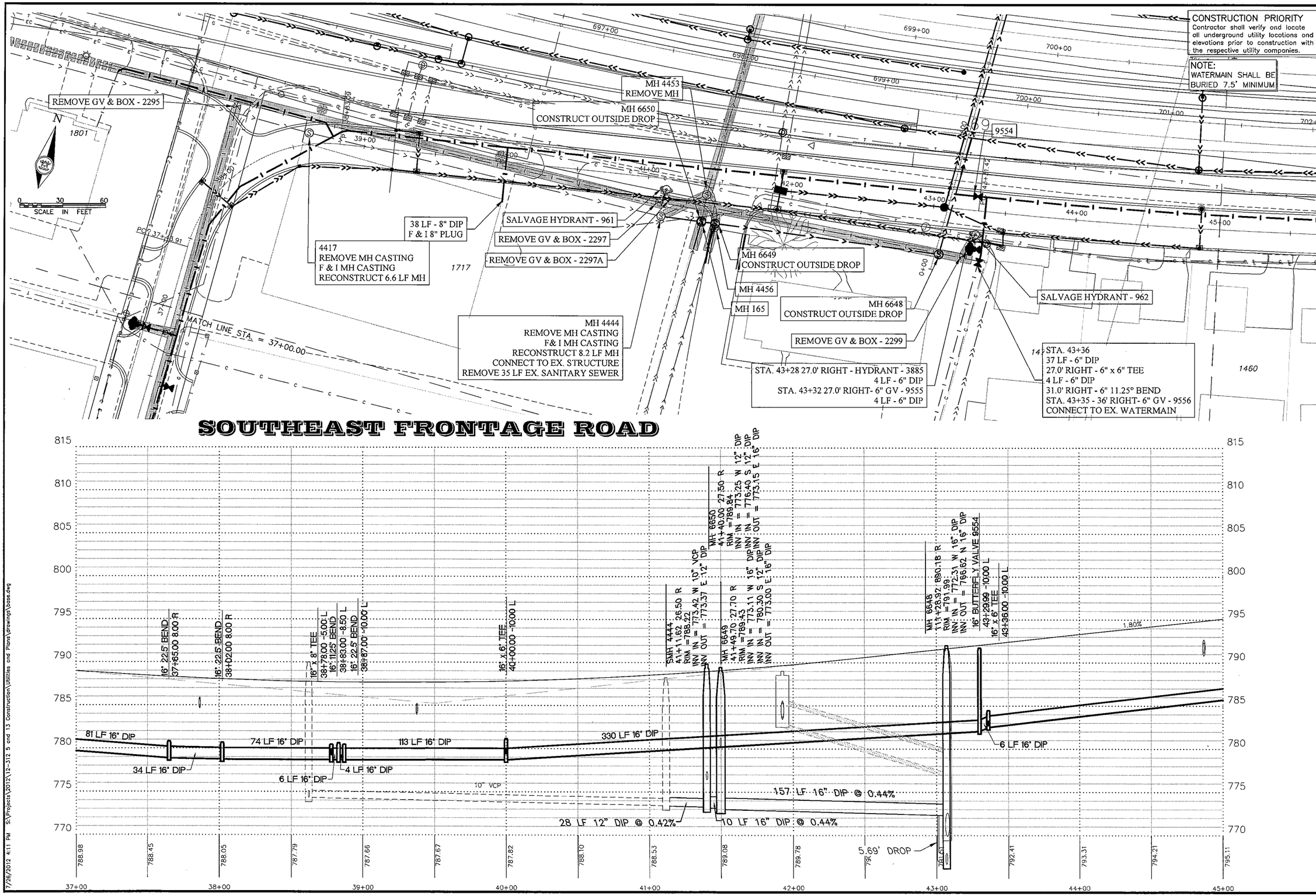

City of BURNSVILLE
ENGINEERING DEPARTMENT
100 Civic Center Parkway
Burnsville, MN 55337-3817
Phone: 895-4530 ~ Fax: 895-4404

I hereby certify that this plan, specification or report was prepared by me or under my direct supervision and that I am a duly Registered Professional Engineer under the laws of the State of Minnesota.

DATE 6/29/12 REG. NO. 42844

Date	Revision

Design By	Checked By	Drawn By	Proj. No.
RDP	JAR	DDK	12-312

UTILITY PLAN & PROFILE
SOUTHEAST FRONTAGE ROAD
from Sta. 37+00 to Sta. 45+00

SP
1901-148
019-605-028
179-020-031

Sheet No.
U7 of U28

7/26/2012 4:11 PM S:\Projects\2012\12-312 5 and 13 Construction\Utilities and Plans\drawings\base.dwg

CONSTRUCTION PRIORITY
Contractor shall verify and locate all underground utility locations and elevations prior to construction with the respective utility companies.

NOTE:
WATERMAIN SHALL BE BURIED 7.5' MINIMUM

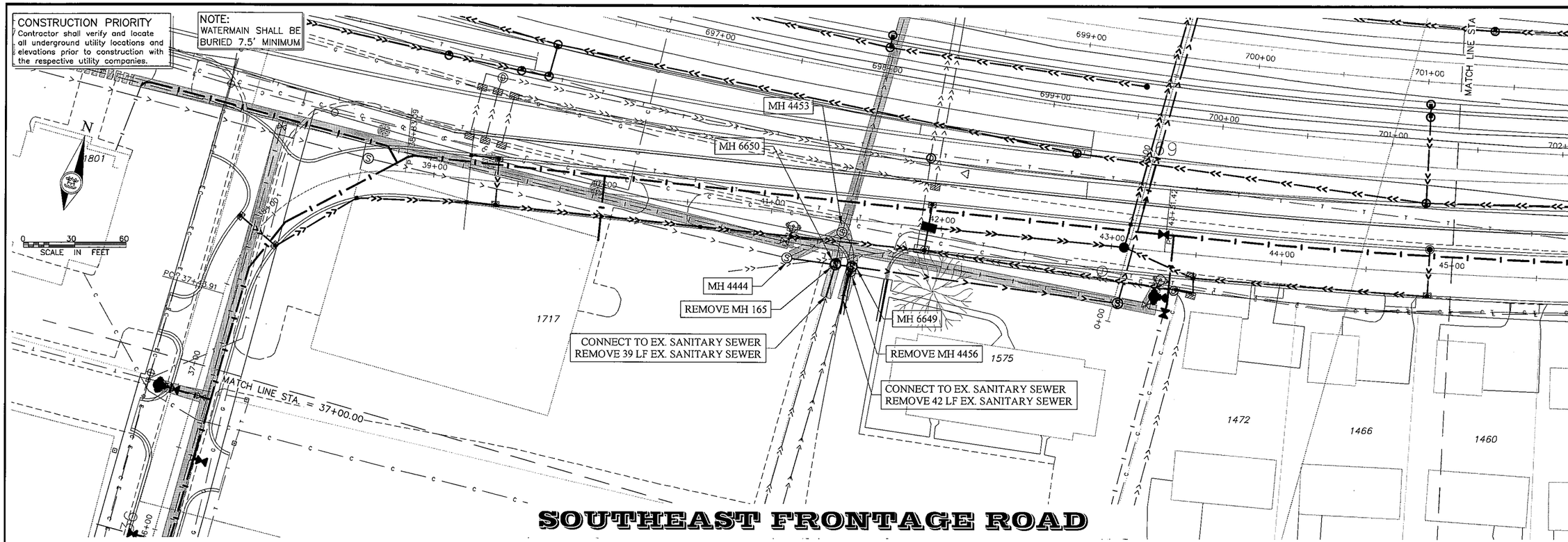

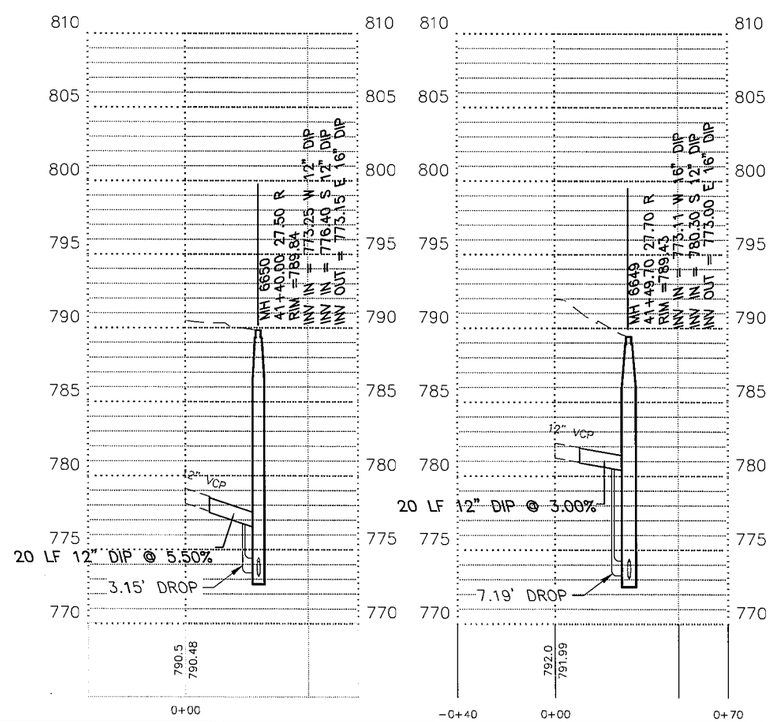

City of BURNSVILLE
ENGINEERING DEPARTMENT
100 Civic Center Parkway
Burnsville, MN 55337
Phone: 895-4500 <> Fax: 895-4404

I hereby certify that this plan, specification or report was prepared by me or under my direct supervision and that I am a duly Registered Professional Engineer under the laws of State of Minnesota.

DATE 6/29/12 REG. NO. 42844

Date	Revision

Design By	Checked By	Drawn By	Proj. No.
RDP	JAR	DDK	12-312

UTILITY PLAN & PROFILE
SOUTHEAST FRONTAGE ROAD
from Sta. 37+00 to Sta. 45+00

SP
1901-148
019-605-028
179-020-031
Sheet No.
U8 of U28

7/26/2012 4:12 PM S:\Projects\2012\12-312 5 and 13 Construction\Utilities and Plans\drawings\base.dwg

CONSTRUCTION PRIORITY
Contractor shall verify and locate all underground utility locations and elevations prior to construction with the respective utility companies.

NOTE:
WATERMAIN SHALL BE BURIED 7.5' MINIMUM

STA. 47+00
2 LF - 6" DIP
11.5' LEFT- 6" GV - 9557
9 LF - 6" DIP
20.5' LEFT - HYDRANT - 3886

FEDERAL PARTICIPATING, 179-020-031 (WATERMAIN)
FEDERAL NON-PARTICIPATING, 100% LOCAL FUNDS
(WATERMAIN)

9558

4626
REMOVE MH CASTING
F & I MH CASTING
RECONSTRUCT 7.8 LF MH

MATCH LINE STA. = 45+00.00

MATCH LINE STA. = 53+00.00

VALLEY DRIVE

SCALE IN FEET 0 30 60

SOUTHEAST FRONTAGE ROAD

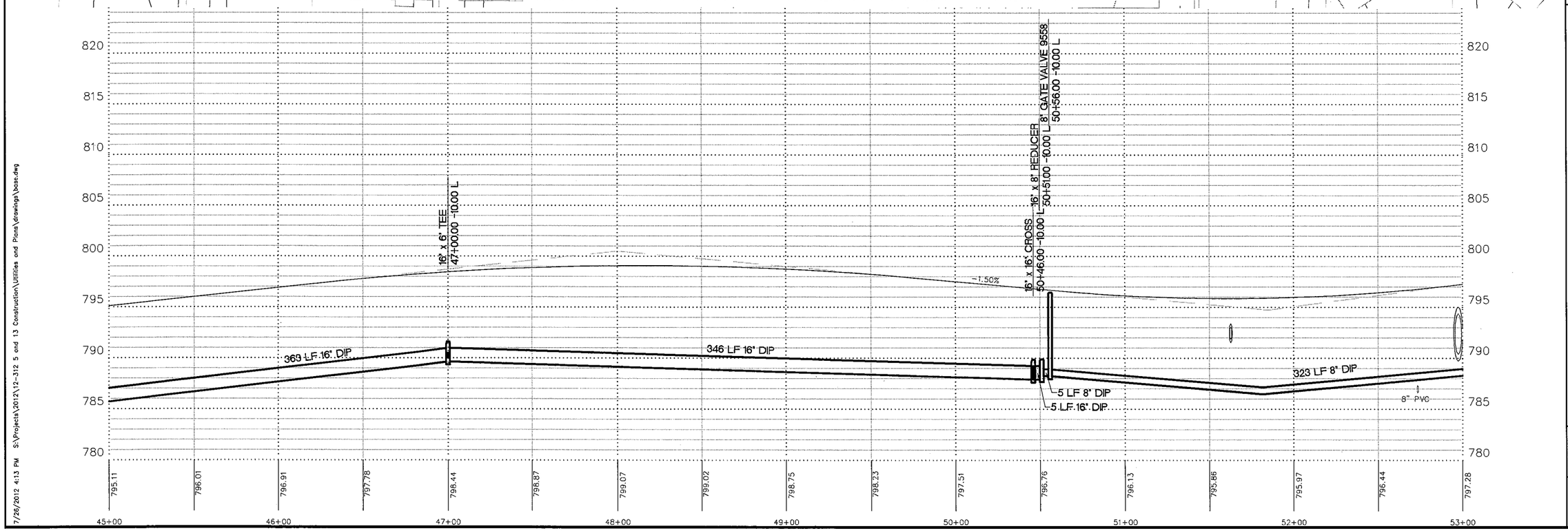

City of BURNSVILLE
ENGINEERING DEPARTMENT
100 Civic Center Parkway
Burnsville, MN 55337-3817
Phone: 895-4530 ◇ Fax: 895-4404

I hereby certify that this plan, specification or report was prepared by me or under my direct supervision and that I am a duly Registered Professional Engineer under the laws of Minnesota.

DATE 6/29/12 REG. NO. 42844

Date	Revision	Design By	Checked By	Drawn By	Proj. No.
		RDP	JAR	DDK	12-312

UTILITY PLAN & PROFILE
SOUTHEAST FRONTAGE ROAD
from Sta. 45+00 to Sta. 53+00

SP
1901-148
019-605-028
179-020-031

Sheet No.
U9 of U28

7/26/2012 4:13 PM S:\Projects\2012\12-312 5 and 13 Construction\Utilities and Plans\drawings\base.dwg

CONSTRUCTION PRIORITY
Contractor shall verify and locate all underground utility locations and elevations prior to construction with the respective utility companies.

NOTE:
WATERMAIN SHALL BE BURIED 7.5' MINIMUM

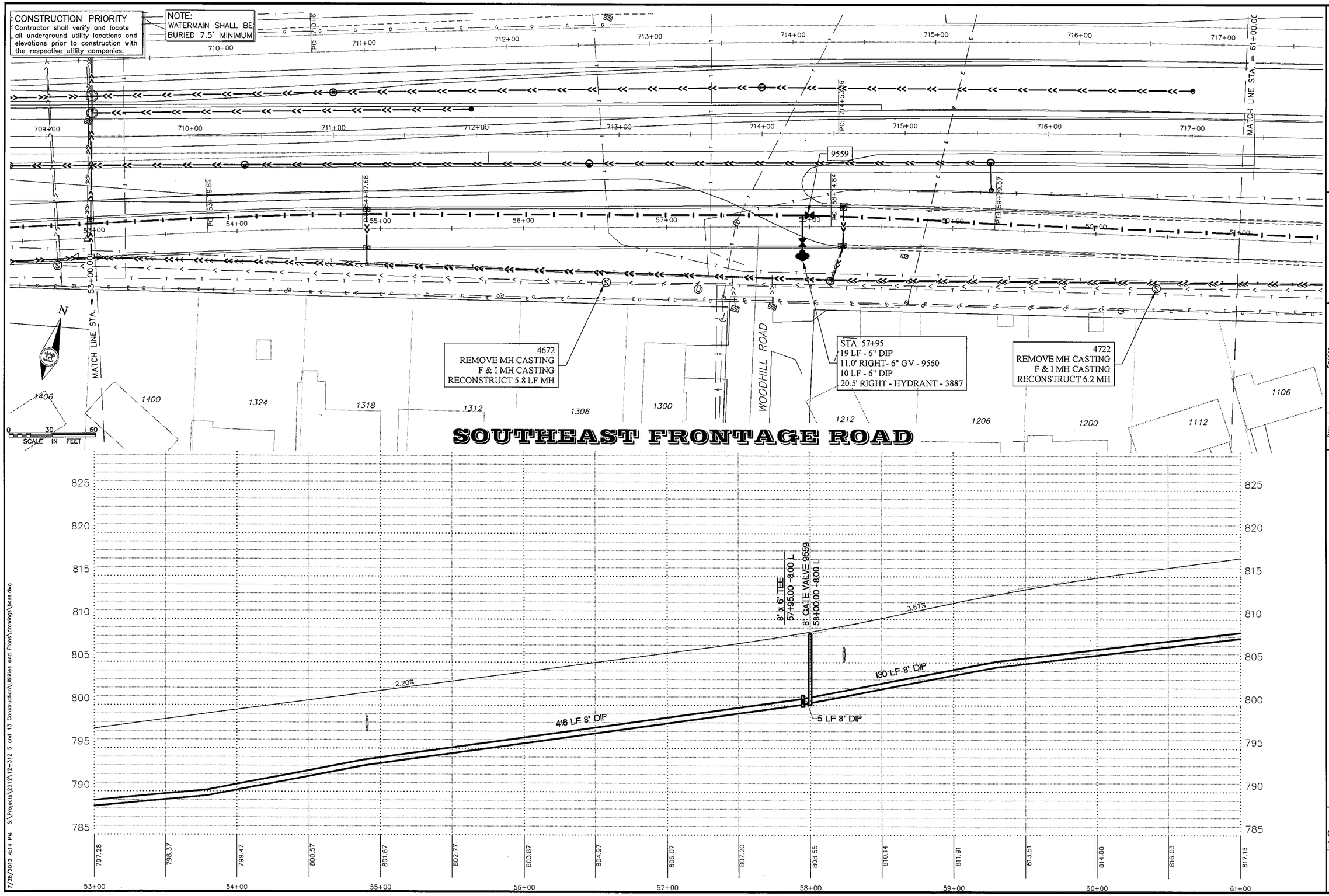

City of BURNSVILLE
ENGINEERING DEPARTMENT
100 Civic Center Parkway
Burnsville, MN 55337-3817
Phone: 895-4530 • Fax: 895-4104

I hereby certify that this plan, specification or report was prepared by me or under my direct supervision and that I am a duly Registered Professional Engineer under the laws of the State of Minnesota.

DATE 6/29/12 REG. NO. 42844

Date	Revision

Design By RDP | Checked By JAR | Drawn By DDK | Proj. No. 12-312

UTILITY PLAN & PROFILE
SOUTHEAST FRONTAGE ROAD
from Sta. 53+00 to Sta. 61+00

SP 1901-148
019-605-028
179-020-031

Sheet No.
U10 of U28

7/29/2012 4:14 PM S:\Projects\2012\12-312 5 and 13 Construction\Utilities and Plans\drawings\base.dwg

CONSTRUCTION PRIORITY
Contractor shall verify and locate all underground utility locations and elevations prior to construction with the respective utility companies.

NOTE:
WATERMAIN SHALL BE BURIED 7.5' MINIMUM

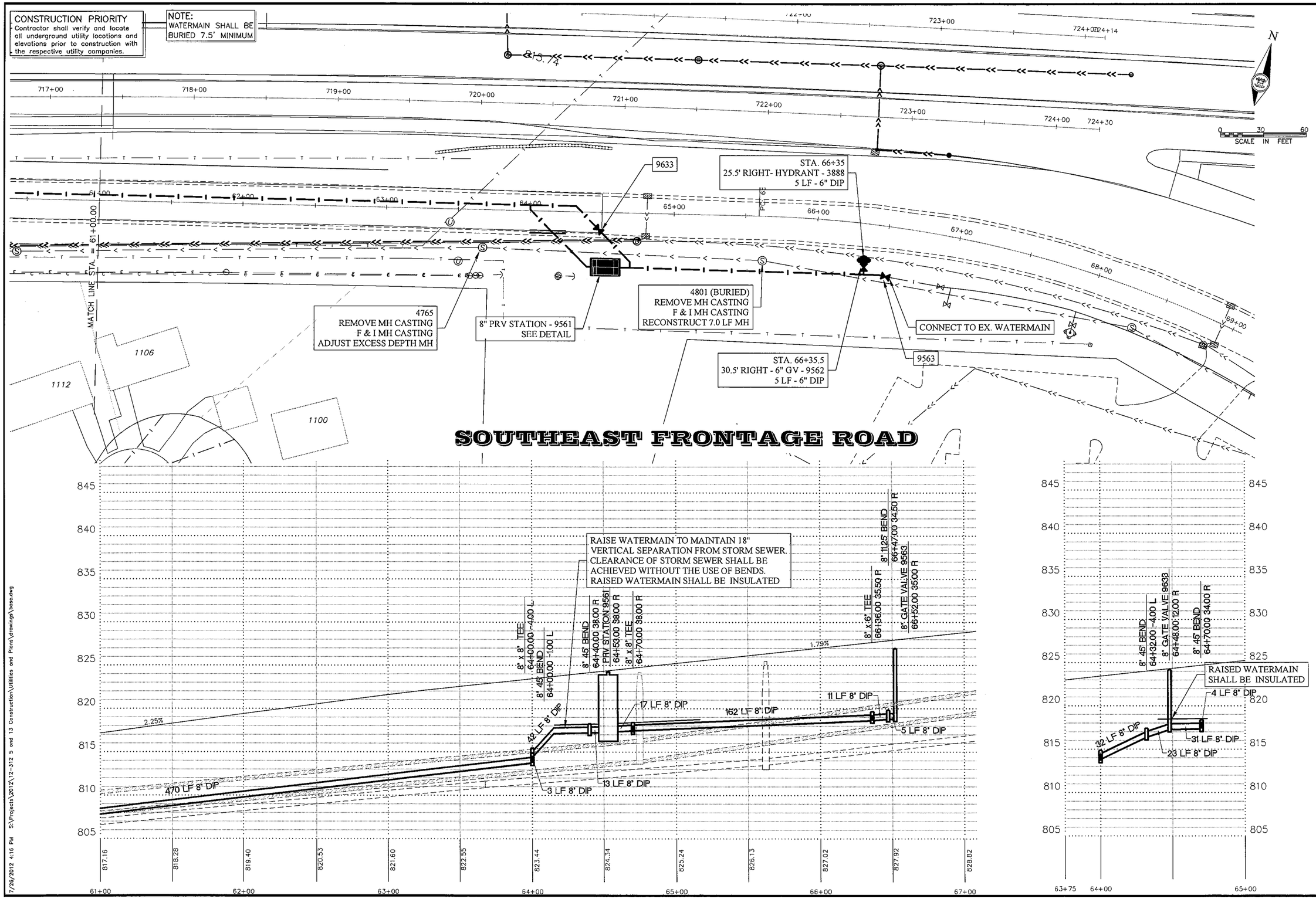

City of BURNSVILLE
ENGINEERING DEPARTMENT
100 Civic Center Parkway
Burnsville, MN 55337-3817
Phone: 895-4500 • Fax: 895-4104

I hereby certify that this plan, specification or report was prepared by me or under my direct supervision and that I am a duly Registered Professional Engineer under the laws of the State of Minnesota.

DATE 6/29/12 REG. NO. 42844

Date	Revision

Design By	Checked By	Drawn By	Proj. No.
RDP	JAR	DDK	12-312

UTILITY PLAN & PROFILE
SOUTHEAST FRONTAGE ROAD
from Sta. 61+00 to Sta. 69+00

SP 1901-148
019-605-028
179-020-031

Sheet No.
U11 of U28

7/26/2012 4:16 PM S:\Projects\2012\12-312 5 and 13 Construction\Utilities and Plans\drawings\base.dwg

CONSTRUCTION PRIORITY
Contractor shall verify and locate all underground utility locations and elevations prior to construction with the respective utility companies.

NOTE:
WATERMAIN SHALL BE BURIED 7.5' MINIMUM

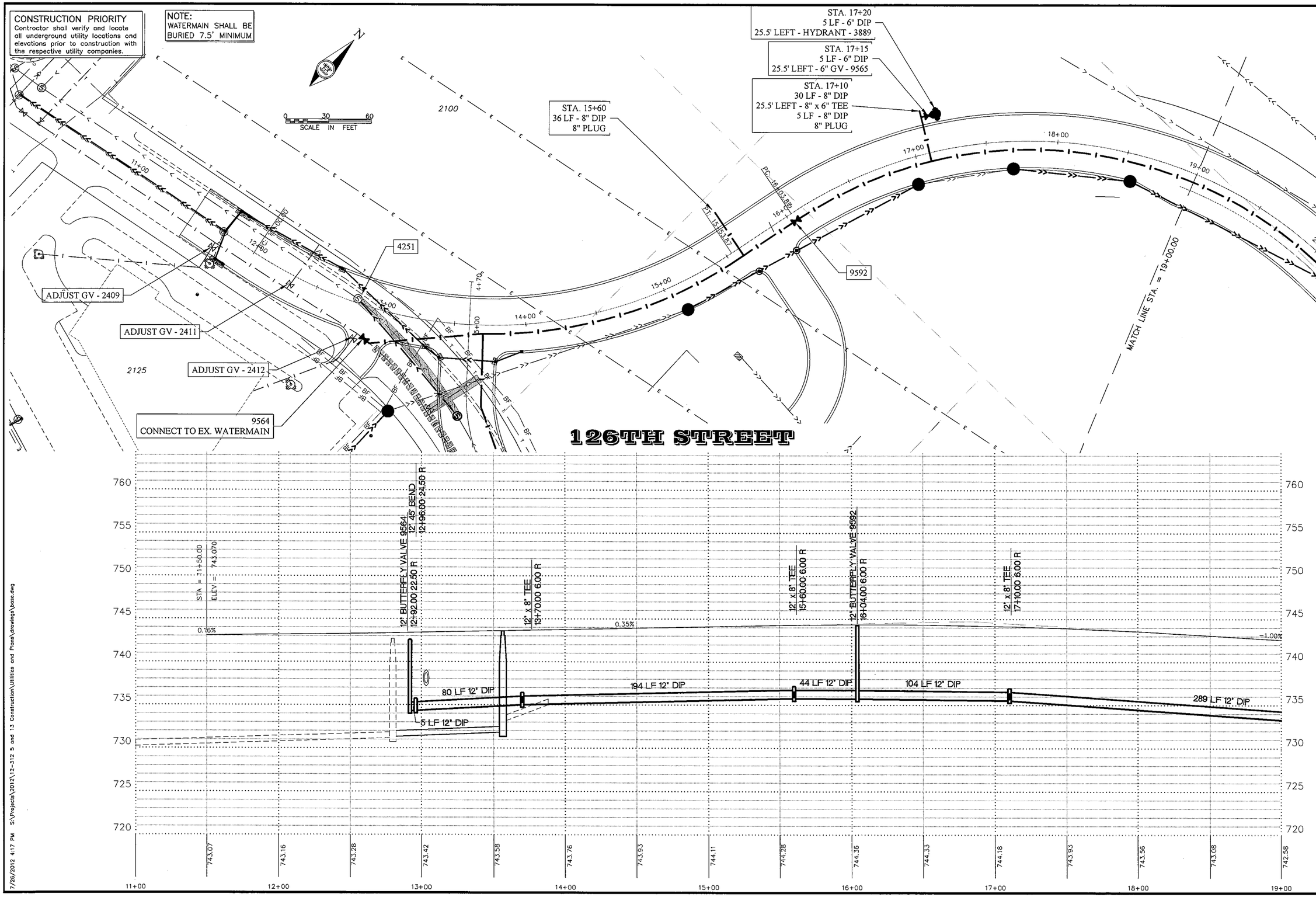

City of BURNSVILLE
ENGINEERING DEPARTMENT
100 Civic Center Parkway
Burnsville, MN 55337
Phone: 952-895-4530 • Fax: 952-895-4404

I hereby certify that this plan, specification or report was prepared by me or under my direct supervision and that I am a duly Registered Professional Engineer under the laws of the State of Minnesota.

DATE 6/29/12 REG. NO. 42844

Date	Revision

Design By RDP | Checked By JAR | Drawn By DDK | Proj. No. 12-312

UTILITY PLAN & PROFILE
126TH STREET
from Sta. 11+00 to Sta. 19+00

SP 1901-148
019-605-028
179-020-031

Sheet No.
U12 of U28

7/26/2012 4:17 PM S:\Projects\2012\12-312 5 and 13 Construction\Utilities and Plans\drawings\base.dwg

CONSTRUCTION PRIORITY
Contractor shall verify and locate all underground utility locations and elevations prior to construction with the respective utility companies.

NOTE:
WATERMAIN SHALL BE BURIED 7.5' MINIMUM

N

0 30 60
SCALE IN FEET

REMOVE GV TOP SECTION - 2404

ABANDON WATERMAIN TO BE BLOWN FULL OF SAND
290 LF 12" , 15 LF 6"

SALVAGE HYDRANT - 872

PT: 20+10.21

PT: 123+19.88

9566

STA. 23+50
10 LF - 6" DIP
16.0' RIGHT- 6" GV - 9567
9 LF - 6" DIP
25.0' RIGHT- HYDRANT - 3890

9568
CONNECT TO EX. WATERMAIN

KENWOOD TRAIL

MATCH LINE STA. = 19+00.00

126TH STREET

12" 45° BEND 20+05.00 6.00 R
12" 45° BEND 20+10.00 6.00 R
12" 45° BEND 20+70.00 6.00 R
12" 45° BEND 20+75.00 6.00 R
STA = 22+00.29
ELEV = 742.290
12" BUTTERFLY VALVE 9566 22+30.00 6.00 R
12" x 12" CROSS 22+35.90 6.00 R
12" x 6" TEE 23+50.00 6.00 R
12" 22.5° BEND 25+84.00 6.03 R
12" BUTTERFLY VAVLE 9568 25+88.00 7.00 R

0.82% 0.00% 0.00% -2.00% 0.50%

155 LF 12" DIP
114 LF 12" DIP
234 LF 12" DIP
5 LF 12" DIP
60 LF 12" DIP
5 LF 12" DIP
6 LF 12" DIP
8" PVC
4 LF 12" DIP

760 755 750 745 740 735 730 725 720

742.58 742.08 741.69 741.53 741.59 741.88 742.29 742.29 741.78 741.53 741.28 741.06 740.93 740.92 741.01 741.22 741.53

19+00 20+00 21+00 22+00 23+00 24+00 25+00 26+00 27+00

7/26/2012 4:18 PM S:\Projects\2012\12-312 5 and 13 Construction\Utilities and Plans\drawings\base.dwg

City of BURNSVILLE
ENGINEERING DEPARTMENT
100 Civic Center Parkway
Burnsville, MN 55337
Phone: 895-4530 <> Fax: 895-4104

I hereby certify that this plan, specification or report was prepared by me or under my direct supervision and that I am a duly Registered Professional Engineer under the laws of the State of Minnesota.
DATE 6/29/12 REG. NO. 42844

Date	Revision	Design By	Checked By	Drawn By	Proj. No.
		RDP	JAR	DDK	12-312

UTILITY PLAN & PROFILE
126TH STREET
from Sta. 19+00 to Sta. 27+00

SP
1901-148
019-605-028
179-020-031

Sheet No.
U13 of U28

CONSTRUCTION PRIORITY
Contractor shall verify and locate all underground utility locations and elevations prior to construction with the respective utility companies.

NOTE:
WATERMAIN SHALL BE BURIED 7.5' MINIMUM

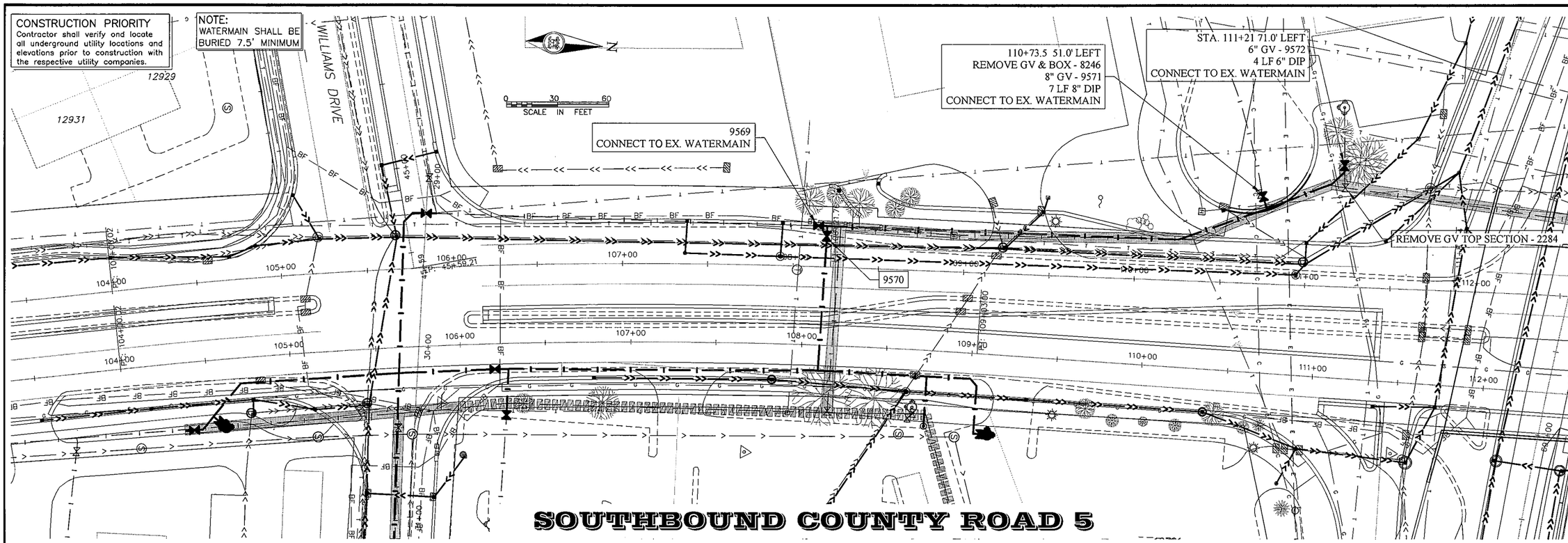

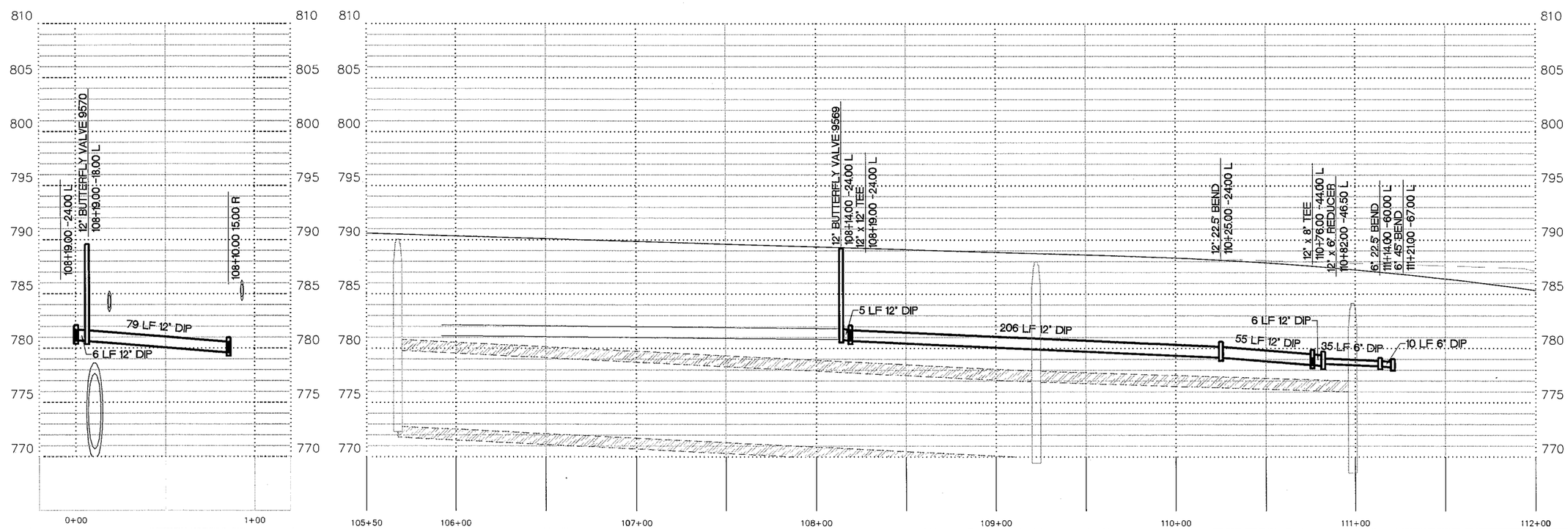

City of BURNSVILLE
ENGINEERING DEPARTMENT
100 Civic Center Parkway
Burnsville MN 55337-3817
Phone: 895-4530 ~ Fax: 895-4404

I hereby certify that this plan, specification or report was prepared by me or under my direct supervision and that I am a duly Registered Professional Engineer under the laws of the State of Minnesota.

DATE 6/29/12 REG. NO. 42844

Date	Revision	Design By	Checked By	Drawn By	Proj. No.
		RDP	JAR	DDK	12-312

UTILITY PLAN & PROFILE
SOUTHBOUND COUNTY ROAD 5
from Sta. 105+50 to Sta. 112+00

SP
1901-148
019-605-028
179-020-031

Sheet No.
U14 of U28

7/26/2012 4:19 PM S:\Projects\2012\12-312 5 and 13 Construction\Utilities and Plans\drawings\base.dwg

CONSTRUCTION PRIORITY
Contractor shall verify and locate all underground utility locations and elevations prior to construction with the respective utility companies.

NOTE:
WATERMAIN SHALL BE BURIED 7.5' MINIMUM

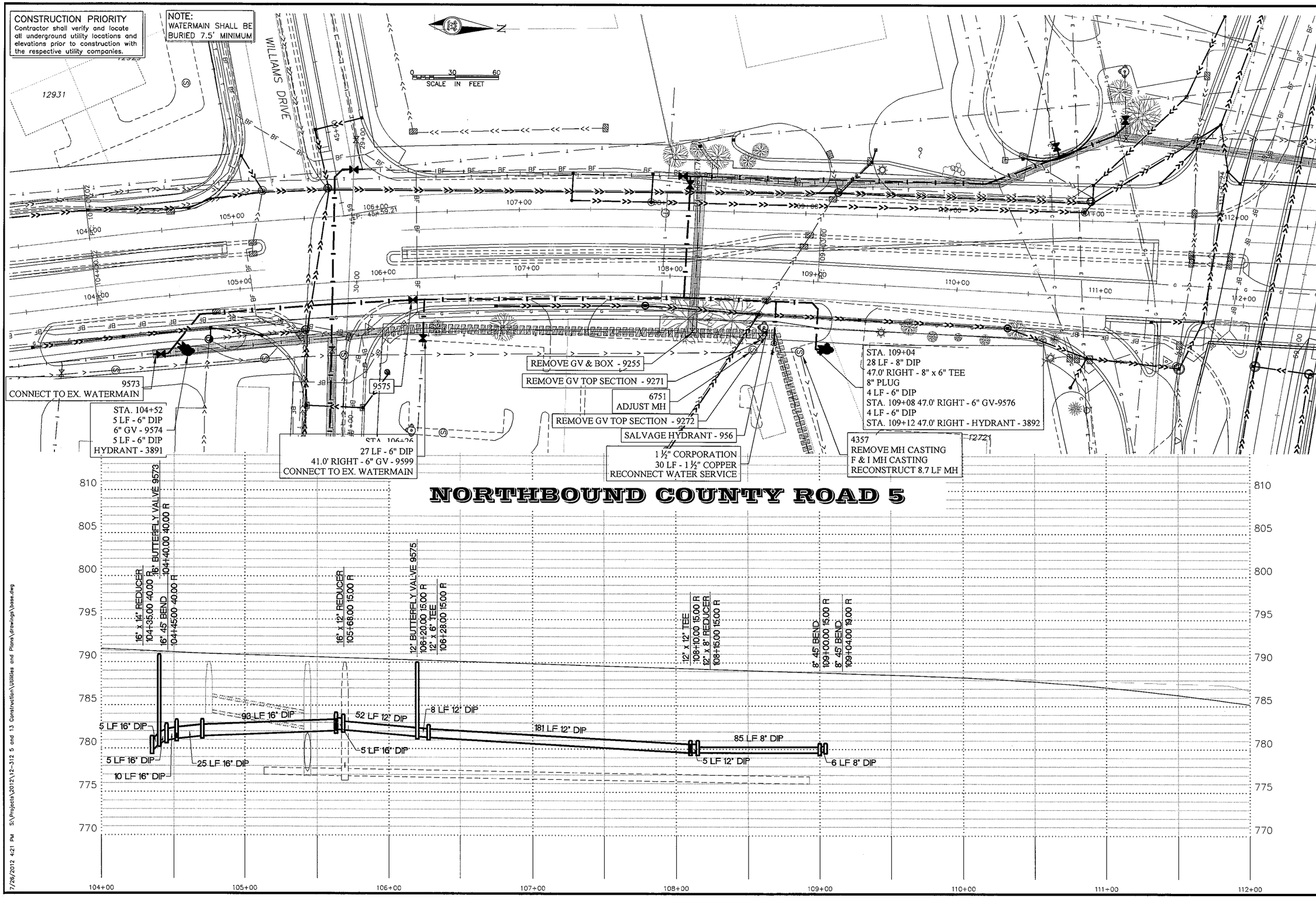

City of BURNSVILLE
ENGINEERING DEPARTMENT
100 Civic Center Parkway
Burnsville, MN 55337
Phone: 895-4530 ◇ Fax: 895-4404

I hereby certify that this plan, specification or report was prepared by me or under my direct supervision and that I am a duly Registered Professional Engineer under the laws of the State of Minnesota.

DATE 6/29/12 REG. NO. 42844

Date	Revision

Design By	Checked By	Drawn By	Proj. No.
RDP	JAR	DDK	12-312

UTILITY PLAN & PROFILE
NORTH BOUND COUNTY ROAD 5
from Sta. 104+00 to Sta. 112+00

SP
1901-148
019-605-028
179-020-031

Sheet No.
U15 of U28

7/26/2012 4:21 PM S:\Projects\2012\12-312 5 and 13 Construction\Utilities and Plans\drawings\base.dwg

CONSTRUCTION PRIORITY
Contractor shall verify and locate all underground utility locations and elevations prior to construction with the respective utility companies.

NOTE:
WATERMAIN SHALL BE BURIED 7.5' MINIMUM

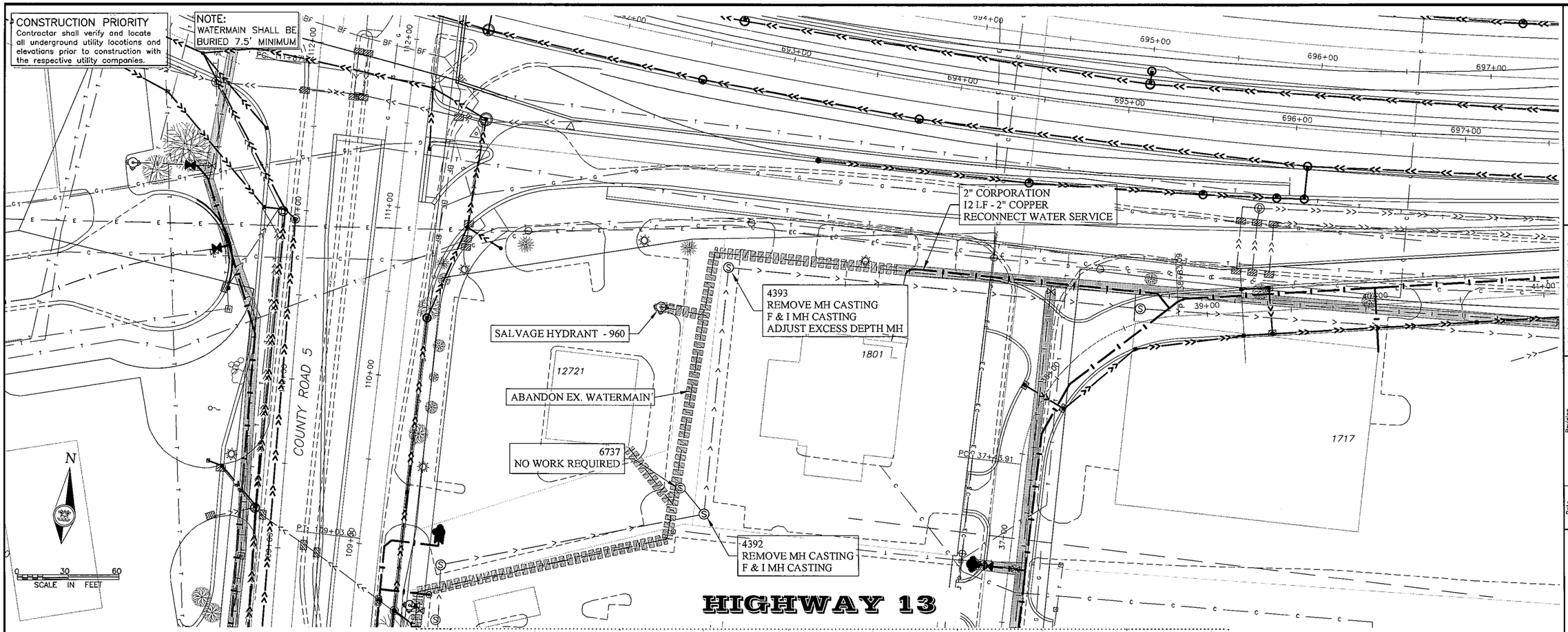

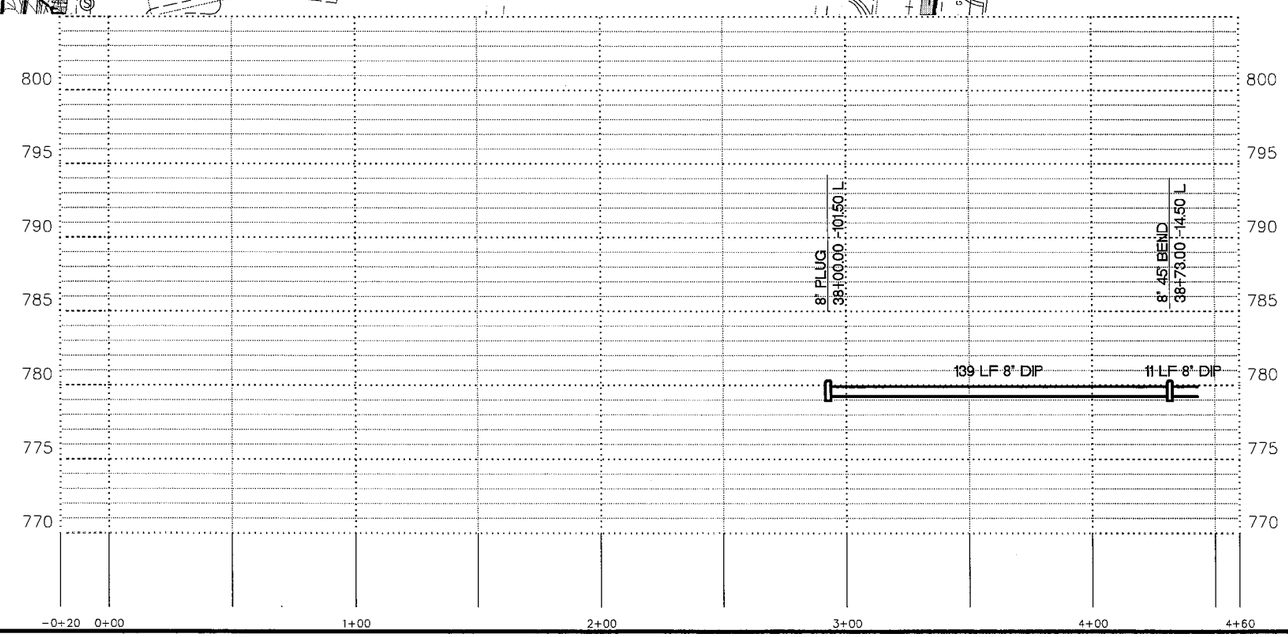

City of BURNSVILLE
ENGINEERING DEPARTMENT
100 Civic Center Parkway
Burnsville, MN 55337
Phone: 895-4530 <> Fax: 895-4404

I hereby certify that this plan, specification or report was prepared by me or under my direct supervision and that I am a duly Registered Professional Engineer under the laws of the State of Minnesota.
DATE 6/29/12 REG. NO. 42844

Date	Revision

Design By RDP | Checked By JAR | Drawn By DDK | Proj. No. 12-312

UTILITY PLAN & PROFILE
HIGHWAY 13
from Sta. 0+00 to Sta. 4+50

SP 1901-148
019-605-028
179-020-031
Sheet No.
U16 of U28

7/26/2012 4:22 PM S:\Projects\2012\12-312 5 and 13 Construction\Utilities and Plans\drawings\base.dwg

CONSTRUCTION PRIORITY
Contractor shall verify and locate all underground utility locations and elevations prior to construction with the respective utility companies.

NOTE:
WATERMAIN SHALL BE BURIED 7.5' MINIMUM

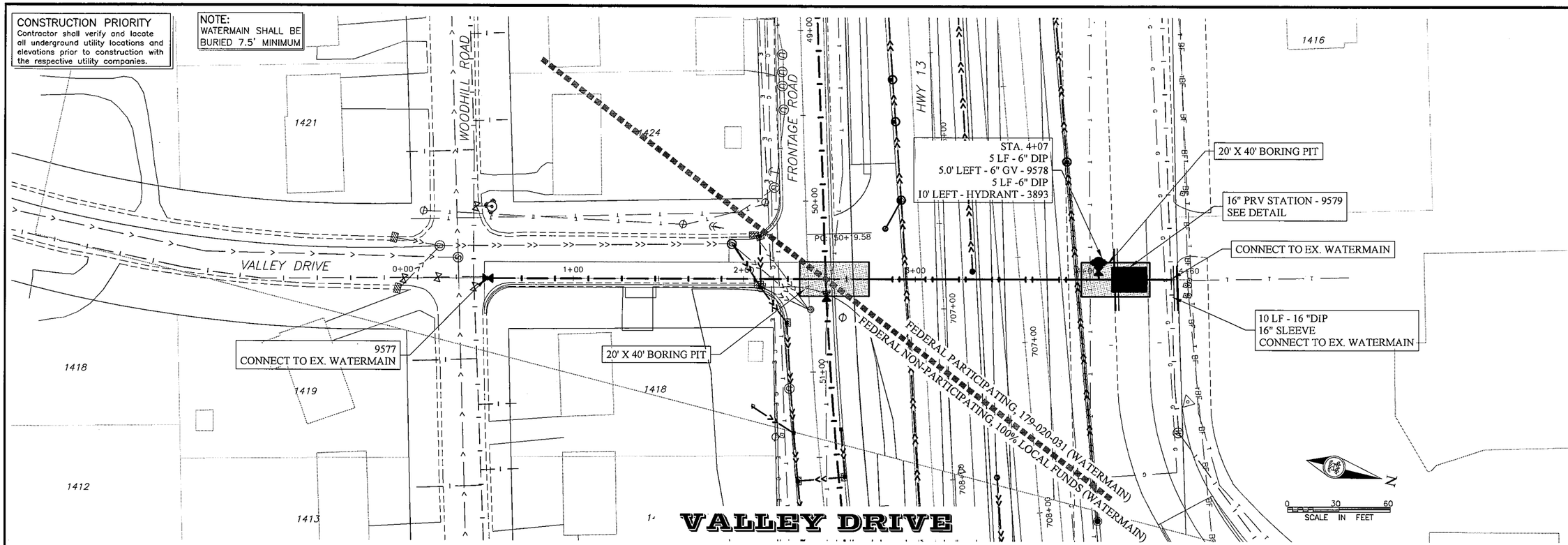

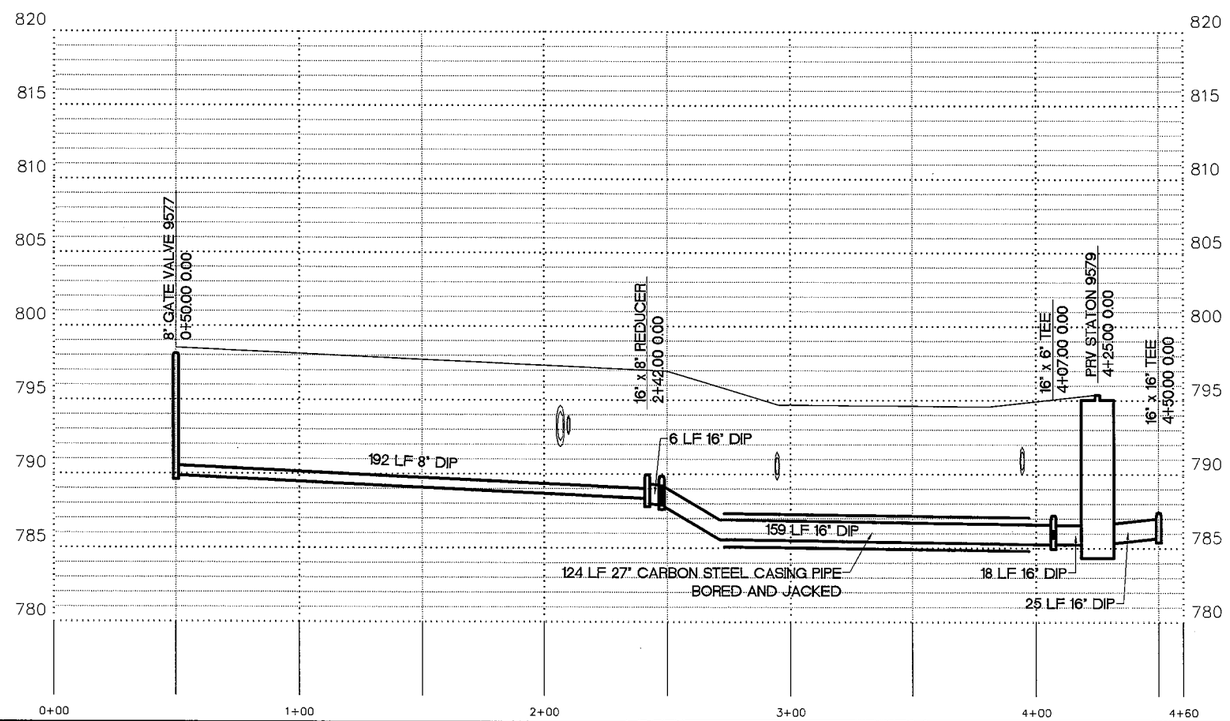

City of BURNSVILLE
ENGINEERING DEPARTMENT
100 Civic Center Parkway
Burnsville, MN 55337-3817
Phone: 895-4500 • Fax: 895-4104

I hereby certify that this plan, specification or report was prepared by me or under my direct supervision and that I am a duly Registered Professional Engineer under the laws of the State of Minnesota.

DATE 6/29/12 REG. NO. 42844

Date	Revision

Design By	Checked By	Drawn By	Proj. No.
RDP	JAR	DDK	12-312

UTILITY PLAN & PROFILE
VALLEY DRIVE
from Sta. 0+00 to Sta. 4+60

SP
1901-148
019-605-028
179-020-031
Sheet No.
U17 of U28

7/26/2012 4:23 PM S:\Projects\2012\12-312 5 and 13 Construction\Utilities and Plans\drawings\base.dwg

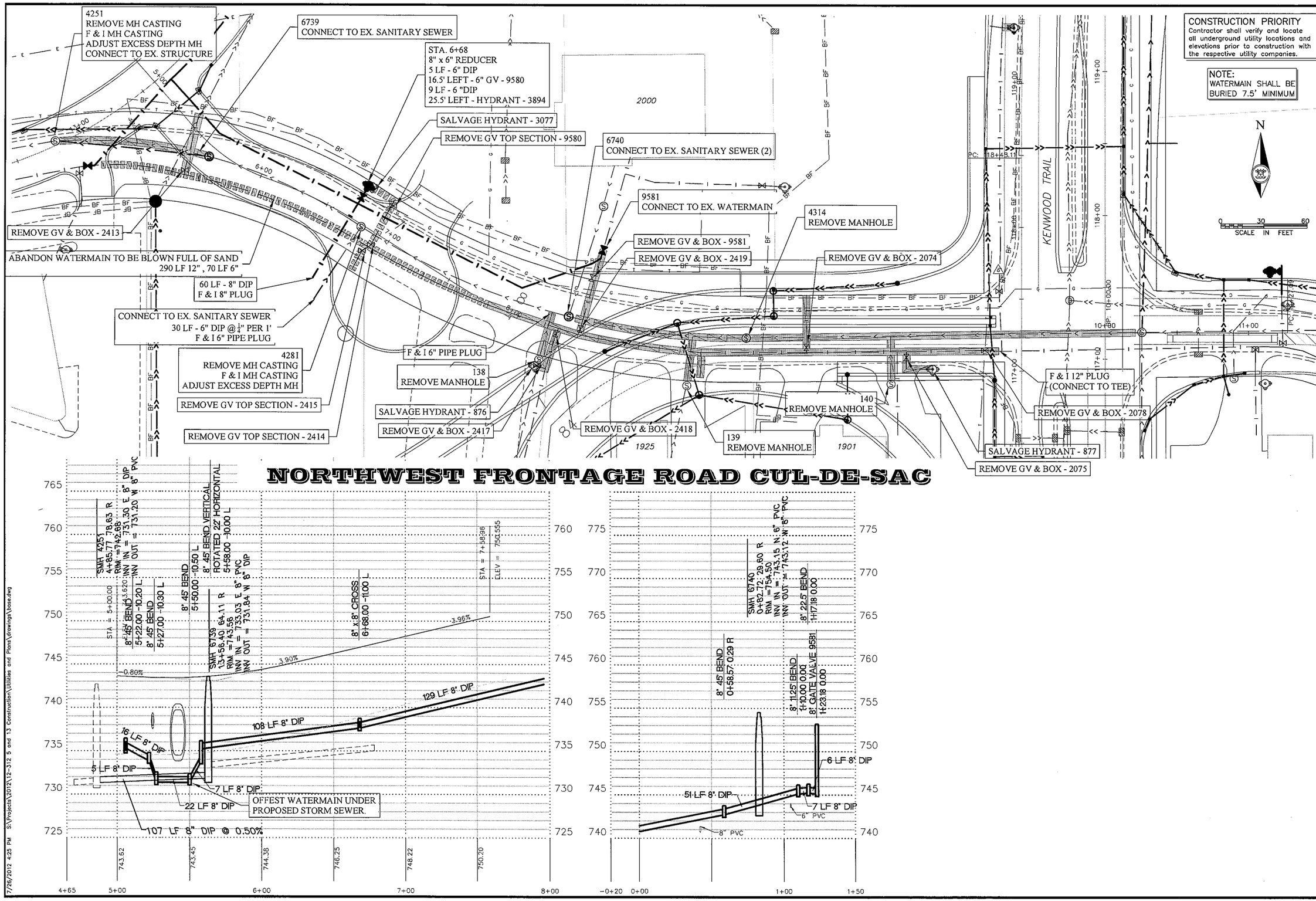

City of BURNSVILLE
ENGINEERING DEPARTMENT
100 Civic Center Parkway
Burnsville, MN 55337-3817
Phone: 895-4530 ◇ Fax: 895-4404

I hereby certify that this plan, specification or report was prepared by me or under my direct supervision and that I am a duly Registered Professional Engineer under the laws of the State of Minnesota.

DATE 6/29/12 REG. NO. 42844

Date	Revision

Design By RDP | Checked By JAR | Drawn By DDK | Proj. No. 12-312

UTILITY PLAN & PROFILE
NORTHWEST FRONTAGE ROAD CUL-DE-SAC
from Sta. 5+00 to Sta. 8+00

SP 1901-148
019-605-028
179-020-031

Sheet No.
U18 of U28

7/26/2012 4:25 PM S:\Projects\2012\12-312 5 and 13 Construction\Utilities and Plans\drawings\base.dwg

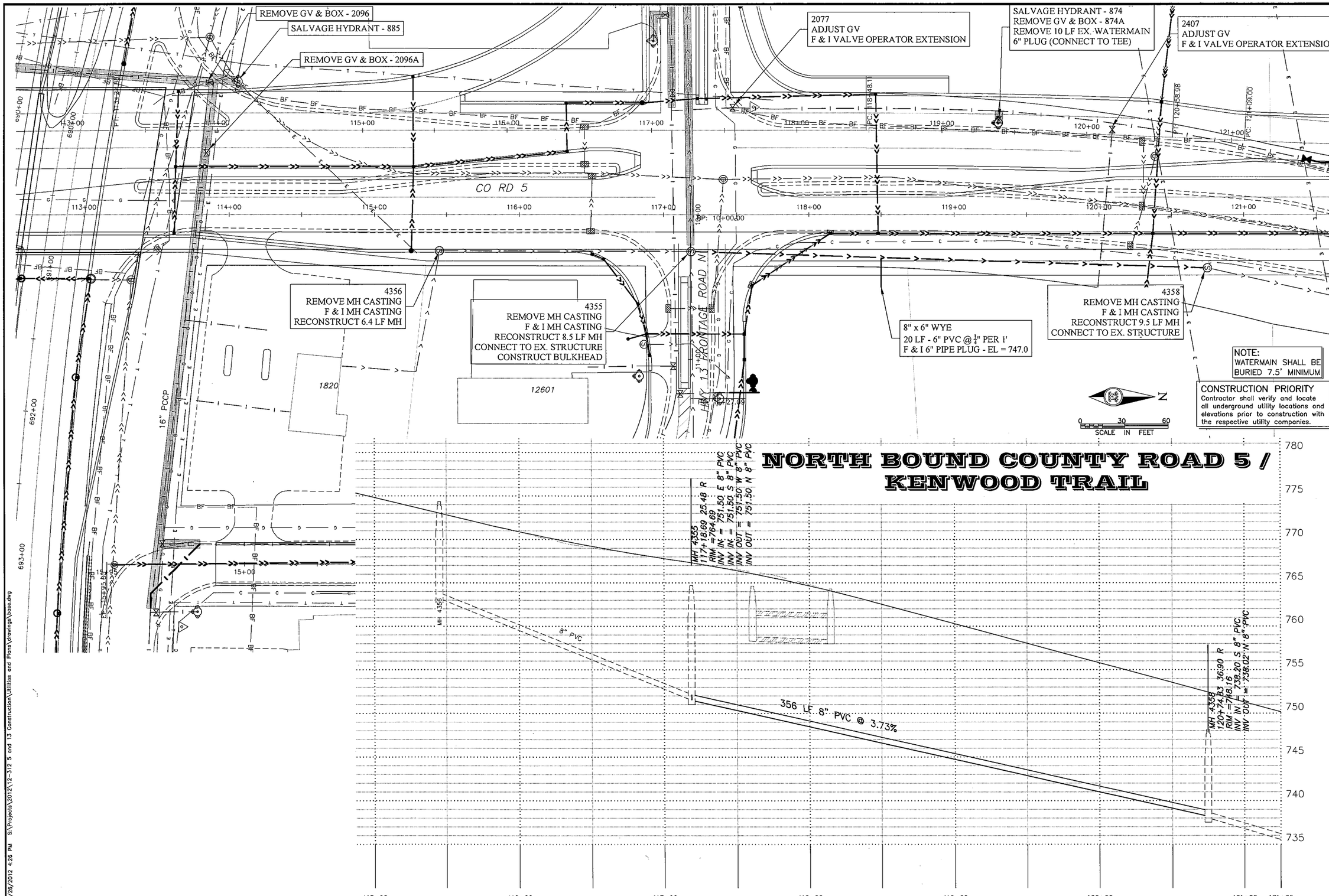

City of BURNSVILLE
ENGINEERING DEPARTMENT
100 Civic Center Parkway
Burnsville MN 55337-3817
Phone: 895-4530 ◇ Fax: 895-4404

I hereby certify that this plan, specification or report was prepared by me or under my direct supervision and that I am a duly Registered Professional Engineer under the laws of Minnesota.

DATE 6/29/12 REG. NO. 42844

Date	Revision	Design By RDP	Checked By JKR	Drawn By DDK	Proj. No. 12-312

UTILITY PLAN & PROFILE
NORTH BOUND COUNTY ROAD 5
from Sta. 114+00 to Sta. 122+00

SP
1901-148
019-605-028
179-020-031
Sheet No.
U19 of U28

7/26/2012 4:26 PM S:\Projects\2012\12-312 5 and 13 Construction\Utilities and Plans\drawings\bose.dwg

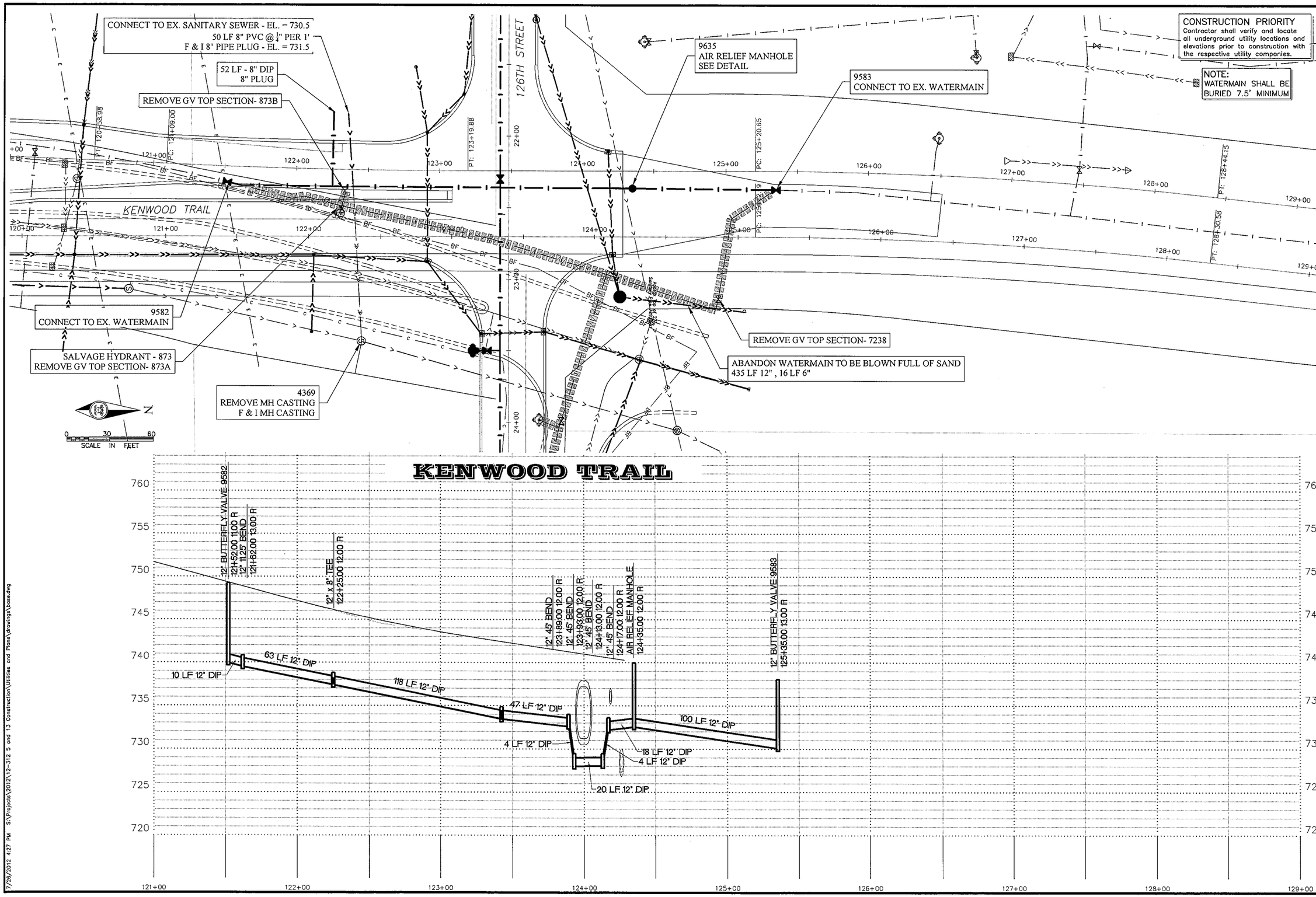

City of BURNSVILLE
ENGINEERING DEPARTMENT
100 Civic Center Parkway
Burnsville, MN 55337-3817
Phone: 895-4500 • Fax: 895-4404

I hereby certify that this plan, specification or report was prepared by me or under my direct supervision and that I am a duly Registered Professional Engineer under the laws of the State of Minnesota.

DATE 6/29/12 REG. NO. 42844

Date	Revision	Design By RDP	Checked By JAR	Drawn By DJK	Proj. No. 12-312

UTILITY PLAN & PROFILE
KENWOOD TRAIL
from Sta. 121+00 to Sta. 129+00

SP
1901-148
019-605-028
179-020-031

Sheet No.
U20 of U28

7/26/2012 4:27 PM S:\Projects\2012\12-312 5 and 13 Construction\Utilities and Plans\drawings\base.dwg

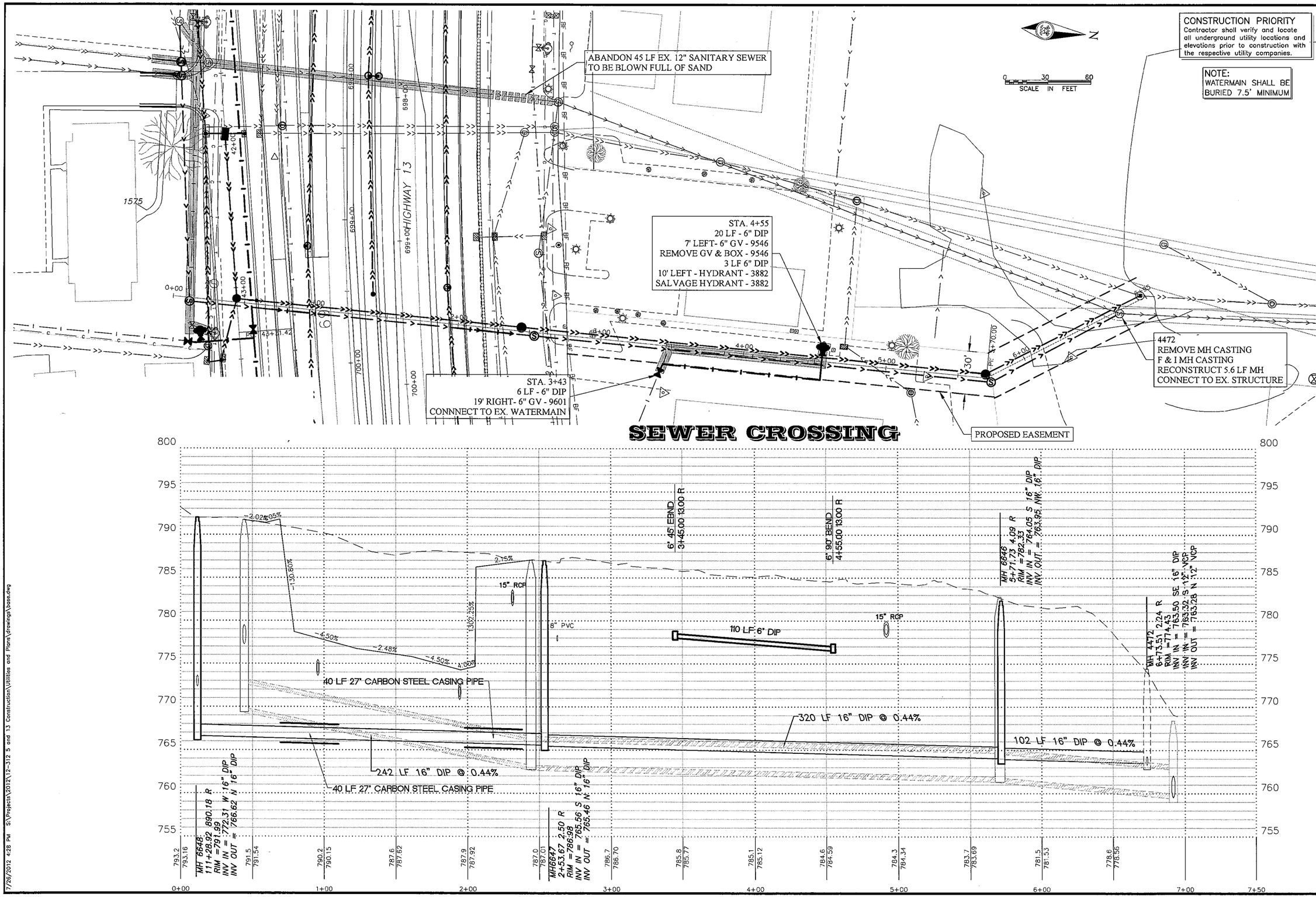

City of BURNSVILLE
ENGINEERING DEPARTMENT
100 Civic Center Parkway
Burnsville, MN 55337-3817
Phone: 895-4520 ◇ Fax: 895-4404

I hereby certify that this plan, specification or report was prepared by me or under my direct supervision and that I am a duly Registered Professional Engineer under the laws of the State of Minnesota.

DATE 6/28/12 REG. NO. 42844

Date	Revision

Design By	Checked By	Drawn By	Proj. No.
RDP	JAR	DDK	12-312

UTILITY PLAN & PROFILE
STORM AND SANITARY SEWER CROSSING
HIGHWAY 13

SP
1901-148
019-605-028
179-020-031

Sheet No.
U21 of U28

7/26/2012 4:28 PM S:\Projects\2012\12-312 5 and 13 Construction\Utilities and Plans\drawings\base.dwg

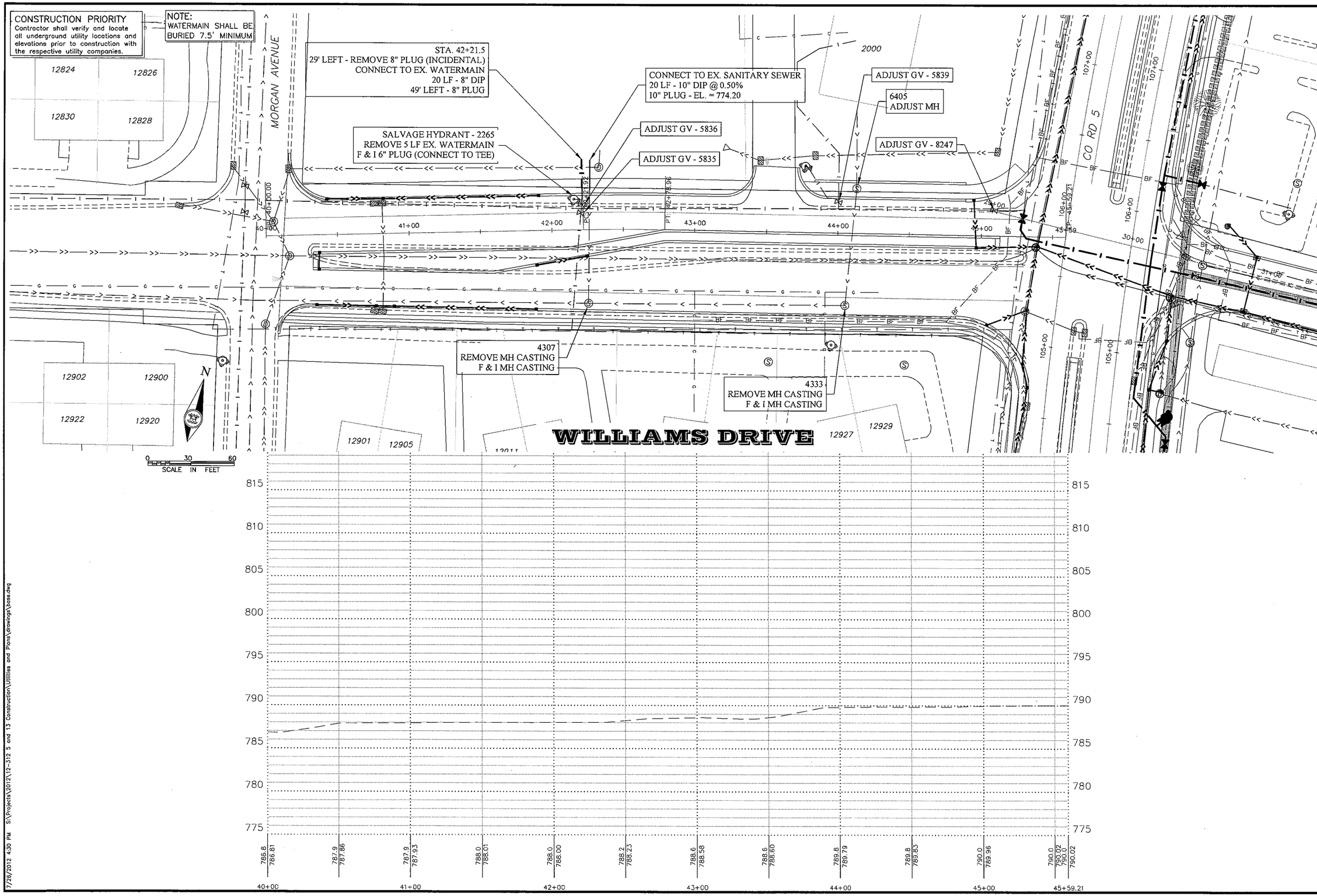

City of BURNSVILLE
ENGINEERING DEPARTMENT
100 Civic Center Parkway
Burnsville, MN 55337-3817
Phone: 895-4530 • Fax: 895-4404

I hereby certify that this plan, specification or report was prepared by me or under my direct supervision and that I am a duly Registered Professional Engineer under the laws of the State of Minnesota.

DATE 6/29/12 REG. NO. 42844

Date	Revision

Design By RDP | Checked By JAR | Drawn By DDK | Proj. No. 12-312

UTILITY PLAN & PROFILE
WILLIAMS DRIVE
from Sta. 40+00 to Sta. 45+00

SP 1901-148
019-605-028
179-020-031
Sheet No.
U22 of U28

7/26/2012 4:30 PM S:\Projects\2012\12-312 5 and 13 Construction\Utilities and Plans\drawings\bcas.dwg

CONSTRUCTION PRIORITY
Contractor shall verify and locate all underground utility locations and elevations prior to construction with the respective utility companies.

NOTE:
WATERMAIN SHALL BE BURIED 7.5' MINIMUM

FIELD VERIFY CLEAN OUT
F & I MANHOLE - 6741
CONNECT TO EX SANITARY SEWER (2)

STA. 15+65 - 30' LEFT
FIELD VERIFY EXISTING FITTINGS (INCIDENTAL)
CONNECT TO EX. WATERMAIN
F & I 16" PCCP TO DIP ADAPTER
5 LF - 16" DIP

STA. 15+65 - 25' LEFT
16" x 12" REDUCER
5 LF - 12" DIP

4394
REMOVE MH CASTING
F & I MH CASTING
ADJUST EXCESS DEPTH MH

SALVAGE HYDRANT - 3897
REMOVE 5 LF EX. WATERMAIN
F & I 6" PLUG (CONNECT TO TEE)

REMOVE 6" PLUG (INCIDENTAL)
CONNECT TO EX. WATERMAIN
16 LF - 6" DIP
6" x 6" TEE
4 LF - 6" DIP
6" PLUG

4 LF - 6" DIP
6" GV - 9603
4 LF - 6" DIP
HYDRANT- 9897

ADJUST GV - 2081

ADJUST GV - 2080

I41
REMOVE MH CASTING
F & I MH CASTING
ADJUST EXCESS DEPTH MH

CONNECT TO EX. WATERMAIN

REMOVE GV & BOX

HWY 13 FRONTAGE ROAD N

1800 12601 1820

16" PCCP

N

0 30 60
SCALE IN FEET

NORTHEAST FRONTAGE ROAD

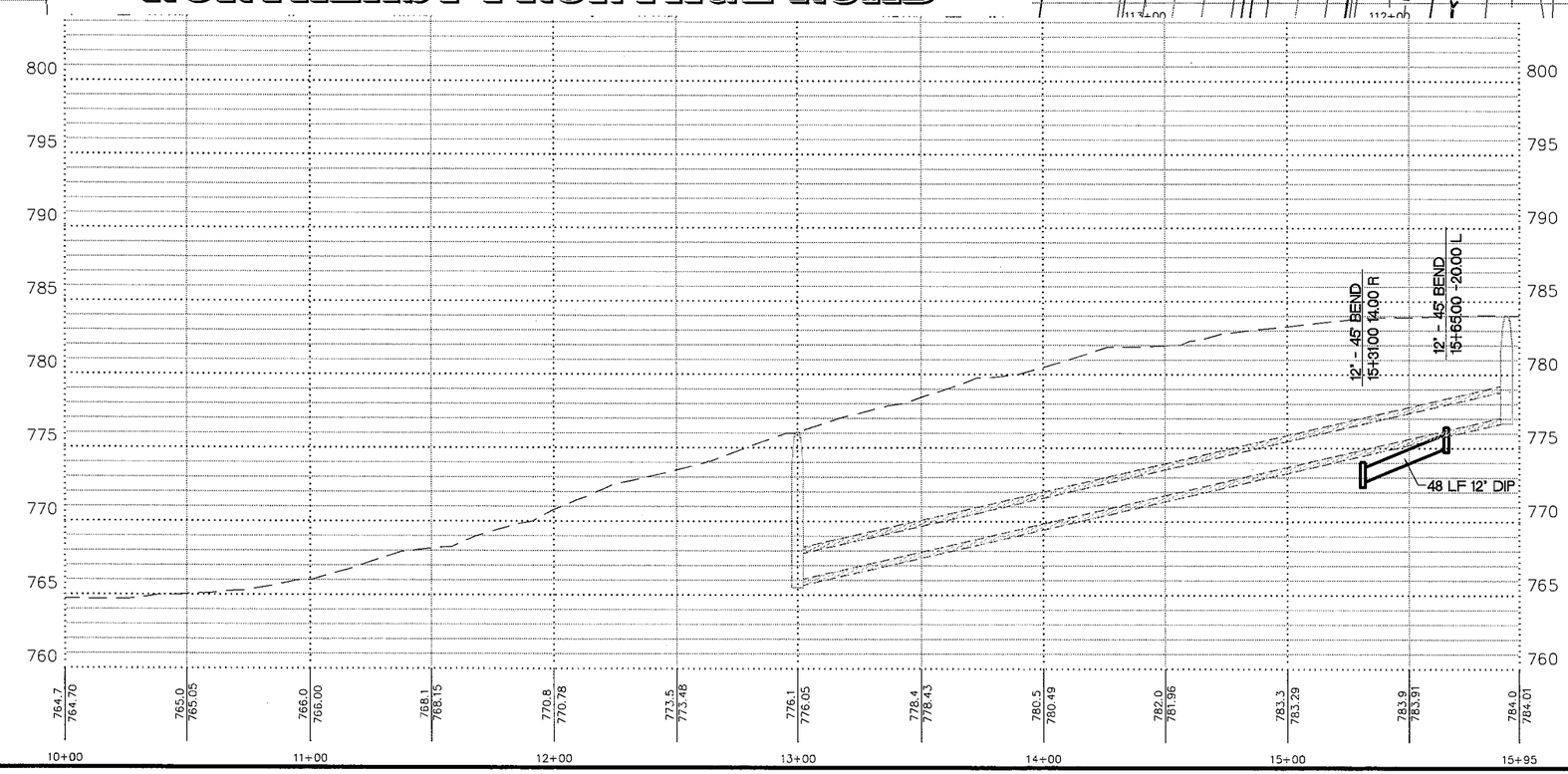

City of BURNSVILLE
ENGINEERING DEPARTMENT
100 CIVIC CENTER WAY
BURNSVILLE, MN 55337
Phone: 895-4530 <> Fax: 895-4404

I hereby certify that this plan, specification or report was prepared by me or under my direct supervision and that I am a duly Registered Professional Engineer under the laws of the State of Minnesota.

DATE 6/29/12 REG. NO. 42844

Date	Revision

Design By RDP | Checked By JAR | Drawn By DDK | Proj. No. 12-312

UTILITY PLAN & PROFILE
NORTHEAST FRONTAGE ROAD
from Sta. 10+00 to Sta. 15+95

SP
1901-148
019-605-028
179-020-031

Sheet No.
U23 of U28

7/26/2012 4:31 PM S:\Projects\2012\12-312 5 and 13 Construction\Utilities and Plans\drawings\base.dwg

CONSTRUCTION PRIORITY
Contractor shall verify and locate all underground utility locations and elevations prior to construction with the respective utility companies.

NOTE:
WATERMAIN SHALL BE BURIED 7.5' MINIMUM

NORTH FRONTAGE ROAD

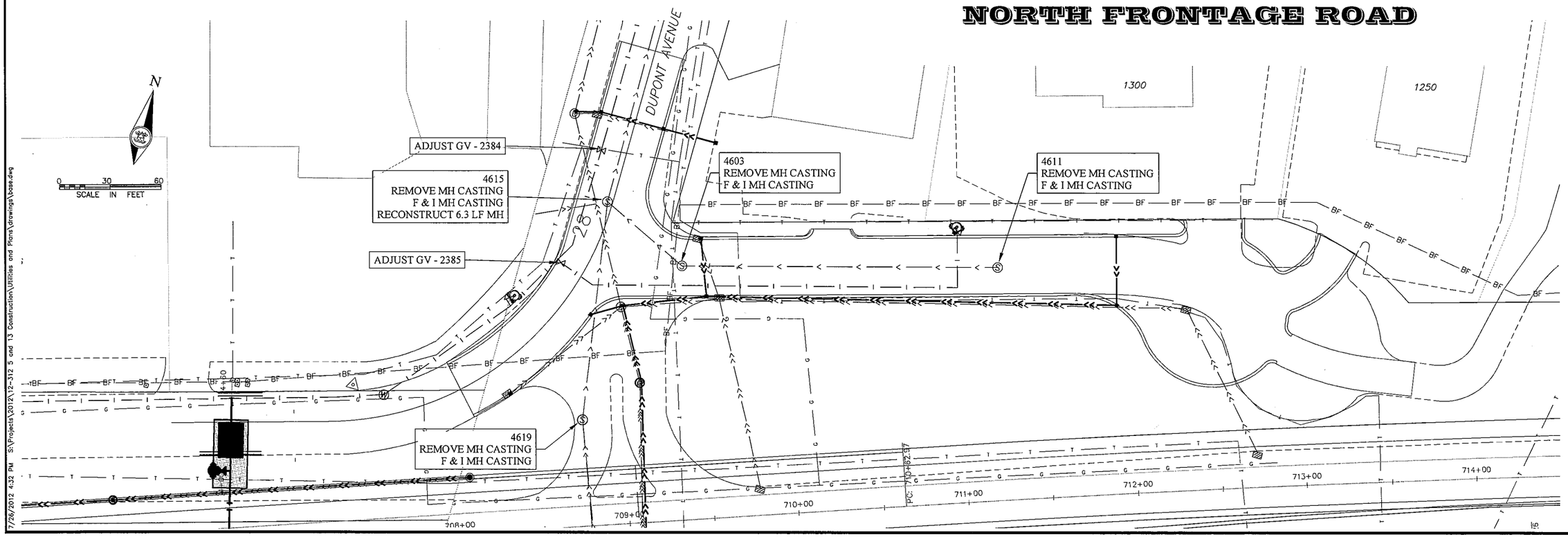

7/26/2012 4:32 PM S:\Projects\2012\12-312 5 and 13 Construction\Utilities and Plans\drawings\base.dwg

City of BURNSVILLE
ENGINEERING DEPARTMENT
100 Civic Center Parkway
Burnsville, MN 55337-3817
Phone: 895-4530 ◇ Fax: 895-4404

I hereby certify that this plan, specification or report was prepared by me or under my direct supervision and that I am a duly Registered Professional Engineer under the laws of the State of Minnesota.

DATE 6/29/12 REG. NO. 42844

Date	Revision

Design By	Checked By	Drawn By	Proj. No.
RDP	JAR	DJK	12-312

UTILITY PLAN & PROFILE
NORTH FRONTAGE ROAD

SP
1901-148
019-605-028
179-020-031

Sheet No.
U24 of U28

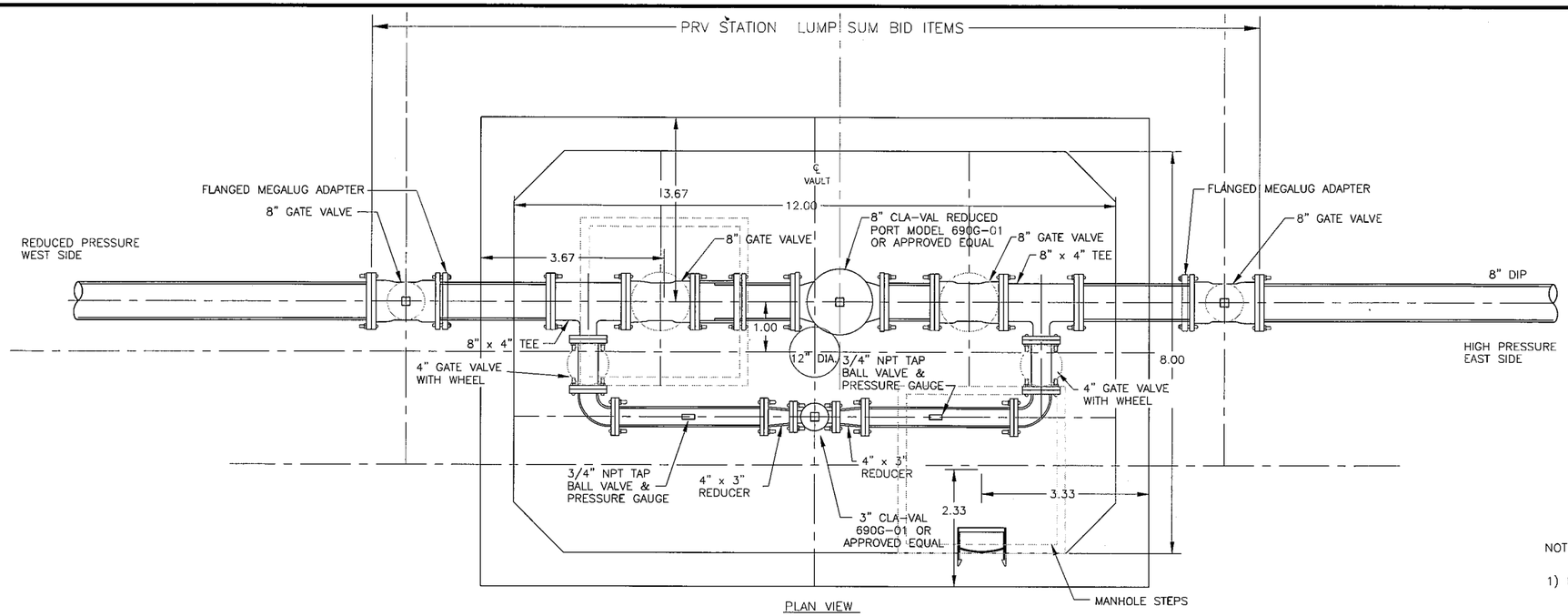

PLAN VIEW

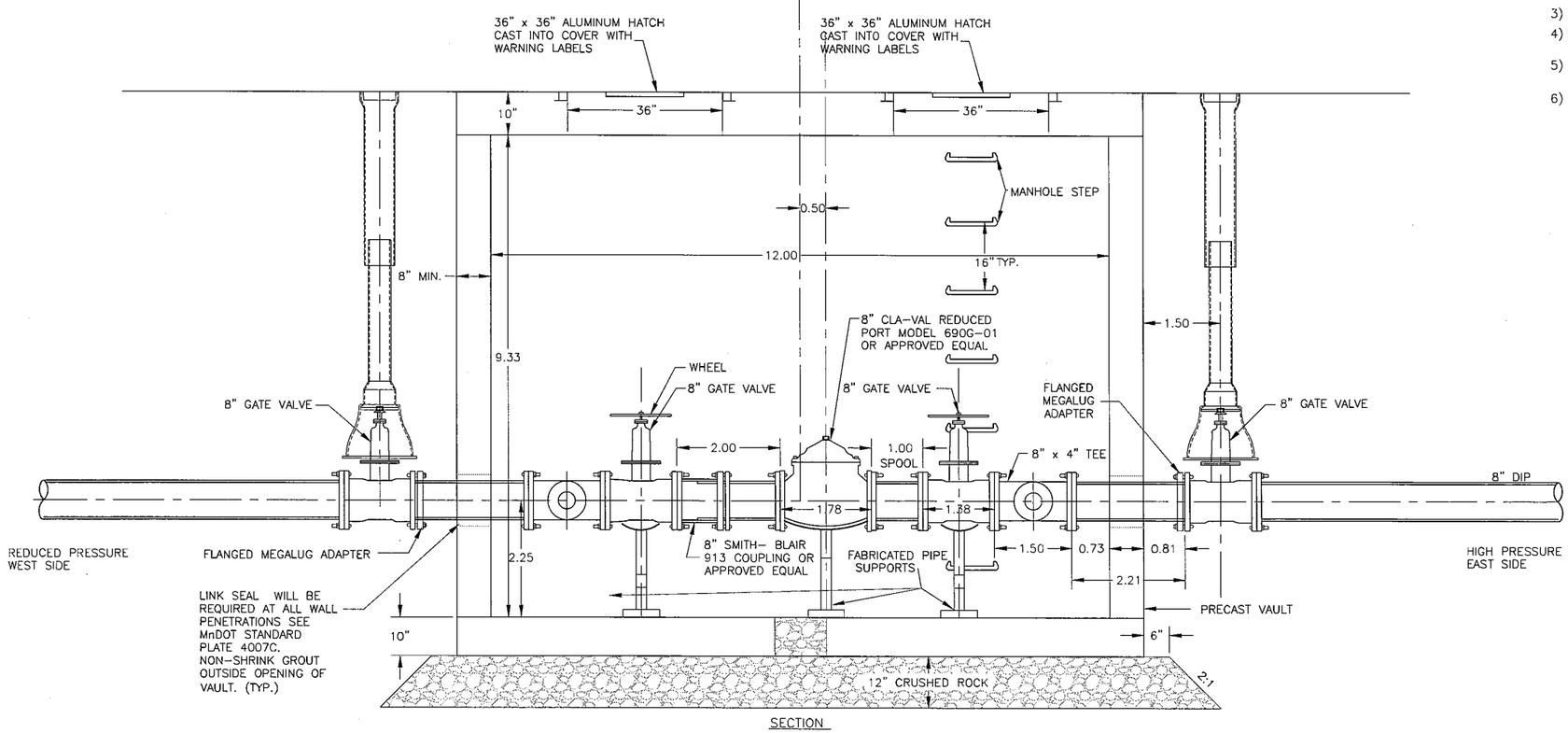

SECTION

NOTES:

1) LUMP SUM BID ITEM SHALL INCLUDE FURNISHING & INSTALLING BASE, VAULT, MANHOLE SECTIONS, VALVE BOX SECTIONS, CASTINGS, VALVES, FITTINGS AND ALL OTHER MATERIAL NECESSARY FOR CONSTRUCTING THE STATION.
2) ALL INTERNAL FLANGES, FITTINGS AND PIPING SHALL BE RATED FOR 250 PSI AND BE DIP, CLASS 52.
3) ALL PIPE, FITTINGS AND VALVES IN VAULT SHALL BE FLANGED.
4) ALL JOINTS WITHIN 30' OF EITHER SIDE OF THE VAULT SHALL HAVE MEGA-LUG MECHANICAL JOINT CONNECTIONS.
5) INSTALLATION SHALL INCLUDE START UP SERVICE AND OPERATION TRAINING
6) MANHOLE STEPS SHALL BE ALUMINUM OR 304 STAINLESS STEEL MANHOLE STEPS PER OSHA REQUIREMENTS.

City of BURNSVILLE
ENGINEERING DEPARTMENT
100 Civic Center Parkway
Burnsville, MN 55337
Phone: 895-4530 ◇ Fax: 895-4404

I hereby certify that this plan, specification or report was prepared by me or under my direct supervision and that I am a duly Registered Professional Engineer under the laws of the State of Minnesota.

DATE 6/29/12 REG. NO. 42844

Date	Revision

Design By	Checked By	Drawn By	Proj. No.
RDP	JAR	DDK	12-312

PRESSURE REDUCING STATION DETAIL
SOUTHEAST FRONTAGE ROAD
STATION 64+53 – 38' RIGHT

SP 1901-148
019-605-028
179-020-031

Sheet No.
U25 of U28

7/26/2012 4:38 PM S:\Projects\2012\12-312 5 and 13 Construction\Utilities and Plans\drawings\prv_detail.dwg

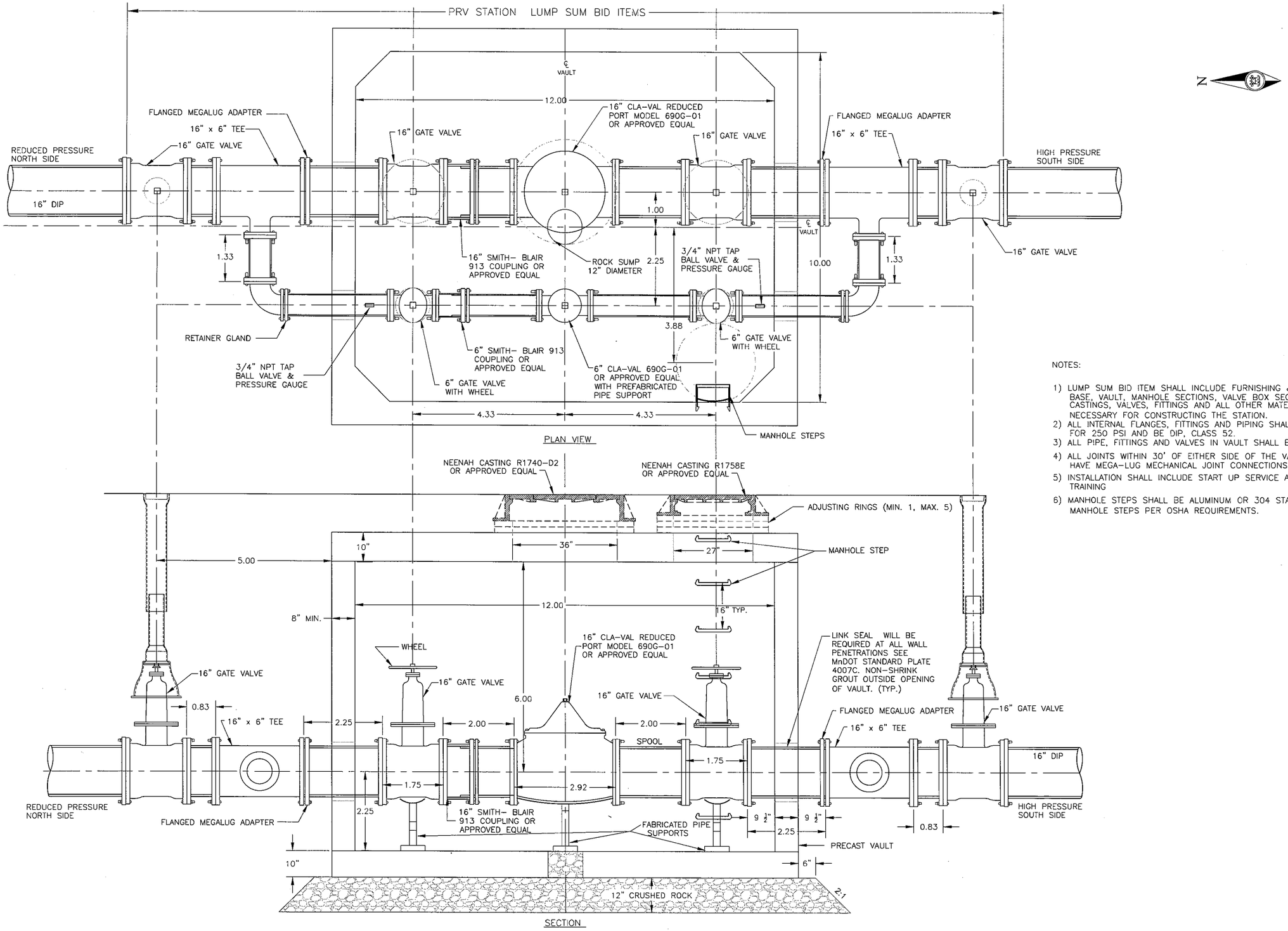

NOTES:

1) LUMP SUM BID ITEM SHALL INCLUDE FURNISHING & INSTALLING BASE, VAULT, MANHOLE SECTIONS, VALVE BOX SECTIONS, CASTINGS, VALVES, FITTINGS AND ALL OTHER MATERIAL NECESSARY FOR CONSTRUCTING THE STATION.
2) ALL INTERNAL FLANGES, FITTINGS AND PIPING SHALL BE RATED FOR 250 PSI AND BE DIP, CLASS 52.
3) ALL PIPE, FITTINGS AND VALVES IN VAULT SHALL BE FLANGED.
4) ALL JOINTS WITHIN 30' OF EITHER SIDE OF THE VAULT SHALL HAVE MEGA-LUG MECHANICAL JOINT CONNECTIONS.
5) INSTALLATION SHALL INCLUDE START UP SERVICE AND OPERATION TRAINING
6) MANHOLE STEPS SHALL BE ALUMINUM OR 304 STAINLESS STEEL MANHOLE STEPS PER OSHA REQUIREMENTS.

City of BURNSVILLE
ENGINEERING DEPARTMENT
100 Civic Center Parkway
Burnsville MN 55337-3817
Phone: 895-4530 ◇ Fax: 895-4404

I hereby certify that this plan, specification or report was prepared by me or under my direct supervision and that I am a duly Registered Professional Engineer under the laws of the State of Minnesota.

DATE 6/29/12 REG. NO. 42844

Date	Revision	Design By	Checked By	Drawn By	Proj. No.
		RDP	JAR	DDK	12-312

PRESSURE REDUCING STATION DETAIL
VALLEY DRIVE
STATION 4+25

SP
1901-148
019-605-028
179-020-031
Sheet No.
U26 of U28

7/26/2012 4:35 PM S:\Projects\2012\12-312 5 and 13 Construction\Utilities and Plans\drawings\prv_detail.dwg

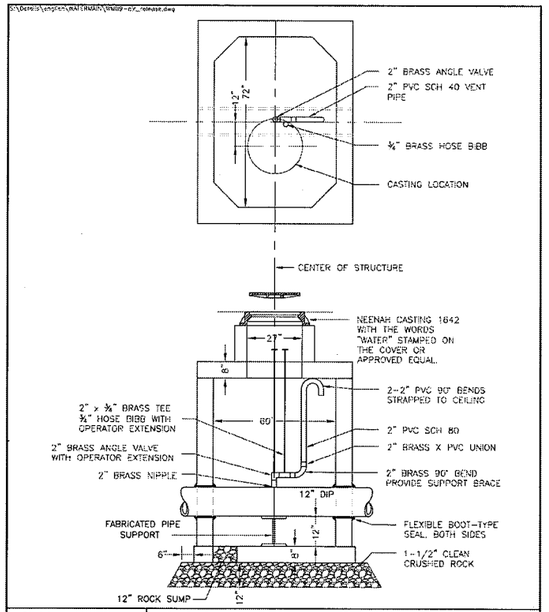

PLATE NO.	WM – 9		
REVISED	05/12		

CITY OF BURNSVILLE - ENGNEERING DEPT.

AIR RELEASE MANHOLE (MANUAL)

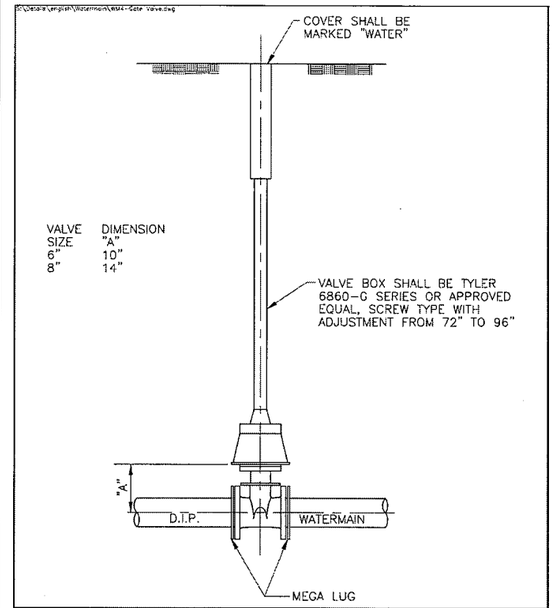

PLATE NO.	WM – 4		
REVISED	02/02	10/03	

CITY OF BURNSVILLE - ENGNEERING DEPT.

VALVE BOX INSTALLATION

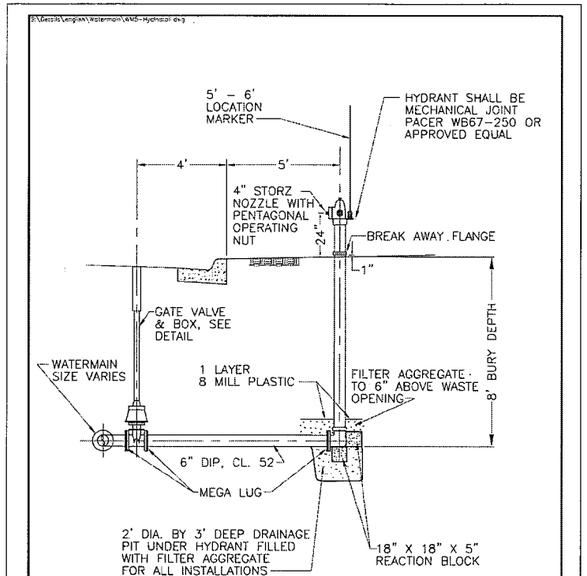

PLATE NO.	WM – 5		
REVISED	11/99	02/02	
10/03	04/06	02/12	

CITY OF BURNSVILLE - ENGNEERING DEPT.

HYDRANT INSTALLATION

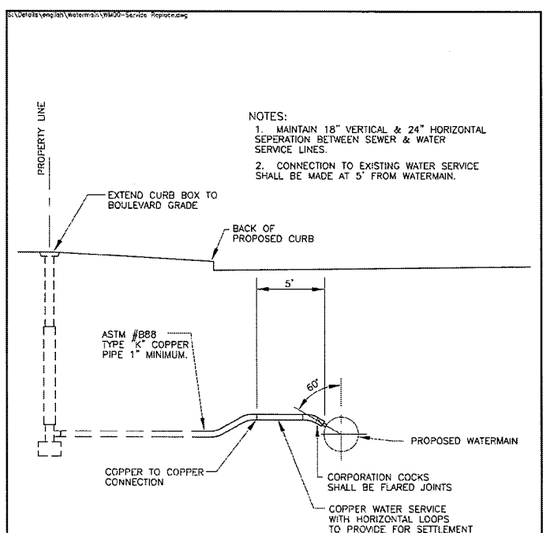

PLATE NO.	WM – 3		
REVISED	10/03		

CITY OF BURNSVILLE - ENGNEERING DEPT.

WATER SERVICE CONNECTION

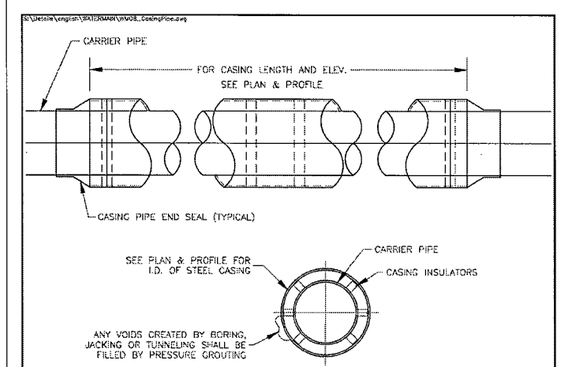

NOTE:
1. ALL JOINTS OF CARRIER PIPE WITHIN CASING SHALL BE WELDED INSIDE AND OUT OR RESTRAINED (DUCTILE IRON).
2. CASING INSULATORS SHALL BE HEAVY-DUTY PLASTIC OR STEEL TYPE. INSTALL ON 10' CENTERS. ADDITIONAL INSULATORS AS NECESSARY FOR PLACEMENT WITHIN 2' OF END OF CASING.
3. INSULATORS SHALL BE CENTERED/RESTRAINED TYPE.
4. FILL ANNULAR SPACE BETWEEN CASING AND CARRIER PIPE WITH SAND.

PLATE THICKNESS OF CASING PIPE				
DIAMETER	TO 12"	15" TO 24"	24" TO 34"	36" TO 72"
MINIMUM THICKNESS	1/4"	3/8"	1/2"	5/8"

CASING SHALL BE SMOOTH STEEL PIPE

PLATE NO.	WM – 8		
REVISED	3/12		

CITY OF BURNSVILLE - ENGNEERING DEPT.

CASING PIPE DETAIL

City of BURNSVILLE
ENGINEERING DEPARTMENT
100 Civic Center Parkway
Burnsville, MN 55337
Phone: 895-4530 <> Fax: 895-4104

I hereby certify that this plan, specification or report was prepared by me or under my direct supervision and that I am a duly Registered Professional Engineer under the laws of the State of Minnesota.

DATE 6/29/12 REG. NO. 42844

Date	Revision	Design By	Checked By	Drawn By	Prog. No.
		RDP	JAR	DDK	12-312

WATERMAIN DETAILS

CO RD 5 / HWY 13

CITY PROJ. 05-105

SP 1901-148
019-605-028
179-020-031

Sheet No.

U27 of U28

7/26/2012 4:35 PM S:\Projects\2012\12-312 5 and 13 Construction\Utilities and Plans\Drawings\Title.dwg

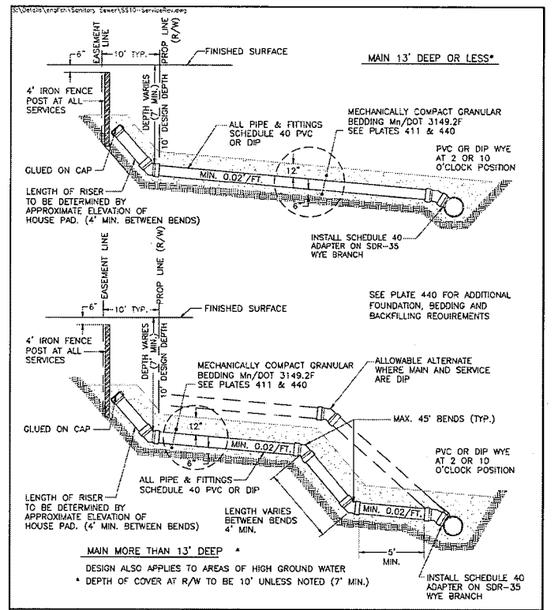

PLATE NO.	SS – 10		
REVISED	06/99	02/02	
10/02			

CITY OF BURNSVILLE - ENGNEERING DEPT.

SANITARY SEWER SERVICE

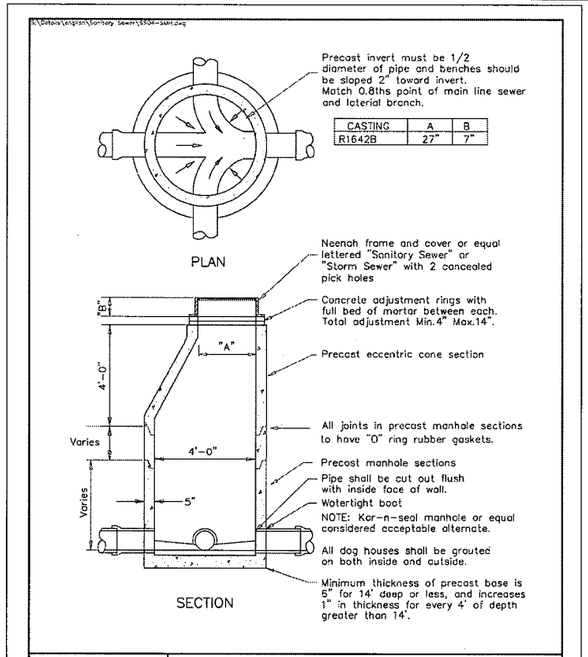

CASTING	A	B
R1642B	27"	7"

PLATE NO.	SS – 4		
REVISED	10/02	2/12	

CITY OF BURNSVILLE - ENGNEERING DEPT.

SANITARY MANHOLE

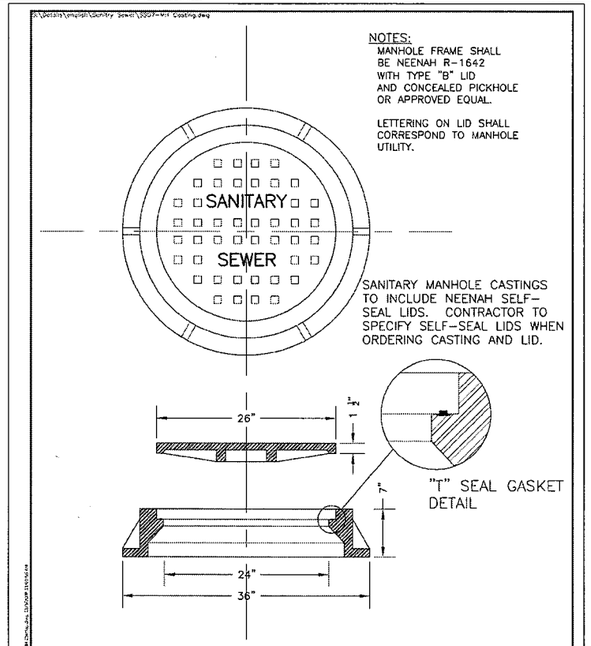

PLATE NO.	SS – 7		
REVISED	05/99	10/02	
10/03	12/08		

CITY OF BURNSVILLE - ENGNEERING DEPT.

MANHOLE CASTING AND COVER

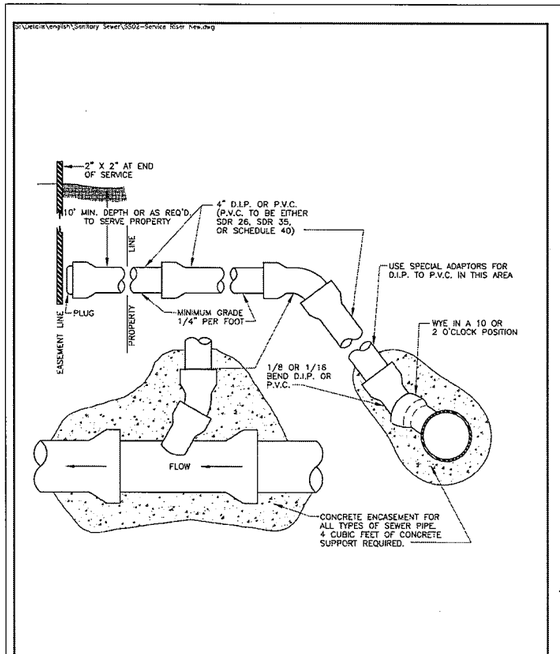

PLATE NO.	SS – 2		
REVISED	03/03		

CITY OF BURNSVILLE - ENGNEERING DEPT.

SANITARY SEWER SERVICE RISER

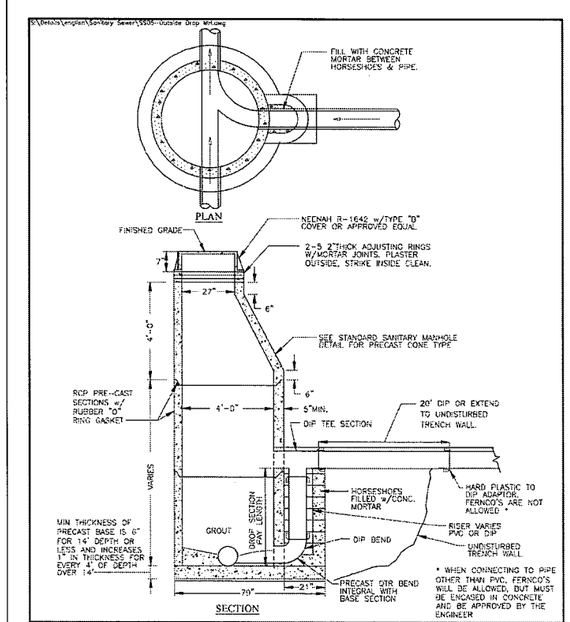

PLATE NO.	SS – 5		
REVISED	10/02	8/11	
2/12			

CITY OF BURNSVILLE - ENGNEERING DEPT.

OUTSIDE DROP SECTION SANITARY MANHOLE

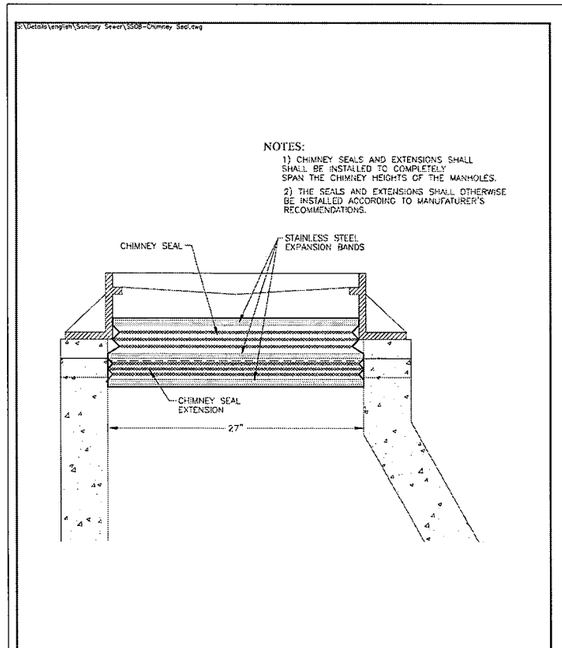

PLATE NO.	SS – 8		
REVISED	06/99	10/02	

CITY OF BURNSVILLE - ENGNEERING DEPT.

INTERNAL CHIMNEY SEAL

City of BURNSVILLE
ENGINEERING DEPARTMENT
100 Civic Center Parkway
Burnsville, MN 55337
Phone: 895-4530 <> Fax: 895-4404

I hereby certify that this plan, specification or report was prepared by me or under my direct supervision and that I am a duly Registered Professional Engineer under the laws of the State of Minnesota.

DATE 6/29/12 REG. NO. 42844

Date	Revision

Design By	Checked By	Drawn By	Proj. No.
RDP	JAR	DDK	12-312

SANITARY SEWER DETAILS

CO RD 5 / HWY 13

CITY PROJ. 2-312

SP 1901-148
019-605-028
179-020-031

Sheet No.

U28 of U28

7/26/2012 4:35 PM S:\Projects\2012\12-312 5 and 13 Construction\Utilities and Plans\drawings\Title.dwg

PLOTTED/REVISED: 6/14/2012
DISTRICT *: METRO
IPLOT NAME: t_typicals_tc_1sh
PATH & FILENAME: IP_PWPdl44345\N_typicals_tc_1sh.dgn

NOTES & GUIDELINES

GENERAL INFORMATION:

1. THE CONTRACTOR SHALL FURNISH, INSTALL AND MAINTAIN THE DEVICES IN THIS TRAFFIC CONTROL PLAN UNLESS OTHERWISE NOTED.
2. FIELD CONDITIONS MAY REQUIRE MODIFICATIONS OF THIS LAYOUT AS DEEMED NECESSARY BY THE ENGINEER.
3. ALL DISTANCES ARE APPROXIMATE.
4. THE CONTRACTOR IS RESPONSIBLE FOR PROTECTING ANY WORK AREAS NEAR TRAFFIC IN ACCORDANCE WITH THE MNMUTCD.
5. AN ANNUAL FALL REVIEW OF ALL TRAFFIC CONTROLS WILL BE MADE TO PREPARE FOR WINTER MAINTENANCE OF THE PROJECT. THIS MAY INCLUDE ADJUSTMENTS OR EXCHANGE OF ONE TRAFFIC CONTROL DEVICE FOR ANOTHER. READJUSTMENTS MAY AGAIN BE REQUIRED IN THE SPRING.
6. IF THE CONTRACTOR DECIDES TO PERFORM THE CONSTRUCTION WORK IN A SEQUENCE OTHER THAN SHOWN IN THIS TRAFFIC CONTROL PLAN THE CONTRACTOR SHALL PROVIDE COMPLETE REVISED TRAFFIC CONTROL PLANS TO BE APPROVED BY THE ENGINEER.

SIGNING:

1. ALL TRAFFIC CONTROL DEVICES, INCLUDING OVERHEAD SIGNS ON ROADS OPEN TO TRAFFIC THAT ARE NOT CONSISTENT WITH TRAFFIC OPERATION SHALL BE COVERED, REMOVED OR REVISED AS DIRECTED BY THE ENGINEER.
2. WHEN SIGNS ARE PLACED, THEY SHALL BE MOUNTED ON POSTS DRIVEN INTO THE GROUND AT THE PROPER HEIGHT AND LATERAL OFFSET AS SHOWN IN THE TYPICAL TEMP SIGN FRAMING & INSTALLATION DETAILS IN THE PLAN. IF THIS IS NOT POSSIBLE THEY WILL BE MOUNTED ON PORTABLE SUPPORTS AS APPROVED BY THE ENGINEER. WHEN THE SIGNS ARE REMOVED THE SIGN POSTS SHALL ALSO BE REMOVED AS SOON AS POSSIBLE.
3. THE CONTRACTOR SHALL BE RESPONSIBLE FOR ANY EXTRA SIGNING NEEDED TO FACILITATE TRAFFIC SWITCHES OR FOR TRANSITIONING TRAFFIC FROM ONE STAGE TO ANOTHER.
4. ALL ORANGE WARNING AND ORANGE GUIDE SIGNS SHALL BE FABRICATED WITH SIGN SHEETING MATERIAL AS LISTED ON THE MN/DOT APPROVED PRODUCT LIST FOR "SHEETING FOR RIGID TEMPORARY WORK ZONE SIGNS".

   BARRICADES SHALL BE FABRICATED WITH SIGN SHEETING MATERIAL AS LISTED ON THE MN/DOT APPROVED PRODUCT LIST FOR BARRICADE SHEETING. NOTE THAT ASTM TYPE VII SHEETING IS NOT ALLOWED ON BARRICADES AFTER JANUARY 1, 2010.
5. LONGITUDINAL DROPOFFS SHALL BE SIGNED AS SHOWN IN THE "TEMPORARY TRAFFIC CONTROL ZONE LAYOUTS" FIELD MANUAL UNLESS OTHERWISE SPECIFIED IN THESE PLANS.
6. THE CONTRACTOR SHALL COORDINATE THE INSTALLATION OF THE FINAL SIGNS TO ASSURE THAT THE FINAL SIGNS ARE INSTALLED AS NEEDED, OR PROVIDE TEMPORARY SIGNING AT THEIR EXPENSE UNTIL THE FINAL SIGNING IS PLACED.

PAVEMENT MARKING:

1. OBLITERATE ANY CONFLICTING PAVEMENT MARKINGS AS DIRECTED BY THE ENGINEER.
2. PAINT, POLYMER LANE TAPE AND/OR TRPM'S ARE ACCEPTABLE TEMPORARY STRIPING ALTERNATIVES ACCORDING TO ACTUAL CONDITIONS ENCOUNTERED AS DIRECTED BY THE ENGINEER. GENERALLY, ONLY PAINT WILL BE USED BEFORE MAY 1ST OR WHEN THE OTHER MANUFACTURERS' SPECIFICATIONS CAN NOT BE MET.
3. TRPM'S (TEMPORARY RAISED PAVEMENT MARKERS) SHOULD BE USED TO SUPPLEMENT THE LONG TERM (MORE THAN 3 DAYS) EDGELINES ON ALL TRANSITION AREAS WHEN THE CONDITIONS ARE WITHIN THE MANUFACTURERS' SPECIFICATIONS.
4. THE CONTRACTOR SHALL BE RESPONSIBLE FOR THE LOCATION AND PLACEMENT OF TEMPORARY AND FINAL STRIPING. MN/DOT TRAFFIC PERSONNEL WILL ASSIST IN THE SPOTTING OF TRANSITION AREAS, GORES AND TAPERS.

BARRIER & DELINEATION:

1. TOP MOUNTED BARRIER DELINEATORS WILL HAVE A MINIMUM OF 24 SQ. IN. OF REFLECTIVE SURFACE AREA AND BE PLACED AT 30' SPACES ON TOP OF THE BARRIER WHEN THE BARRIER IS WITHIN 10' OF TRAFFIC UNLESS OTHERWISE NOTED OR AS DIRECTED BY THE ENGINEER. IF THE TRAFFIC ENGINEER REQUIRES SIDE MOUNTED BARRIER DELINEATORS, THEY WILL HAVE A MINIMUM OF 12 SQ. IN. OF REFLECTIVE SURFACE AREA AND BE PLACED AT 30' SPACES. IF A SMALLER APPROVED BARRIER DELINEATOR IS USED IT SHALL BE AT ONE HALF THE SPACING AND ONE HALF THE BID PRICE.

CONSTRUCTION INFORMATION SIGNING:

1. THE CONTRACTOR SHALL USE CONSTRUCTION INFORMATION SIGNING AS SHOWN IN THE PLAN AND WHICH ARE TO BE USED AS FOLLOWS:

   G20-X1 CLOSURE NOTICE SIGNS PAIRED WITH G20-X3 WORK ENDS SIGNS TO DISPLAY THE CORRECT START DATE AND AN ESTIMATED FINISH DATE AS APPROVED BY THE PROJECT ENGINEER.

   G20-X2 WORK ZONE ADVANCE NOTICE SIGNS WITH THE CORRECT STARTING DATE DISPLAYED BEFORE WORK BEGINS. ONCE WORK BEGINS, THE START DATE LEGEND SHALL BE COVERED BY THE SUGGESTED PLAQUE CONTAINED IN THIS PLAN. IF NO ALTERNATE MESSAGE IS SUGGESTED OR IF DIRECTED BY THE PROJECT ENGINEER, THE CORRECT ESTIMATED FINISH DATE, MONTH, OR SEASON SHALL BE DISPLAYED.

   CONSTRUCTION INFORMATION SIGNING NOT VISIBLE TO THE MOTORING PUBLIC ONCE WORK BEGINS WILL BE MOVED BY THE CONTRACTOR TO A SITE IN ADVANCE OF THE WORK ZONE OR CLOSURE AS DIRECTED BY THE PLAN OR PROJECT ENGINEER.

TRAFFIC CONTROL DEVICES & SYMBOLS LEGEND

SYMBOL	DESCRIPTION
	AREA CLOSED TO TRAFFIC / WORK AREA
	TRAFFIC CONTROL SIGN
	TYPE III BARRICADE =
	DRUM-LIKE CHANNELIZER =
	TYPE A FLASHING WARNING LIGHT
	FLASHING ARROW BOARD TYPE C = (4' X 8' UNLESS OTHERWISE NOTED).
	SOLID LINE PAVEMENT MARKING WITH TEMPORARY RAISED PAVEMENT MARKERS AT 10' SPACES
	CONCRETE BARRIER WITH DELINEATORS AT 30' SPACES
	IMPACT ATTENUATOR
	CHANNELIZER SYMBOL =
	PORTABLE CHANGEABLE MESSAGE SIGN (PCMS) = PCMS

STRIPING KEY

TRIANGLE - PAINT

PENTAGON - REMOVEABLE PREFORMED PLASTIC MARKING

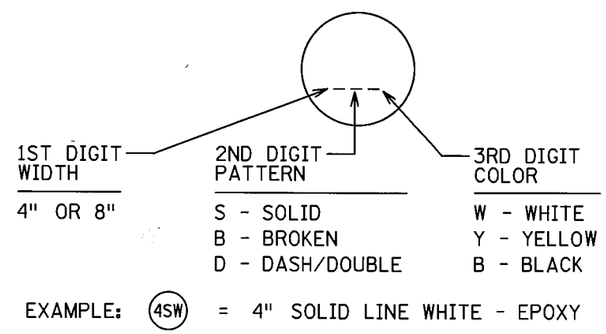

INDEX

TRAFFIC CONTROL SHEET NO.	DESCRIPTIONS
TC1	TITLE SHEET
TC2	PAY ITEM TABULATION SHEET
TC3	TRAFFIC CONTROL TABULATION SHEET
TC4-TC5	ADVANCED SIGNING
TC6-TC8	DETOURS
TC9-TC12	BUSINESS SIGNING
TC13-TC21	TRAFFIC CONTROL STAGE 1
TC22-TC30	TRAFFIC CONTROL STAGE 1A
TC31-TC37	TRAFFIC CONTROL STAGE 1B
TC38-TC44	TRAFFIC CONTROL STAGE 2
TC45-TC51	TRAFFIC CONTROL STAGE 3
TC52-TC61	TRAFFIC CONTROL STAGE 4
TC62-TC64	TRAFFIC CONTROL STAGE 4A
TC65-TC74	TRAFFIC CONTROL STAGE 5
TC75-TC80	TRAFFIC CONTROL STAGE 5A
TC81-TC82	SPECIAL SIGNS
TC83-TC84	TYPICALS

I HEREBY CERTIFY THAT SHEETS TC1 THROUGH TC84 OF THIS PLAN WERE PREPARED BY ME OR UNDER MY DIRECT SUPERVISION AND THAT I AM A DULY LICENSED PROFESSIONAL ENGINEER UNDER THE LAWS OF THE STATE OF MINNESOTA

TIFFANY DAGON

DATE 6/14/2012 LIC. NO. 40535

DESIGNER SCOTT MEIER

TITLE:

TRAFFIC CONTROL
TITLE SHEET
SP 179-020-031 SP 019-605-028

STATE PROJ. NO. 1901-148 (TH 13)

TRAFFIC CONTROL TABULATION — TC

INTERCHANGE QUANTITIES — TC

	PAY ITEM	UNIT	STAGE 1	STAGE 1A	STAGE 1B	STAGE 2	STAGE 3	STAGE 4	STAGE 4A	STAGE 5	STAGE 5A	TOTAL
	PAVEMENT MARKING REMOVAL-PERMANENT	LIN FT	602			1835	779	2520				5736
	PAVEMENT MARKING REMOVAL-PERMANENT	SQ FT	48					198				246
	PORTABLE PRECAST CONC BARRIER DES 8337	LIN FT		470		1791	2541			2913		7715
	RELOCATE PORTABLE PRECAST CONC BARRIER DESIGN 8337	LIN FT			470	470	227	2150		2150		5467
	IMPACT ATTENUATOR	AMBY		4			1					5
	RELOCATE IMPACT ATTENUATOR	AMBY			4	2	2	2				10
(1)	MEDIAN BARRIER DELINEATOR	EACH		16		226	92	72		108		514
	4" DOUBLE SOLID LINE YELLOW-PAINT	LIN FT	596			700		5540	1785	4850		13471
	4" SOLID LINE WHITE-PAINT	LIN FT	892			1105	1644	8270	2657	6512		21080
	8" SOLID LINE WHITE-PAINT	LIN FT				19	73		179	282		553
	4" BROKEN LINE WHITE-PAINT	LIN FT				350	380					730
	4" BROKEN LINE YELLOW-PAINT	LIN FT				1680						1680
	4" SOLID LINE YELLOW-PAINT	LIN FT					2075	2566	1125	2671		8437
	8" DOTTED LINE YELLOW-PAINT	LIN FT						153				153
(3)	REMOVABLE PREFORMED PLASTIC MARKING	LIN FT		5535	2720			587	331	2609		11782
(2)	RAISED PAVEMENT MARKER TEMPORARY	EACH		406	297			300	179	224		1406
	TEMPORARY GLARE SCREEN	LIN FT					1342					1342
	PORTABLE CHANGEABLE MESSAGE SIGN	UNIT DAY		20	20							40
	REMOVABLE PREFORMED PLASTIC MASK (BLACK)	LIN FT		120	270	60	60	160		150		820

TRAFFIC CONTROL TABULATION — TC

SP179-020-031 QUANTITIES — TC

PAY ITEM	UNIT	STAGE 1	STAGE 2	STAGE 3	STAGE 4	STAGE 4A	STAGE 5	STAGE 5A	TOTAL
PAVEMENT MARKING REMOVAL-PERMANENT	LIN FT	273							273
PAVEMENT MARKING REMOVAL-PERMANENT	SQ FT	336							336
INTERIM PAVEMENT MARKING	LUMP SUM	0.5	0.5						1
4" DOUBLE SOLID LINE YELLOW-PAINT	LIN FT	891	481						1372
4" SOLID LINE WHITE-PAINT	LIN FT	152							152

TRAFFIC CONTROL TABULATION — TC

100% STATE QUANTITIES — TC

	PAY ITEM	UNIT	STAGE 1	STAGE 2	STAGE 3	STAGE 4	STAGE 4A	STAGE 5	STAGE 5A	TOTAL
	PAVEMENT MARKING REMOVAL-PERMANENT	LIN FT							946	946
	PORTABLE PRECAST CONC BARRIER DES 8337	LIN FT							2480	2480
	4" DOUBLE SOLID LINE YELLOW-PAINT	LIN FT							3034	3034
	4" SOLID LINE WHITE-PAINT	LIN FT							3896	3896
	4" BROKEN LINE YELLOW-PAINT	LIN FT							2478	2478
(2)	RAISED PAVEMENT MARKER TEMPORARY	EACH							332	332
	REMOVABLE PREFORMED PLASTIC MASK (BLACK)	LIN FT							270	270

NOTE: (1) 133 ONE WAY WHITE, 273 TWO WAY YELLOW
(2) 555 ONE WAY WHITE, 410 ONE WAY YELLOW
(3) 6466' WHITE, 5316' YELLOW

SP 179-020-031 SP 019-605-028

PAY ITEM TABULATION CHART

DRAWN BY: SNM | CHECKED BY: KF | CERTIFIED BY Tiffany J. Dagn LICENSED PROFESSIONAL ENGINEER | LIC. NO. 40535 | DATE 7/26/2012

STATE PROJ. NO. 1901-148 (TH 13) SHEET NO. TC2 OF TC84 SHEETS

PLOTTED/REVISED: 7/26/2012
DISTRICT #: METRO
IPLOT NAME: t_typicals_tc_tsh
PATH & FILENAME: IP_PWP:dl44345N_typicals_tc_tshdgn

TRAFFIC CONTROL TABULATION SHEET

"M" SERIES

5 COUNTY / 34 COUNTY	M1-X4	BLACK ON WHITE	24" X 24"
DETOUR	M4-8	BLACK ON ORANGE	24" X 12"
NORTH	M3-1m	BLACK ON WHITE	24" X 12"
SOUTH	M3-3m	BLACK ON WHITE	24" X 12"
	M6-1	BLACK ON WHITE	21" X 15"
	M5-1	BLACK ON WHITE	21" X 15"
	M6-3	BLACK ON WHITE	21" X 15"
MINNESOTA 13	M1-5a	WHITE AND GOLD ON BLUE	24" X 24"
INTERSTATE 35W	M1-1	WHITE ON RED AND BLUE	36" X 36"
TO	M4-5a	WHITE ON BLUE	24" X 12"
	M5-1Ra	WHITE ON BLUE	30" X 24"
	M6-1Ra	WHITE ON BLUE	30" X 24"
DETOUR / DETOUR	M4-9m	BLACK ON ORANGE	30" X 24"
DETOUR / DETOUR	M4-9m	BLACK ON ORANGE	30" X 24"
SOUTH	M3-3Ma	WHITE ON BLUE	24" X 12"
DETOUR / DETOUR	M4-9	BLACK ON ORANGE	30" X 24"
DETOUR / DETOUR	M4-10	BLACK ON ORANGE	48" X 18"
	M6-2	BLACK ON WHITE	21" X 15"
END DETOUR	M4-8A	BLACK ON ORANGE	24" X 18"

"R" SERIES

SIGN	SIGN NO.	COLOR	SIZE
	R4-7	BLACK ON WHITE	24" X 30"
SPEED LIMIT	R2-1	BLACK ON WHITE	26" X 30"
LEFT LANE MUST TURN LEFT	R3-7L	BLACK ON WHITE	30" X 30"
RIGHT LANE MUST TURN RIGHT	R3-7R	BLACK ON WHITE	30" X 30"
DO NOT ENTER	R5-1	RED ON WHITE	30" X 30"
RAMP CLOSED / ROAD CLOSED	R11-2	BLACK ON WHITE	48" X 30"
STOP	R1-1	WHITE ON RED	30" X 30"
ALL WAY	R1-4	WHITE ON RED	12" X 6"
DO NOT PASS	R4-1	BLACK ON WHITE	24" X 30"
	R3-2	BLACK AND RED ON WHITE	24" X 24"
	R3-1	BLACK AND RED ON WHITE	24" X 24"
SIDEWALK CLOSED	R9-9	BLACK ON WHITE	30" X 18"
SIDEWALK CLOSED / SIDEWALK CLOSED	R9-11	BLACK ON WHITE	48" X 18"
ONLY / ONLY	R3-30AA	BLACK ON WHITE	36" X 30"
ROAD CLOSED MILES AHEAD LOCAL TRAFFIC ONLY	R11-3A	BLACK ON WHITE	60" X 30"
NO TURNS	R3-3	BLACK ON WHITE	24" X 24"
ONLY / ONLY	R3-30CA	BLACK ON WHITE	36" X 30"

"W" SERIES

SIGN	SIGN NO.	COLOR	SIZE
ROAD WORK AHEAD	W20-1	BLACK ON ORANGE	48" x 48"
NO SHOULDER	W21-X1	BLACK ON ORANGE	48" x 48"
RIGHT LANE CLOSED	W21-X5R	BLACK ON ORANGE	48" X 48"
	W4-2	BLACK ON ORANGE	48" X 48"
	W1-4	BLACK ON ORANGE	48" X 48"
	W1-6	BLACK ON ORANGE	48" X 48"
DETOUR AHEAD	W20-2	BLACK ON ORANGE	48" X 48"
ROAD CLOSED AHEAD	W20-3	BLACK ON ORANGE	48" X 48"
TRAFFIC CONTROL CHANGE AHEAD	W3-X5	BLACK ON	48" X 48"
	W3-1	BLACK RED, WHITE ON YELLOW	48" X 48"
RIGHT LANE CLOSED / LEFT LANE CLOSED	W21-X5	BLACK ON ORANGE	48" X 48"
	W11-2	BLACK ON ORANGE	48" X 48"
	W16-7	BLACK ON ORANGE	36" X 24"
	W1-X1	BLACK ON ORANGE	48" X 48"
	W1-4b	BLACK ON ORANGE	48" X 48"
FEET	W20-100	BLACK ON WHITE	42" X 24"

"R" SERIES

SIGN	SIGN NO.	COLOR	SIZE
	W12-1	BLACK ON ORANGE	48" X 48"
TURN LANE CLOSED	W20-X18	BLACK ON ORANGE	48" X 48"

"G" SERIES

SIGN	SIGN NO.	COLOR	SIZE
ROAD CLOSED BEGINNING MONTH DY	G20-X1	BLACK ON ORANGE	54" X 48"
END ROAD WORK	G20-2A	BLACK ON ORANGE	48" X 24"
EXIT	G20-X7	BLACK ON ORANGE	48" X 48"
USE BOTH LANES DURING BACKUPS	G20-X10	BLACK ON ORANGE	48" X 60"
TAKE TURNS AT MERGE	G20-X11	BLACK ON ORANGE	78" X 36"
BEGIN MERGE	G20-X13	BLACK ON ORANGE	42" X 24"

"W" SERIES

SIGN	SIGN NO.	COLOR	SIZE
NO PASSING ZONE	W14-3	BLACK ON ORANGE	48"X60"X60"
	W6-2	BLACK ON ORANGE	48" X 48"
	W6-3	BLACK ON ORANGE	48" X 48"
RAMP CLOSED AHEAD	W20-X16	BLACK ON ORANGE	48" X 48"

SP 179-020-031 SP 019-605-028

TRAFFIC CONTROL TABULATION CHART

STATE PROJ. NO. 1901-148 (TH 13) SHEET NO. TC3 OF TC84 SHEETS

DRAWN BY: SNM | CHECKED BY: KF | CERTIFIED BY _____ LICENSED PROFESSIONAL ENGINEER LIC. NO. 40535 DATE 6/14/2012

PLOTTED/REVISED: 6/14/2012
DISTRICT #: METRO
IPLOT NAME: t_typicals_tc_tsh2
PATH & FILENAME: IP_PWPdl443451\t_typicals_tc_tshdgn

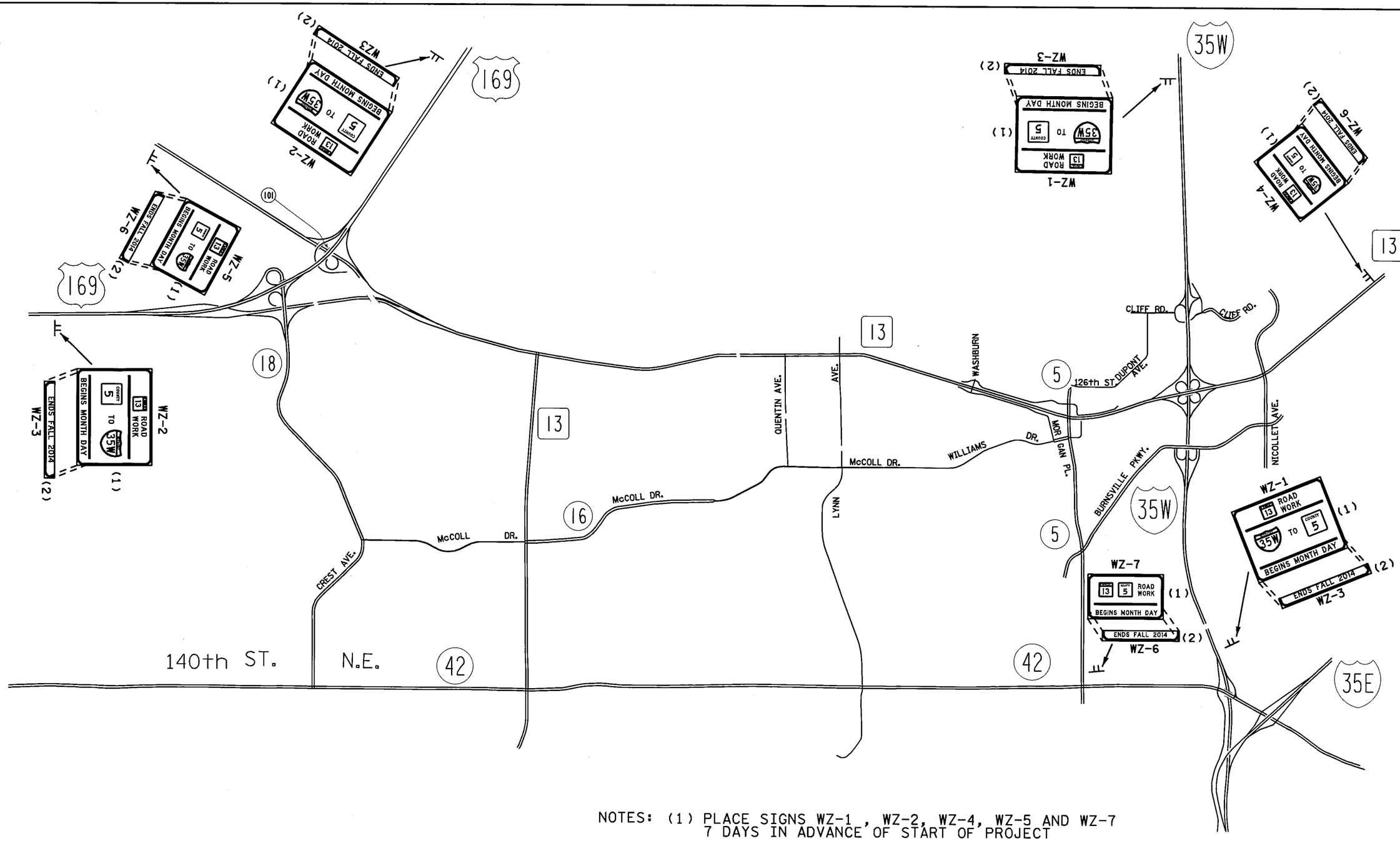

NOTES: (1) PLACE SIGNS WZ-1 , WZ-2, WZ-4, WZ-5 AND WZ-7
7 DAYS IN ADVANCE OF START OF PROJECT
(2) PLACE SIGNS WZ-3 AND WZ-6 PANELS UPON START OF PROJECT

STAGE 1 TRAFFIC CONTROL
SP 179-020-031 SP 019-605-028

ADVANCED SIGNING

DRAWN BY: SNM	CHECKED BY: KF	CERTIFIED BY _____ LICENSED PROFESSIONAL ENGINEER	LIC. NO. 40535	DATE 6/14/2012

STATE PROJ. NO. 1901-148 (TH 13) SHEET NO. TC4 OF TC84 SHEETS

PLOTTED/REVISED: 6/14/2012
DISTRICT *: METRO
IPLOT NAME: t1901-148_Advanced Signing
PATH & FILENAME: IP_PWPdl443345\t1901-148_Advanced Signing.dgn

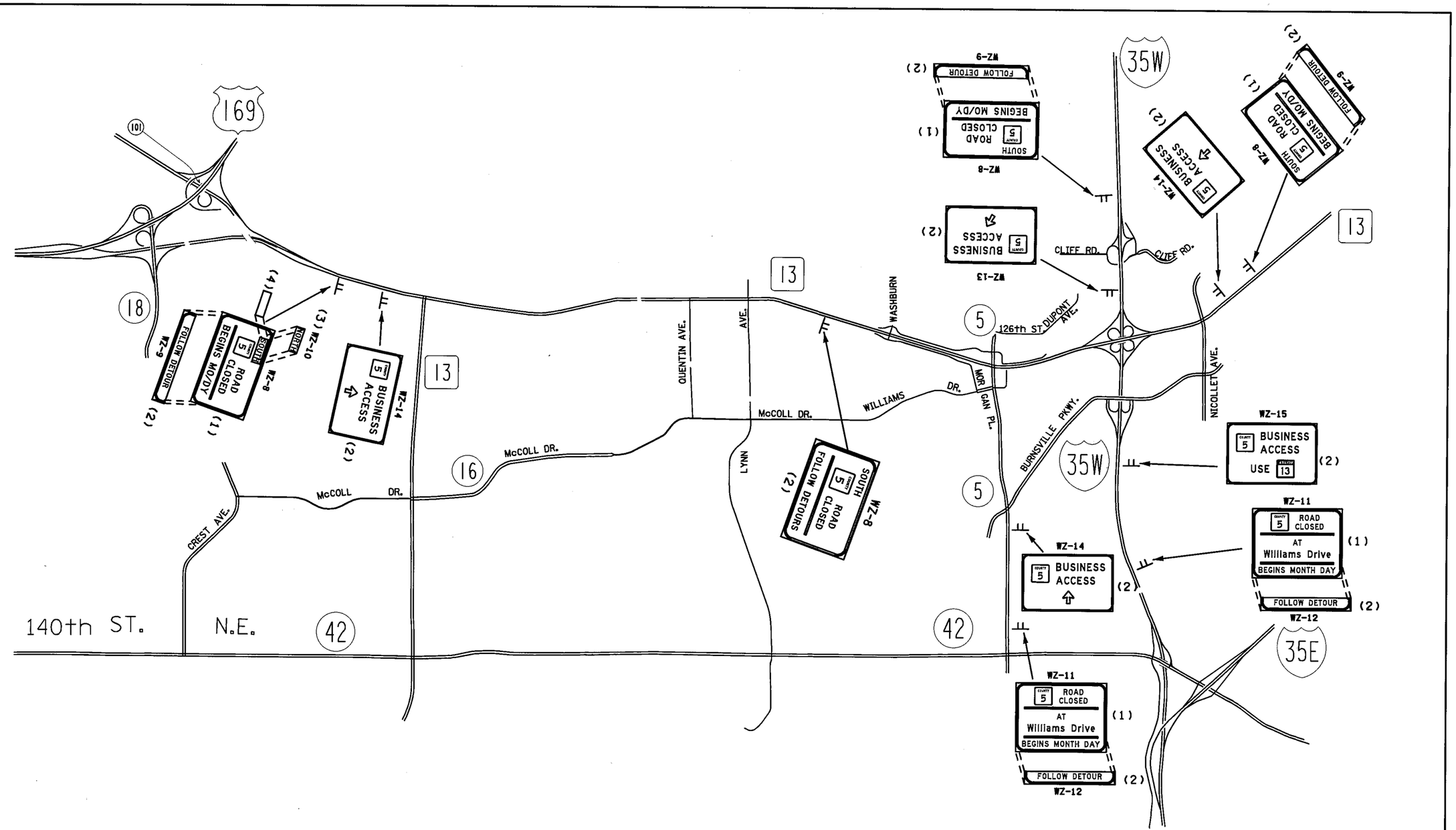

NOTES:
(1) PLACE SIGNS WZ-8 AND WZ-11 SIGNS 7 DAYS IN ADVANCE OF CLOSURE
(2) PLACE SIGNS WZ-9, WZ-12, WZ-13, WZ-14, WZ-8 AND WZ-15 SIGNS UPON START OF CLOSURE
(3) PLACE WZ-10 PANEL FOR STAGE 3
(4) PLACE BLANK PANEL WZ-10 FOR STAGE 4

SP 179-020-031 SP 019-605-028

ADVANCED SIGNING

DRAWN BY: SNM	CHECKED BY: KF	CERTIFIED BY _____ LICENSED PROFESSIONAL ENGINEER	LIC. NO. 40535	DATE 6/14/2012	STATE PROJ. NO. 1901-148 (TH 13) SHEET NO. TC5 OF TC84 SHEETS

PLOTTED/REVISED: 6/14/2012

DISTRICT #: METRO
IPLOT NAME: t1901-148_Advanced Signing!
PATH & FILENAME: IP_PWP:d1443345\t1901-148_Advanced Signing.dgn

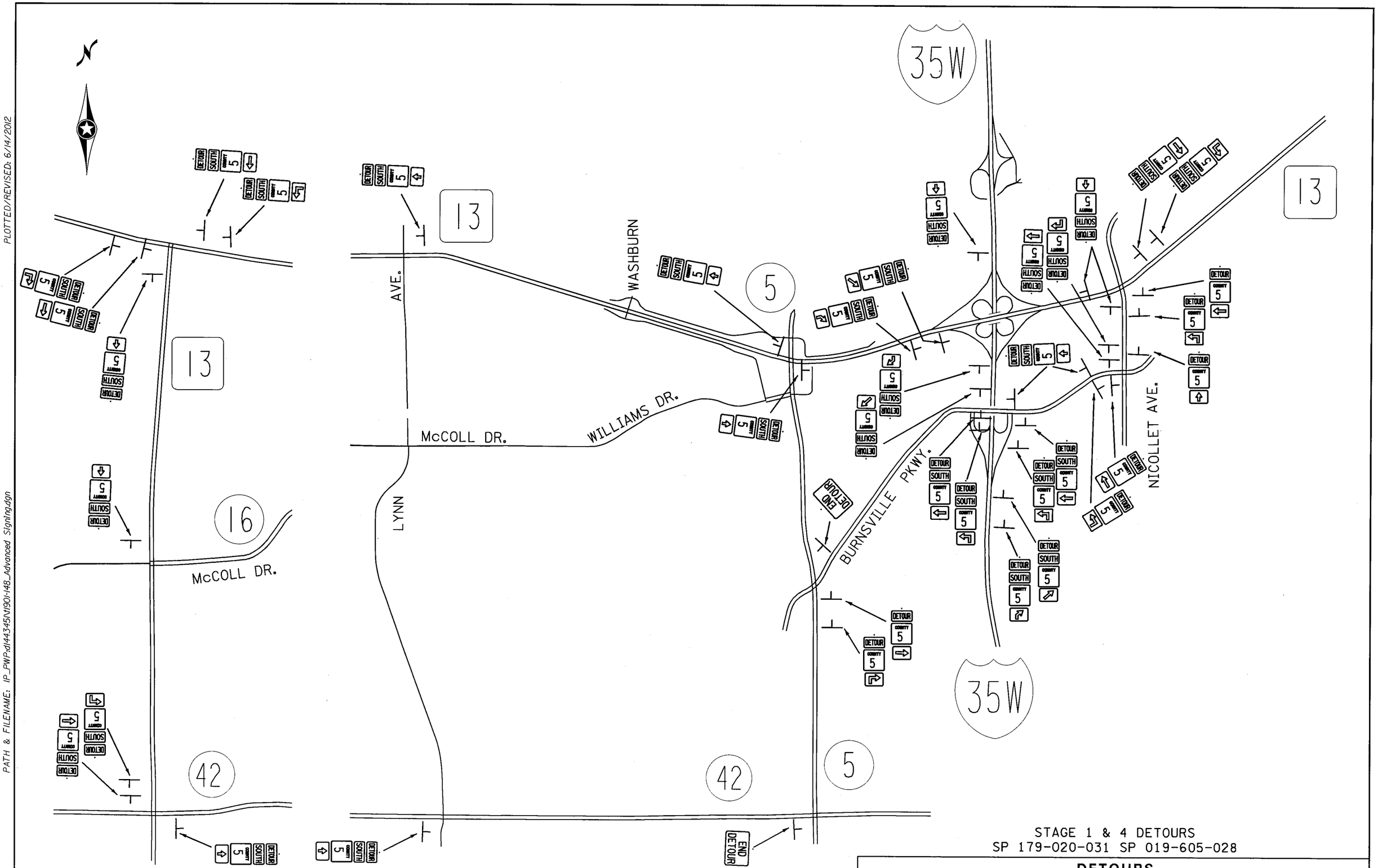

STAGE 1 & 4 DETOURS
SP 179-020-031 SP 019-605-028

DETOURS

DRAWN BY: SNM	CHECKED BY: KF	CERTIFIED BY _____ LICENSED PROFESSIONAL ENGINEER	LIC. NO. 40535	DATE 6/14/2012

STATE PROJ. NO. 1901-148 (TH 13) SHEET NO. TC6 OF TC84 SHEETS

PLOTTED/REVISED: 6/14/2012

DISTRICT #: METRO
IPLOT NAME: 1190I-148_Stage 1 & 4 detour
PATH & FILENAME: IP_PWP:dl44345\1190I-148_Advanced Signing.dgn

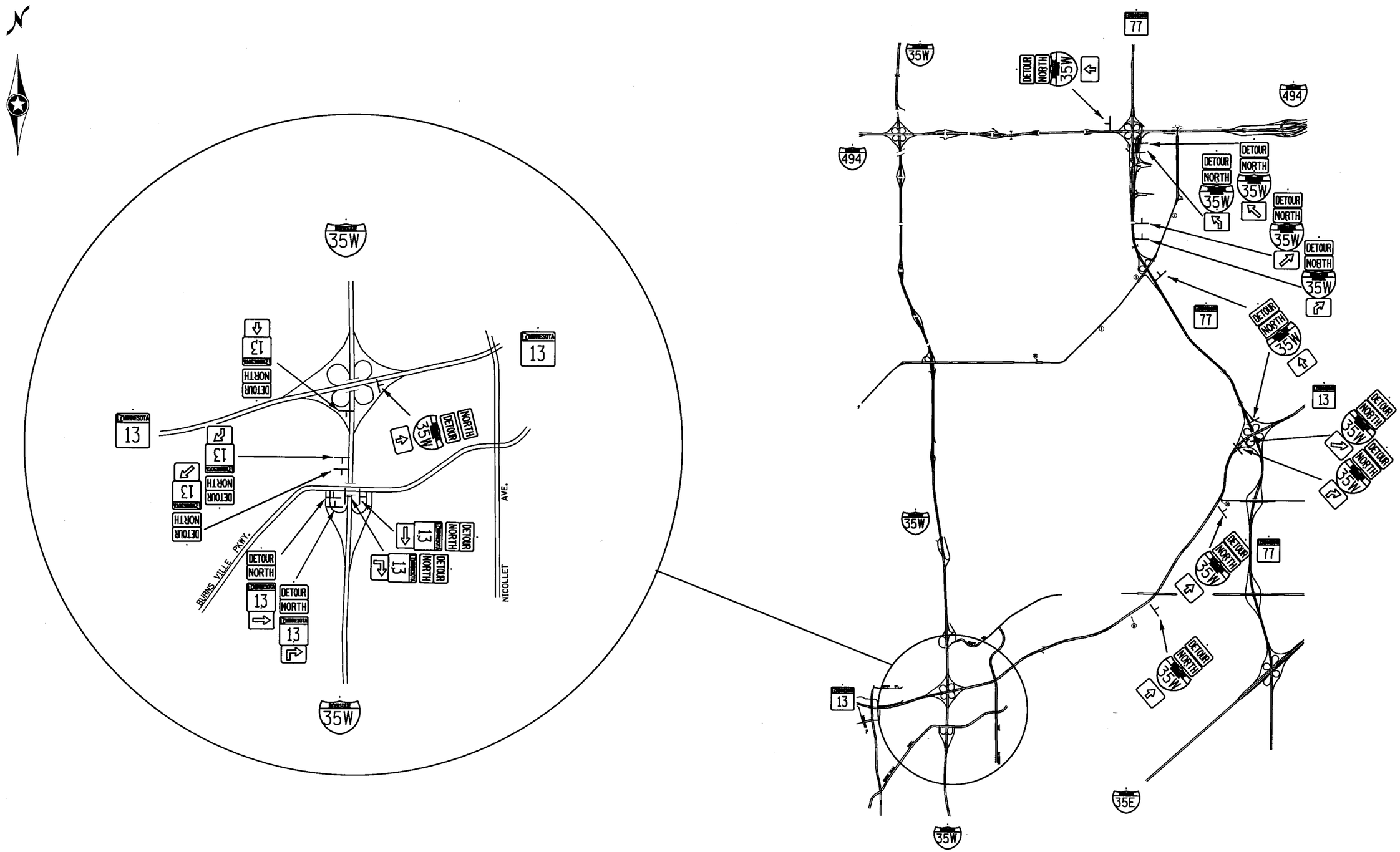

STAGE 4A
SP 179-020-031 SP 019-605-028

DETOURS

DRAWN BY: SNM	CHECKED BY: KF	CERTIFIED BY _____ LICENSED PROFESSIONAL ENGINEER	LIC. NO. 40535	DATE 6/14/2012	STATE PROJ. NO. 1901-148 (TH 13) SHEET NO. TC7 OF TC84 SHEETS

PLOTTED/REVISED: 6/14/2012

DISTRICT #: METRO
IPLOT NAME: t1901-148_Stage 4A detour
PATH & FILENAME: IP_PWP:di44345\t1901-148_Advanced Signing.dgn

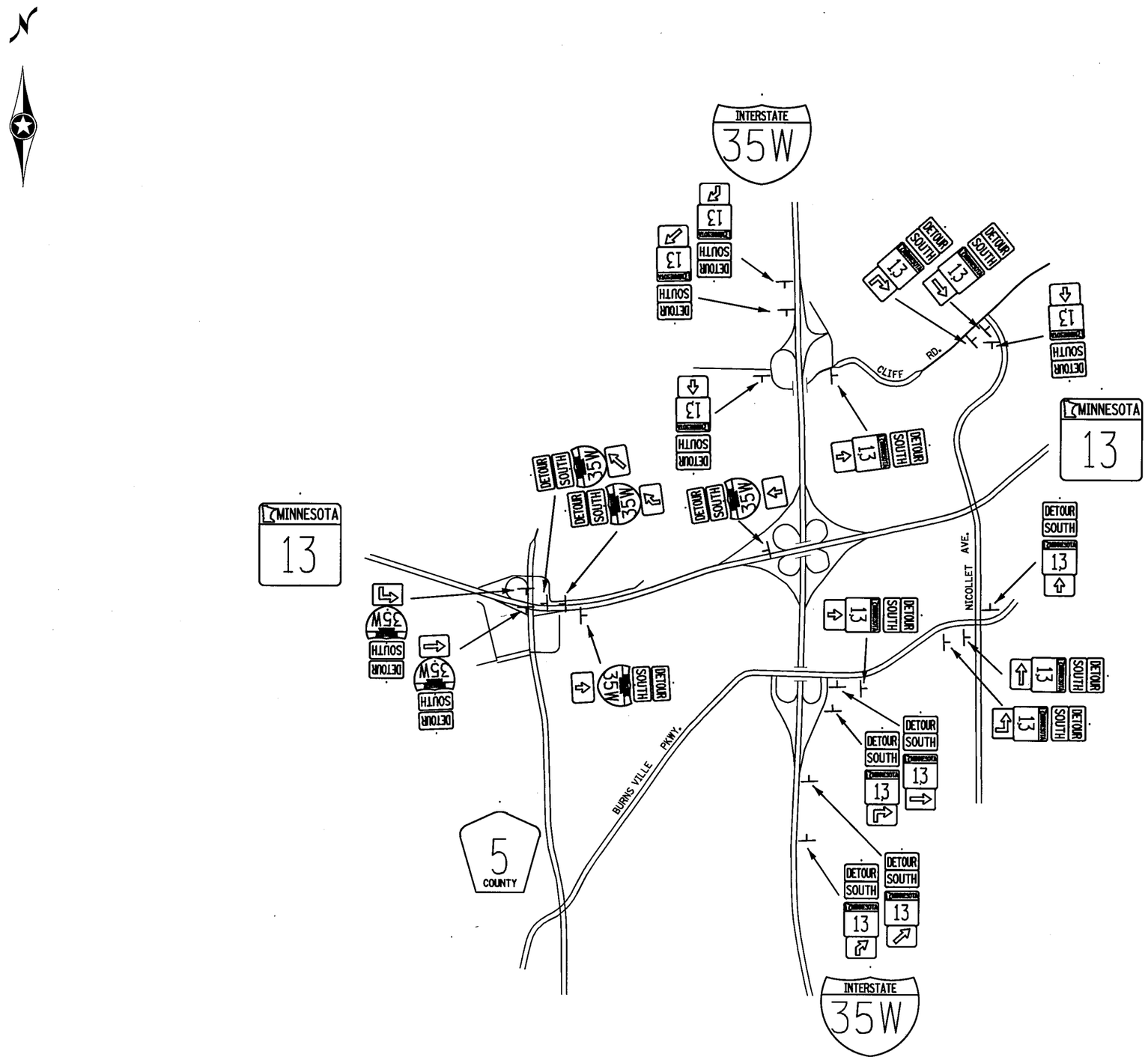

STAGE 5A
SP 179-020-031 SP 019-605-028

DETOURS

DRAWN BY: SNM	CHECKED BY: KF	CERTIFIED BY _____ LICENSED PROFESSIONAL ENGINEER	LIC. NO. 40535	DATE 6/14/2012	STATE PROJ. NO. 1901-148 (TH 13)	SHEET NO. TC8	OF TC84 SHEETS

PLOTTED/REVISED: 6/14/2012

DISTRICT #: METRO
IPLOT NAME: 1190I-148_Stgae 5A detour
PATH & FILENAME: IP_PWP-dl443345\1190I-148_Advanced Signing.dgn

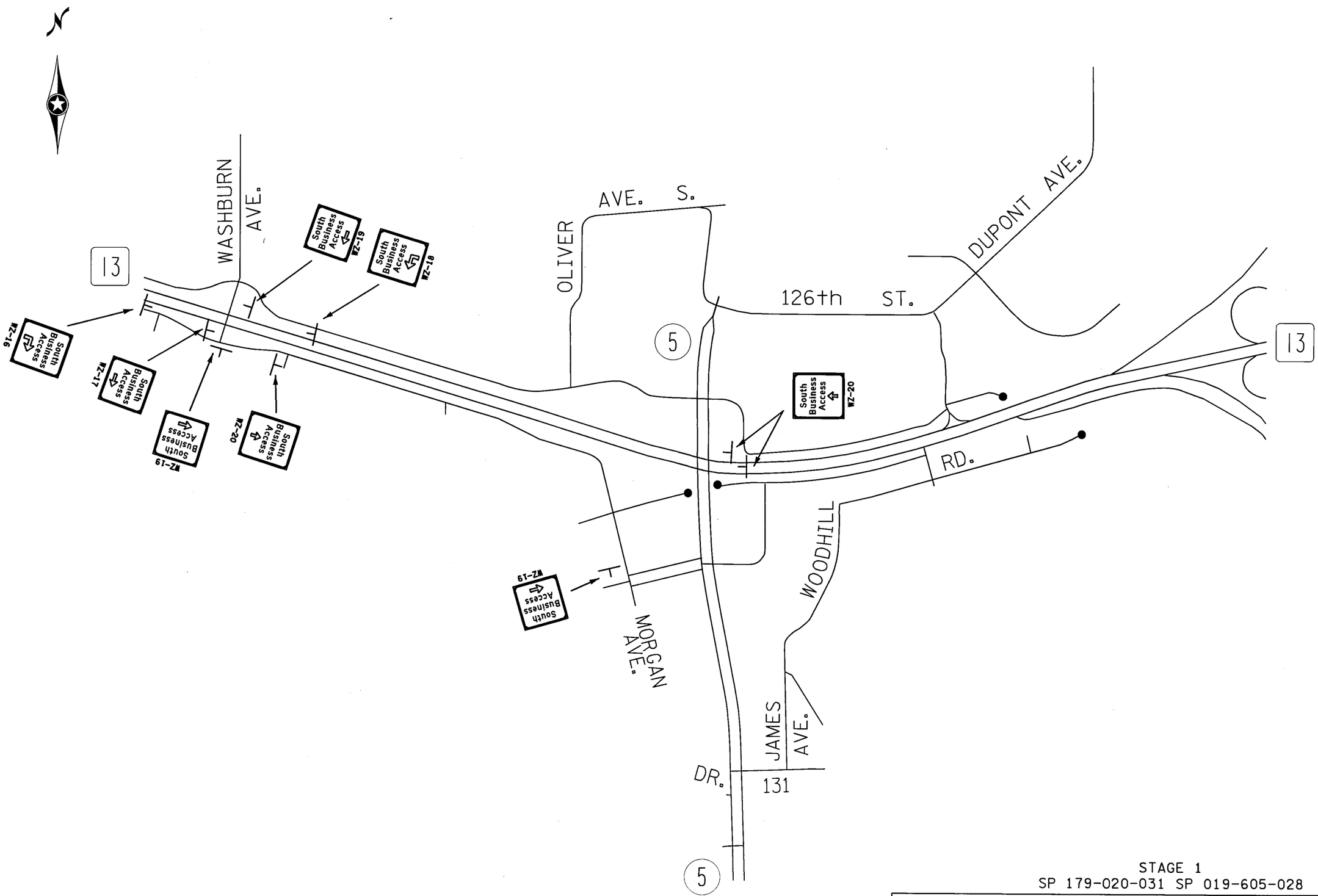

STAGE 1
SP 179-020-031 SP 019-605-028

BUSINESS SIGNING

DRAWN BY: SNM	CHECKED BY: KF	CERTIFIED BY [signature] LICENSED PROFESSIONAL ENGINEER	LIC. NO. 40535	DATE 6/14/2012	STATE PROJ. NO. 1901-148 (TH 13)	SHEET NO. TC9	OF TC84 SHEETS

PLOTTED/REVISED: 6/14/2012

DISTRICT #: METRO
IPLOT NAME: t1901-148_Stg 1 Business
PATH & FILENAME: IP_PWP:d144345\t1901-148_Advanced Signing.dgn

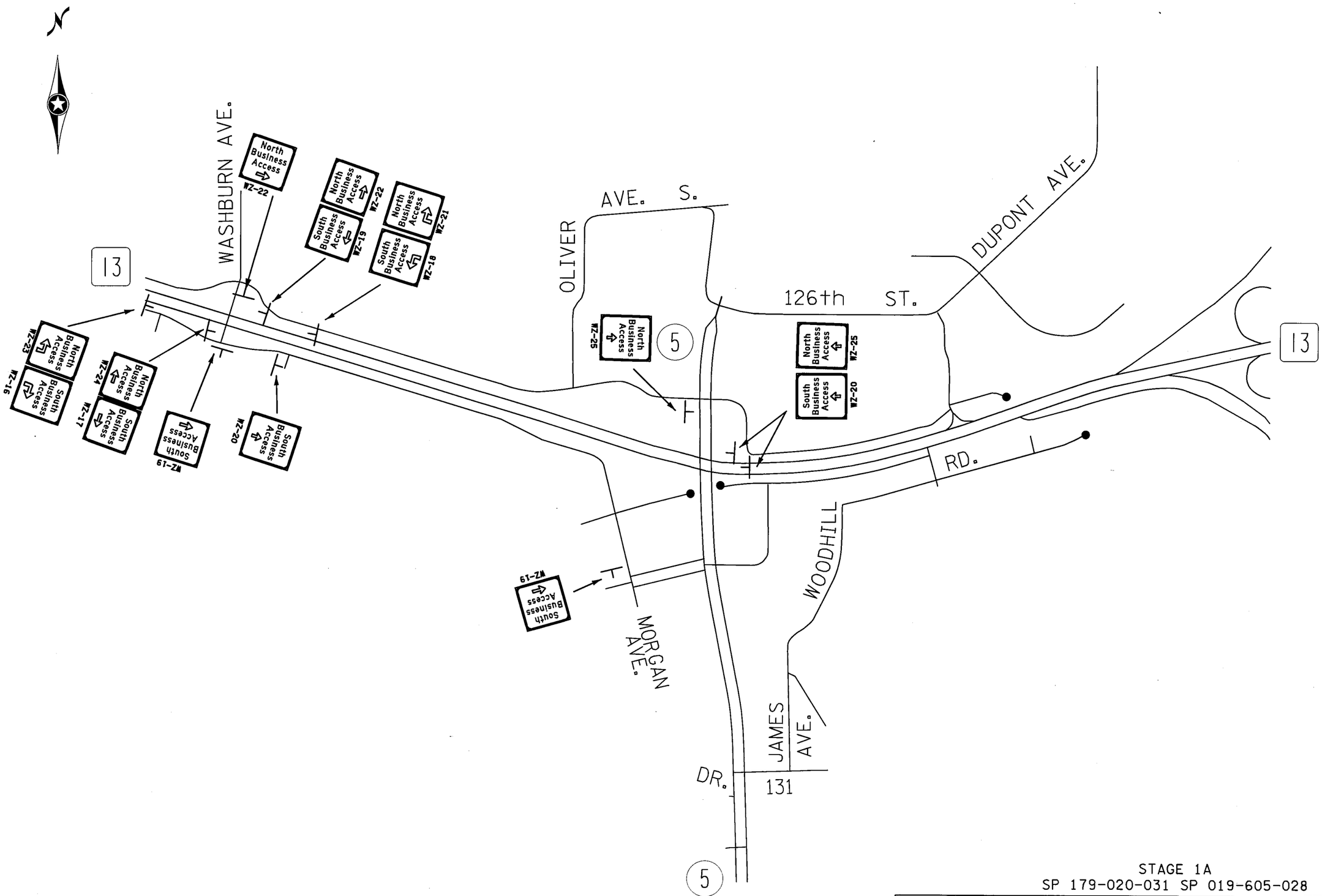

STAGE 1A
SP 179-020-031 SP 019-605-028

BUSINESS SIGNING

DRAWN BY: SNM	CHECKED BY: KF	CERTIFIED BY _____ LICENSED PROFESSIONAL ENGINEER	LIC. NO. 40535	DATE 6/14/2012	STATE PROJ. NO. 1901-148 (TH 13) SHEET NO. TC10 OF TC84 SHEETS

DISTRICT #: METRO
IPLOT NAME: 1190I-148_Stg IA Business
PATH & FILENAME: IP_PWP:d/443450/1901-148_Advanced Signing.dgn
PLOTTED/REVISED: 6/14/2012

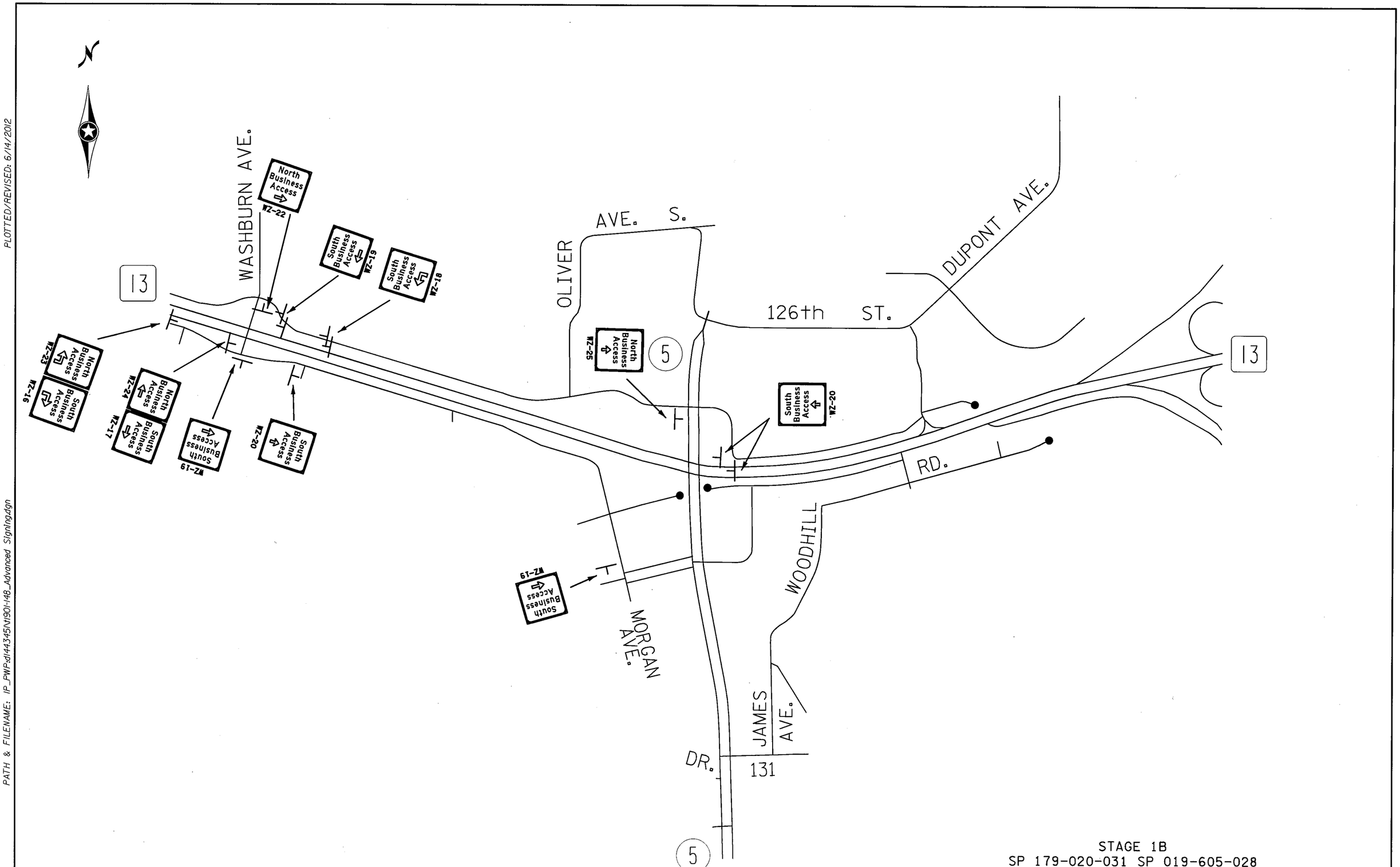

STAGE 1B
SP 179-020-031 SP 019-605-028

BUSINESS SIGNING

DRAWN BY: SNM	CHECKED BY: KF	CERTIFIED BY _____ LICENSED PROFESSIONAL ENGINEER	LIC. NO. 40535	DATE 6/14/2012	STATE PROJ. NO. 1901-148 (TH 13)	SHEET NO. TC11	OF TC84 SHEETS

PLOTTED/REVISED: 6/14/2012

DISTRICT #: METRO
IPLOT NAME: 1901-148_Stg 1B Business
PATH & FILENAME: IP_PWP:dl44345\t1901-148_Advanced Signing.dgn

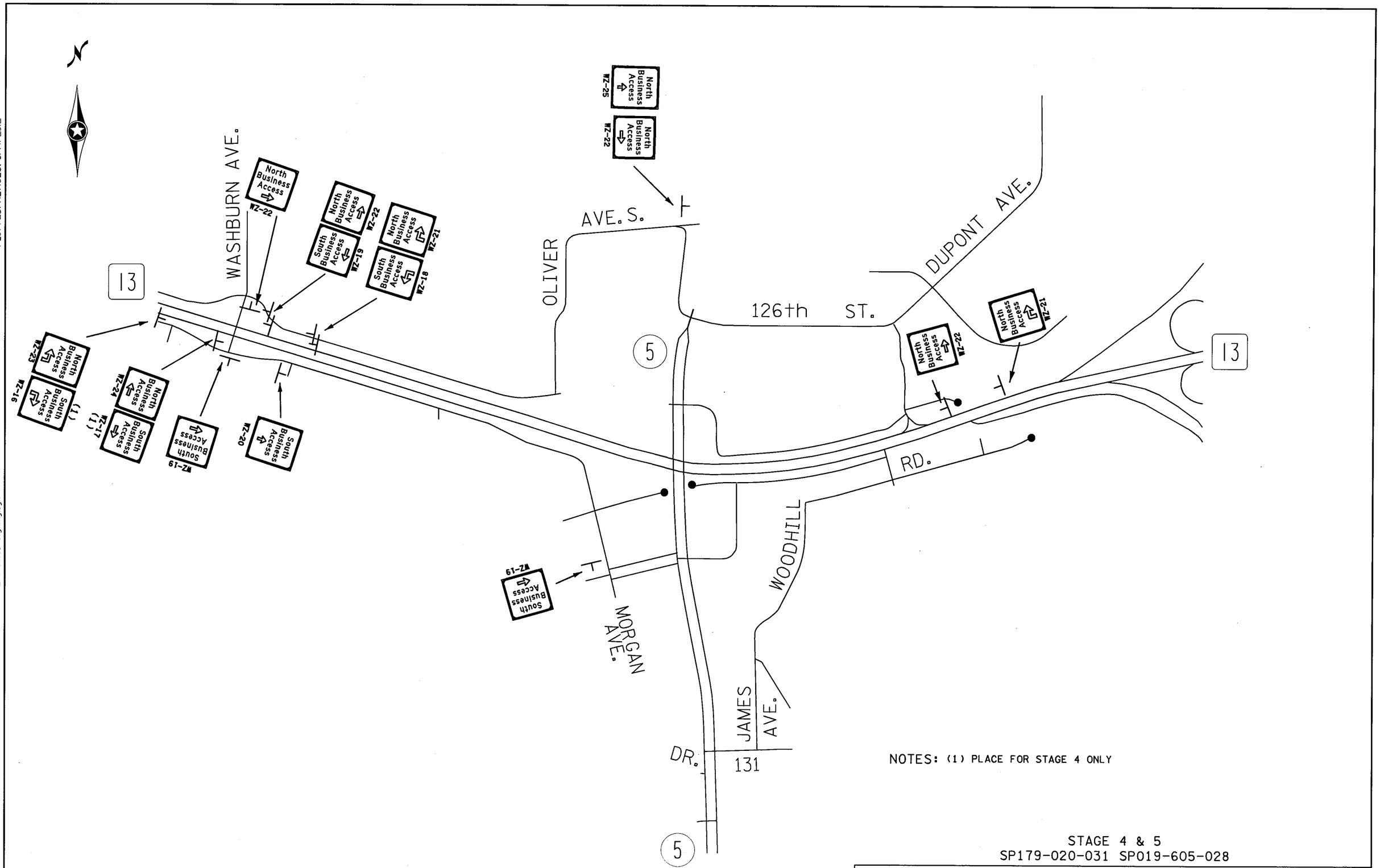

NOTES: (1) PLACE FOR STAGE 4 ONLY

STAGE 4 & 5
SP179-020-031 SP019-605-028

BUSINESS SIGNING

DRAWN BY: SNM	CHECKED BY: KF	CERTIFIED BY _____ LICENSED PROFESSIONAL ENGINEER	LIC. NO. 40535	DATE 6/14/2012	STATE PROJ. NO. 1901-148 (TH 13)	SHEET NO. TC12	OF TC84 SHEETS

DISTRICT #: METRO
IPLOT NAME: 1901-148_Stg 4 & 5 Business
PATH & FILENAME: IP_PWP:d/44345/N/1901-148_Advanced Signing.dgn
PLOTTED/REVISED: 6/14/2012

PLOTTED/REVISED: 6/14/2012

DISTRICT #: METRO
IPLOT NAME: 1190I-148tc-stgII
PATH & FILENAME: IP_PWP:dl443345\N190I-148tc-stgI.dgn

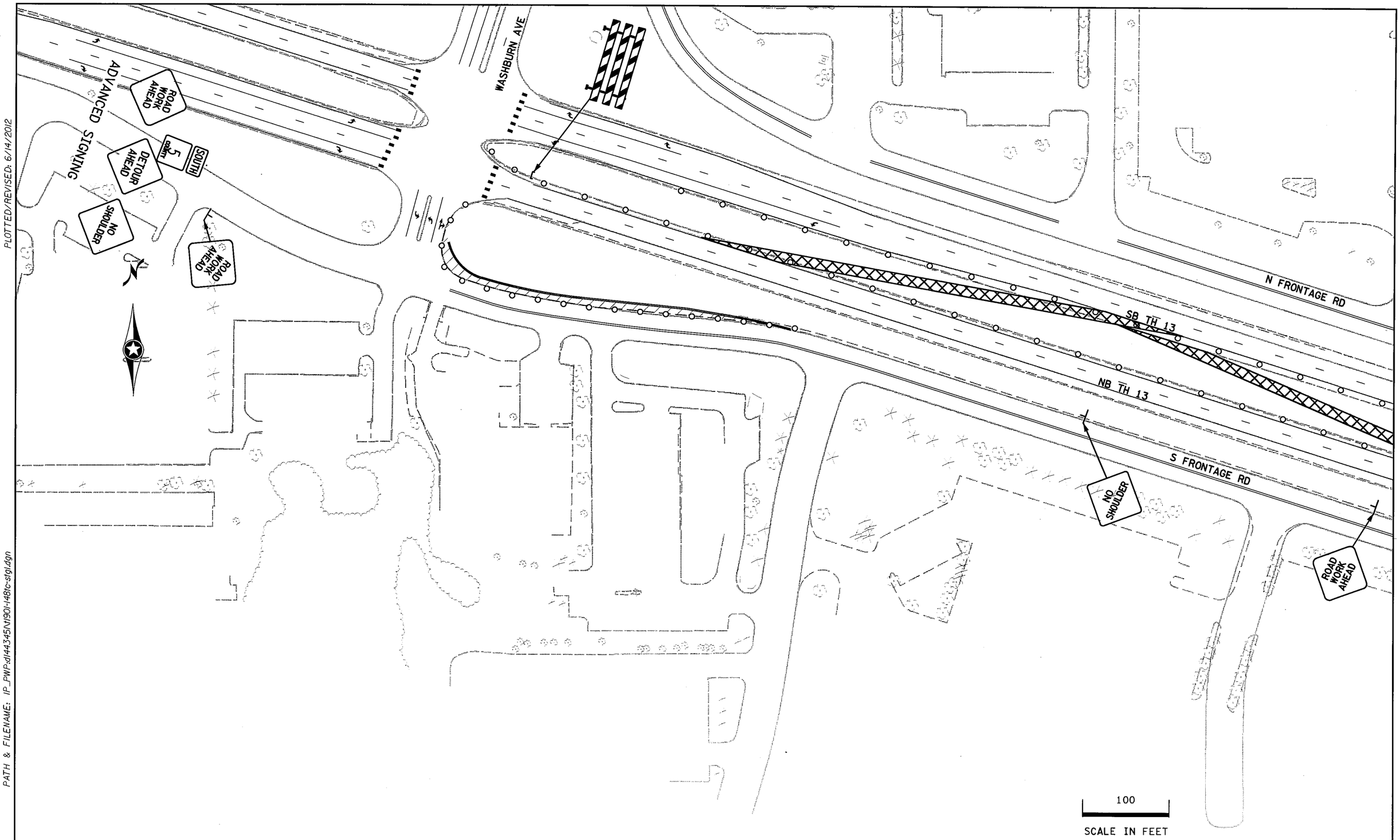

SP 179-020-031 SP 019-605-028

STAGE 1

DRAWN BY: SNM	CHECKED BY: KF	CERTIFIED BY _____ LICENSED PROFESSIONAL ENGINEER	LIC. NO. 40535	DATE 6/14/2012	STATE PROJ. NO. 1901-148 (TH 13)	SHEET NO. TC13	OF TC84 SHEETS

PLOTTED/REVISED: 6/14/2012

DISTRICT #: METRO
IPLOT NAME: 1i901-148tc-stg12
PATH & FILENAME: IP_PWP:dl443345\N1901-148tc-stg1.dgn

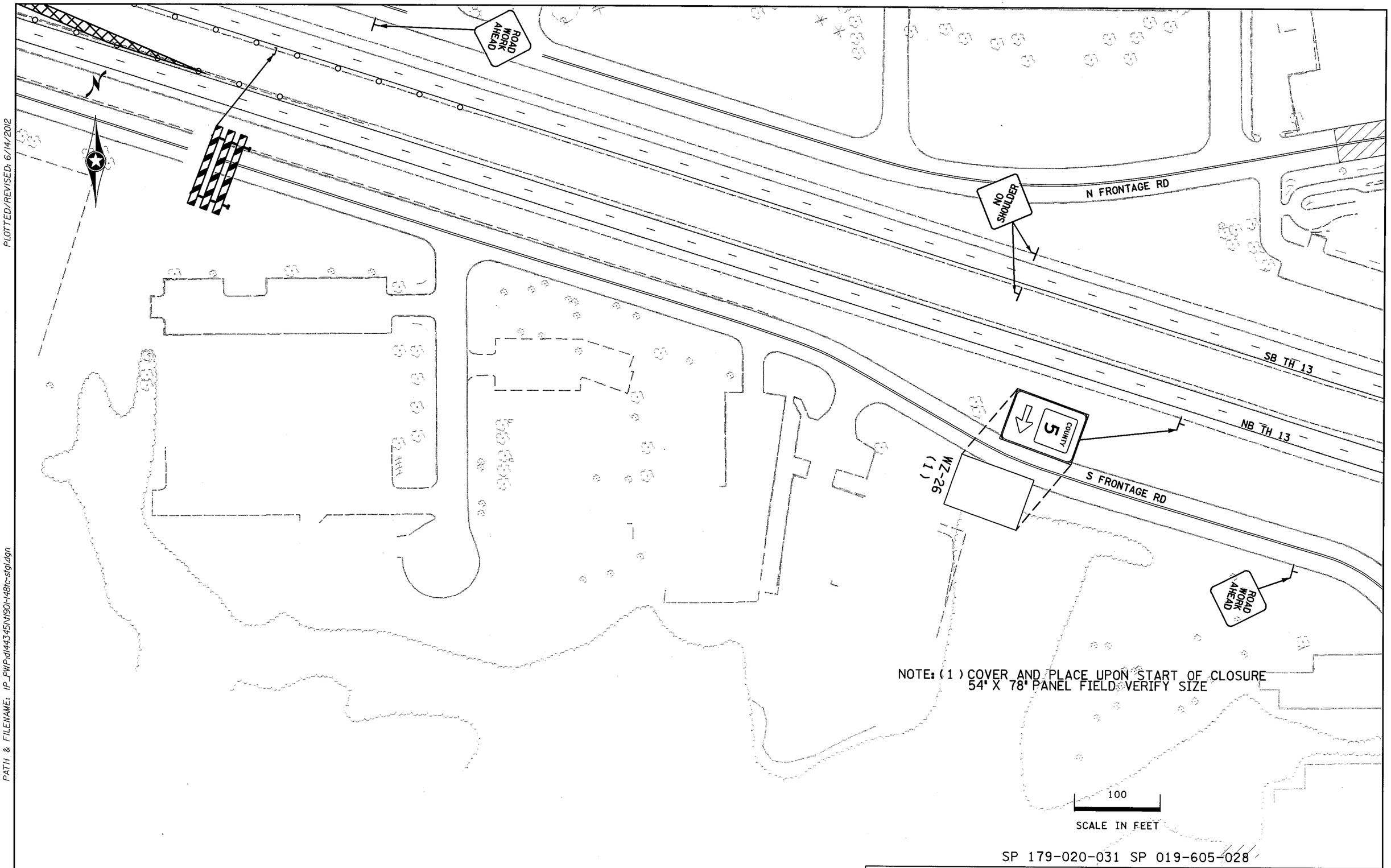

NOTE: (1) COVER AND PLACE UPON START OF CLOSURE
54" X 78" PANEL FIELD VERIFY SIZE

SP 179-020-031 SP 019-605-028

DRAWN BY: SNM	CHECKED BY: KF	CERTIFIED BY _____ LICENSED PROFESSIONAL ENGINEER	LIC. NO. 40535	DATE 6/14/2012	STAGE 1 STATE PROJ. NO. 1901-148 (TH 13) SHEET NO. TC14 OF TC84 SHEETS

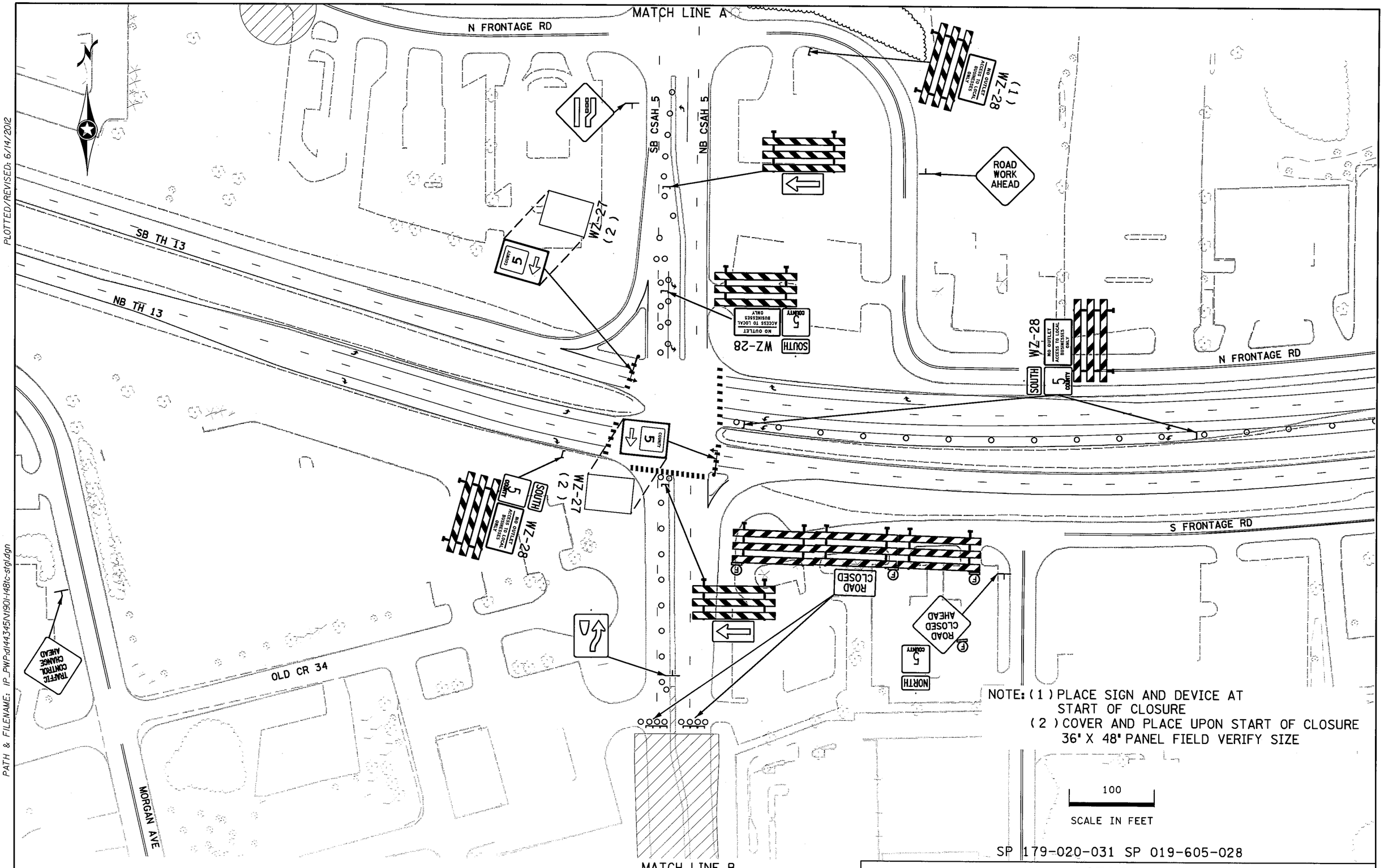

NOTE: (1) PLACE SIGN AND DEVICE AT START OF CLOSURE
(2) COVER AND PLACE UPON START OF CLOSURE 36" X 48" PANEL FIELD VERIFY SIZE

SP 179-020-031 SP 019-605-028

STAGE 1

DRAWN BY: SNM	CHECKED BY: KF	CERTIFIED BY _____ LICENSED PROFESSIONAL ENGINEER	LIC. NO. 40535	DATE 6/14/2012

STATE PROJ. NO. 1901-148 (TH 13) SHEET NO. TC15 OF TC84 SHEETS

PLOTTED/REVISED: 6/14/2012

DISTRICT ": METRO
IPLOT NAME: 1190I-148tc-stg13
PATH & FILENAME: IP_PWP-dl/443345\1190I-148tc-stg1.dgn

PLOTTED/REVISED: 6/14/2012

DISTRICT #: METRO
IPLOT NAME: 1i901-148tc-stgl4
PATH & FILENAME: IP_PWP:dl443345\1i901-148tc-stgl.dgn

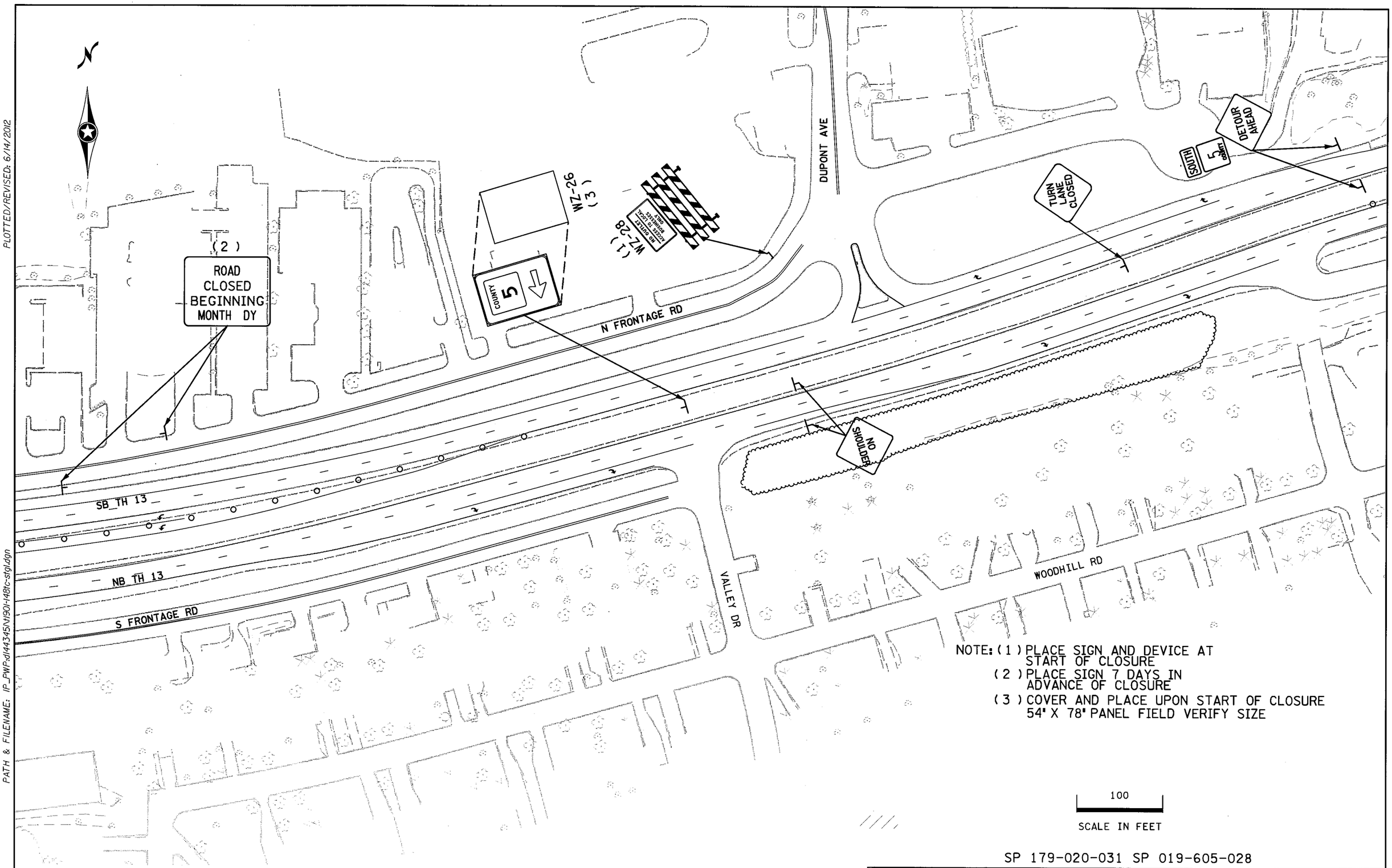

NOTE: (1) PLACE SIGN AND DEVICE AT START OF CLOSURE
(2) PLACE SIGN 7 DAYS IN ADVANCE OF CLOSURE
(3) COVER AND PLACE UPON START OF CLOSURE 54" X 78" PANEL FIELD VERIFY SIZE

SP 179-020-031 SP 019-605-028

STAGE 1

DRAWN BY: SNM	CHECKED BY: KF	CERTIFIED BY _____ LICENSED PROFESSIONAL ENGINEER	LIC. NO. 40535	DATE 6/14/2012	STATE PROJ. NO. 1901-148 (TH 13)	SHEET NO. TC16	OF TC84 SHEETS

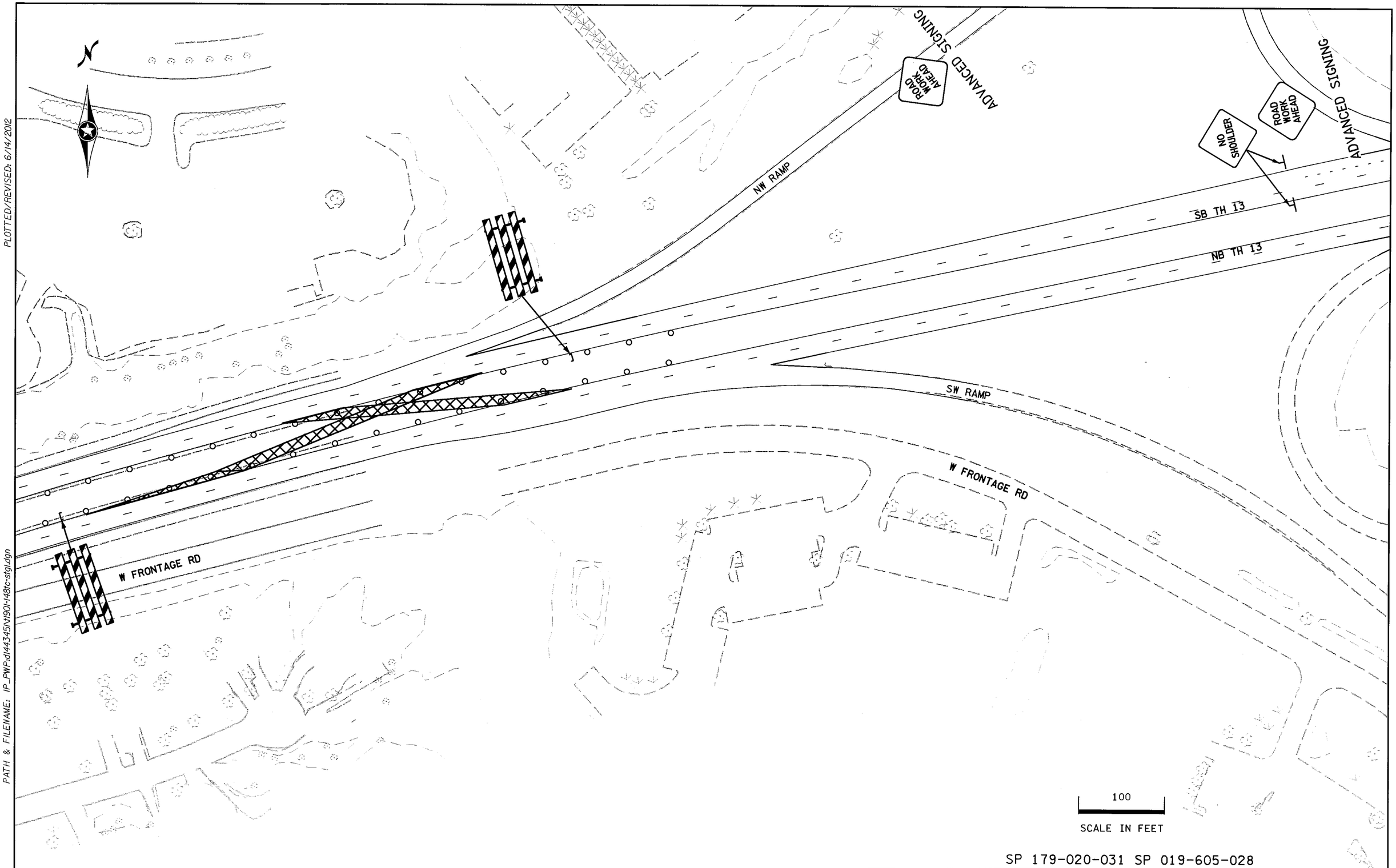

SP 179-020-031 SP 019-605-028

STAGE 1

DRAWN BY: SNM	CHECKED BY: KF	CERTIFIED BY [signature] LICENSED PROFESSIONAL ENGINEER	LIC. NO. 40535	DATE 6/14/2012	STATE PROJ. NO. 1901-148 (TH 13)	SHEET NO. TC17	OF TC84 SHEETS

PLOTTED/REVISED: 6/14/2012

DISTRICT #: METRO
IPLOT NAME: t1901-148tc-stg15
PATH & FILENAME: IP_PWP:d144345\t1901-148tc-stg1.dgn

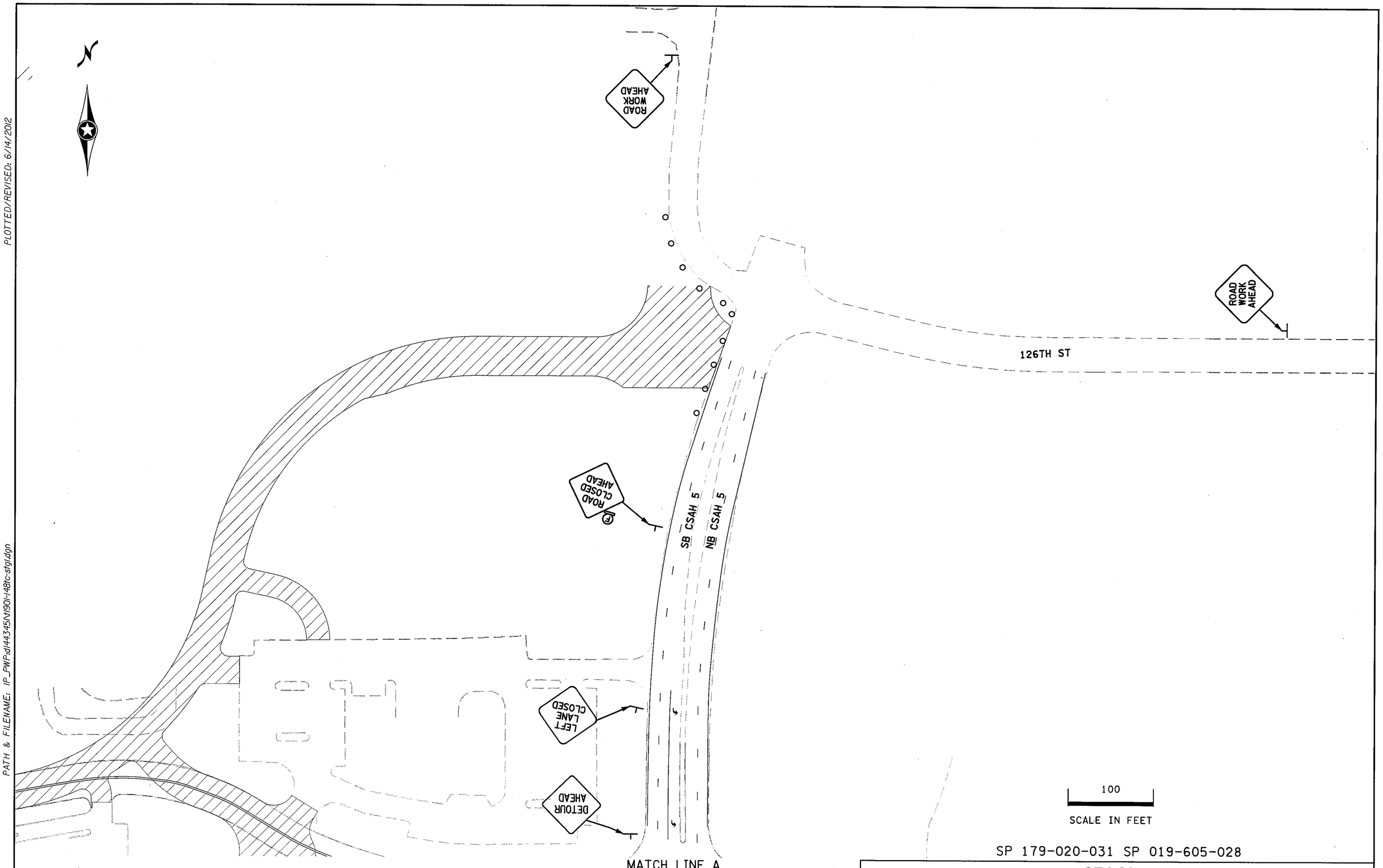

SP 179-020-031 SP 019-605-028

STAGE 1

DRAWN BY: SNM	CHECKED BY: KF	CERTIFIED BY [signature] LICENSED PROFESSIONAL ENGINEER	LIC. NO. 40535	DATE 6/14/2012	STATE PROJ. NO. 1901-148 (TH 13)	SHEET NO. TC18	OF TC84 SHEETS

PLOTTED/REVISED: 6/14/2012

DISTRICT #: METRO
IPLOT NAME: t1901-148tc-stg115
PATH & FILENAME: IP_PWP:d144345\t1901-148tc-stg1.dgn

PLOTTED/REVISED: 6/14/2012

DISTRICT #: METRO
IPLOT NAME: t1901-148tc-stg17
PATH & FILENAME: IP_PWP-dl443345\t1901-148tc-stg1.dgn

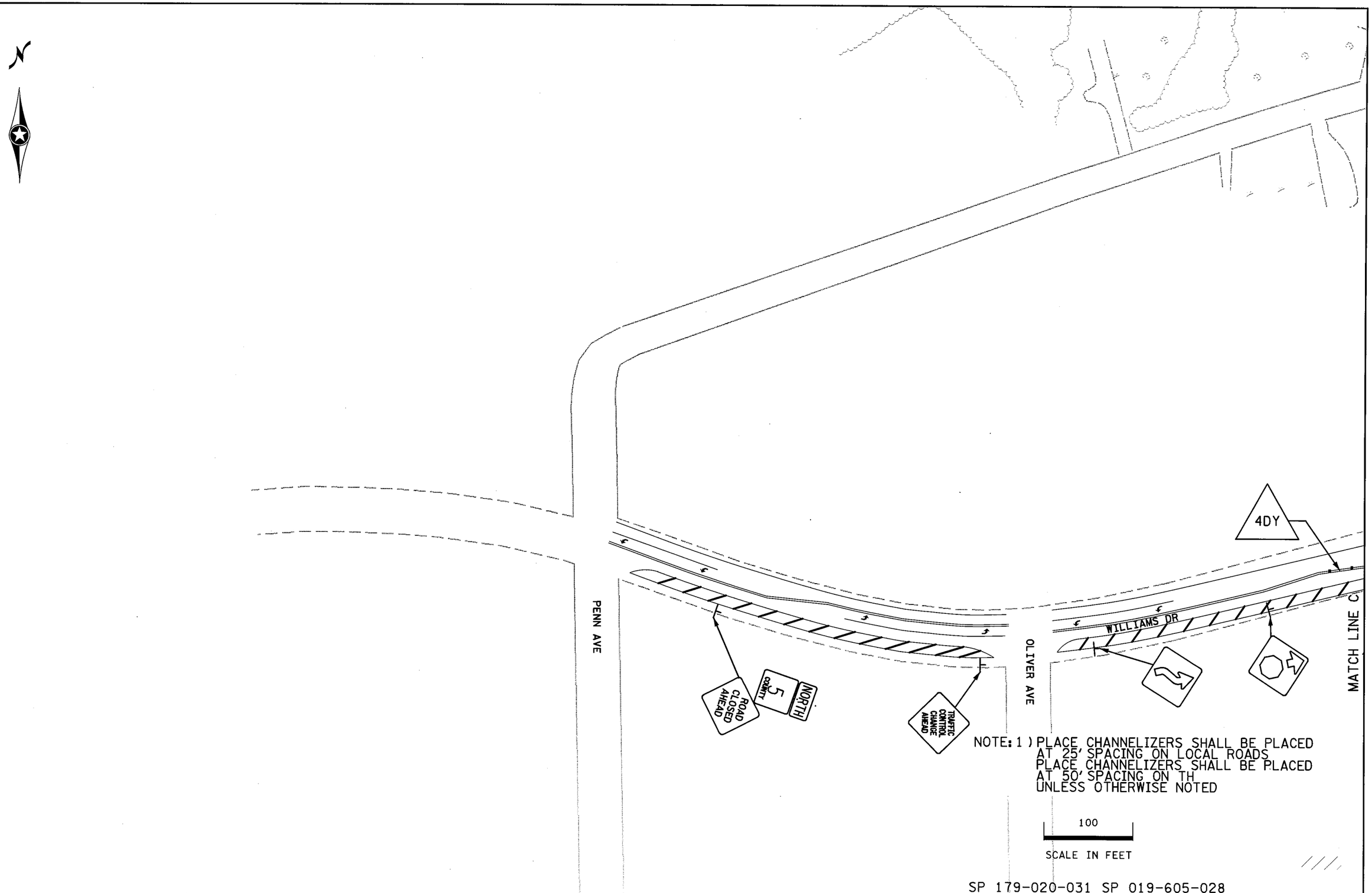

SP 179-020-031 SP 019-605-028

STAGE 1

DRAWN BY: SNM	CHECKED BY: KF	CERTIFIED BY _____ LICENSED PROFESSIONAL ENGINEER	LIC. NO. 40535	DATE 6/14/2012	STATE PROJ. NO. 1901-148 (TH 13)	SHEET NO. TC19	OF TC84 SHEETS

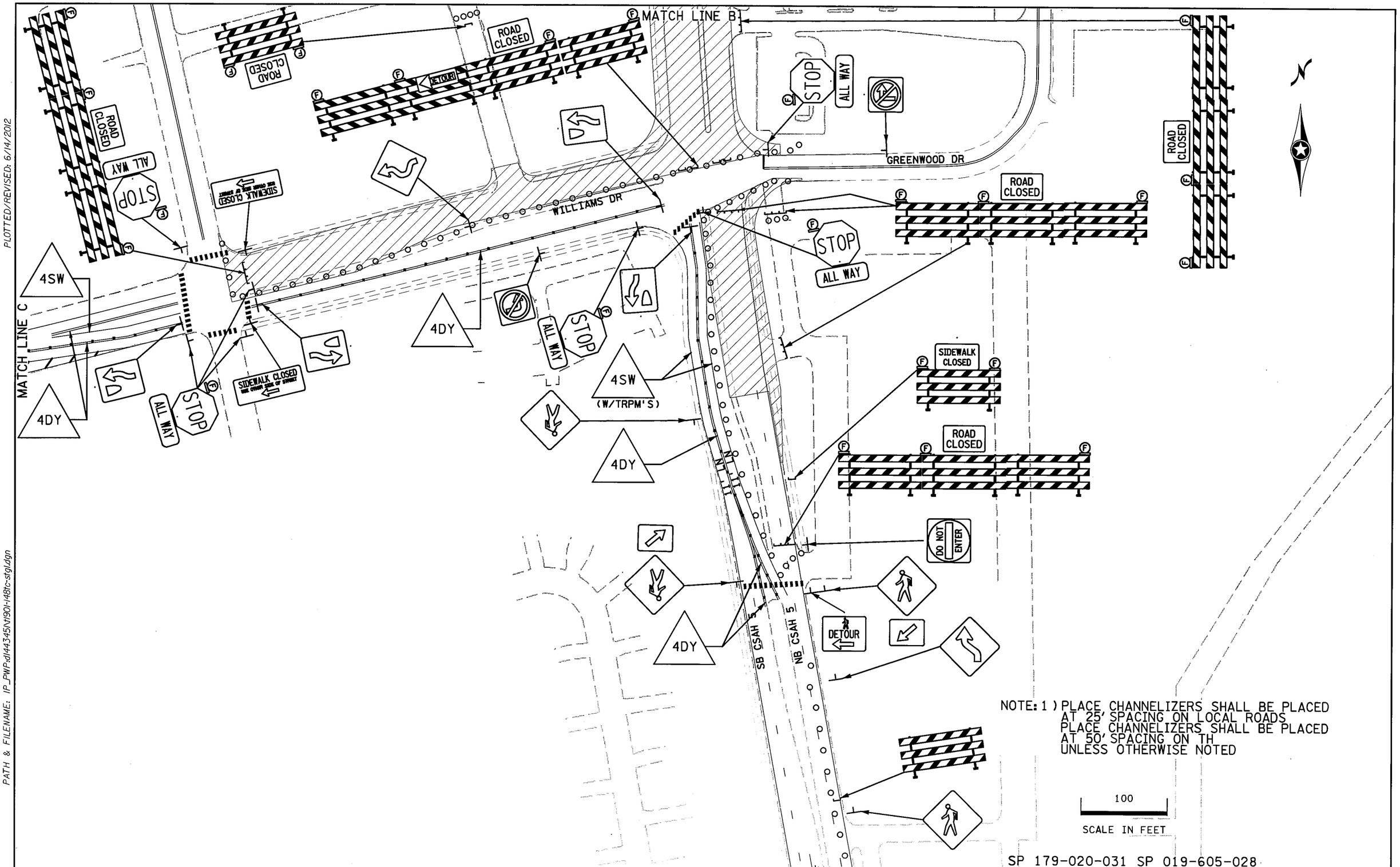

NOTE: 1) PLACE CHANNELIZERS SHALL BE PLACED AT 25' SPACING ON LOCAL ROADS
PLACE CHANNELIZERS SHALL BE PLACED AT 50' SPACING ON TH
UNLESS OTHERWISE NOTED

100
SCALE IN FEET

SP 179-020-031 SP 019-605-028

STAGE 1

DRAWN BY: SNM	CHECKED BY: KF	CERTIFIED BY _____ LICENSED PROFESSIONAL ENGINEER	LIC. NO. 40535	DATE 6/14/2012

STATE PROJ. NO. 1901-148 (TH 13) SHEET NO. TC20 OF TC84 SHEETS

PLOTTED/REVISED: 6/14/2012

DISTRICT #: METRO
IPLOT NAME: t1901-148tc-stgl17
PATH & FILENAME: IP_PWP:dl443345\t1901-148tc-stgl.dgn

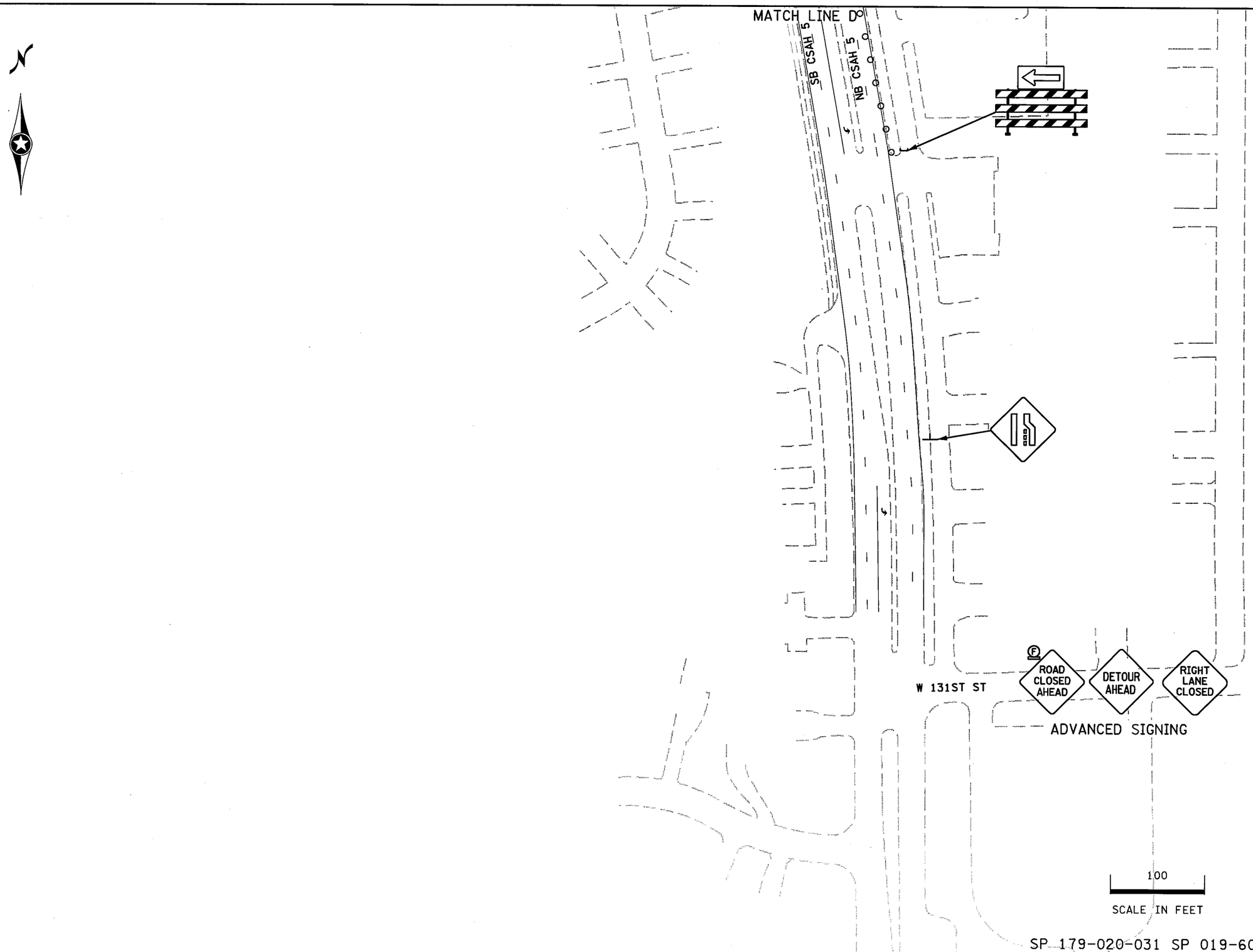

SP 179-020-031 SP 019-605-028

STAGE 1

DRAWN BY: SNM	CHECKED BY: TD	CERTIFIED BY _____ LICENSED PROFESSIONAL ENGINEER	LIC. NO. 40535	DATE 6/14/2012	STATE PROJ. NO. 1901-148 (TH 13)	SHEET NO. TC21	OF TC84 SHEETS

PLOTTED/REVISED: 6/14/2012

DISTRICT #: METRO
IPLOT NAME: t1901-148tc-stgl18
PATH & FILENAME: IP_PWP:dl443345\t1901-148tc-stgl.dgn

PLOTTED/REVISED: 6/14/2012

DISTRICT #: METRO
IPLOT NAME: 1190I-148tc-stgIA9
PATH & FILENAME: IP_PWP:dl/443445\1190I-148tc-stgIA.dgn

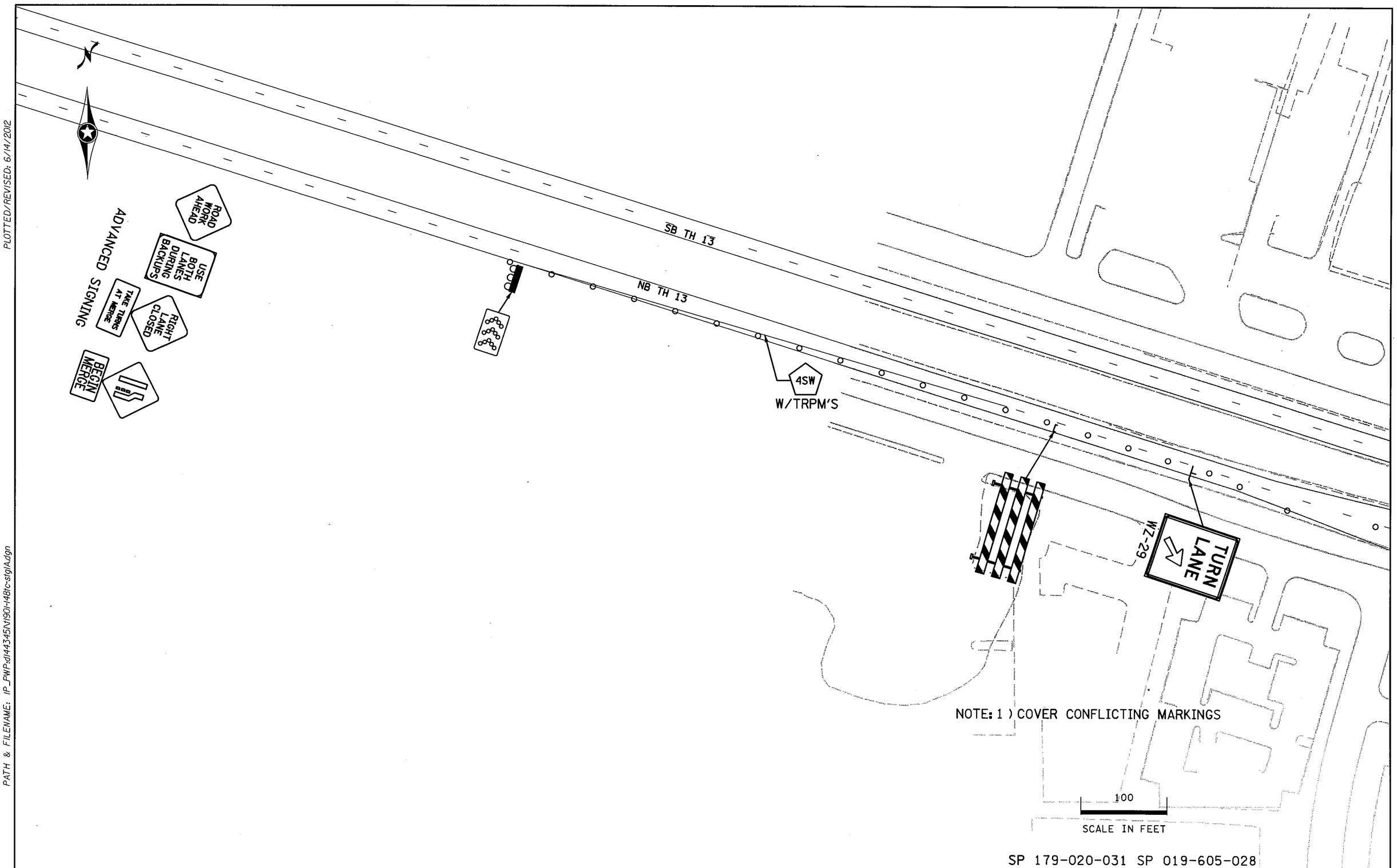

SP 179-020-031 SP 019-605-028

STAGE 1A

DRAWN BY: SNM	CHECKED BY: KF	CERTIFIED BY _____ LICENSED PROFESSIONAL ENGINEER	LIC. NO. 40535	DATE 6/14/2012	STATE PROJ. NO. 1901-148 (TH 13)	SHEET NO. TC22	OF TC84 SHEETS

PLOTTED/REVISED: 6/14/2012

DISTRICT #: METRO
IPLOT NAME: 1190I-148tc-stg1A1
PATH & FILENAME: IP_PWP:d1443451\1190I-148tc-stg1A.dgn

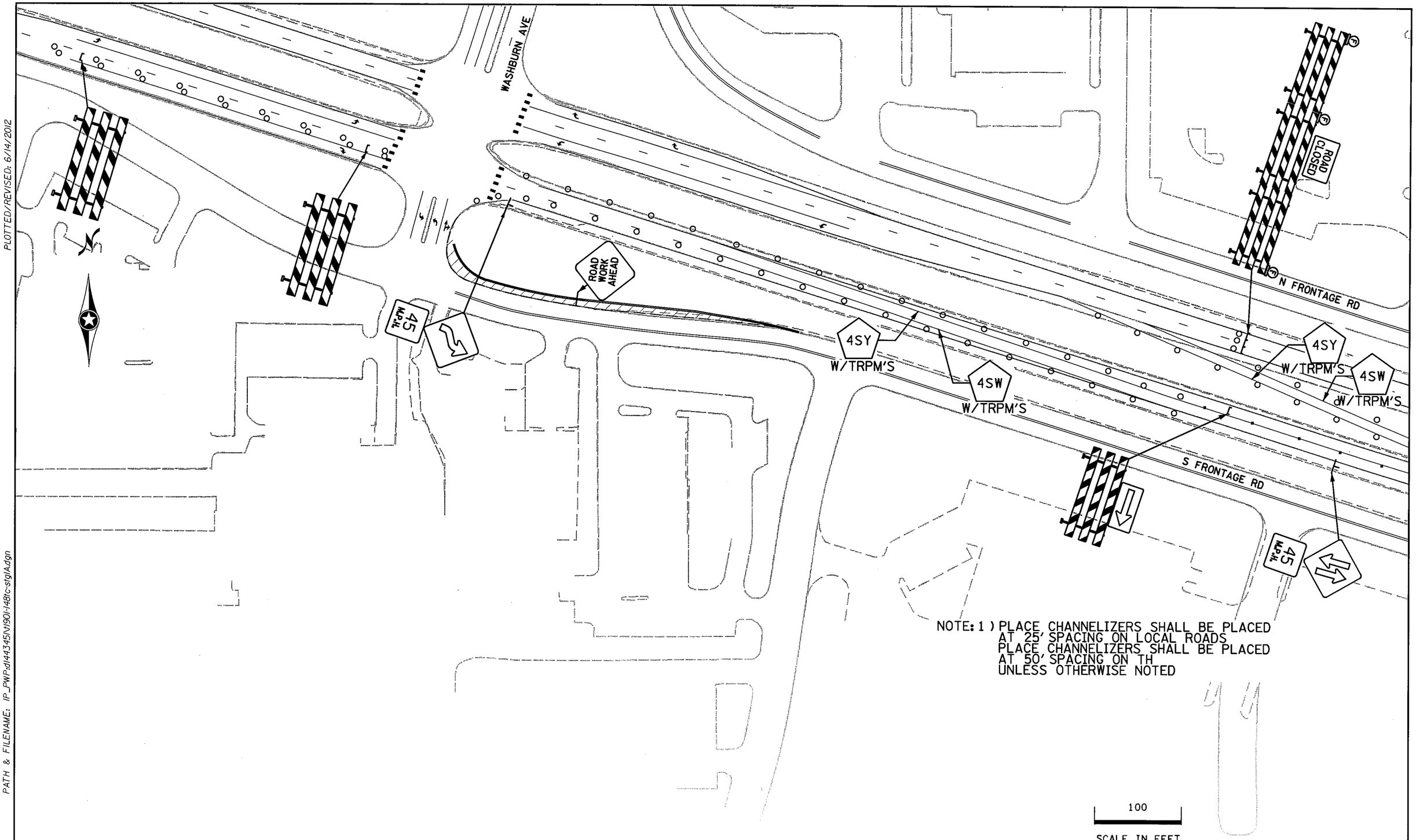

SP 179-020-031 SP 019-605-028

STAGE 1A

DRAWN BY: SNM	CHECKED BY: KF	CERTIFIED BY _____ LICENSED PROFESSIONAL ENGINEER	LIC. NO. 40535	DATE 6/14/2012	STATE PROJ. NO. 1901-148 (TH 13)	SHEET NO. TC23	OF TC84 SHEETS

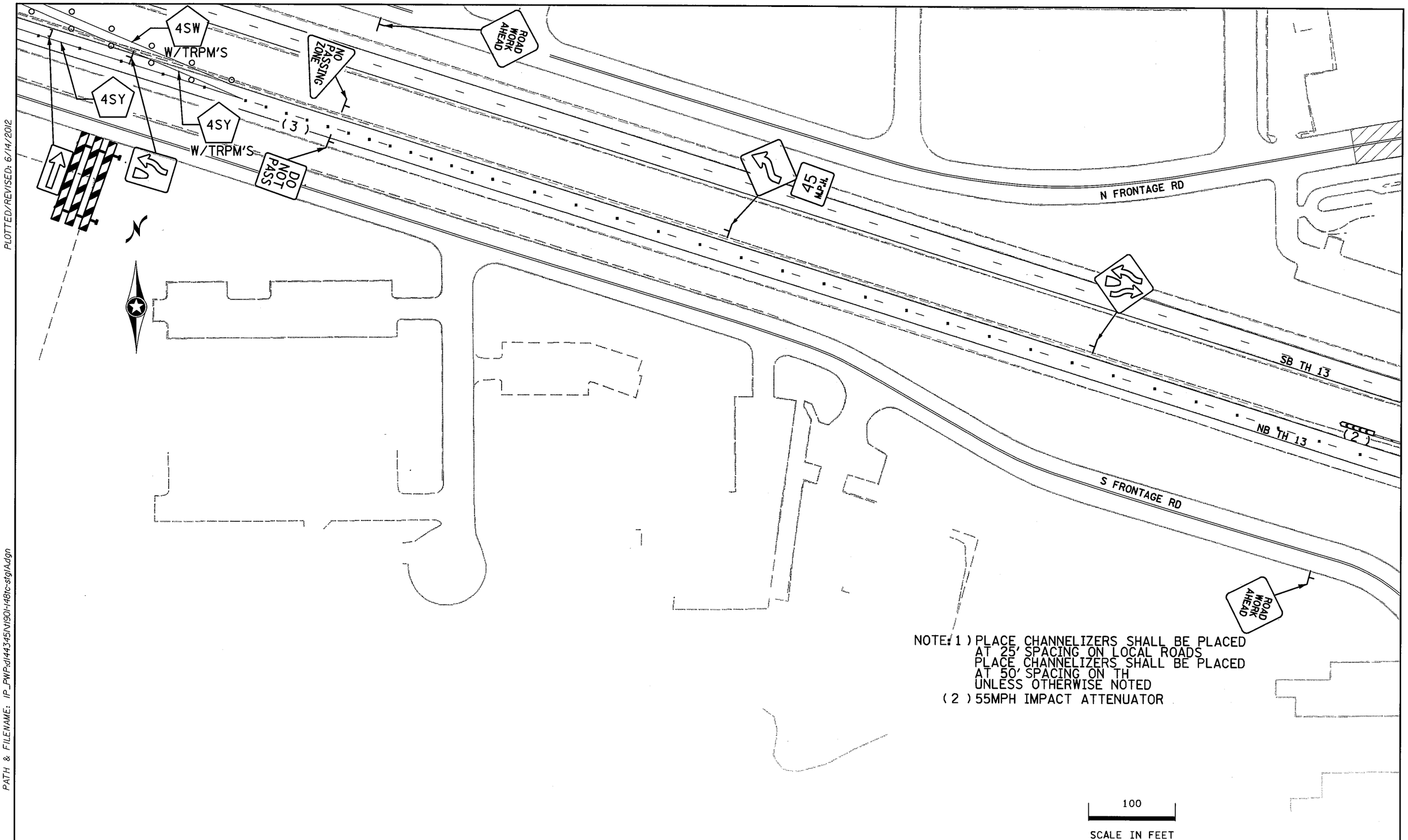

NOTE: 1) PLACE CHANNELIZERS SHALL BE PLACED AT 25' SPACING ON LOCAL ROADS
PLACE CHANNELIZERS SHALL BE PLACED AT 50' SPACING ON TH
UNLESS OTHERWISE NOTED
(2) 55MPH IMPACT ATTENUATOR

SP 179-020-031 SP 019-605-028

STAGE 1A

DRAWN BY: SNM	CHECKED BY: KF	CERTIFIED BY _____ LICENSED PROFESSIONAL ENGINEER	LIC. NO. 40535	DATE 6/14/2012	STATE PROJ. NO. 1901-148 (TH 13)	SHEET NO. TC24	OF TC84 SHEETS

PLOTTED/REVISED: 6/14/2012

DISTRICT #: METRO
IPLOT NAME: 1190I-148tc-stgIA2
PATH & FILENAME: IP_PWP:dl44345\1190I-148tc-stgIA.dgn

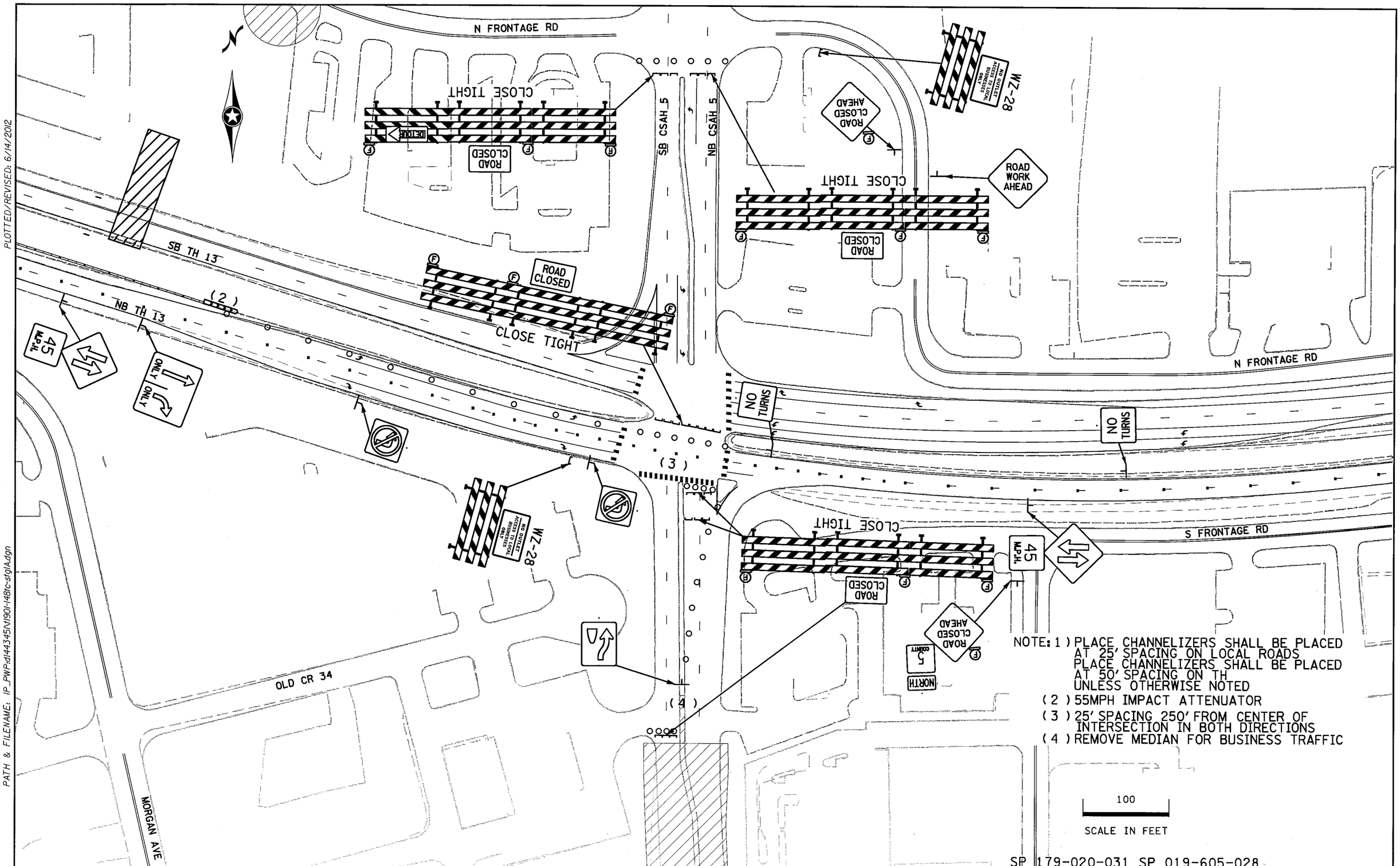

NOTE: 1) PLACE CHANNELIZERS SHALL BE PLACED AT 25' SPACING ON LOCAL ROADS
PLACE CHANNELIZERS SHALL BE PLACED AT 50' SPACING ON TH
UNLESS OTHERWISE NOTED
(2) 55MPH IMPACT ATTENUATOR
(3) 25' SPACING 250' FROM CENTER OF INTERSECTION IN BOTH DIRECTIONS
(4) REMOVE MEDIAN FOR BUSINESS TRAFFIC

SP 179-020-031 SP 019-605-028

STAGE 1A

DRAWN BY: SNM	CHECKED BY: KF	CERTIFIED BY _____ LICENSED PROFESSIONAL ENGINEER	LIC. NO. 40535	DATE 6/14/2012	STATE PROJ. NO. 1901-148 (TH 13)	SHEET NO. TC25	OF TC84 SHEETS

DISTRICT #: METRO
IPLOT NAME: 1190I-148Ic-stgIA3
PATH & FILENAME: IP_PWP:dl443345\N190I-148Ic-stgIA.dgn
PLOTTED/REVISED: 6/14/2012

PLOTTED/REVISED: 6/14/2012

DISTRICT #: METRO
IPLOT NAME: 1190I-148tc-stgIA4
PATH & FILENAME: IP_PWP:d144345\N190I-148tc-stgIA.dgn

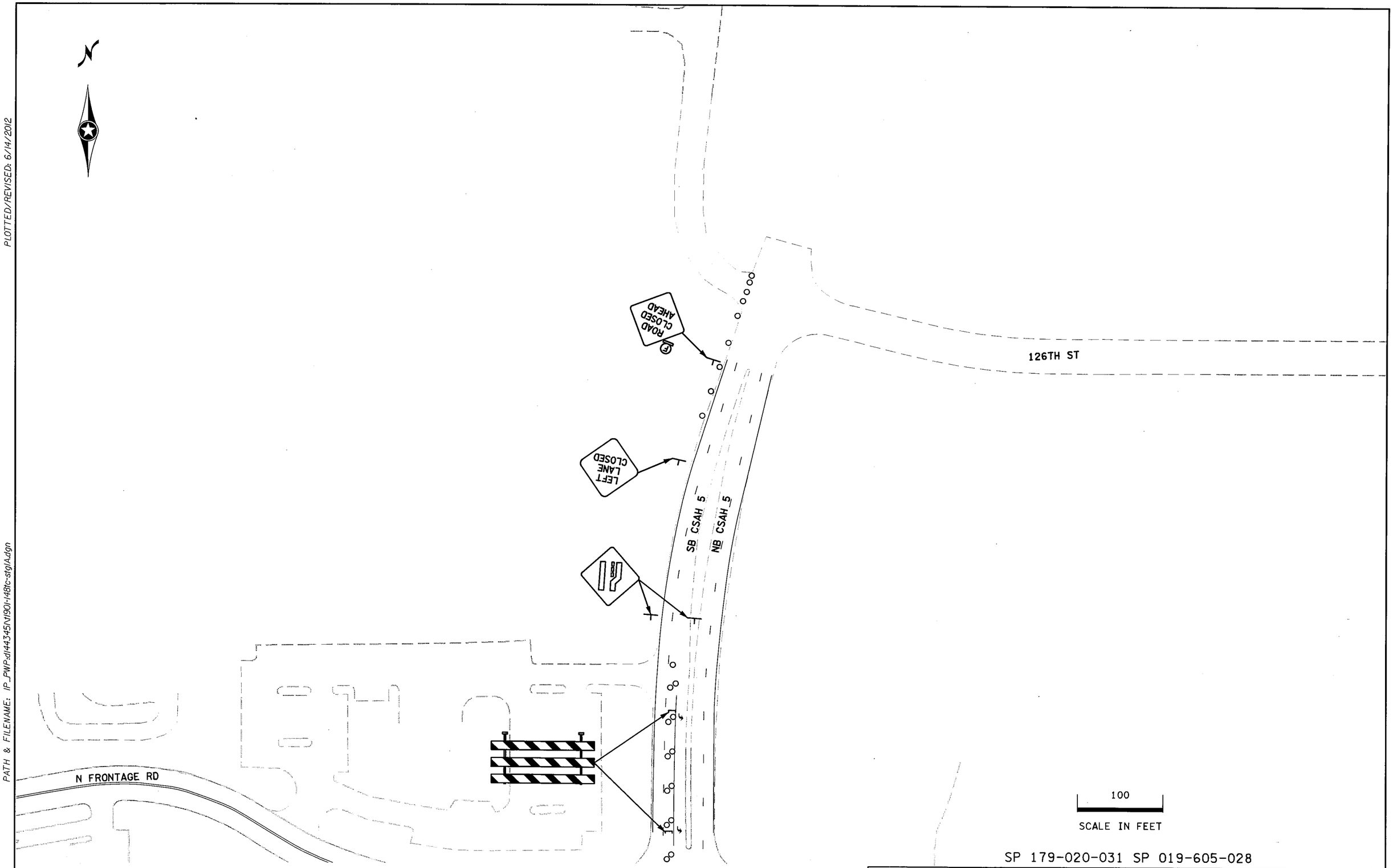

SP 179-020-031 SP 019-605-028

STAGE 1A

DRAWN BY: SNM	CHECKED BY: KF	CERTIFIED BY _____ LICENSED PROFESSIONAL ENGINEER	LIC. NO. 40535	DATE 6/14/2012	STATE PROJ. NO. 1901-148 (TH 13)	SHEET NO. TC26	OF TC84 SHEETS

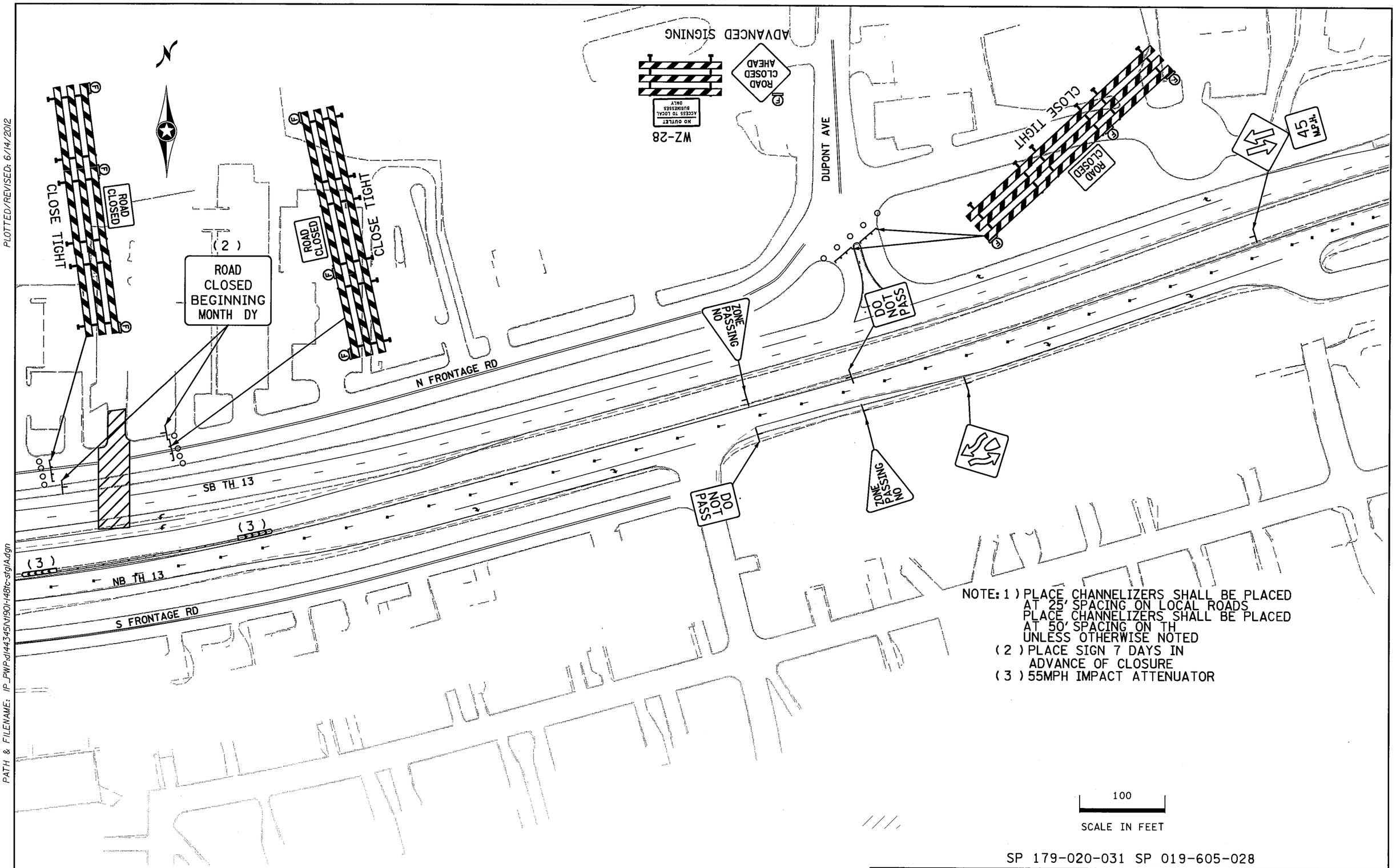

NOTE: 1) PLACE CHANNELIZERS SHALL BE PLACED AT 25' SPACING ON LOCAL ROADS PLACE CHANNELIZERS SHALL BE PLACED AT 50' SPACING ON TH UNLESS OTHERWISE NOTED
(2) PLACE SIGN 7 DAYS IN ADVANCE OF CLOSURE
(3) 55MPH IMPACT ATTENUATOR

SP 179-020-031 SP 019-605-028

STAGE 1A

DRAWN BY: SNM	CHECKED BY: KF	CERTIFIED BY _____ LICENSED PROFESSIONAL ENGINEER	LIC. NO. 40535	DATE 6/14/2012	STATE PROJ. NO. 1901-148 (TH 13) SHEET NO. TC27 OF TC84 SHEETS

PLOTTED/REVISED: 6/14/2012

DISTRICT #: METRO
IPLOT NAME: t1901-148tc-stgIA5
PATH & FILENAME: IP_PWP:dl443345\t1901-148tc-stgIA.dgn

PLOTTED/REVISED: 6/14/2012

DISTRICT #: METRO
IPLOT NAME: 1190I-148tc-stgIA6
PATH & FILENAME: IP_PWP:df44345\1190I-148tc-stgIA.dgn

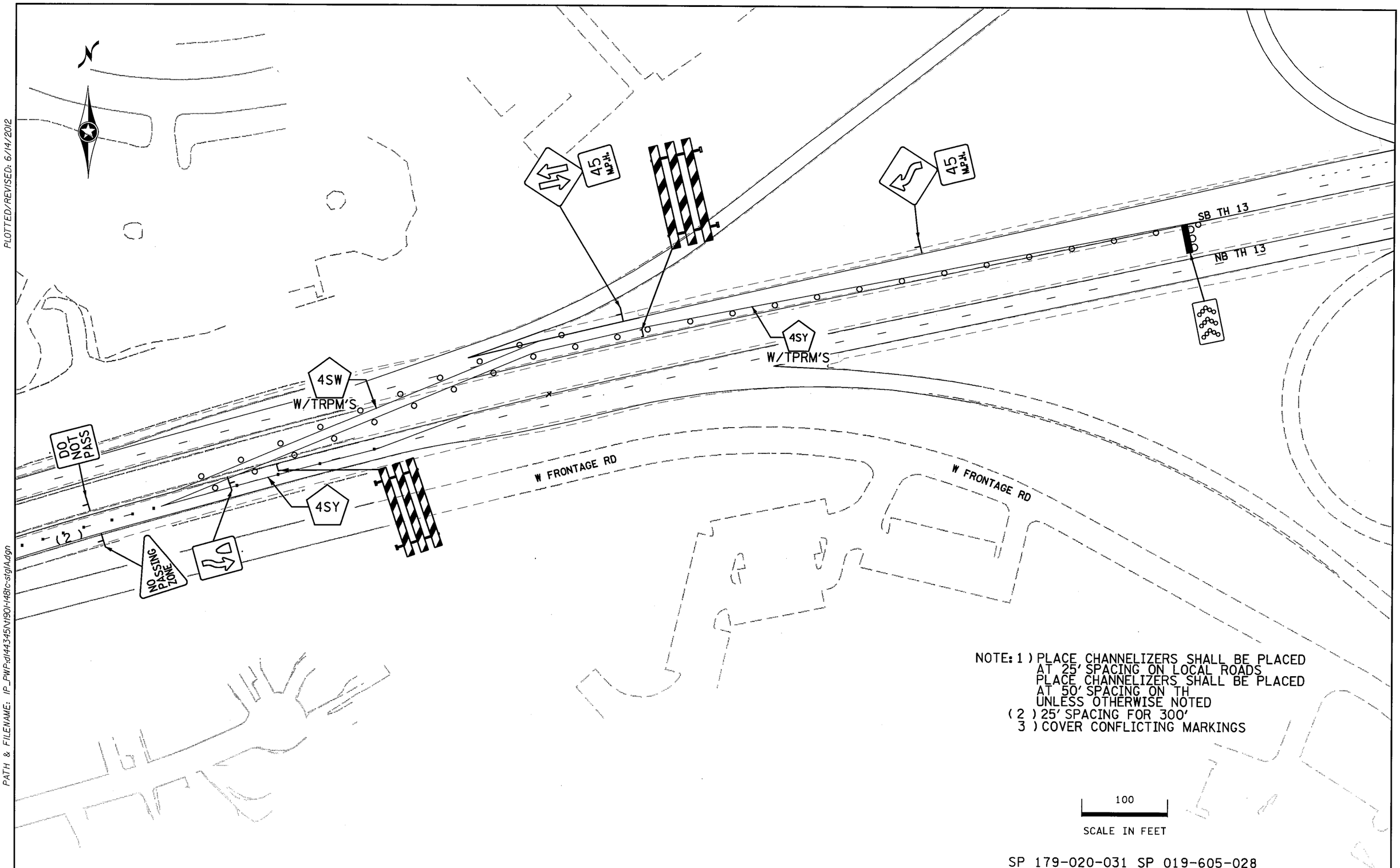

NOTE: 1) PLACE CHANNELIZERS SHALL BE PLACED AT 25' SPACING ON LOCAL ROADS
PLACE CHANNELIZERS SHALL BE PLACED AT 50' SPACING ON TH
UNLESS OTHERWISE NOTED
(2) 25' SPACING FOR 300'
3) COVER CONFLICTING MARKINGS

SP 179-020-031 SP 019-605-028

STAGE 1A

DRAWN BY: SNM	CHECKED BY: KF	CERTIFIED BY _____ LICENSED PROFESSIONAL ENGINEER	LIC. NO. 40535	DATE 6/14/2012	STATE PROJ. NO. 1901-148 (TH 13)	SHEET NO. TC28	OF TC84 SHEETS

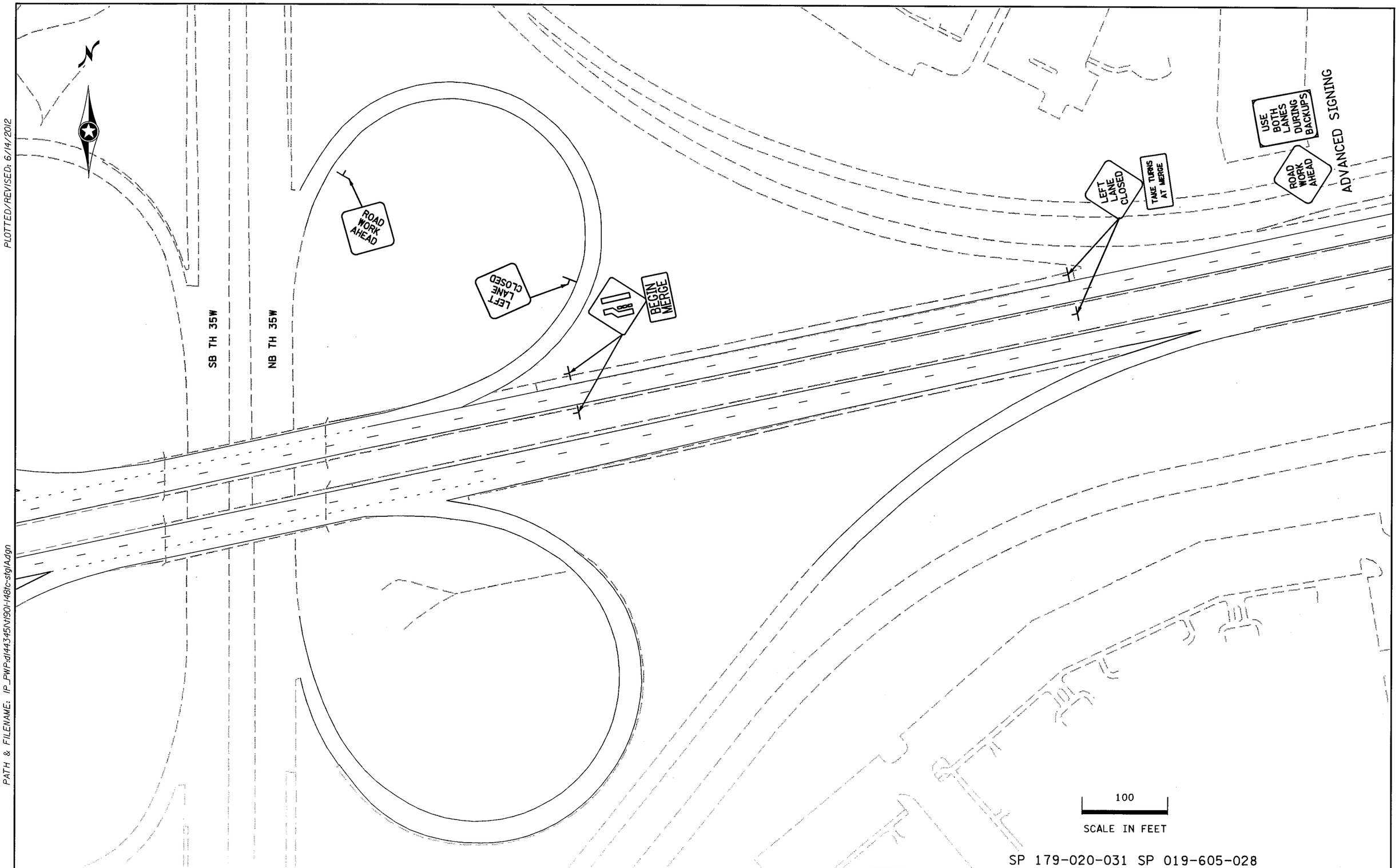

SP 179-020-031 SP 019-605-028

STAGE 1A

DRAWN BY: SNM	CHECKED BY: KF	CERTIFIED BY _____ LICENSED PROFESSIONAL ENGINEER	LIC. NO. 40535	DATE 6/14/2012

STATE PROJ. NO. 1901-148 (TH 13) SHEET NO. TC29 OF TC84 SHEETS

PLOTTED/REVISED: 6/14/2012

DISTRICT #: METRO
IPLOT NAME: 1901-148tc-stgIA7
PATH & FILENAME: IP_PWP-d/44345/N1901-148tc-stgIAdgn

NOTE: (1) CLOSE AS PER MNMUTCD NOT SHOWN IN PLAN
(2) COVER AND PLACE UPON START OF CLOSURE 144" X 30" PANEL FIELD VERIFY SIZE
(3) COVER AND PLACE UPON START OF CLOSURE 24" X 36" PANEL FIELD VERIFY SIZE

SP 179-020-031 SP 019-605-028

STAGE 1A

DRAWN BY: SNM	CHECKED BY: KF	CERTIFIED BY _____ LICENSED PROFESSIONAL ENGINEER	LIC. NO. 40535	DATE 6/14/2012	STATE PROJ. NO. 1901-148 (TH 13)	SHEET NO. TC30	OF TC84 SHEETS

PLOTTED/REVISED: 6/14/2012

DISTRICT #: METRO
IPLOT NAME: t1901-148tc-stgIA8
PATH & FILENAME: IP_PWP:dl443451\t1901-148tc-stgIA.dgn

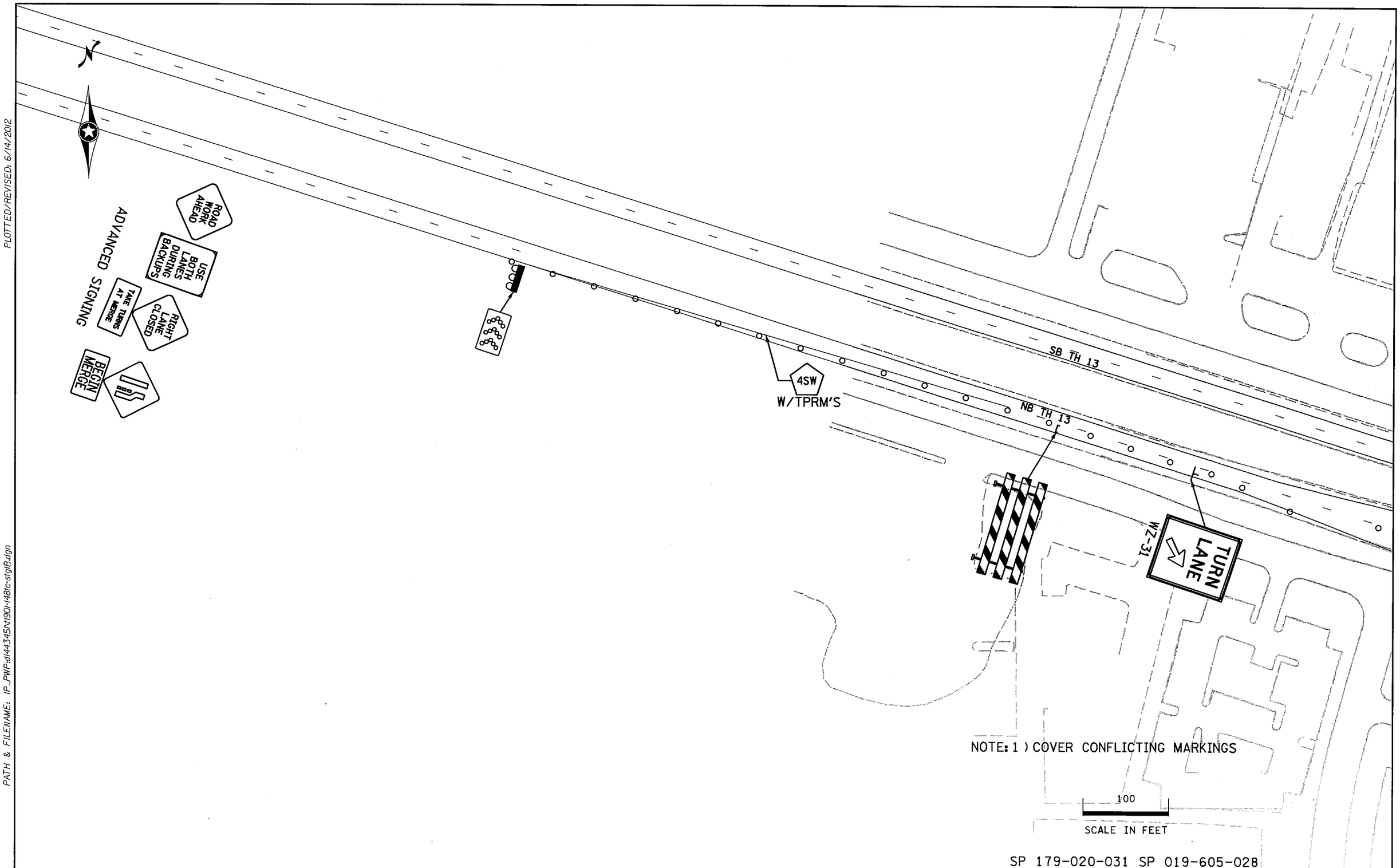

SP 179-020-031 SP 019-605-028

STAGE 1B

DRAWN BY: SNM	CHECKED BY: KF	CERTIFIED BY [signature] LICENSED PROFESSIONAL ENGINEER	LIC. NO. 40535	DATE 6/14/2012	STATE PROJ. NO. 1901-148 (TH 13)	SHEET NO. TC31	OF TC84 SHEETS

PLOTTED/REVISED: 6/14/2012

DISTRICT #: METRO
IPLOT NAME: 1190I-148tc-stgIBI4
PATH & FILENAME: IP_PWP:dl44345\1901-148tc-stgIB.dgn

PLOTTED/REVISED: 6/14/2012

DISTRICT #: METRO
IPLOT NAME: 1901-148tc-stgIB8
PATH & FILENAME: IP_PWP:dl443345\N1901-148tc-stgIB.dgn

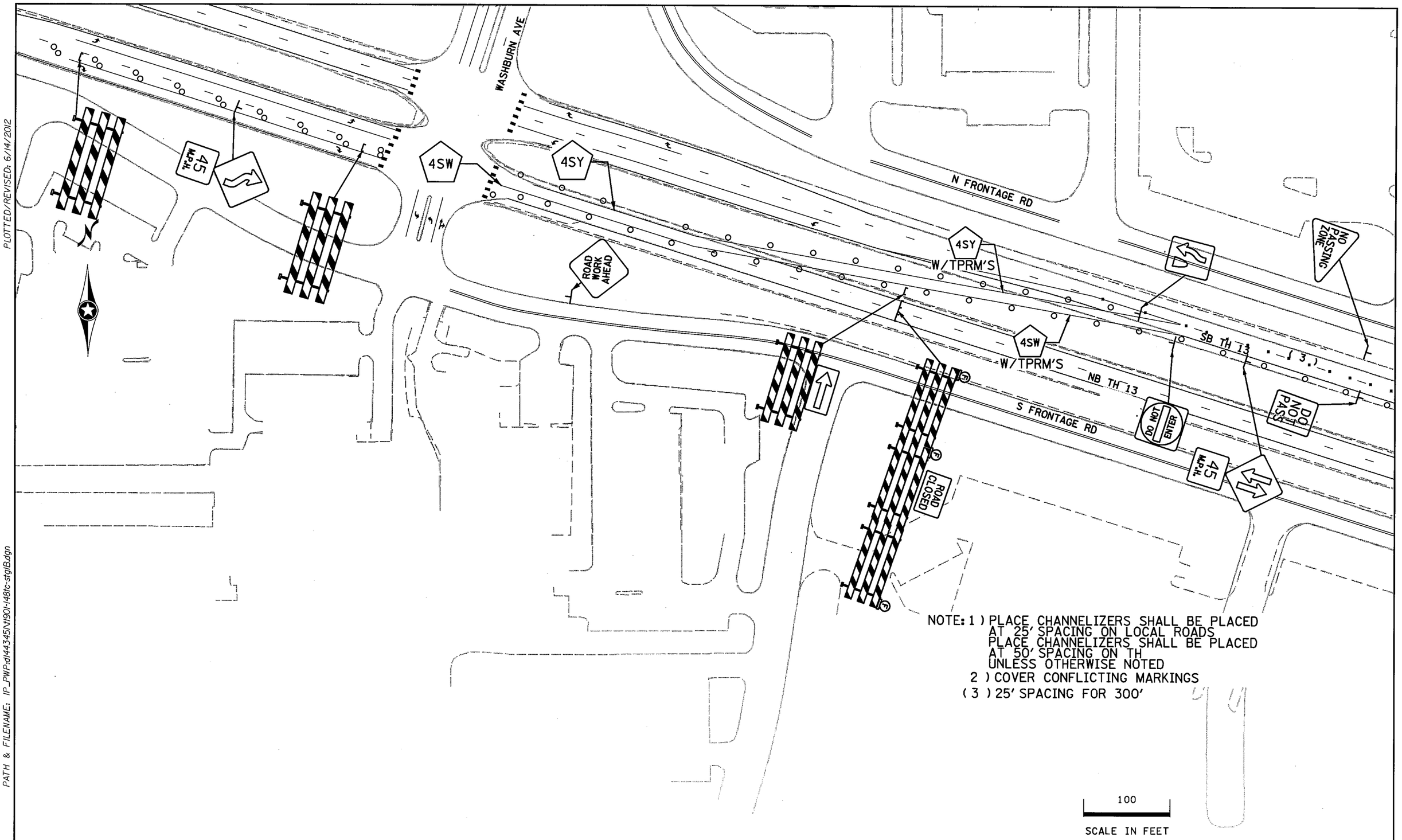

NOTE: 1) PLACE CHANNELIZERS SHALL BE PLACED AT 25' SPACING ON LOCAL ROADS
PLACE CHANNELIZERS SHALL BE PLACED AT 50' SPACING ON TH
UNLESS OTHERWISE NOTED
2) COVER CONFLICTING MARKINGS
(3) 25' SPACING FOR 300'

SP 179-020-031 SP 019-605-028

STAGE 1B

DRAWN BY: SNM	CHECKED BY: KF	CERTIFIED BY _____ LICENSED PROFESSIONAL ENGINEER	LIC. NO. 40535	DATE 6/14/2012	STATE PROJ. NO. 1901-148 (TH 13)	SHEET NO. TC32	OF TC84 SHEETS

PLOTTED/REVISED: 6/14/2012

DISTRICT #: METRO
IPLOT NAME: 1190I-148tc-stgIB9
PATH & FILENAME: IP_PWP:dl44345\1190I-148tc-stgIB.dgn

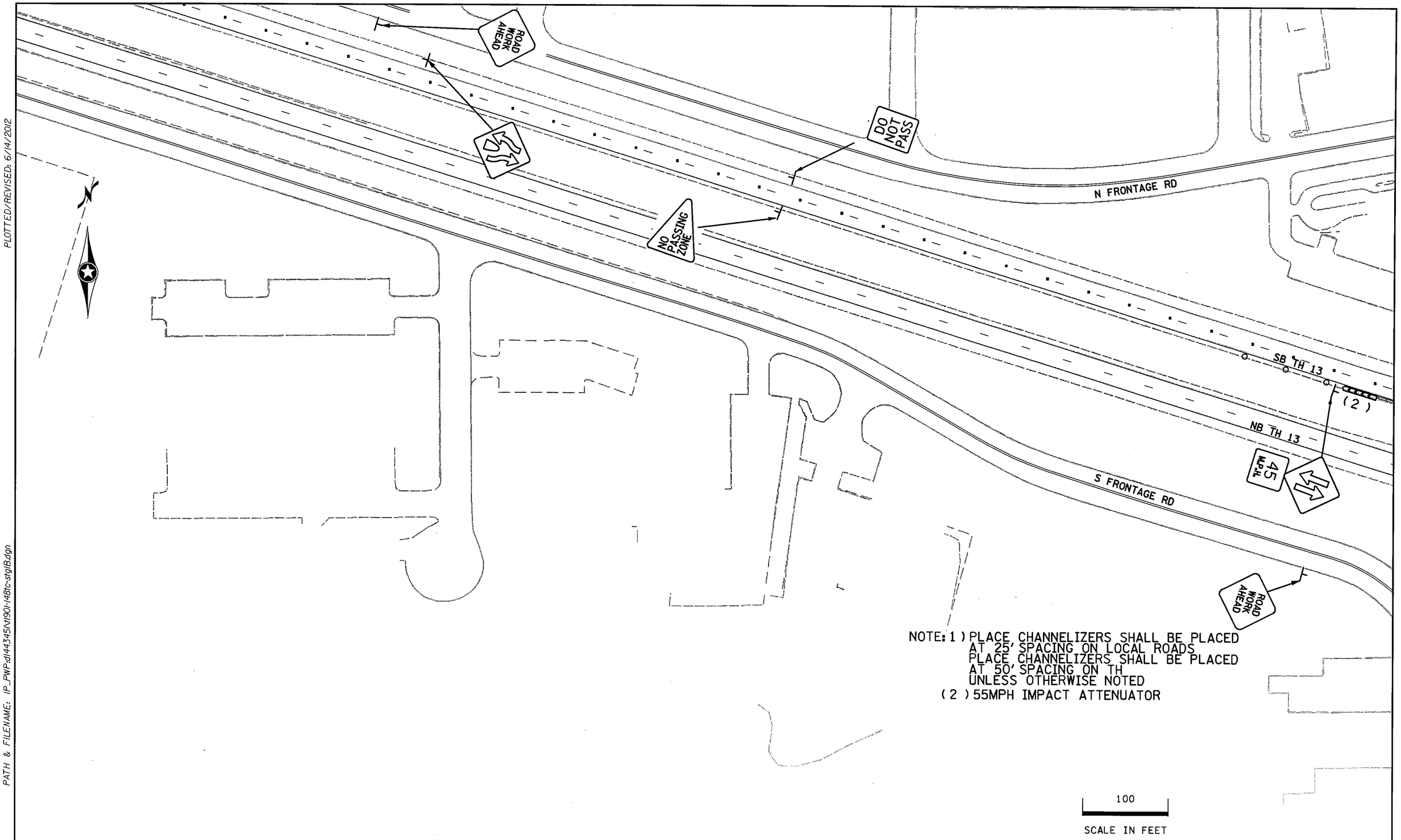

NOTE: 1) PLACE CHANNELIZERS SHALL BE PLACED AT 25' SPACING ON LOCAL ROADS
PLACE CHANNELIZERS SHALL BE PLACED AT 50' SPACING ON TH UNLESS OTHERWISE NOTED
(2) 55MPH IMPACT ATTENUATOR

SP 179-020-031 SP 019-605-028

STAGE 1B

DRAWN BY: SNM	CHECKED BY: KF	CERTIFIED BY _____ LICENSED PROFESSIONAL ENGINEER	LIC. NO. 40535	DATE 6/14/2012	STATE PROJ. NO. 1901-148 (TH 13)	SHEET NO. TC33	OF TC84 SHEETS

NOTE: 1) PLACE CHANNELIZERS SHALL BE PLACED AT 25' SPACING ON LOCAL ROADS
PLACE CHANNELIZERS SHALL BE PLACED AT 50' SPACING ON TH
UNLESS OTHERWISE NOTED
(2) CLOSE TIGHT
(3) 55MPH IMPACT ATTENUATOR
(4) 25' SPACING 250' FROM CENTER OF INTERSECTION IN BOTH DIRECTIONS

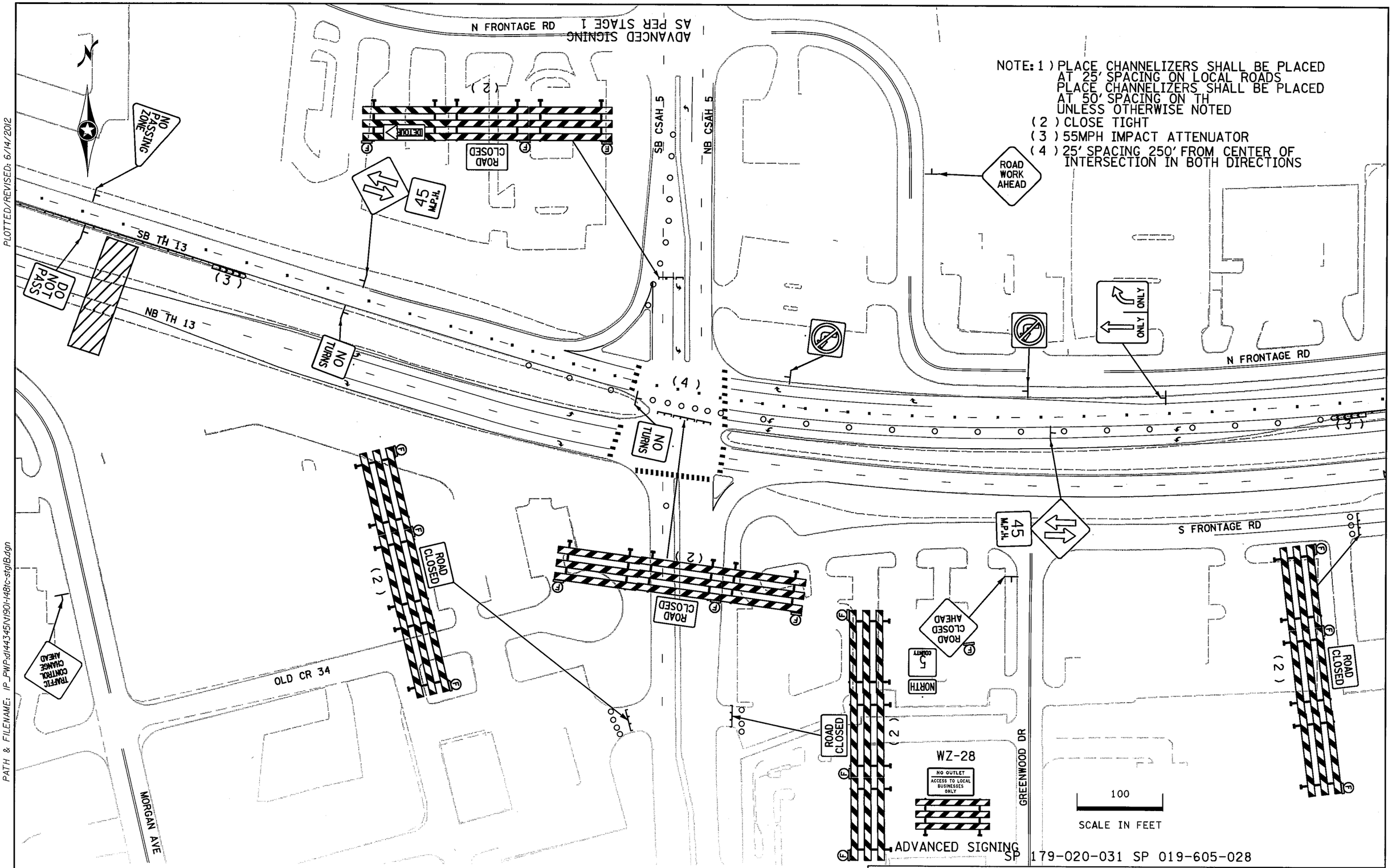

DISTRICT #: METRO
IPLOT NAME: 1190I-148tc-stgIBI0
PATH & FILENAME: IP_PWP-dl44345\1190I-148tc-stgIB.dgn

PLOTTED/REVISED: 6/14/2012

STAGE 1B

DRAWN BY: SNM	CHECKED BY: KF	CERTIFIED BY _____ LICENSED PROFESSIONAL ENGINEER	LIC. NO. 40535	DATE 6/14/2012	STATE PROJ. NO. 1901-148 (TH 13)	SHEET NO. TC34	OF TC84 SHEETS

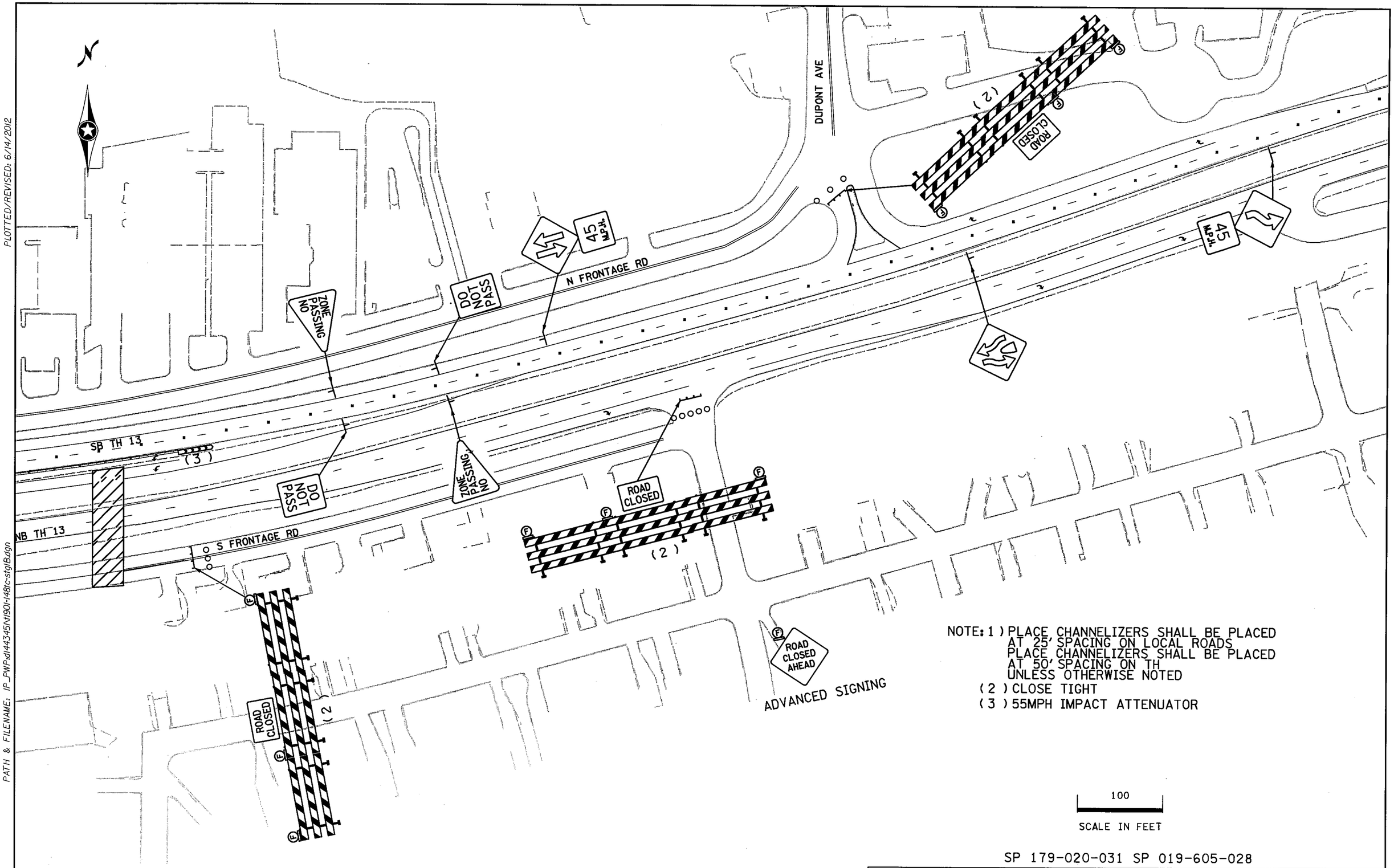

NOTE: 1) PLACE CHANNELIZERS SHALL BE PLACED AT 25' SPACING ON LOCAL ROADS
PLACE CHANNELIZERS SHALL BE PLACED AT 50' SPACING ON TH
UNLESS OTHERWISE NOTED
(2) CLOSE TIGHT
(3) 55MPH IMPACT ATTENUATOR

SP 179-020-031 SP 019-605-028

STAGE 1B

DRAWN BY: SNM	CHECKED BY: KF	CERTIFIED BY [signature] LICENSED PROFESSIONAL ENGINEER	LIC. NO. 40535	DATE 6/14/2012	STATE PROJ. NO. 1901-148 (TH 13)	SHEET NO. TC35	OF TC84 SHEETS

PLOTTED/REVISED: 6/14/2012

DISTRICT #: METRO
IPLOT NAME: t1901-148tc-stg1B11
PATH & FILENAME: IP_PWP:d144345\t1901-148tc-stg1B.dgn

PLOTTED/REVISED: 6/14/2012

DISTRICT #: METRO
IPLOT NAME: 1901-148tc-stgIBi2
PATH & FILENAME: IP_PWP.dl443445\1901-148tc-stgIB.dgn

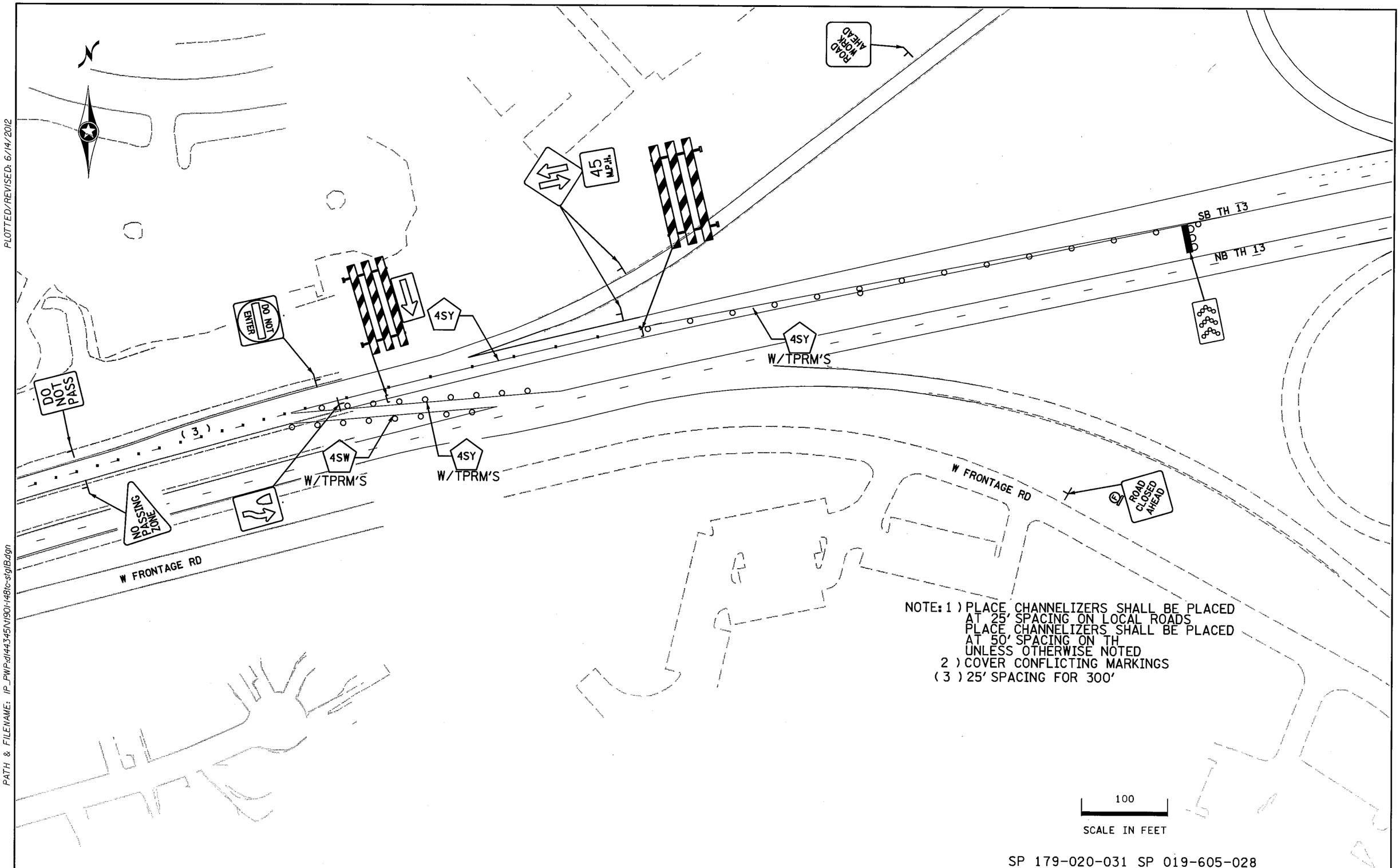

NOTE: 1) PLACE CHANNELIZERS SHALL BE PLACED AT 25' SPACING ON LOCAL ROADS
PLACE CHANNELIZERS SHALL BE PLACED AT 50' SPACING ON TH
UNLESS OTHERWISE NOTED
2) COVER CONFLICTING MARKINGS
(3) 25' SPACING FOR 300'

SP 179-020-031 SP 019-605-028

STAGE 1B

DRAWN BY: SNM	CHECKED BY: KF	CERTIFIED BY _____ LICENSED PROFESSIONAL ENGINEER	LIC. NO. 40535	DATE 6/14/2012	STATE PROJ. NO. 1901-148 (TH 13)	SHEET NO. TC36	OF TC84 SHEETS

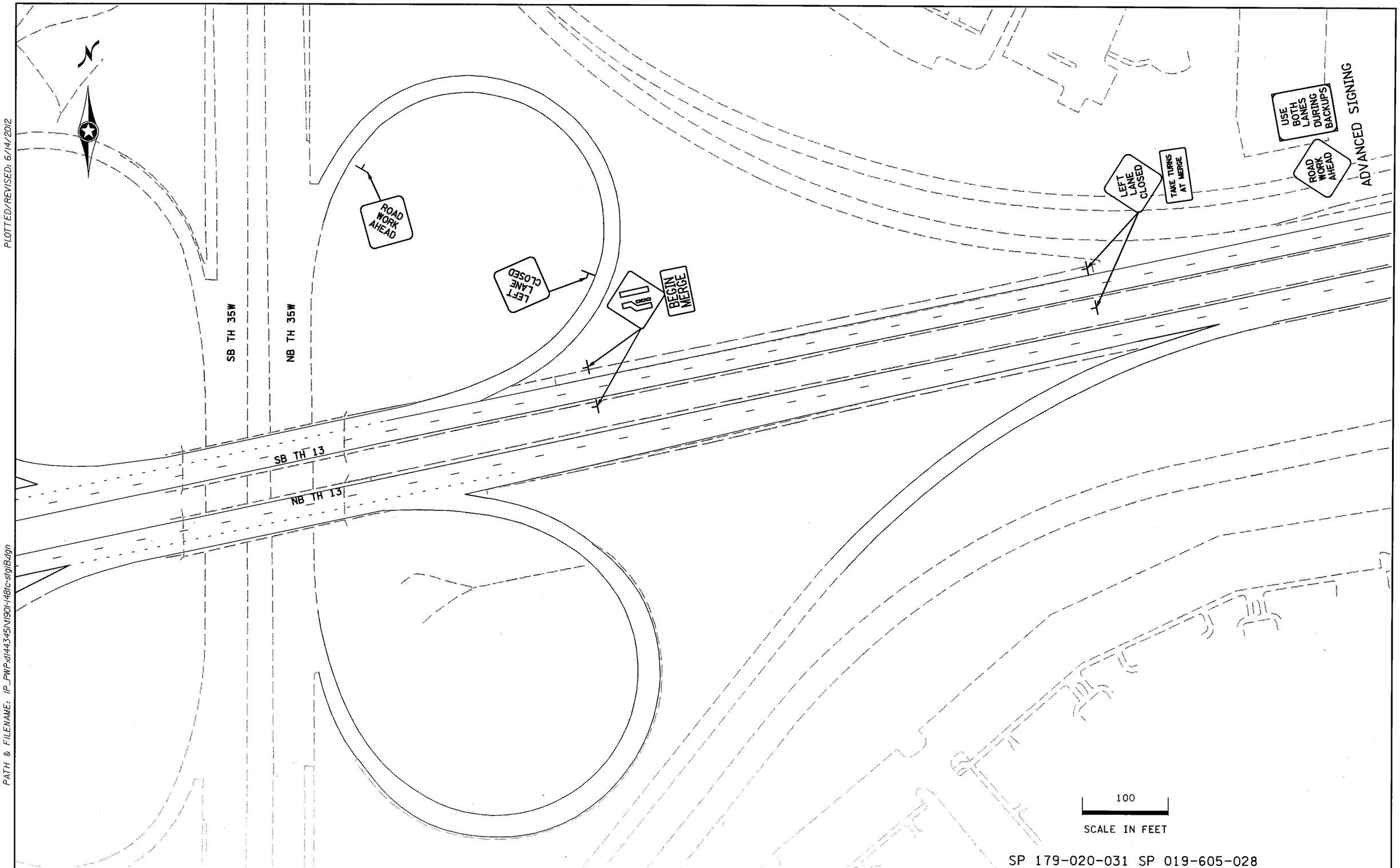

SP 179-020-031 SP 019-605-028

STAGE 1B

DRAWN BY: SNM	CHECKED BY: KF	CERTIFIED BY _____ LICENSED PROFESSIONAL ENGINEER	LIC. NO. 40535	DATE 6/14/2012	STATE PROJ. NO. 1901-148 (TH 13)	SHEET NO. TC37	OF TC84 SHEETS

PLOTTED/REVISED: 6/14/2012

DISTRICT #: METRO
IPLOT NAME: 1190i-148tc-stgIB13
PATH & FILENAME: IP_PWP:dl44345\1190i-148tc-stgIB.dgn

PLOTTED/REVISED: 6/14/2012

DISTRICT *: METRO
IPLOT NAME: 1190I-148tc-stg2I
PATH & FILENAME: IP_PWP:d144345\1190I-148tc-stg2.dgn

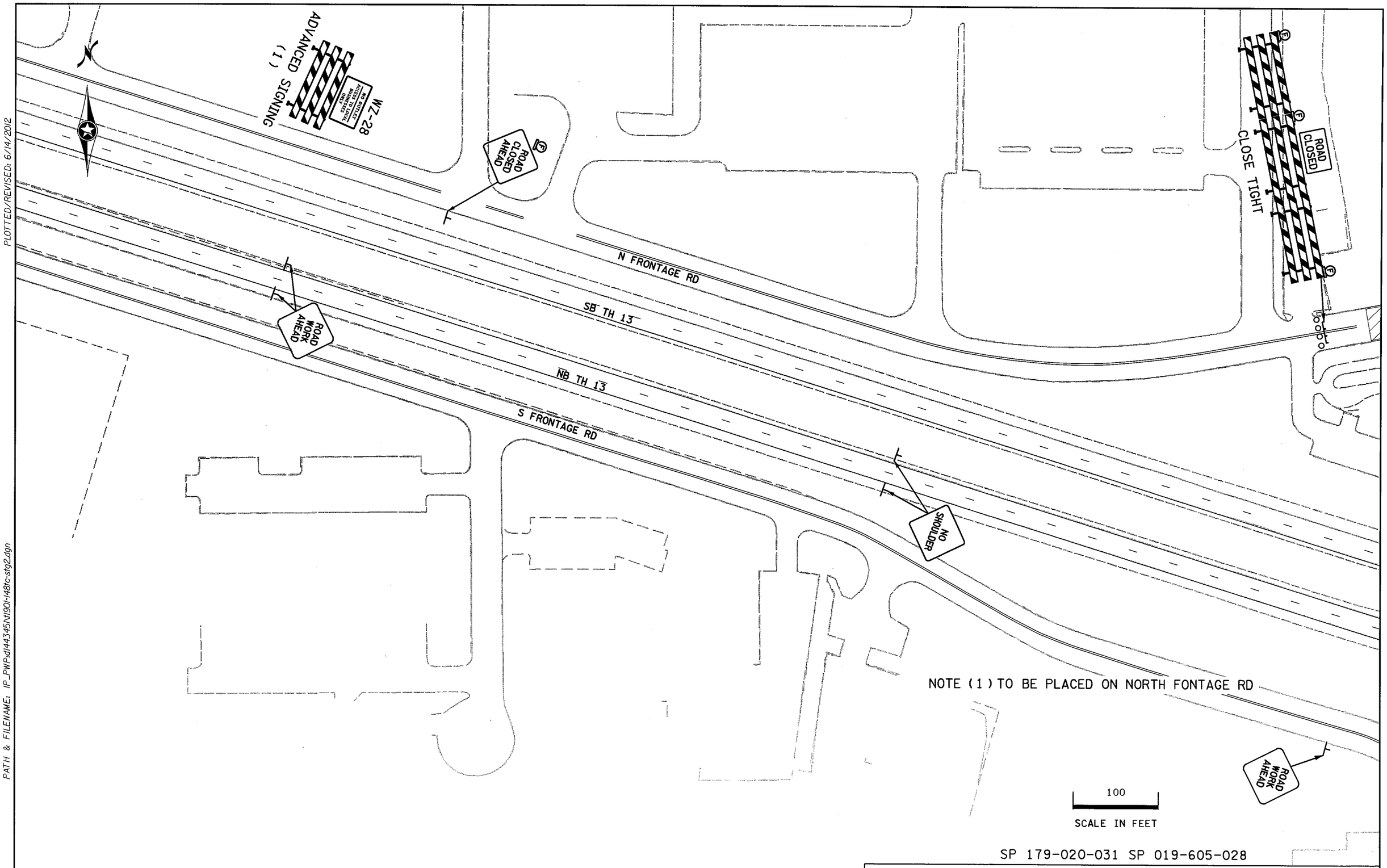

SP 179-020-031 SP 019-605-028

STAGE 2

DRAWN BY: SNM	CHECKED BY: KF	CERTIFIED BY _____ LICENSED PROFESSIONAL ENGINEER	LIC. NO. 40535	DATE 6/14/2012	STATE PROJ. NO. 1901-148 (TH 13)	SHEET NO. TC38	OF TC84 SHEETS

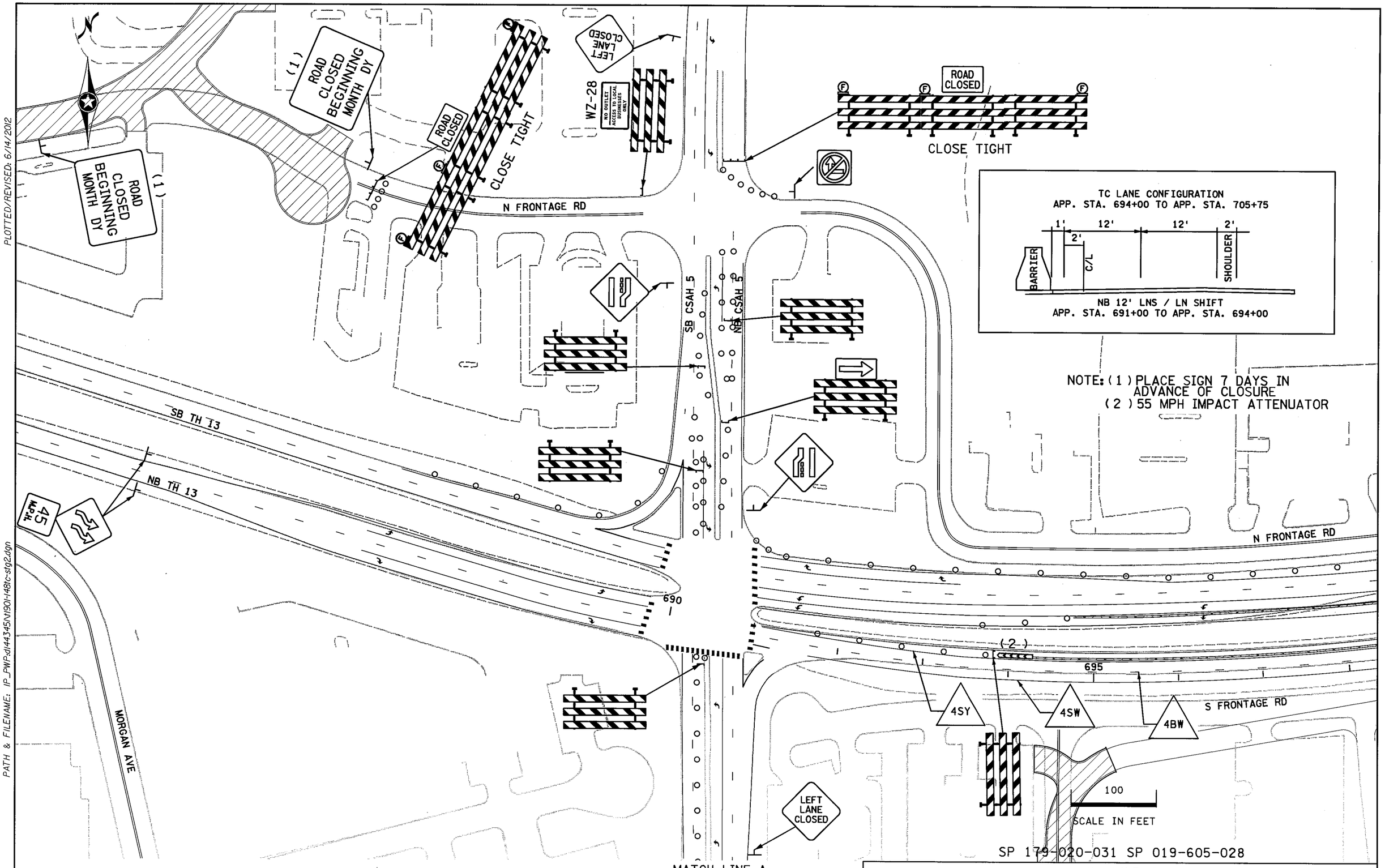

DISTRICT #: METRO
IPLOT NAME: 1190I-148tc-stg22
PATH & FILENAME: IP_PWP:dl443345\1190I-148tc-stg2.dgn

PLOTTED/REVISED: 6/14/2012

DRAWN BY: SNM	CHECKED BY: KF	CERTIFIED BY _____ LICENSED PROFESSIONAL ENGINEER	LIC. NO. 40535	DATE 6/14/2012

STAGE 2

STATE PROJ. NO. 1901-148 (TH 13) SHEET NO. TC39 OF TC84 SHEETS

PLOTTED/REVISED: 6/14/2012

DISTRICT #: METRO
IPLOT NAME: 1190I-148tc-stg23
PATH & FILENAME: IP_PWP:dl443451N1901-148tc-stg2.dgn

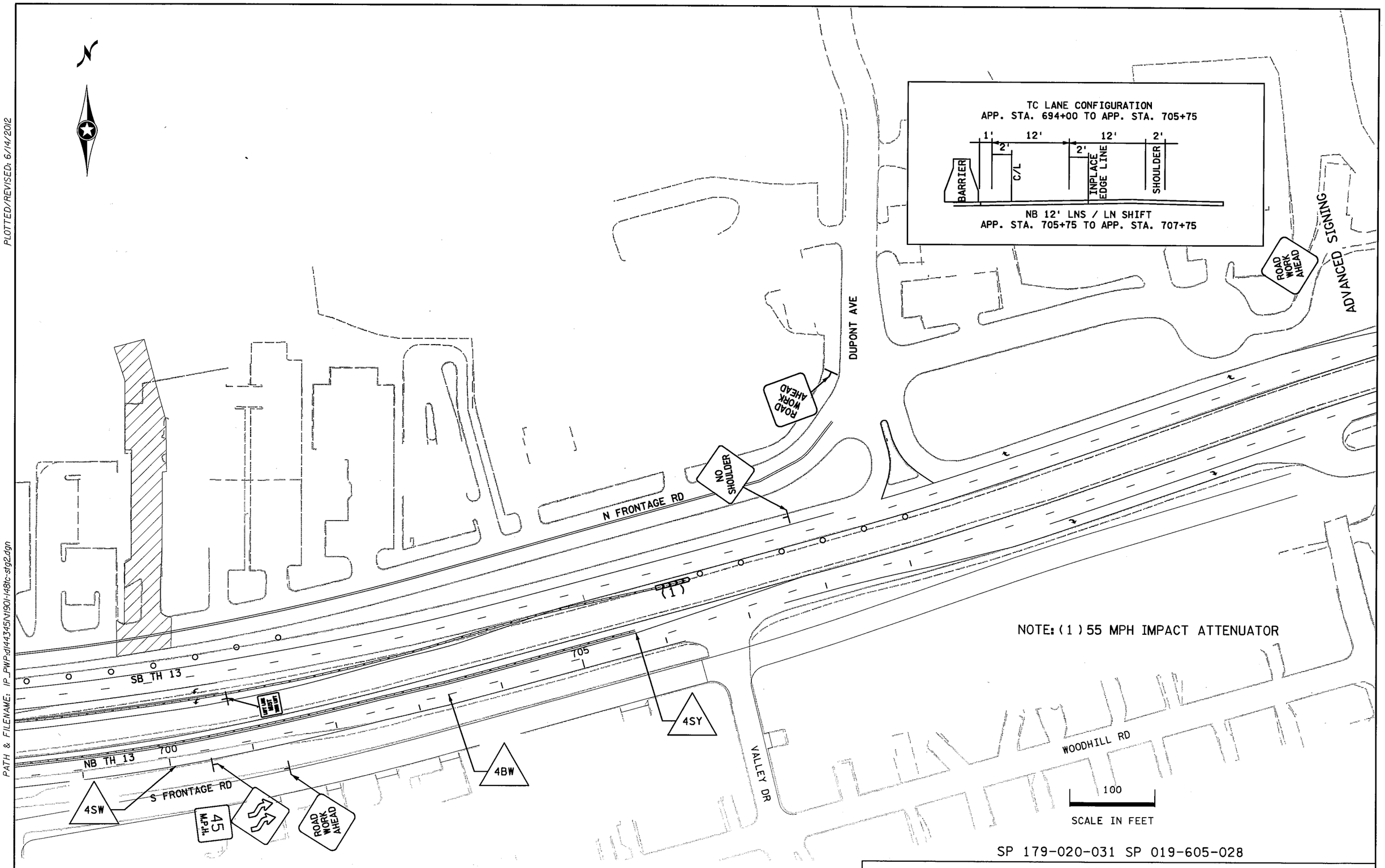

SP 179-020-031 SP 019-605-028

STAGE 2

DRAWN BY: SNM	CHECKED BY: KF	CERTIFIED BY _____ LICENSED PROFESSIONAL ENGINEER	LIC. NO. 40535	DATE 6/14/2012	STATE PROJ. NO. 1901-148 (TH 13)	SHEET NO. TC40	OF TC84 SHEETS

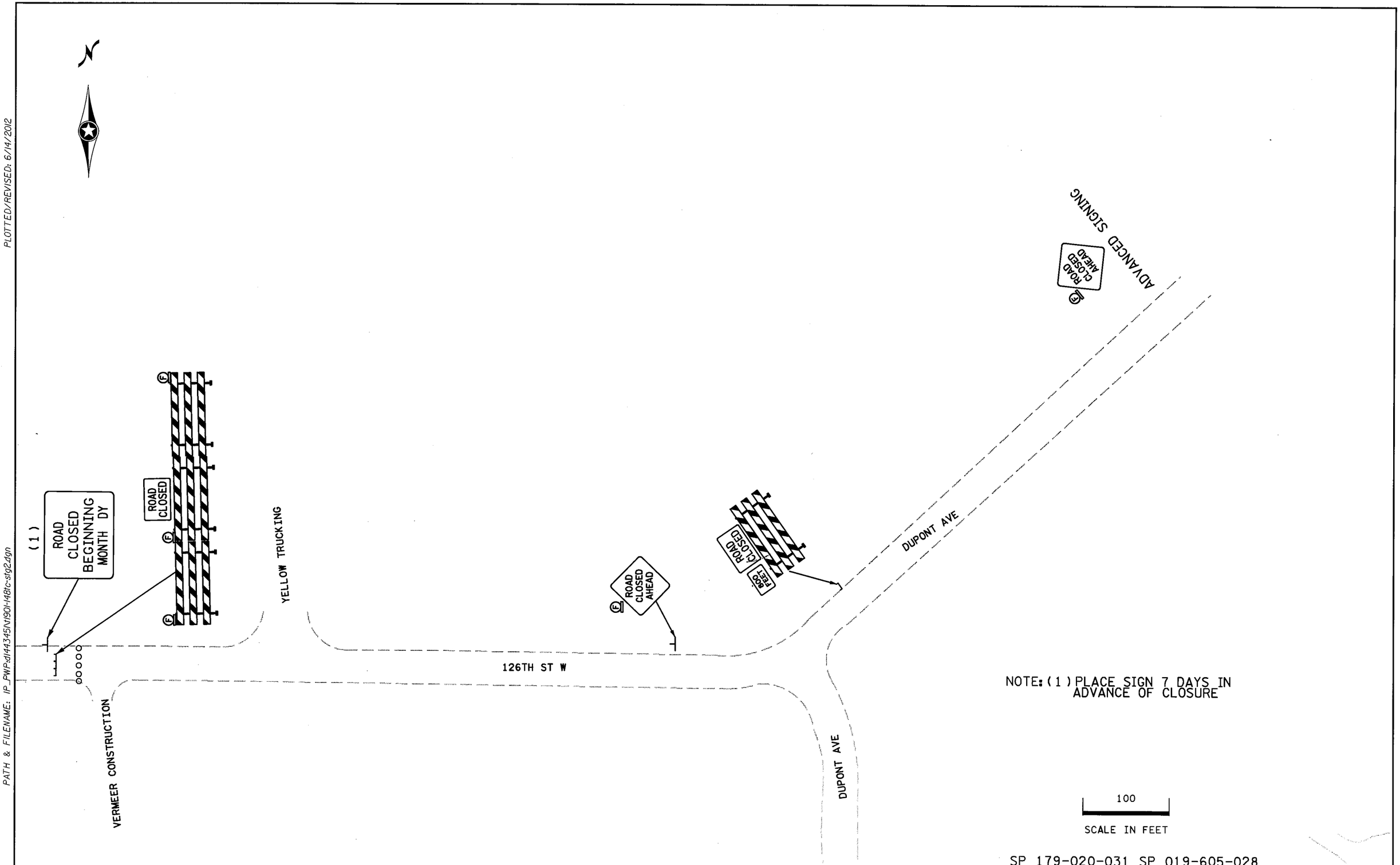

NOTE: (1) PLACE SIGN 7 DAYS IN ADVANCE OF CLOSURE

SP 179-020-031 SP 019-605-028

STAGE 2

DRAWN BY: SNM	CHECKED BY: KF	CERTIFIED BY _____ LICENSED PROFESSIONAL ENGINEER	LIC. NO. 40535	DATE 6/14/2012	STATE PROJ. NO. 1901-148 (TH 13)	SHEET NO. TC41	OF TC84 SHEETS

PLOTTED/REVISED: 6/14/2012

DISTRICT #: METRO
IPLOT NAME: 1190I-148tc-stg24
PATH & FILENAME: IP_PWP:dl44345\1190i-148tc-stg2.dgn

PLOTTED/REVISED: 6/14/2012

DISTRICT #: METRO
IPLOT NAME: t1901-148tc-stg25
PATH & FILENAME: IP_PWP:d144345\t1901-148tc-stg2.dgn

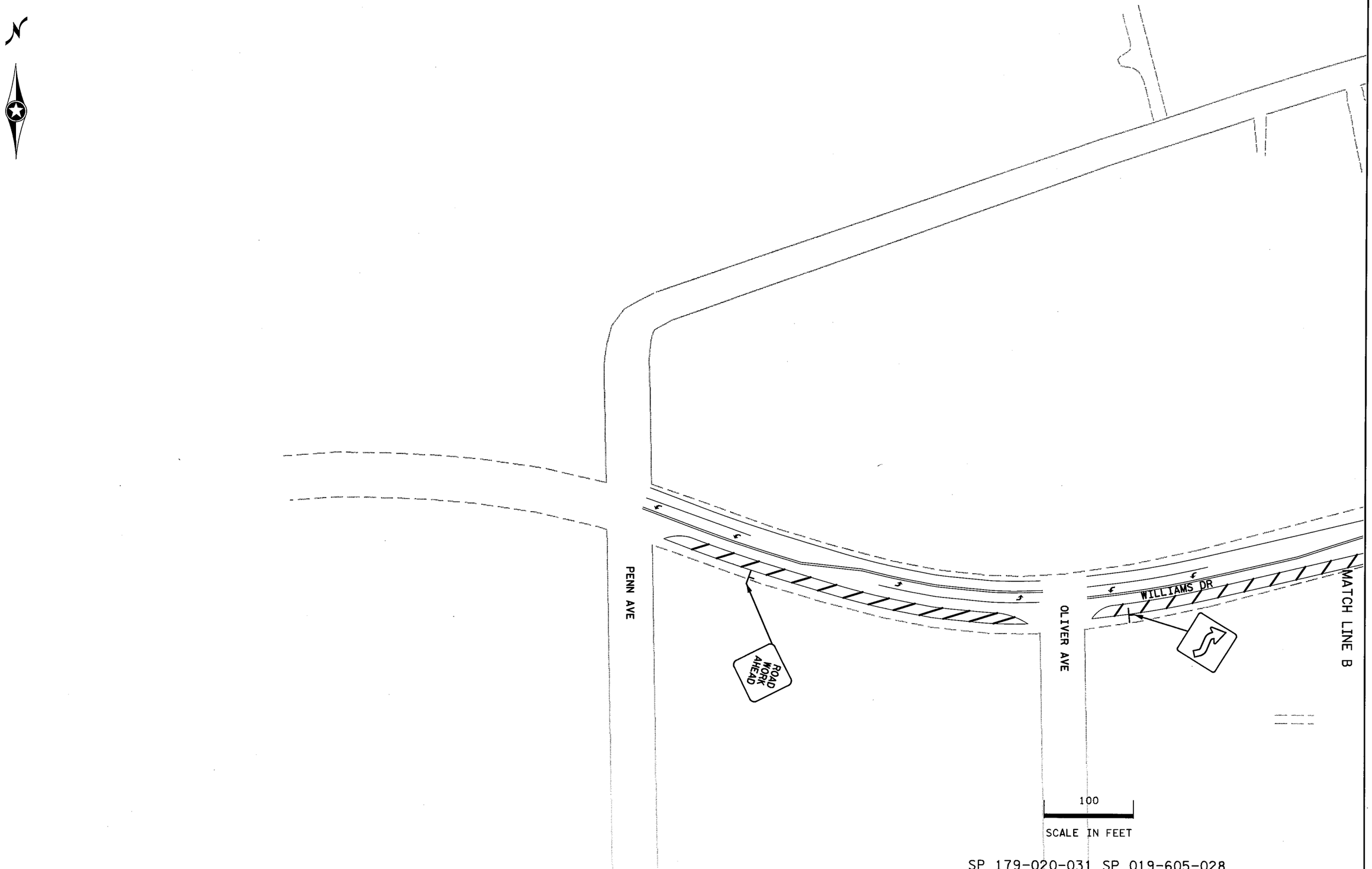

SP 179-020-031 SP 019-605-028

STAGE 2

DRAWN BY: SNM	CHECKED BY: KF	CERTIFIED BY _____ LICENSED PROFESSIONAL ENGINEER	LIC. NO. 40535	DATE 6/14/2012

STATE PROJ. NO. 1901-148 (TH 13) SHEET NO. TC42 OF TC84 SHEETS

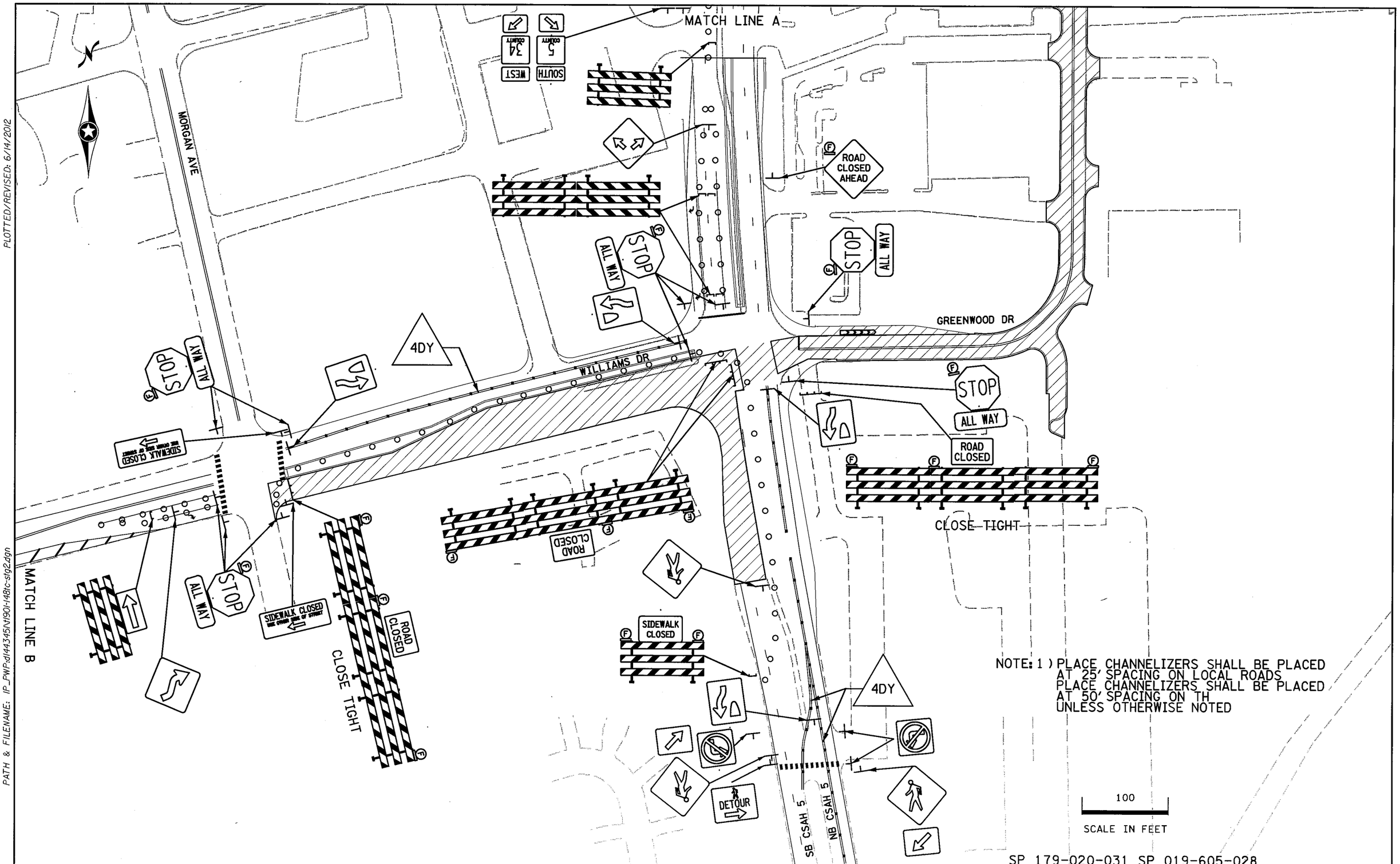

PLOTTED/REVISED: 6/14/2012

DISTRICT #: METRO
IPLOT NAME: 1190I-148tc-stg26
PATH & FILENAME: IP_PWP:dl443450\1190I-148tc-stg2.dgn

STAGE 2

DRAWN BY: SNM	CHECKED BY: KF	CERTIFIED BY _____ LICENSED PROFESSIONAL ENGINEER	LIC. NO. 40535	DATE 6/14/2012	STATE PROJ. NO. 1901-148 (TH 13)	SHEET NO. TC43	OF TC84 SHEETS

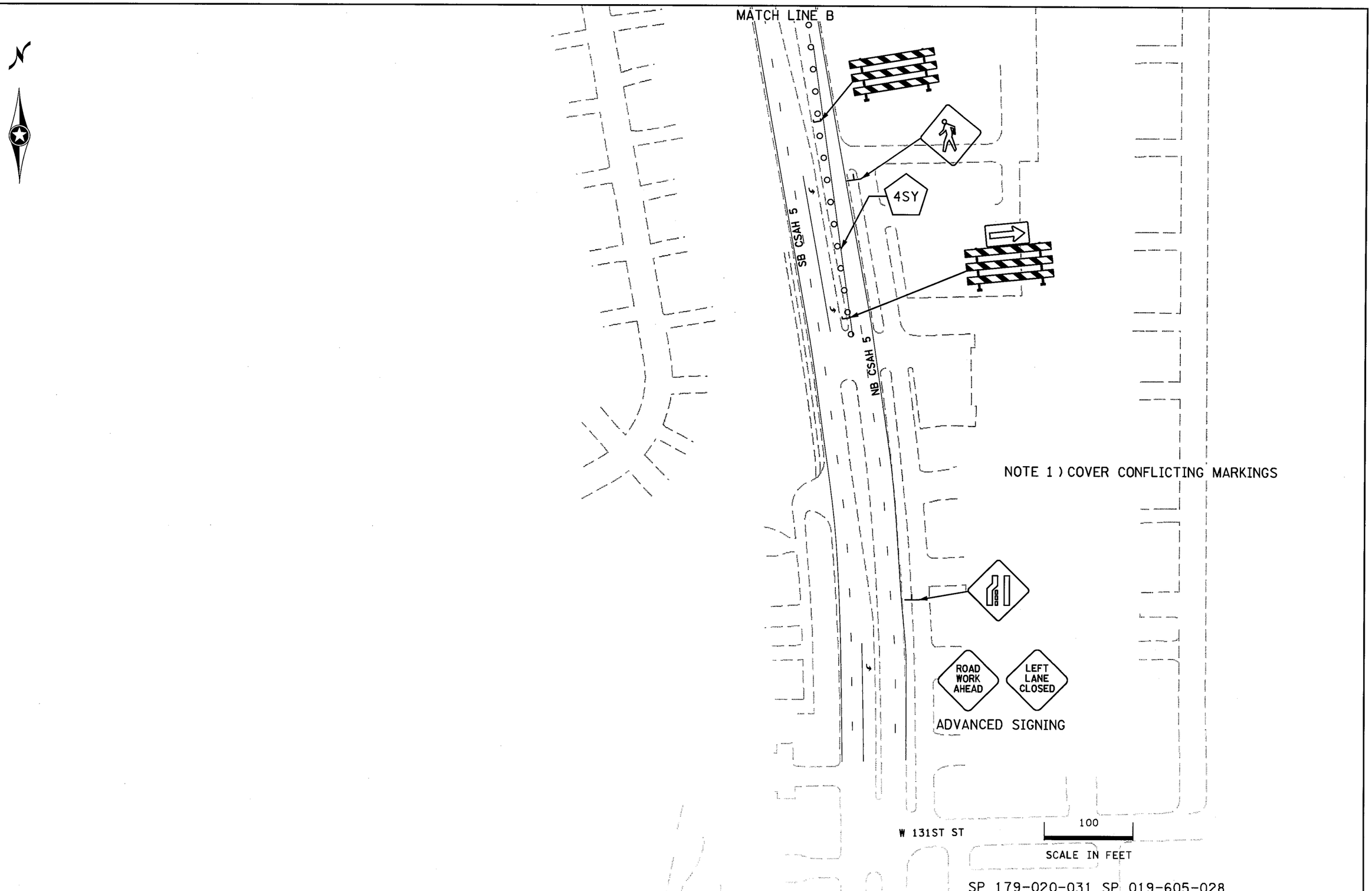

SP 179-020-031 SP 019-605-028

PLOTTED/REVISED: 6/14/2012

DISTRICT *: METRO
IPLOT NAME: t1901-148tc-stg27
PATH & FILENAME: IP_PWP:dl44345\t1901-148tc-stg2.dgn

STAGE 2

DRAWN BY: SNM	CHECKED BY: KF	CERTIFIED BY _____ LICENSED PROFESSIONAL ENGINEER	LIC. NO. 40535	DATE 6/14/2012	STATE PROJ. NO. 1901-148 (TH 13)	SHEET NO. TC44	OF TC84 SHEETS

PLOTTED/REVISED: 6/14/2012

DISTRICT #: METRO
IPLOT NAME: 1190I-148tc-stg3I
PATH & FILENAME: IP_PWP:dl44345\1190I-148tc-stg3.dgn

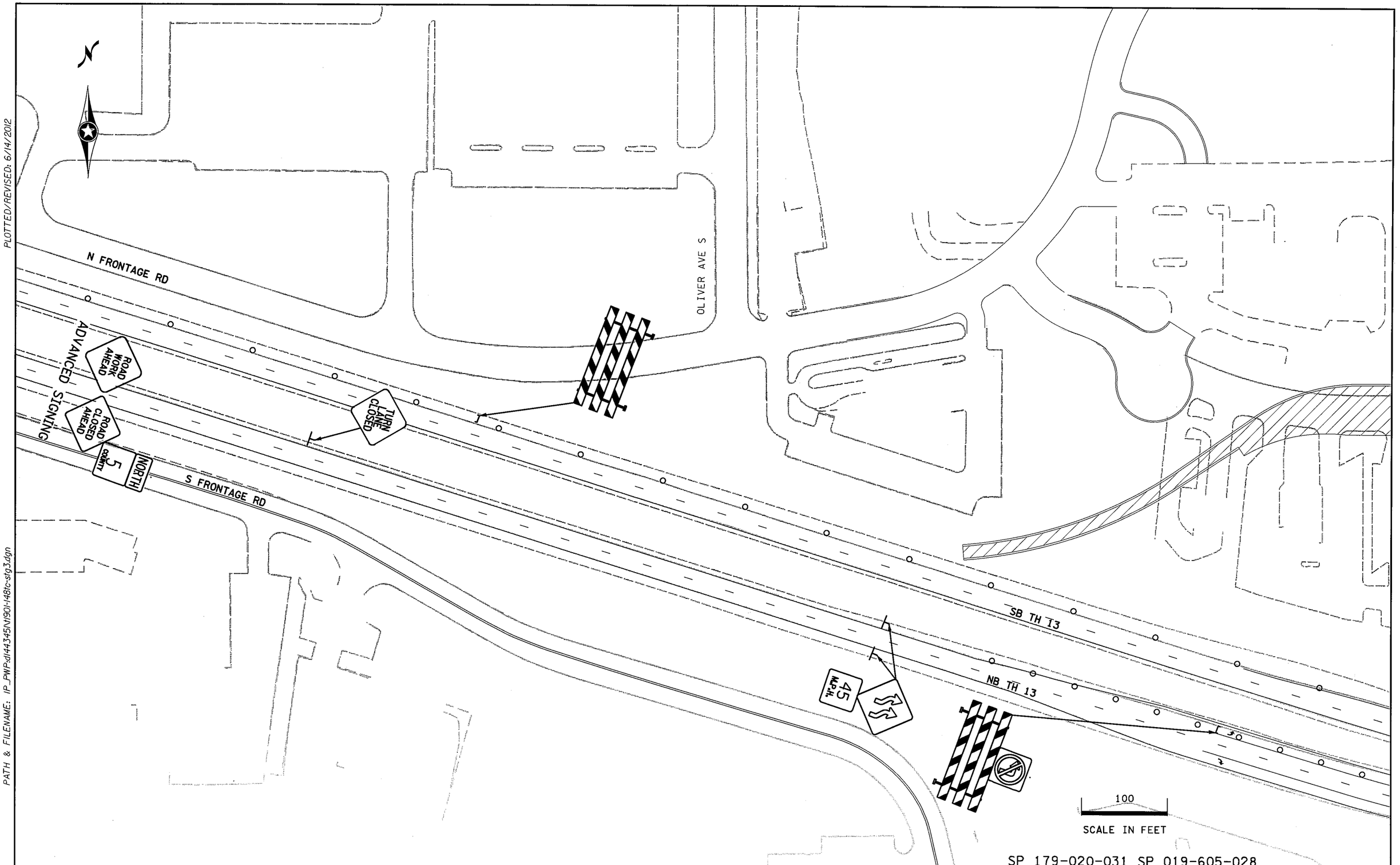

SP 179-020-031 SP 019-605-028

STAGE 3

DRAWN BY: SNM	CHECKED BY: KF	CERTIFIED BY _____ LICENSED PROFESSIONAL ENGINEER	LIC. NO. 40535	DATE 6/14/2012	STATE PROJ. NO. 1901-148 (TH 13)	SHEET NO. TC45	OF TC84 SHEETS

PLOTTED/REVISED: 6/14/2012

DISTRICT #: METRO
IPLOT NAME: 1901-148tc-stg32
PATH & FILENAME: IP_PWP:d144345\1901-148tc-stg3.dgn

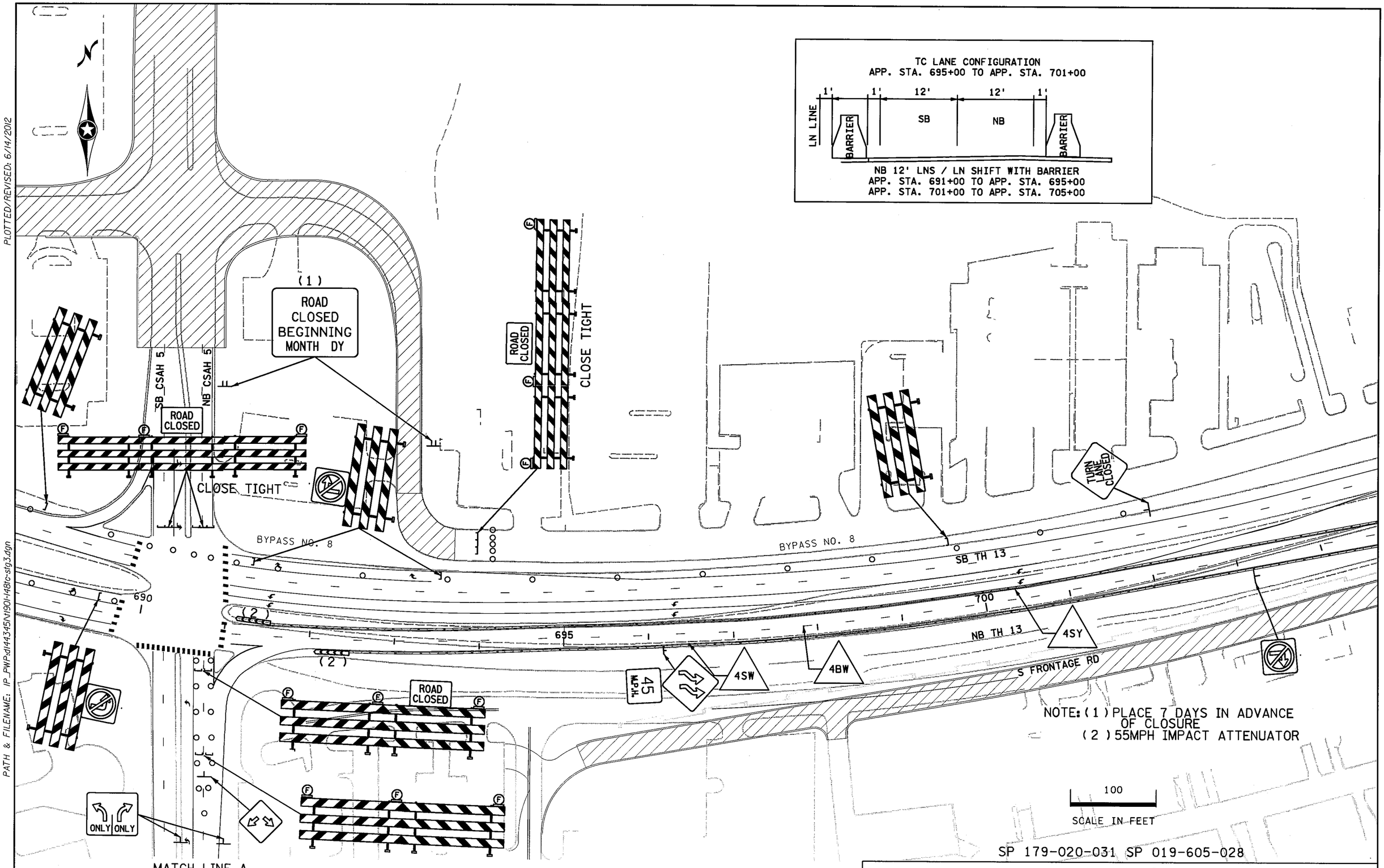

SP 179-020-031 SP 019-605-028

STAGE 3

DRAWN BY: SNM	CHECKED BY: KF	CERTIFIED BY _____ LICENSED PROFESSIONAL ENGINEER	LIC. NO. 40535	DATE 6/14/2012	STATE PROJ. NO. 1901-148 (TH 13)	SHEET NO. TC46	OF TC84 SHEETS

PLOTTED/REVISED: 6/14/2012

DISTRICT #: METRO
IPLOT NAME: t1901-148tc-stg33
PATH & FILENAME: IP_PWP:d144345\N1901-148tc-stg3.dgn

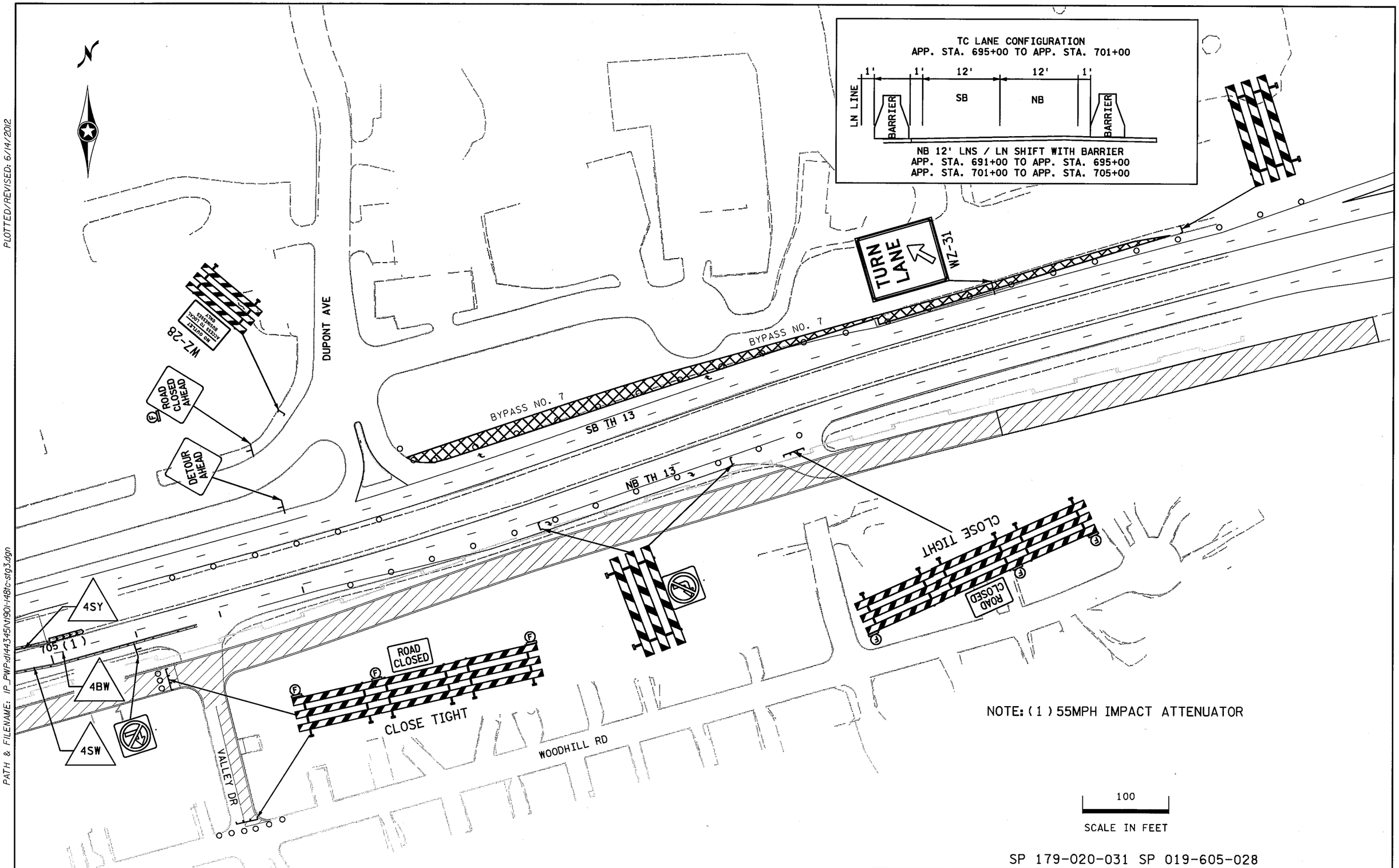

SP 179-020-031 SP 019-605-028

STAGE 3

DRAWN BY: SNM	CHECKED BY: KF	CERTIFIED BY _____ LICENSED PROFESSIONAL ENGINEER	LIC. NO. 40535	DATE 6/14/2012	STATE PROJ. NO. 1901-148 (TH 13)	SHEET NO. TC47	OF TC84 SHEETS

PLOTTED/REVISED: 6/14/2012

DISTRICT #: METRO
IPLOT NAME: 1190I-148tc-stg36
PATH & FILENAME: IP_PWP:dl44345\N190I-148tc-stg3.dgn

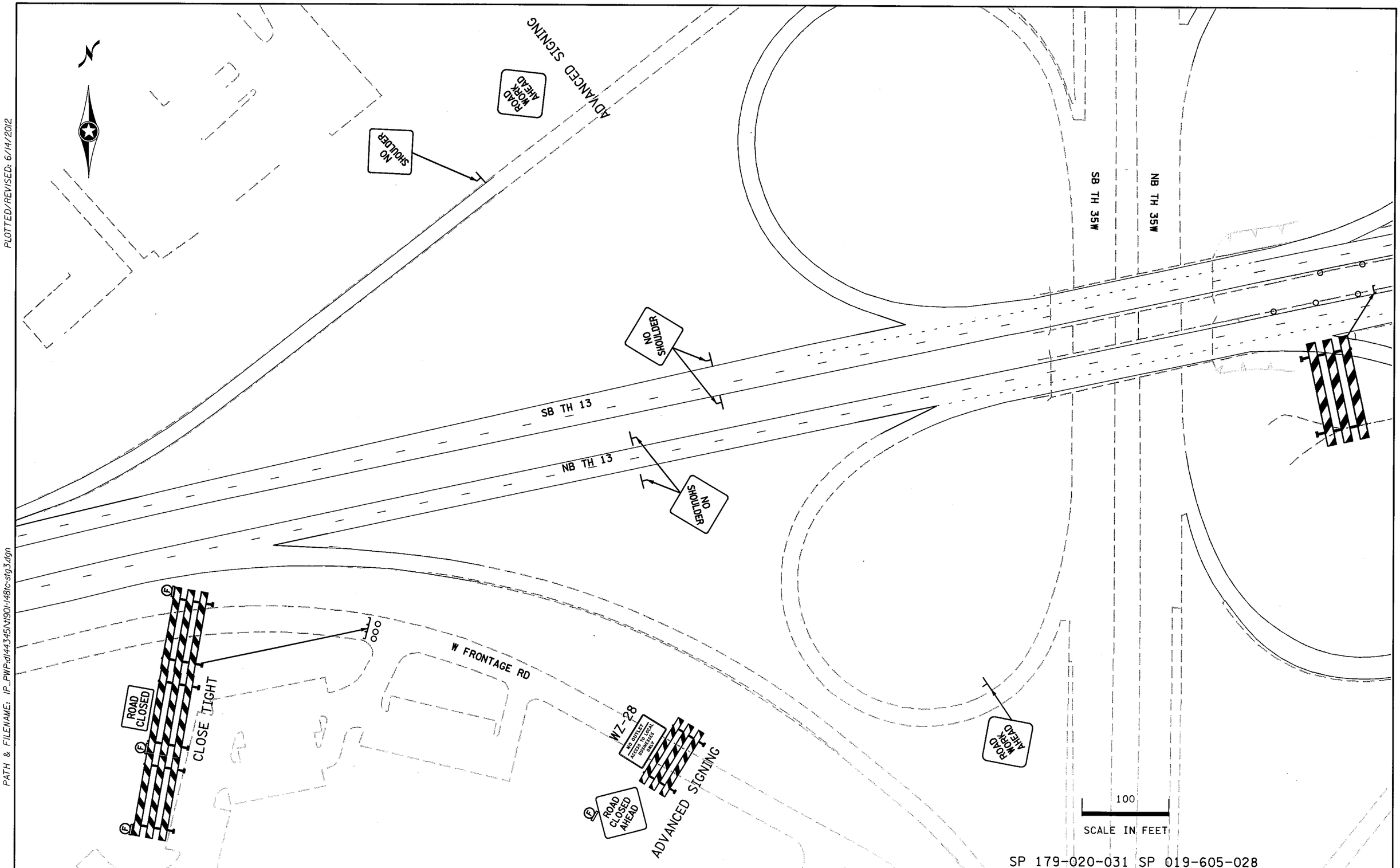

SP 179-020-031 SP 019-605-028

STAGE 3

DRAWN BY: SNM	CHECKED BY: KF	CERTIFIED BY _____ LICENSED PROFESSIONAL ENGINEER	LIC. NO. 40535	DATE 6/14/2012	STATE PROJ. NO. 1901-148 (TH 13)	SHEET NO. TC48	OF TC84 SHEETS

PLOTTED/REVISED: 6/14/2012

DISTRICT #: METRO
IPLOT NAME: 1901-148tc-stg37
PATH & FILENAME: IP_PWP:d144345\t190l-148tc-stg3.dgn

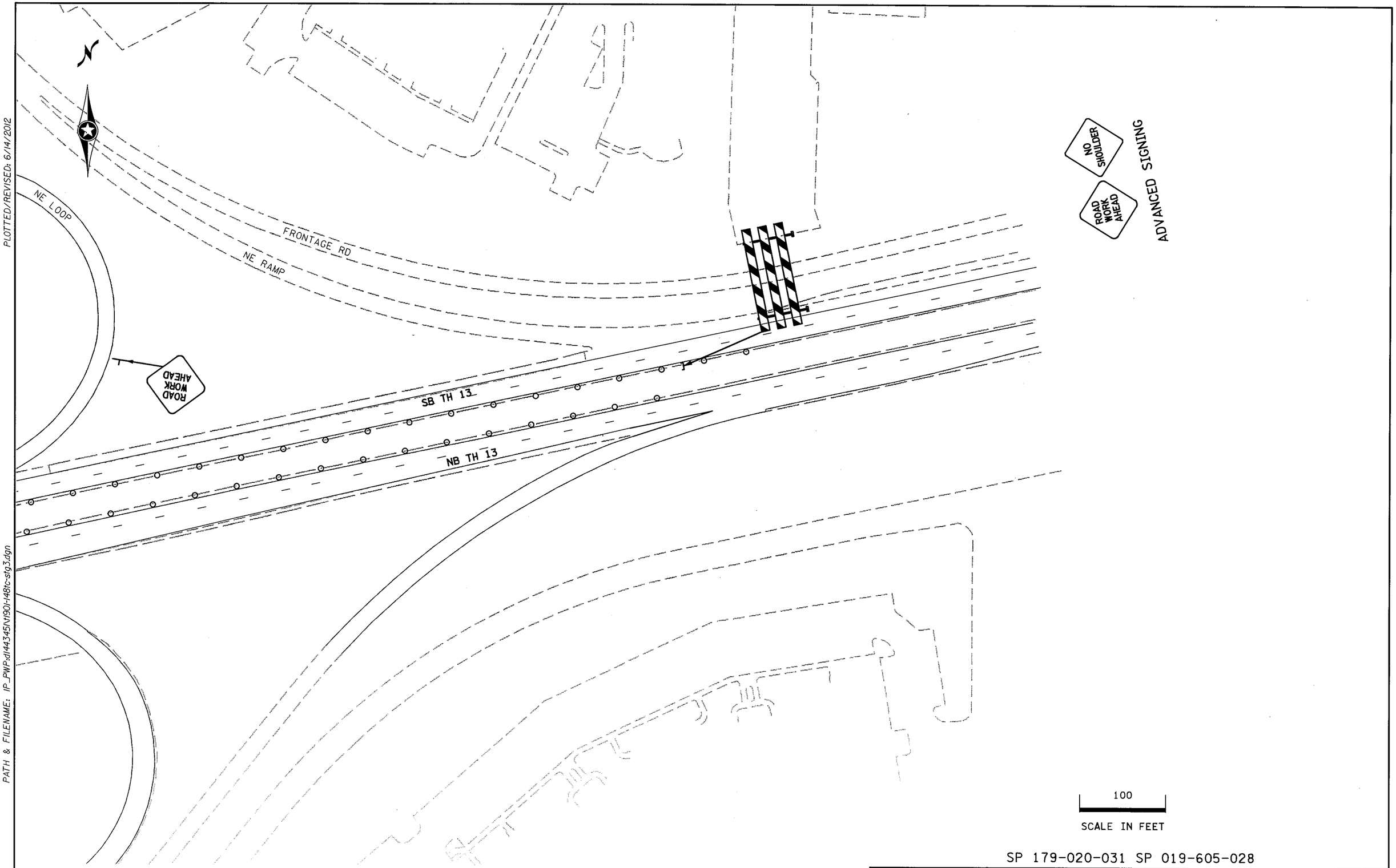

SP 179-020-031 SP 019-605-028

STAGE 3

DRAWN BY: SNM	CHECKED BY: KF	CERTIFIED BY _____ LICENSED PROFESSIONAL ENGINEER	LIC. NO. 40535	DATE 6/14/2012	STATE PROJ. NO. 1901-148 (TH 13)	SHEET NO. TC49	OF TC84 SHEETS

PLOTTED/REVISED: 6/14/2012

DISTRICT #: METRO
IPLOT NAME: 1190I-148tc-stg34
PATH & FILENAME: IP_PWP:dl44345\1190I-148tc-stg3.dgn

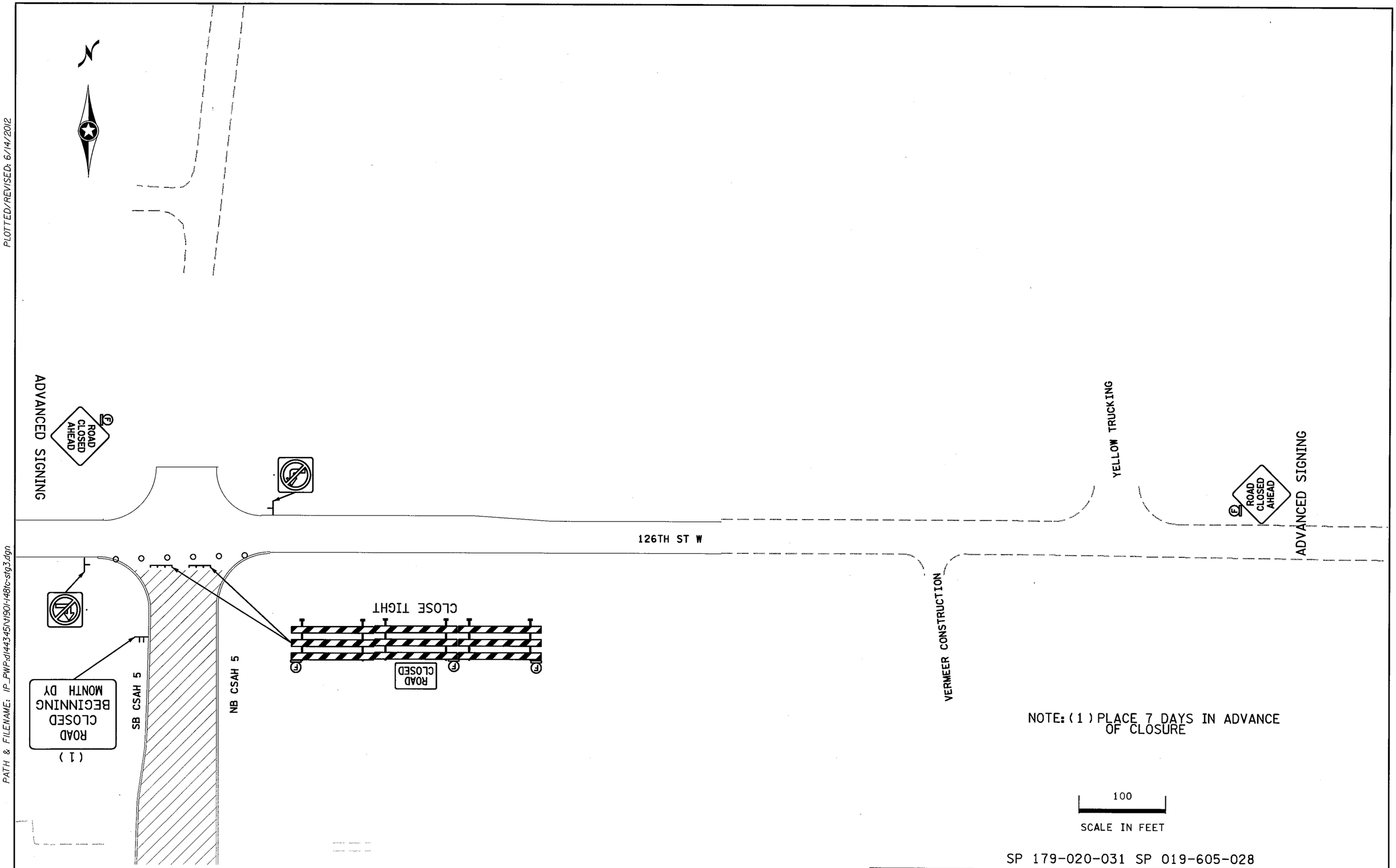

NOTE: (1) PLACE 7 DAYS IN ADVANCE OF CLOSURE

SP 179-020-031 SP 019-605-028

STAGE 3

DRAWN BY: SNM	CHECKED BY: KF	CERTIFIED BY _____ LICENSED PROFESSIONAL ENGINEER	LIC. NO. 40535	DATE 6/14/2012	STATE PROJ. NO. 1901-148 (TH 13)	SHEET NO. TC50	OF TC84 SHEETS

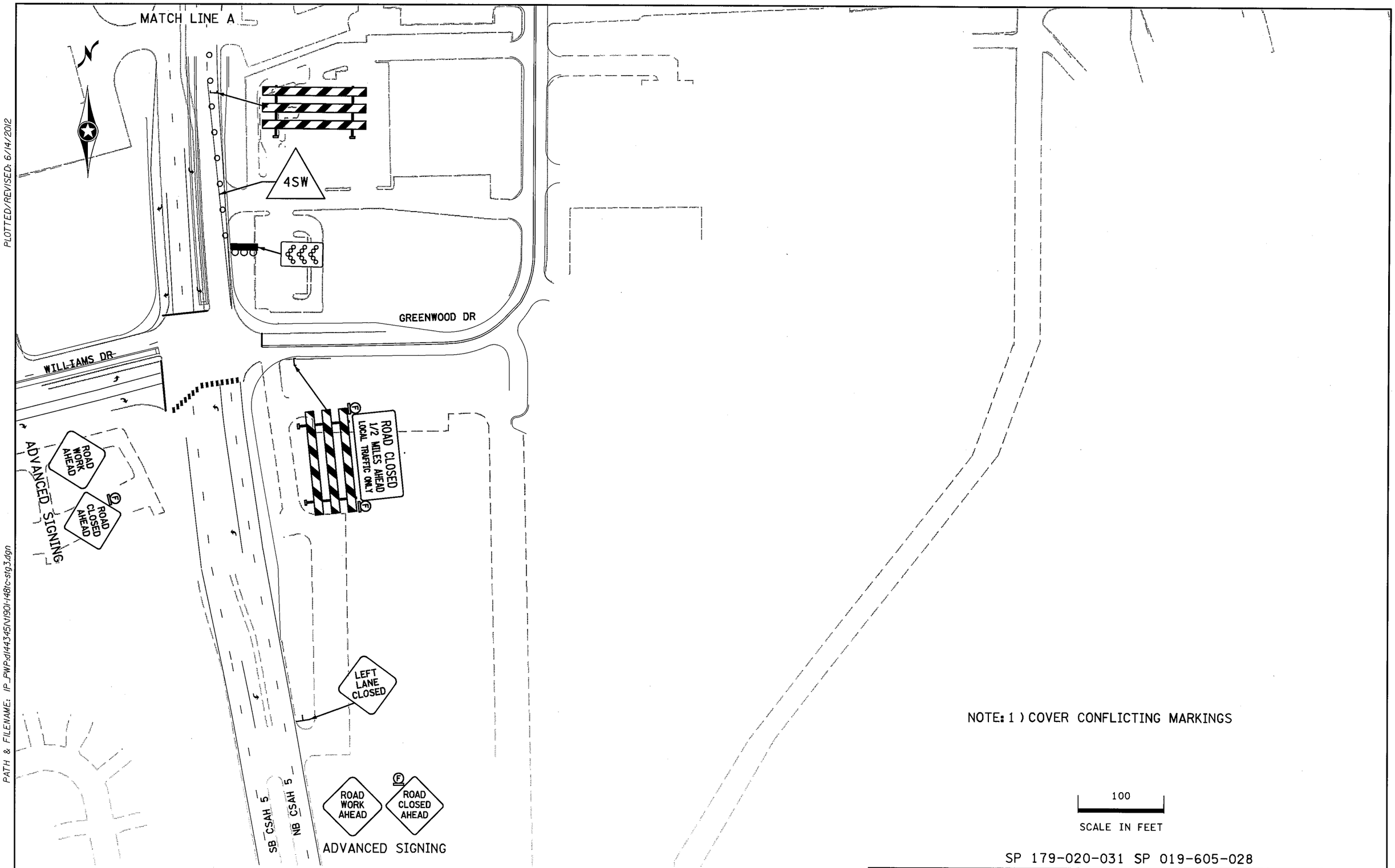

NOTE: 1) COVER CONFLICTING MARKINGS

SP 179-020-031 SP 019-605-028

STAGE 3

DRAWN BY: SNM	CHECKED BY: KF	CERTIFIED BY _____ LICENSED PROFESSIONAL ENGINEER	LIC. NO. 40535	DATE 6/14/2012	STATE PROJ. NO. 1901-148 (TH 13)	SHEET NO. TC51	OF TC84 SHEETS

PLOTTED/REVISED: 6/14/2012

DISTRICT #: METRO
IPLOT NAME: 1190I-148tc-stg35
PATH & FILENAME: IP_PWP:dl44345\1190I-148tc-stg3.dgn

PLOTTED/REVISED: 6/14/2012

DISTRICT #: METRO
IPLOT NAME: t190i-148tc-stg4i
PATH & FILENAME: IP_PWP:dl44345\N190i-148tc-stg4.dgn

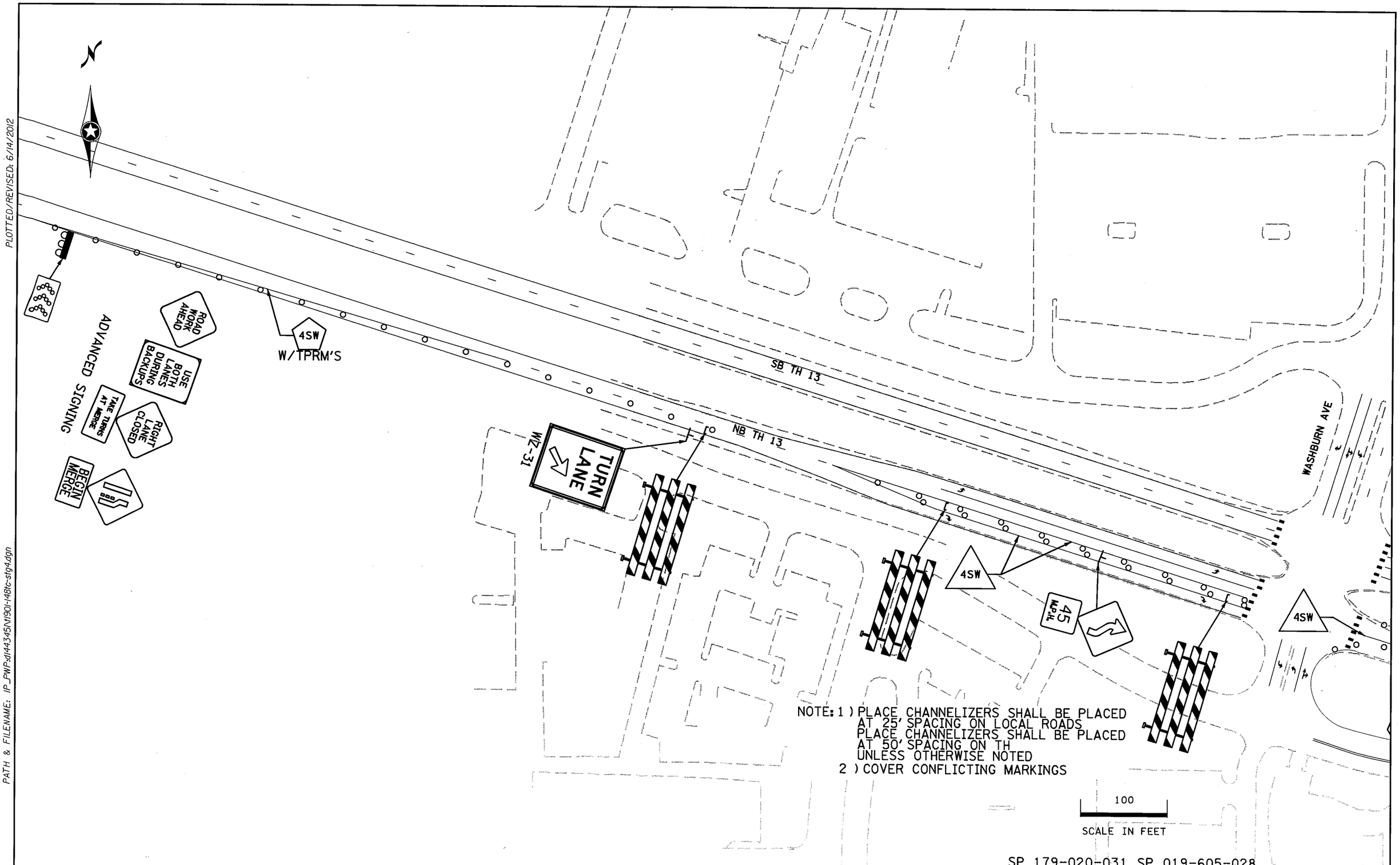

SP 179-020-031 SP 019-605-028

STAGE 4

DRAWN BY: SNM	CHECKED BY: KF	CERTIFIED BY _____ LICENSED PROFESSIONAL ENGINEER	LIC. NO. 40535	DATE 6/14/2012	STATE PROJ. NO. 1901-148 (TH 13)	SHEET NO. TC52	OF TC84 SHEETS

PLOTTED/REVISED: 6/14/2012

DISTRICT #: METRO
IPLOT NAME: 1190I-148tc-stg42
PATH & FILENAME: IP_PWP:dl443345\1190I-148tc-stg4.dgn

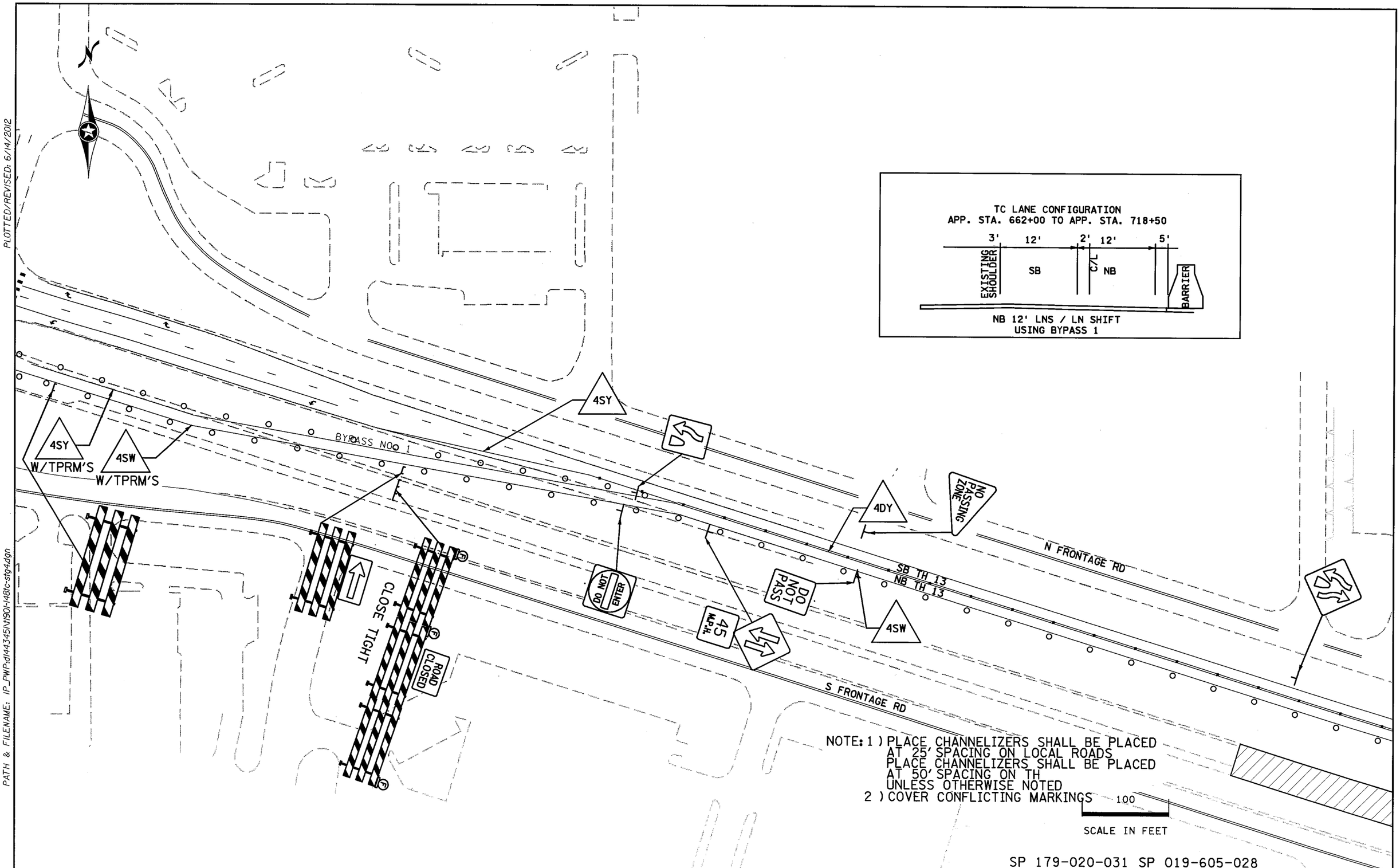

SP 179-020-031 SP 019-605-028

STAGE 4

DRAWN BY: SNM	CHECKED BY: KF	CERTIFIED BY _____ LICENSED PROFESSIONAL ENGINEER	LIC. NO. 40535	DATE 6/14/2012	STATE PROJ. NO. 1901-148 (TH 13)	SHEET NO. TC53	OF TC84 SHEETS

PLOTTED/REVISED: 6/14/2012

DISTRICT #: METRO
IPLOT NAME: 1901-148tc-stg43
PATH & FILENAME: IP_PWP:dl44345\1901-148tc-stg4.dgn

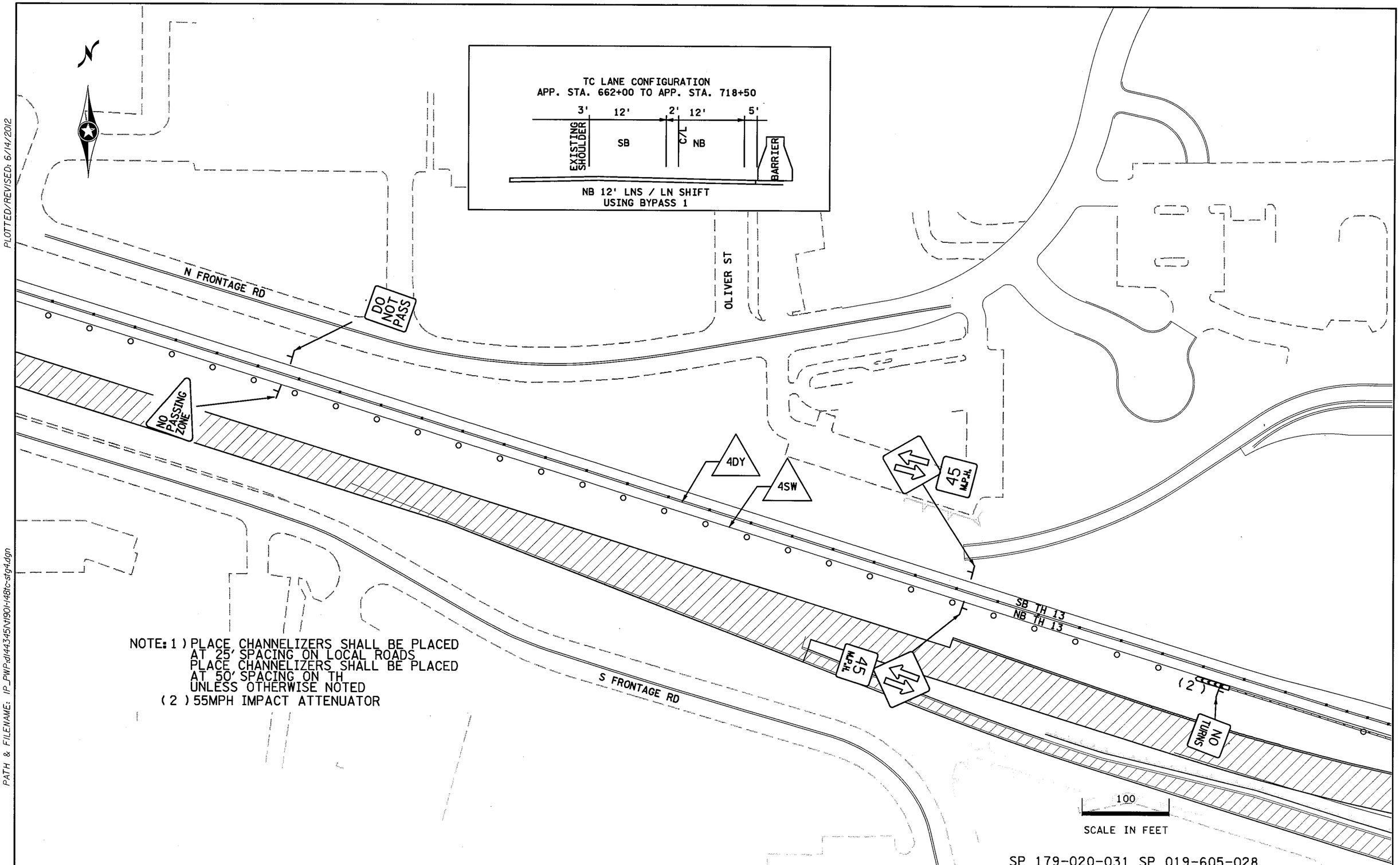

NOTE: 1) PLACE CHANNELIZERS SHALL BE PLACED AT 25' SPACING ON LOCAL ROADS
PLACE CHANNELIZERS SHALL BE PLACED AT 50' SPACING ON TH
UNLESS OTHERWISE NOTED
(2) 55MPH IMPACT ATTENUATOR

SP 179-020-031 SP 019-605-028

STAGE 4

DRAWN BY: SNM	CHECKED BY: KF	CERTIFIED BY _____ LICENSED PROFESSIONAL ENGINEER	LIC. NO. 40535	DATE 6/14/2012	STATE PROJ. NO. 1901-148 (TH 13)	SHEET NO. TC54	OF TC84 SHEETS

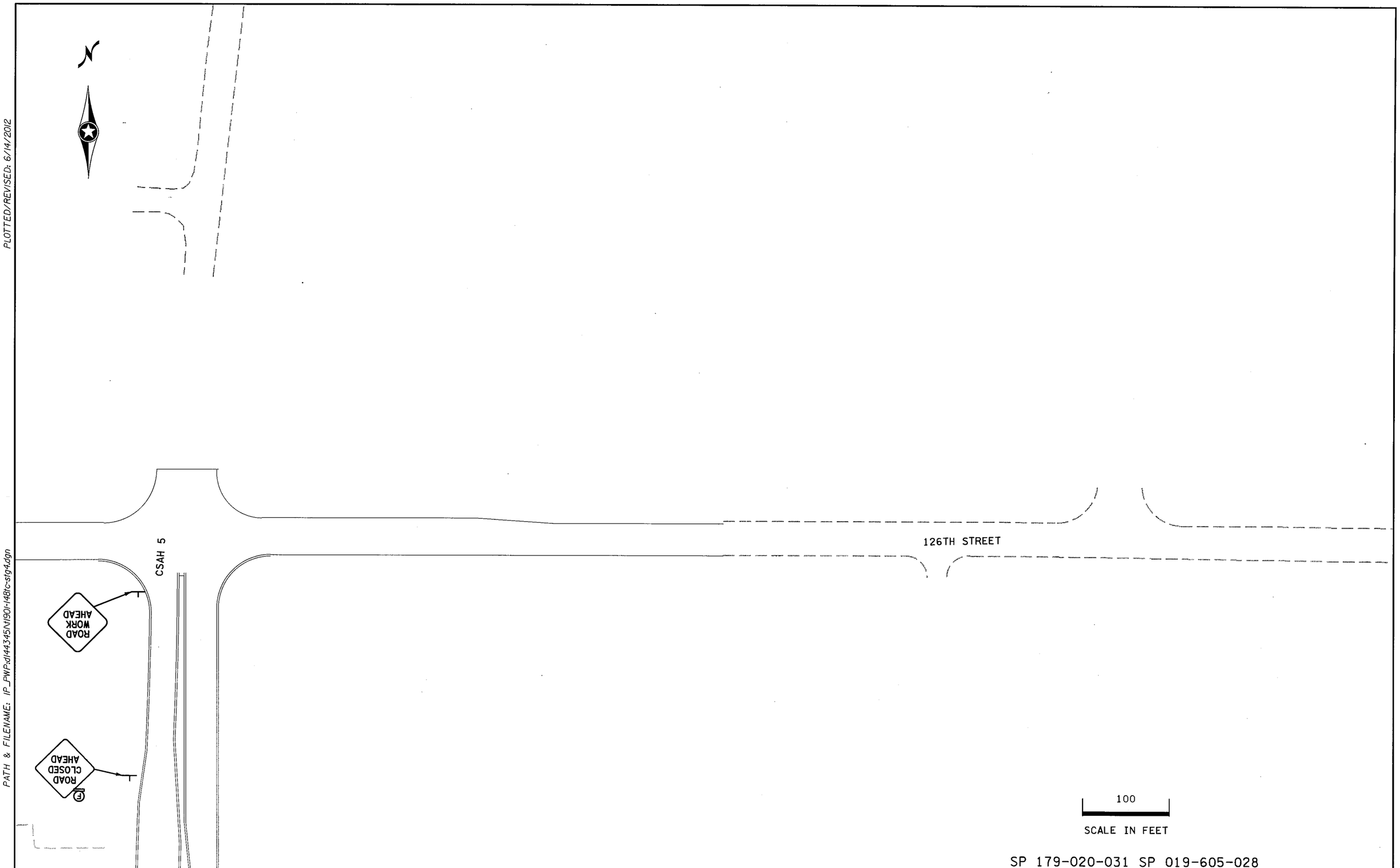

SP 179-020-031 SP 019-605-028

STAGE 4

DRAWN BY: SNM	CHECKED BY: KF	CERTIFIED BY _____ LICENSED PROFESSIONAL ENGINEER	LIC. NO. 40535	DATE 6/14/2012	STATE PROJ. NO. 1901-148 (TH 13)	SHEET NO. TC55	OF TC84 SHEETS

DISTRICT #: METRO
IPLOT NAME: t1901-148tc-stg44
PATH & FILENAME: IP_PWP:d144345\t1901-148tc-stg4.dgn
PLOTTED/REVISED: 6/14/2012

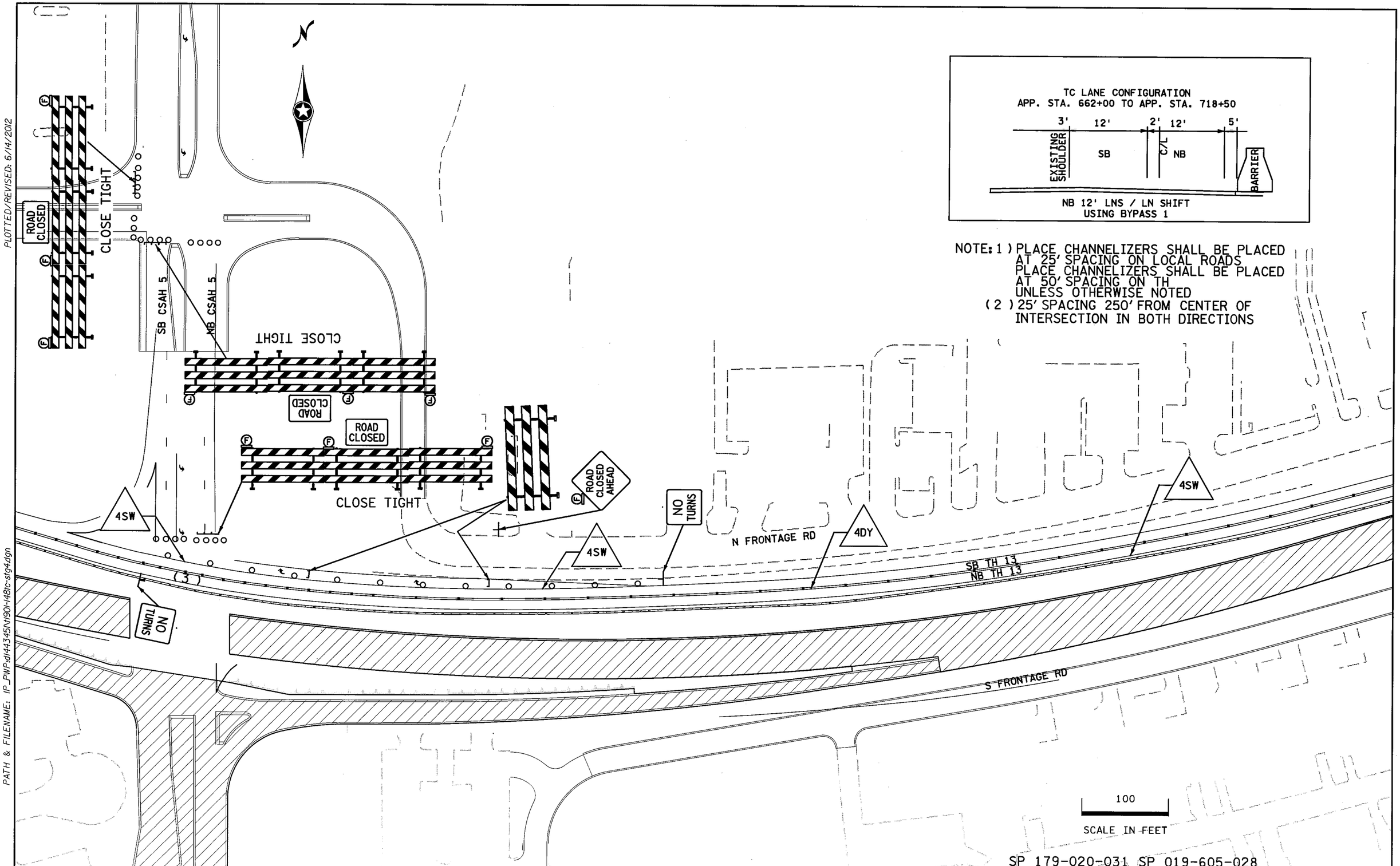

SP 179-020-031 SP 019-605-028

STAGE 4

DRAWN BY: SNM	CHECKED BY: KF	CERTIFIED BY [signature] LICENSED PROFESSIONAL ENGINEER	LIC. NO. 40535	DATE 6/14/2012	STATE PROJ. NO. 1901-148 (TH 13)	SHEET NO. TC56	OF TC84 SHEETS

PLOTTED/REVISED: 6/14/2012

DISTRICT #: METRO
IPLOT NAME: t1901-148tc-stg45
PATH & FILENAME: IP_PWP:d144345\t1901-148tc-stg4.dgn

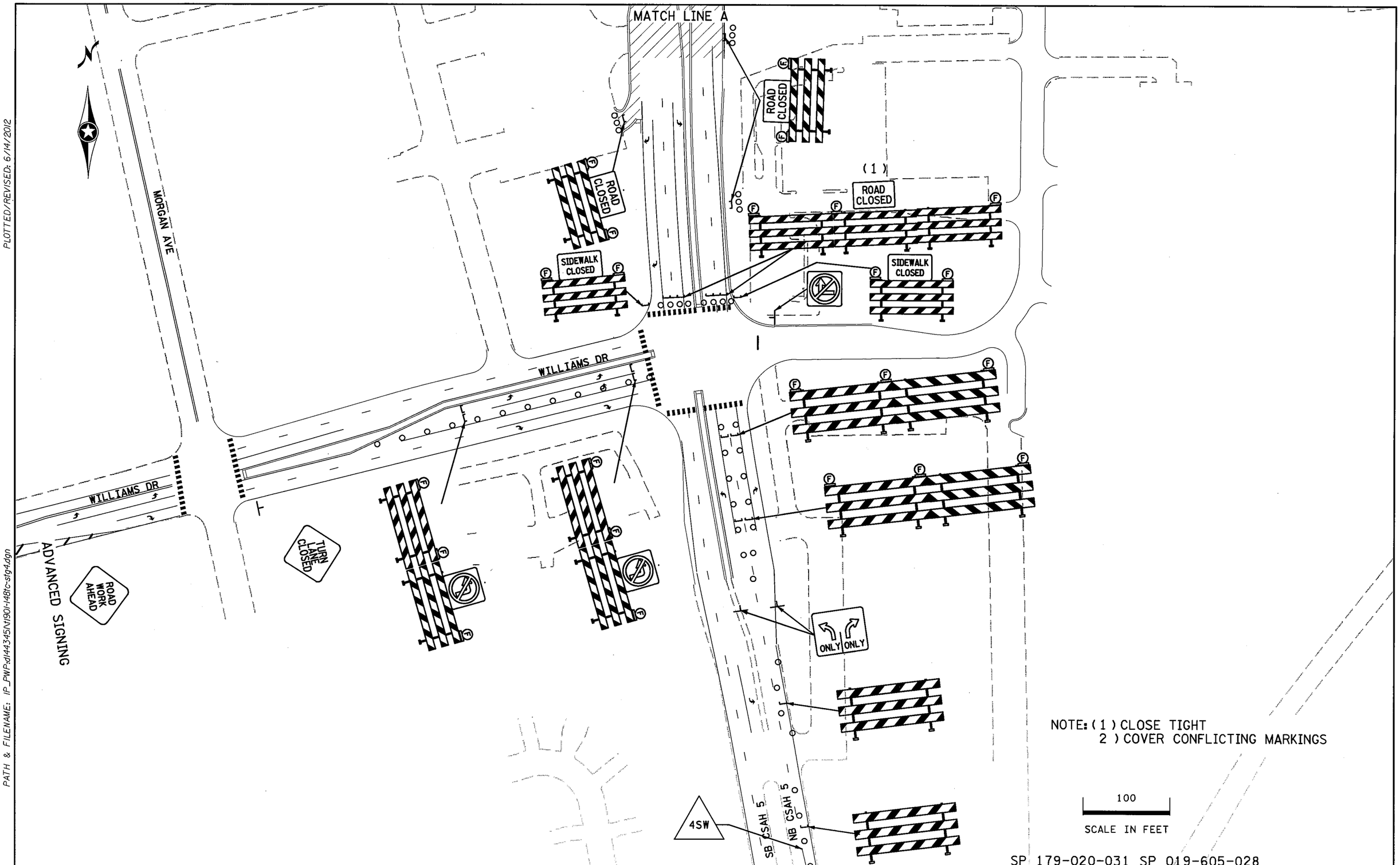

SP 179-020-031 SP 019-605-028

STAGE 4

DRAWN BY: SNM	CHECKED BY: KF	CERTIFIED BY _____ LICENSED PROFESSIONAL ENGINEER	LIC. NO. 40535	DATE 6/14/2012	STATE PROJ. NO. 1901-148 (TH 13)	SHEET NO. TC57	OF TC84 SHEETS

PLOTTED/REVISED: 6/14/2012

DISTRICT #: METRO
IPLOT NAME: 1190I-148tc-stg46
PATH & FILENAME: IP_PWP:d/443451N/190I-148tc-stg4.dgn

PLOTTED/REVISED: 6/14/2012

DISTRICT #: METRO
IPLOT NAME: 1190I-148tc-stg47
PATH & FILENAME: IP_PWP-dl44345\N190I-148tc-stg4.dgn

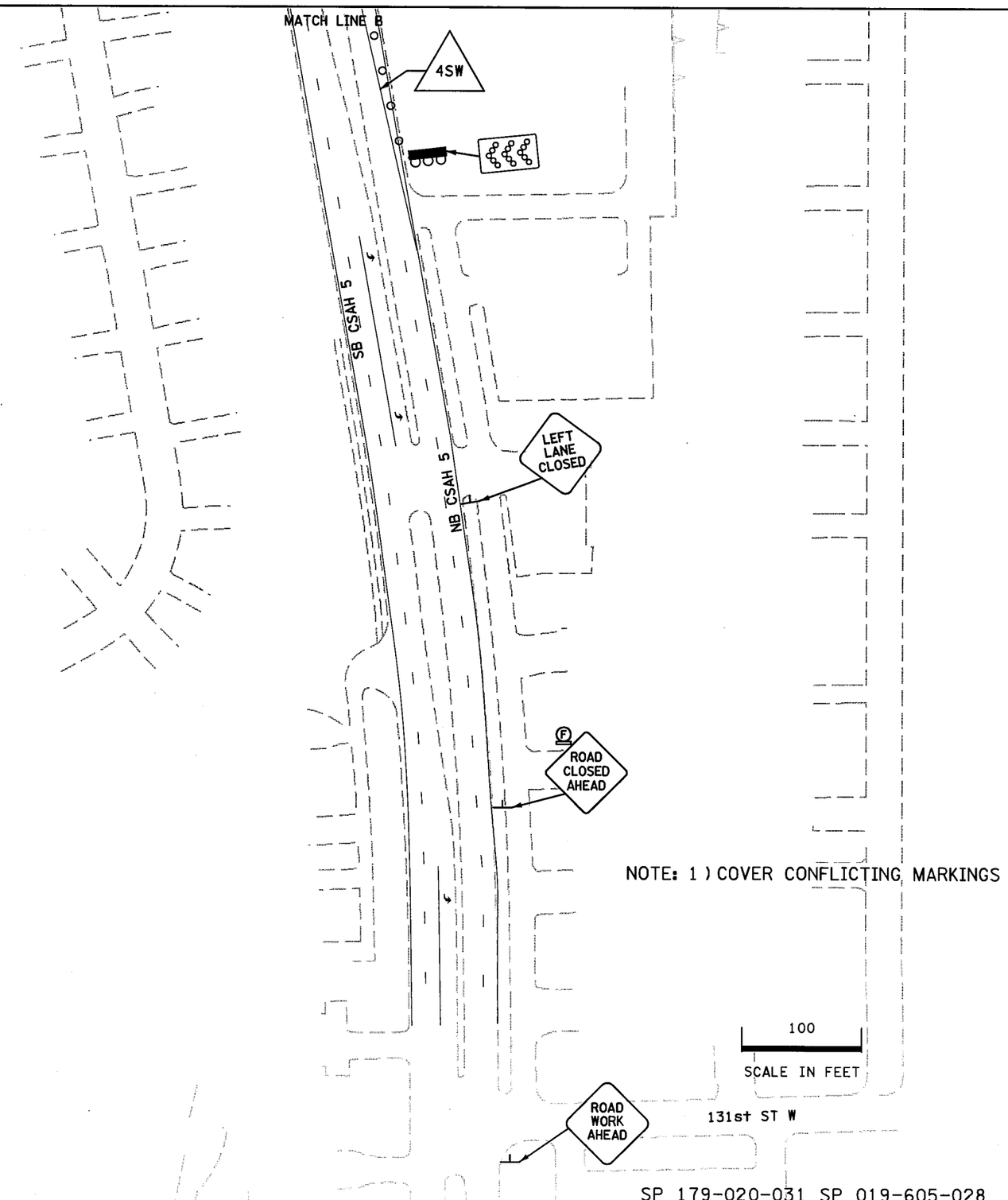

SP 179-020-031 SP 019-605-028

STAGE 4

DRAWN BY: SNM	CHECKED BY: KF	CERTIFIED BY _____ LICENSED PROFESSIONAL ENGINEER	LIC. NO. 40535	DATE 6/14/2012	STATE PROJ. NO. 1901-148 (TH 13)	SHEET NO. TC58	OF TC84 SHEETS

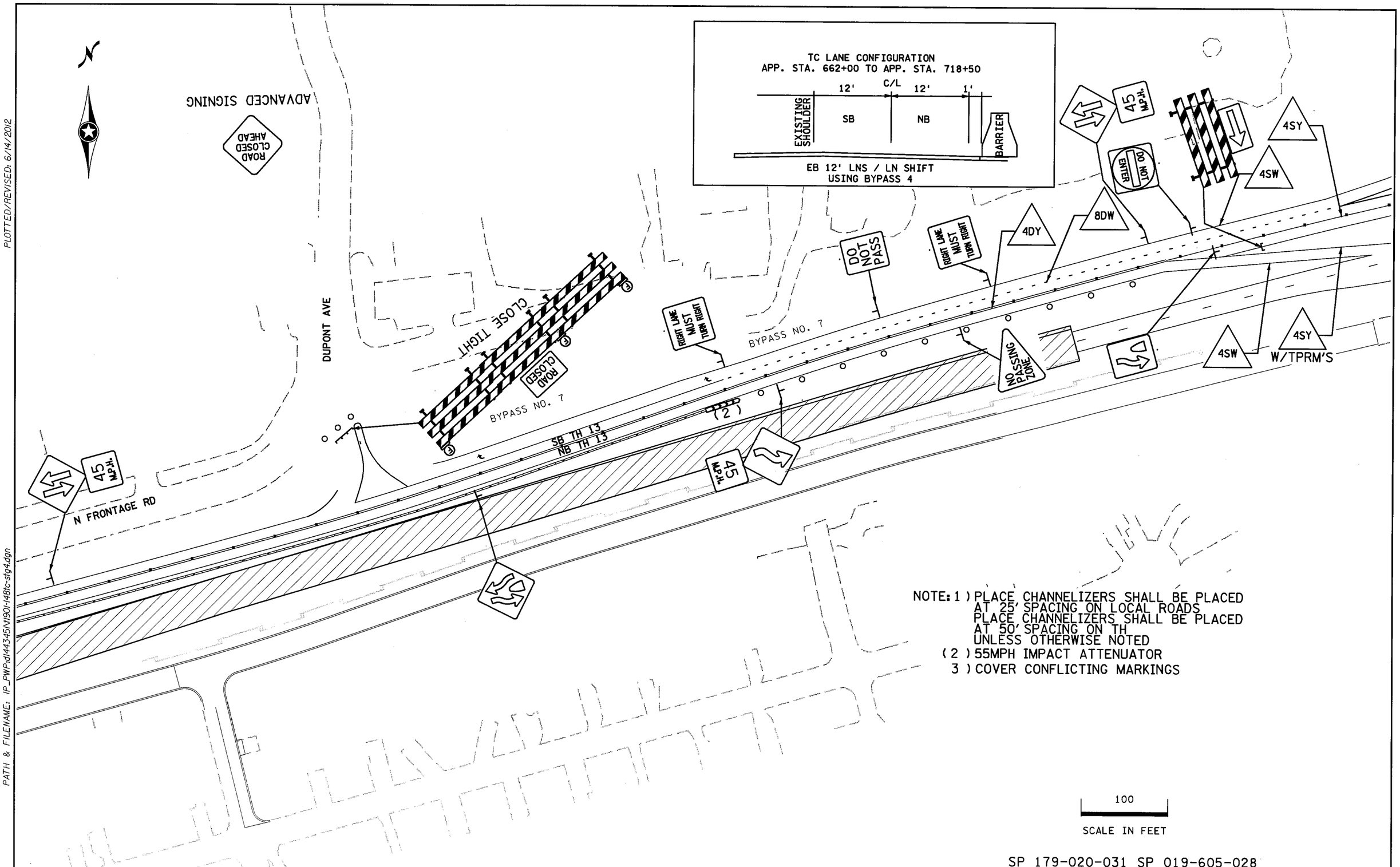

NOTE: 1) PLACE CHANNELIZERS SHALL BE PLACED AT 25' SPACING ON LOCAL ROADS
PLACE CHANNELIZERS SHALL BE PLACED AT 50' SPACING ON TH
UNLESS OTHERWISE NOTED
(2) 55MPH IMPACT ATTENUATOR
3) COVER CONFLICTING MARKINGS

100
SCALE IN FEET

SP 179-020-031 SP 019-605-028

STAGE 4

DRAWN BY: SNM	CHECKED BY: KF	CERTIFIED BY [signature] LICENSED PROFESSIONAL ENGINEER	LIC. NO. 40535	DATE 6/14/2012	STATE PROJ. NO. 1901-148 (TH 13)	SHEET NO. TC59	OF TC84 SHEETS

PLOTTED/REVISED: 6/14/2012

DISTRICT #: METRO
IPLOT NAME: t1901-148tc-stg48
PATH & FILENAME: IP_PWP:d144345\t1901-148tc-stg4.dgn

PLOTTED/REVISED: 6/14/2012

DISTRICT #: METRO
IPLOT NAME: 1190I-148tc-stg49
PATH & FILENAME: IP_PWP:dl443345\N190I-148tc-stg4.dgn

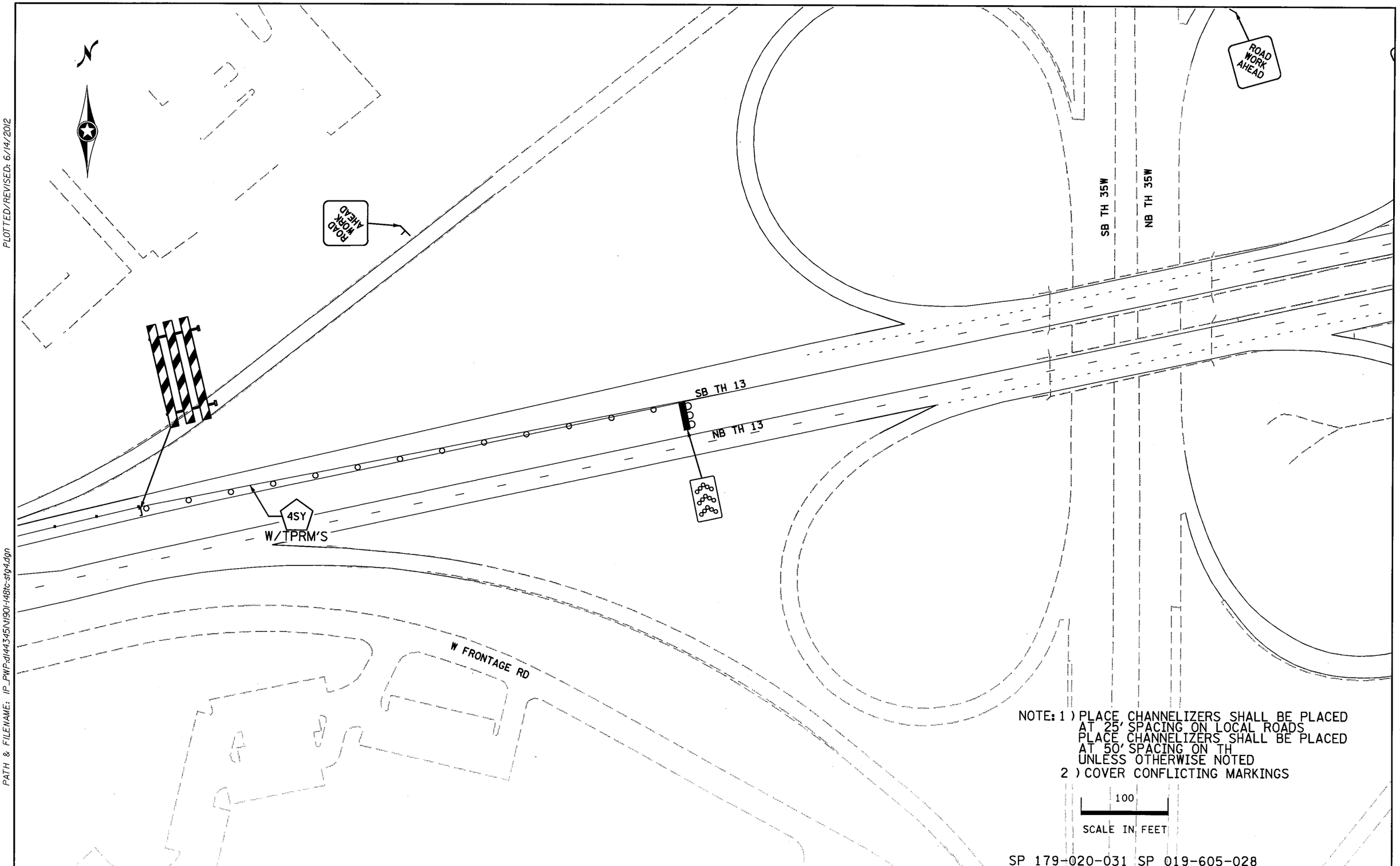

DRAWN BY: SNM	CHECKED BY: KF	CERTIFIED BY _____ LICENSED PROFESSIONAL ENGINEER	LIC. NO. 40535	DATE 6/14/2012	STAGE 4	
					STATE PROJ. NO. 1901-148 (TH 13)	SHEET NO. TC60 OF TC84 SHEETS

PLOTTED/REVISED: 6/14/2012

DISTRICT #: METRO
IPLOT NAME: 1190I-148tc-stg410
PATH & FILENAME: IP_PWP:dl44345\1190I-148tc-stg4.dgn

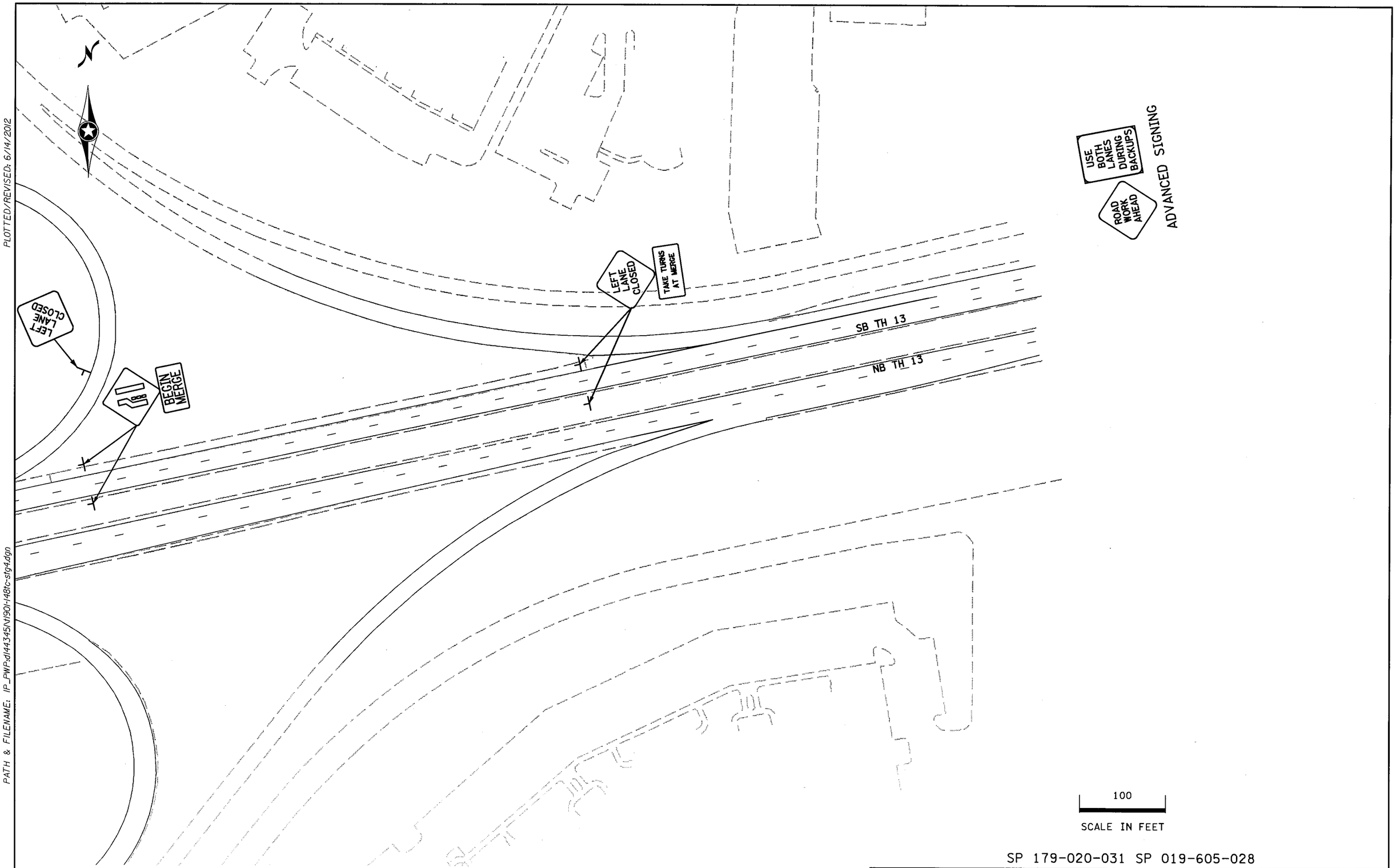

SP 179-020-031 SP 019-605-028

STAGE 4

DRAWN BY: SNM	CHECKED BY: KF	CERTIFIED BY _____ LICENSED PROFESSIONAL ENGINEER	LIC. NO. 40535	DATE 6/14/2012	STATE PROJ. NO. 1901-148 (TH 13)	SHEET NO. TC61	OF TC84 SHEETS

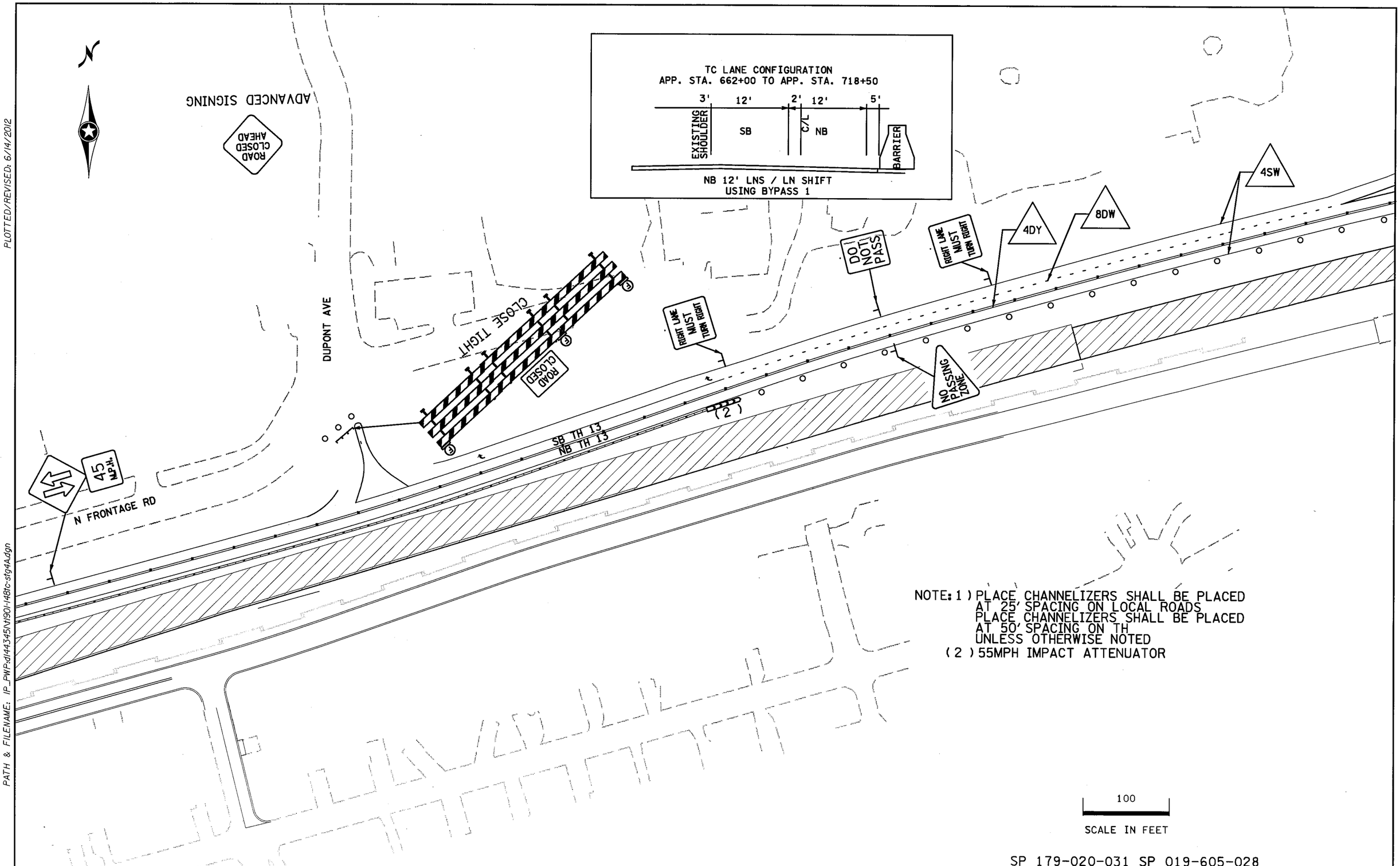

NOTE: 1) PLACE CHANNELIZERS SHALL BE PLACED AT 25' SPACING ON LOCAL ROADS
PLACE CHANNELIZERS SHALL BE PLACED AT 50' SPACING ON TH
UNLESS OTHERWISE NOTED
(2) 55MPH IMPACT ATTENUATOR

SP 179-020-031 SP 019-605-028

STAGE 4A

DRAWN BY: SNM	CHECKED BY: KF	CERTIFIED BY _____ LICENSED PROFESSIONAL ENGINEER	LIC. NO. 40535	DATE 6/14/2012	STATE PROJ. NO. 1901-148 (TH 13) SHEET NO. TC62 OF TC84 SHEETS

PLOTTED/REVISED: 6/14/2012

DISTRICT #: METRO
IPLOT NAME: 1190I-148tc-stg4AI
PATH & FILENAME: IP_PWP:d144345\1190I-148tc-stg4A.dgn

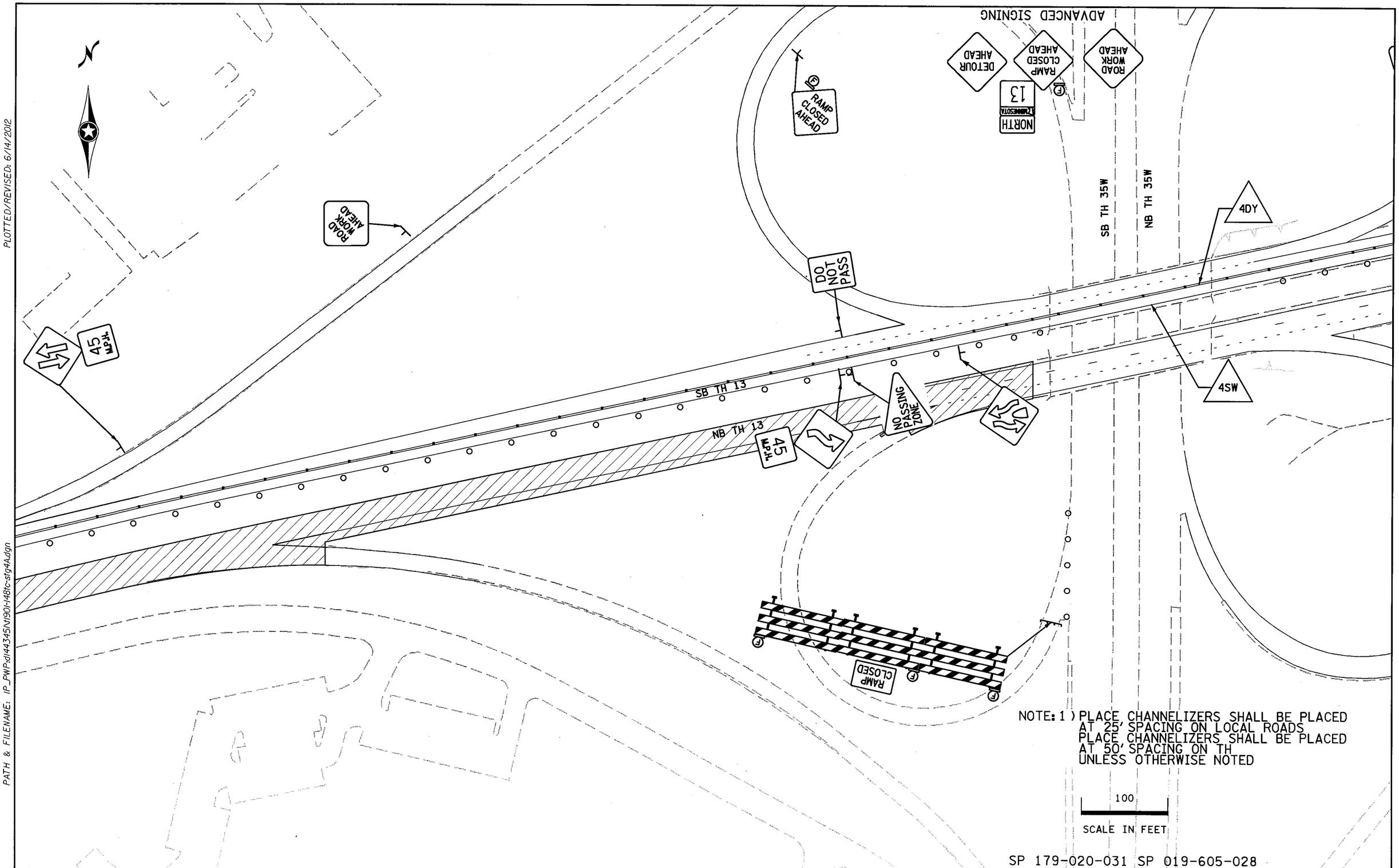

NOTE: 1) PLACE CHANNELIZERS SHALL BE PLACED AT 25' SPACING ON LOCAL ROADS
PLACE CHANNELIZERS SHALL BE PLACED AT 50' SPACING ON TH
UNLESS OTHERWISE NOTED

SP 179-020-031 SP 019-605-028

STAGE 4A

DRAWN BY: SNM	CHECKED BY: KF	CERTIFIED BY [signature] LICENSED PROFESSIONAL ENGINEER	LIC. NO. 40535	DATE 6/14/2012	STATE PROJ. NO. 1901-148 (TH 13)	SHEET NO. TC63	OF TC84 SHEETS

PLOTTED/REVISED: 6/14/2012

DISTRICT #: METRO
IPLOT NAME: t1901-148tc-stg4A2
PATH & FILENAME: IP_PWP:d144345\t1901-148tc-stg4A.dgn

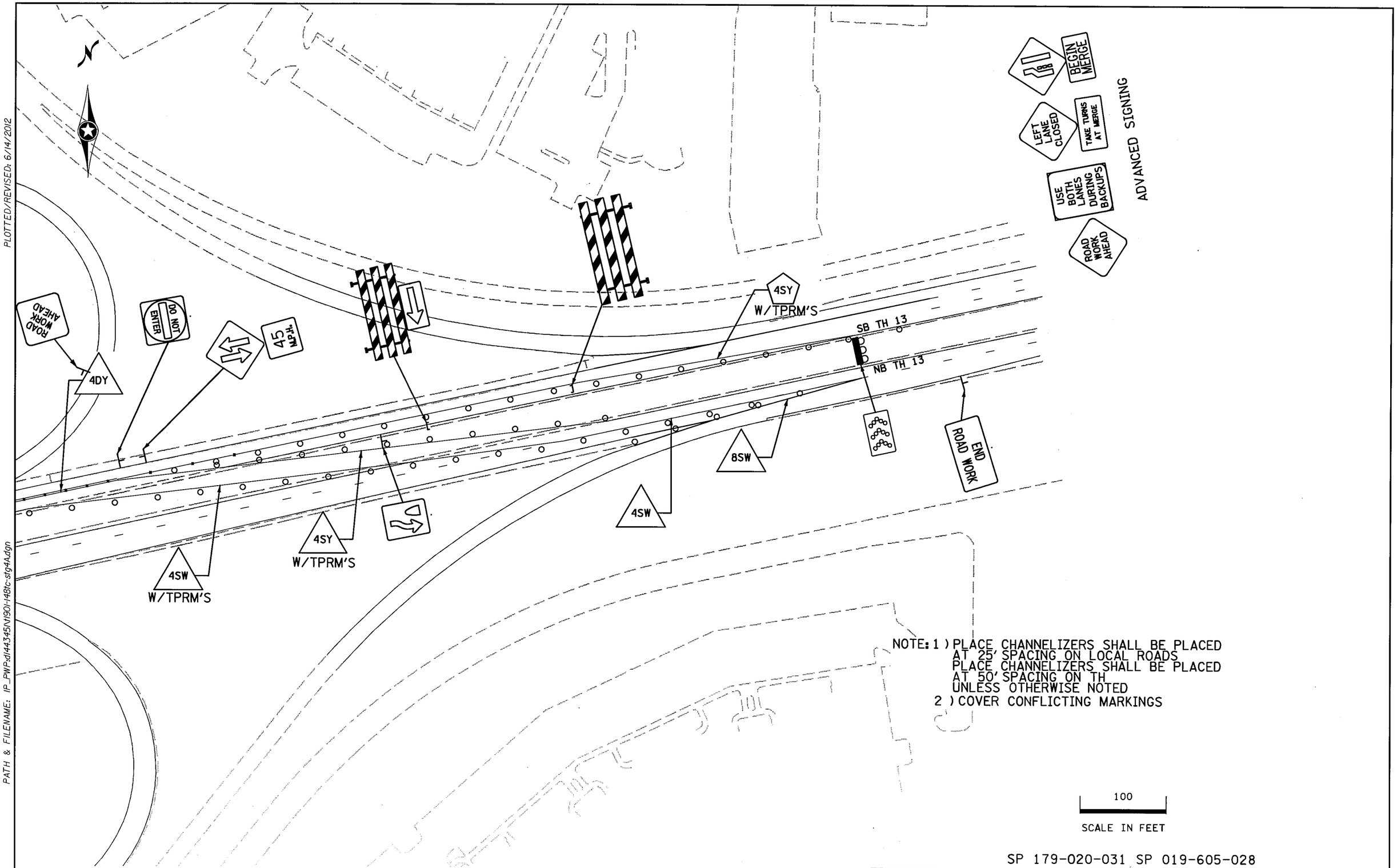

NOTE: 1) PLACE CHANNELIZERS SHALL BE PLACED AT 25' SPACING ON LOCAL ROADS
PLACE CHANNELIZERS SHALL BE PLACED AT 50' SPACING ON TH
UNLESS OTHERWISE NOTED
2) COVER CONFLICTING MARKINGS

SP 179-020-031 SP 019-605-028

STAGE 4A

DRAWN BY: SNM	CHECKED BY: KF	CERTIFIED BY _____ LICENSED PROFESSIONAL ENGINEER	LIC. NO. 40535	DATE 6/14/2012	STATE PROJ. NO. 1901-148 (TH 13)	SHEET NO. TC64	OF TC84 SHEETS

PLOTTED/REVISED: 6/14/2012

DISTRICT #: METRO
IPLOT NAME: t1901-148tc-stg4A3
PATH & FILENAME: IP_PWP:dl44345\t1901-148tc-stg4A.dgn

PLOTTED/REVISED: 6/14/2012

DISTRICT #: METRO
IPLOT NAME: 1190I-148tc-stg5I
PATH & FILENAME: IP_PWP:dl/443345/N190I-148tc-stg5.dgn

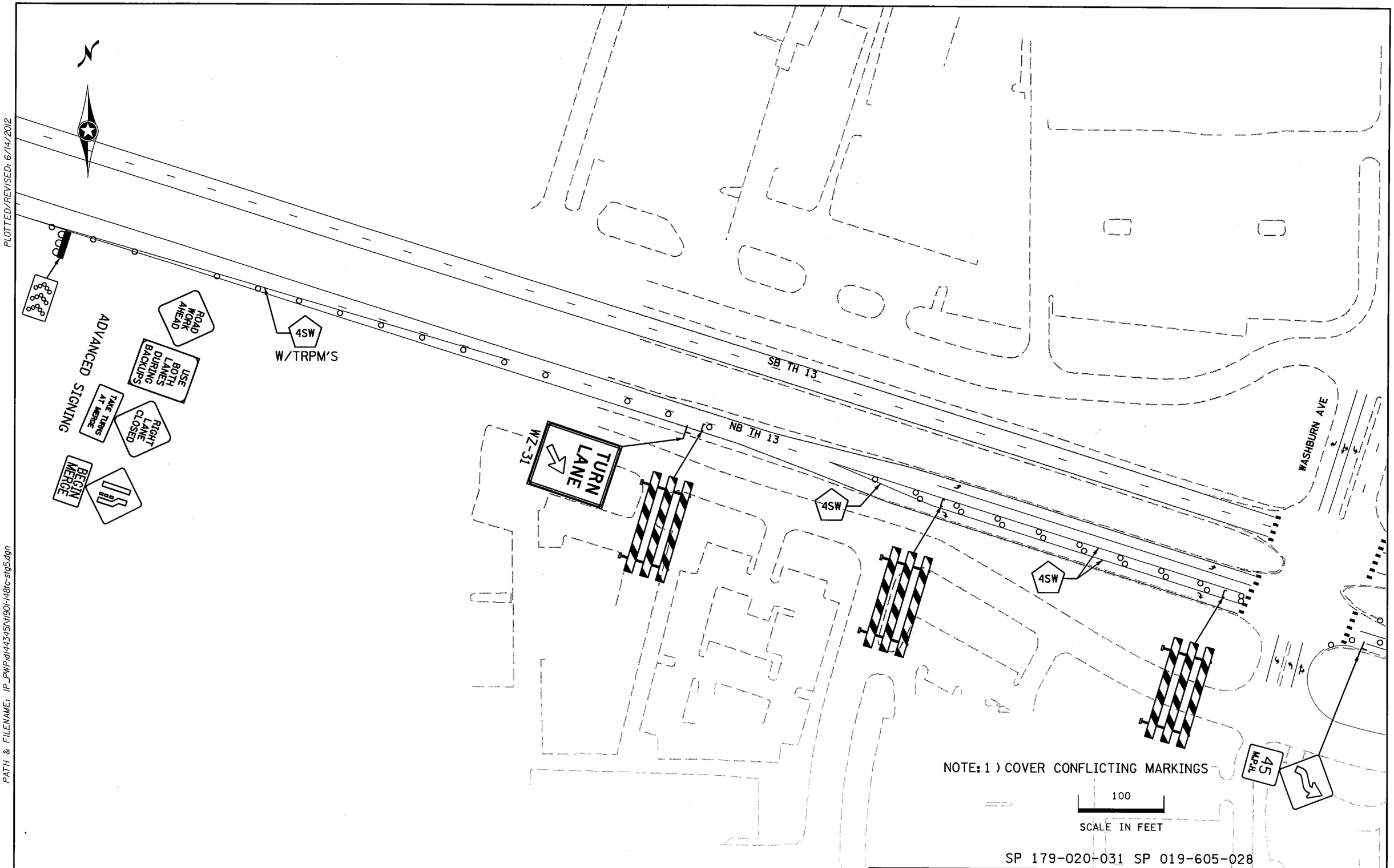

SP 179-020-031 SP 019-605-028

STAGE 5

DRAWN BY: SNM	CHECKED BY: KF	CERTIFIED BY _____ LICENSED PROFESSIONAL ENGINEER	LIC. NO. 40535	DATE 6/14/2012	STATE PROJ. NO. 1901-148 (TH 13)	SHEET NO. TC65	OF TC84 SHEETS

PLOTTED/REVISED: 6/14/2012

DISTRICT #: METRO
IPLOT NAME: 1190I-148tc-stg52
PATH & FILENAME: IP_PWP:dl44345\tj90i-148tc-stg5.dgn

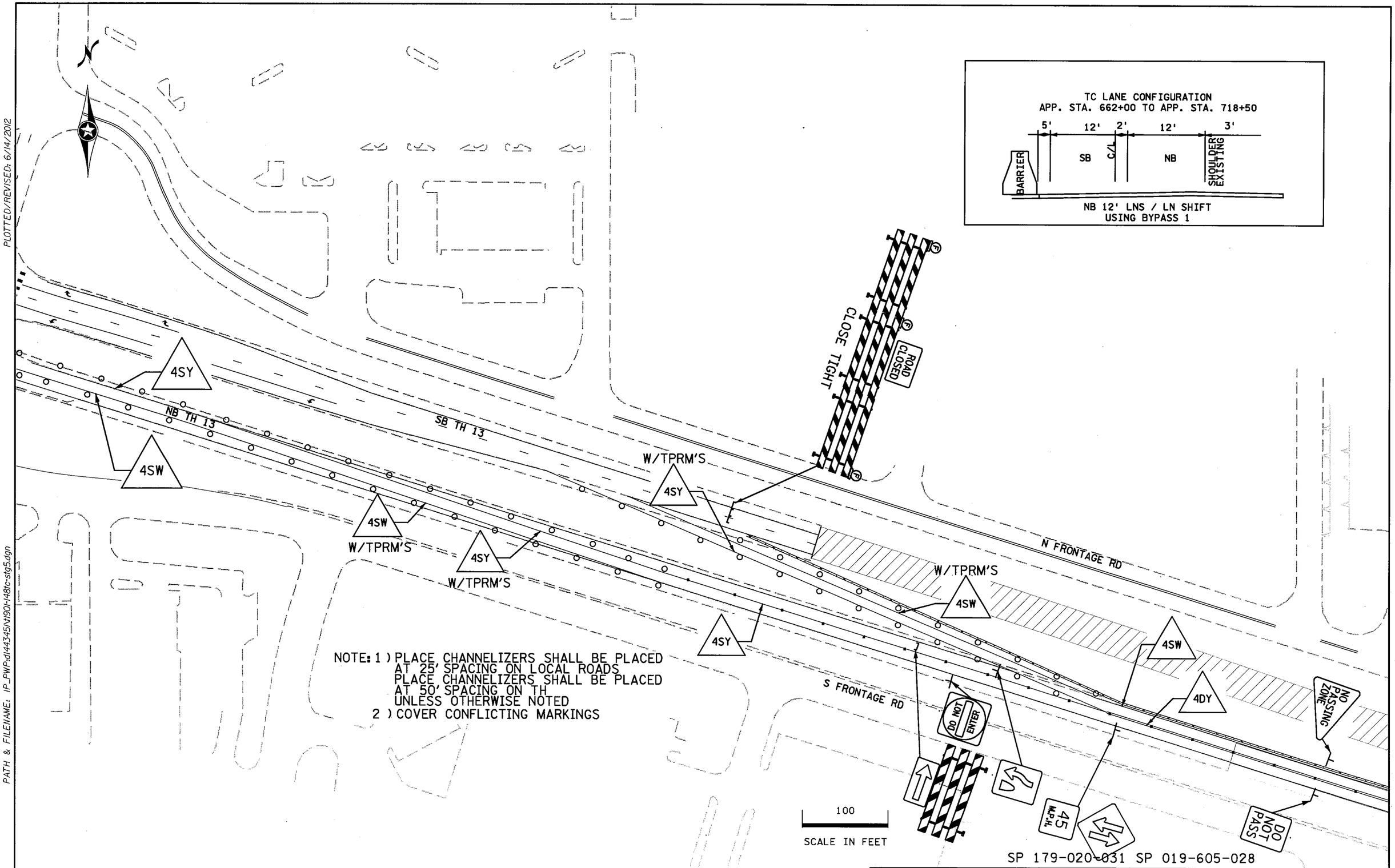

NOTE: 1) PLACE CHANNELIZERS SHALL BE PLACED AT 25' SPACING ON LOCAL ROADS
PLACE CHANNELIZERS SHALL BE PLACED AT 50' SPACING ON TH
UNLESS OTHERWISE NOTED
2) COVER CONFLICTING MARKINGS

SP 179-020-031 SP 019-605-028

STAGE 5

DRAWN BY: SNM	CHECKED BY: KF	CERTIFIED BY _____ LICENSED PROFESSIONAL ENGINEER	LIC. NO. 40535	DATE 6/14/2012	STATE PROJ. NO. 1901-148 (TH 13)	SHEET NO. TC66	OF TC84 SHEETS

PLOTTED/REVISED: 6/14/2012

DISTRICT #: METRO
IPLOT NAME: n190l-148tc-stg53
PATH & FILENAME: IP_PWP:dl144345\N190l-148tc-stg5.dgn

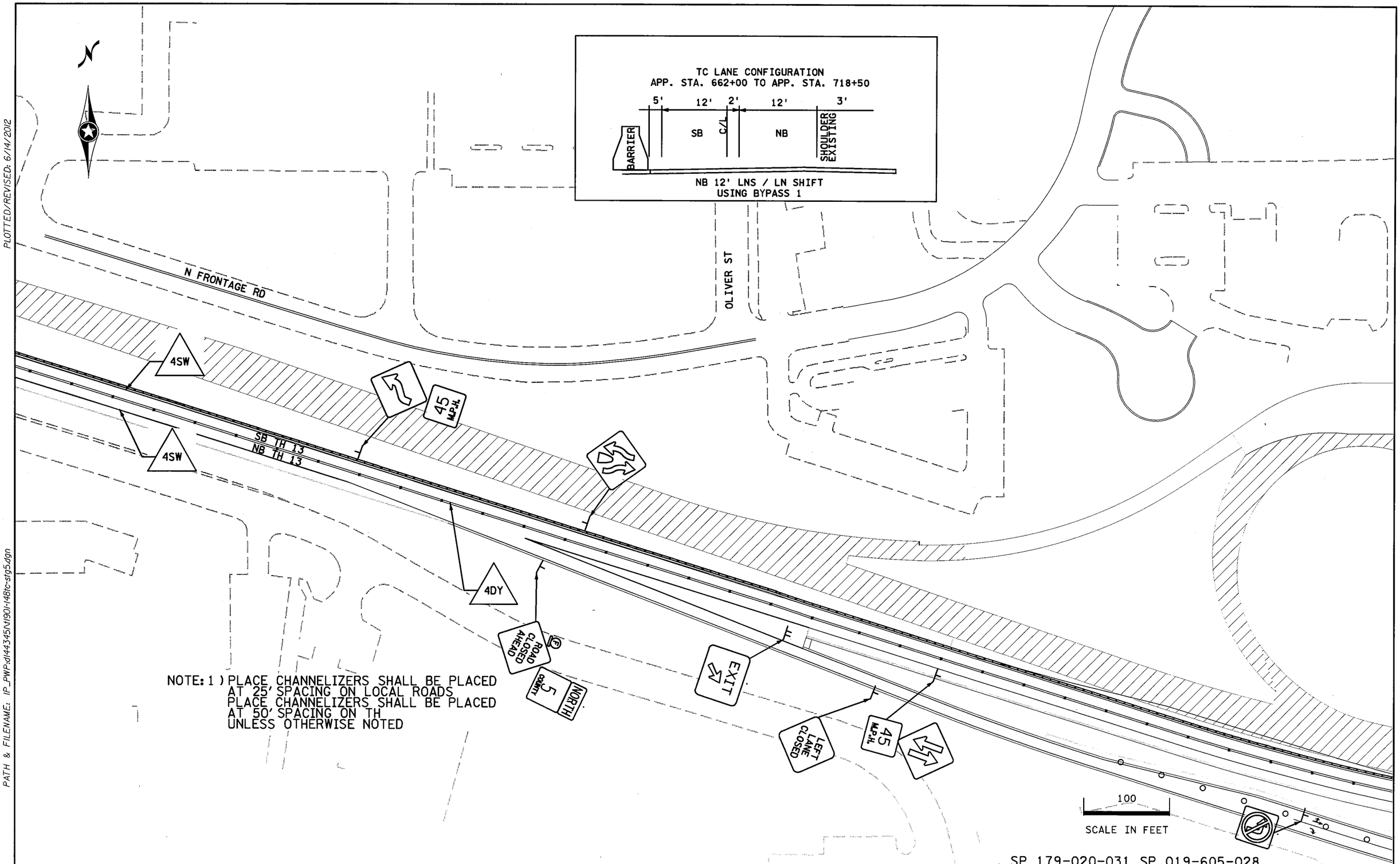

NOTE: 1) PLACE CHANNELIZERS SHALL BE PLACED AT 25' SPACING ON LOCAL ROADS
PLACE CHANNELIZERS SHALL BE PLACED AT 50' SPACING ON TH
UNLESS OTHERWISE NOTED

SP 179-020-031 SP 019-605-028

STAGE 5

DRAWN BY: SNM	CHECKED BY: KF	CERTIFIED BY _____ LICENSED PROFESSIONAL ENGINEER	LIC. NO. 40535	DATE 6/14/2012	STATE PROJ. NO. 1901-148 (TH 13)	SHEET NO. TC67	OF TC84 SHEETS

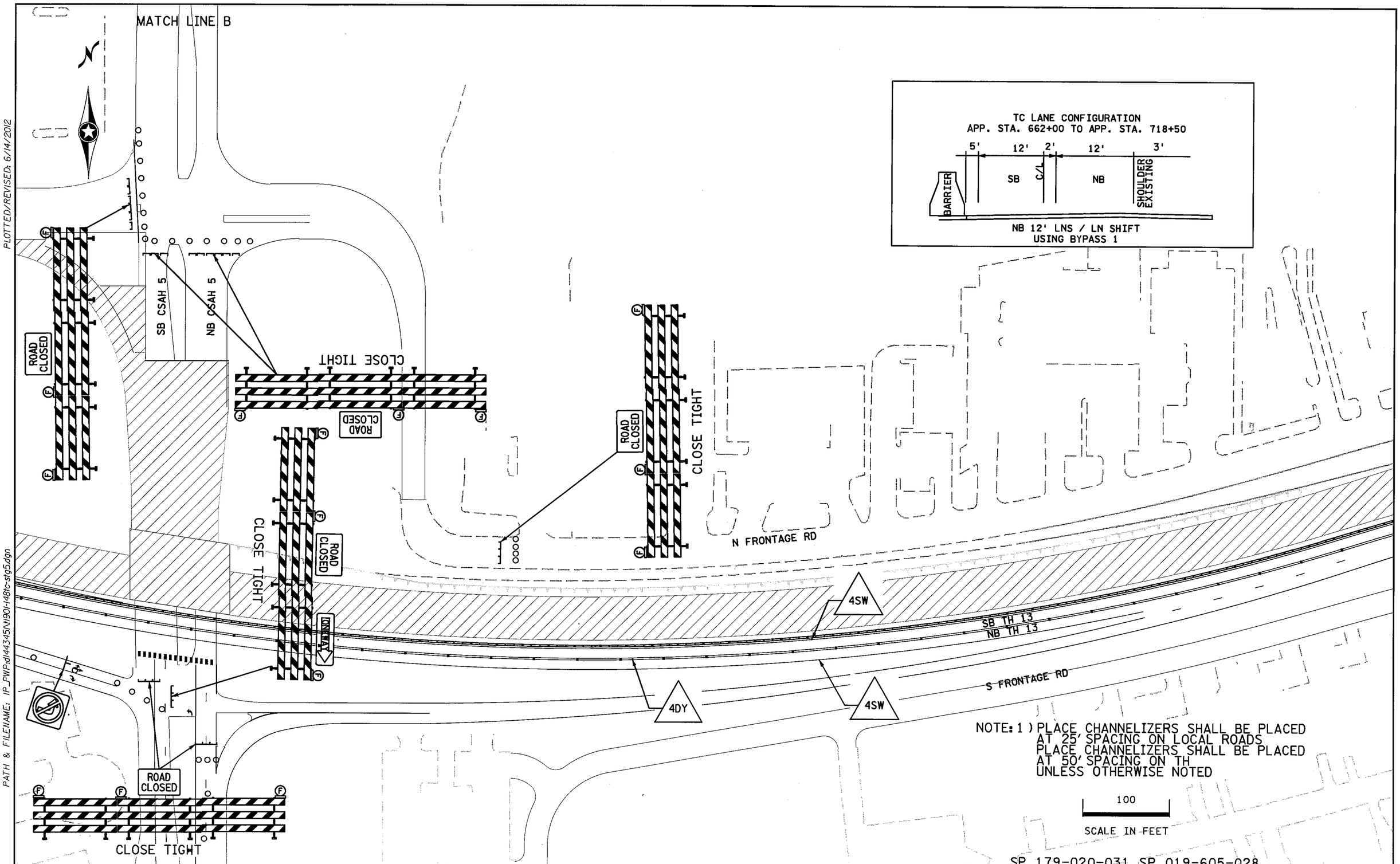

NOTE: 1) PLACE CHANNELIZERS SHALL BE PLACED AT 25' SPACING ON LOCAL ROADS
PLACE CHANNELIZERS SHALL BE PLACED AT 50' SPACING ON TH
UNLESS OTHERWISE NOTED

SP 179-020-031 SP 019-605-028

STAGE 5

DRAWN BY: SNM	CHECKED BY: TD	CERTIFIED BY _____ LICENSED PROFESSIONAL ENGINEER	LIC. NO. 40535	DATE 6/14/2012	STATE PROJ. NO. 1901-148 (TH 13) SHEET NO. TC68 OF TC84 SHEETS

DISTRICT #: METRO
IPLOT NAME: 1901-148tc-stg54
PATH & FILENAME: IP_PWP:d1443345\1901-148tc-stg5.dgn
PLOTTED/REVISED: 6/14/2012

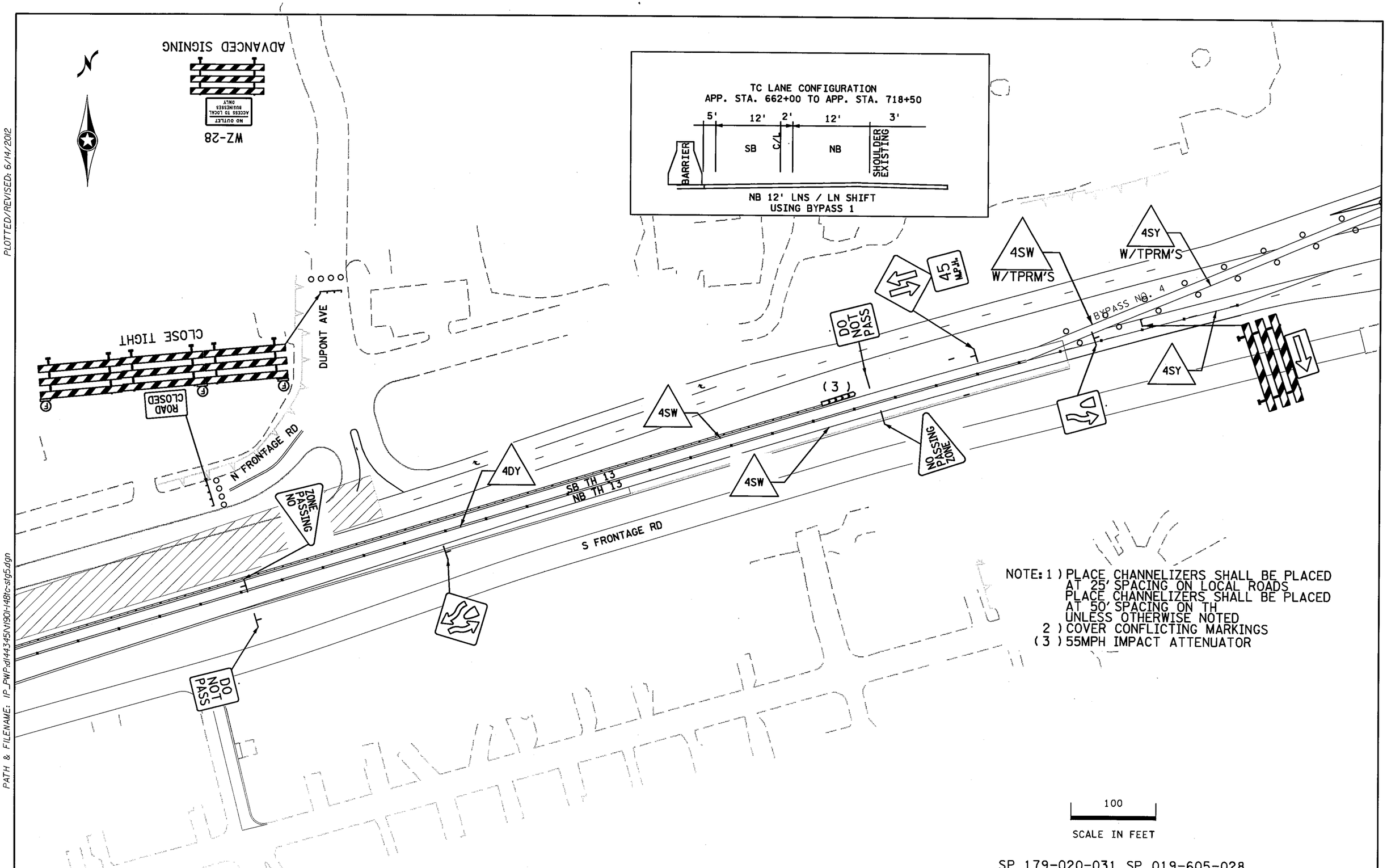

SP 179-020-031 SP 019-605-028

STAGE 5

DRAWN BY: SNM	CHECKED BY: KF	CERTIFIED BY _____ LICENSED PROFESSIONAL ENGINEER	LIC. NO. 40535	DATE 6/14/2012	STATE PROJ. NO. 1901-148 (TH 13)	SHEET NO. TC69	OF TC84 SHEETS

PLOTTED/REVISED: 6/14/2012

DISTRICT #: METRO
IPLOT NAME: 1190i-148tc-stg55
PATH & FILENAME: IP_PWP:dl44345\1190i-148tc-stg5.dgn

PLOTTED/REVISED: 7/27/2012

DISTRICT #: METRO
IPLOT NAME: 1190I-148tc-stg5
PATH & FILENAME: IP_PWP:dl443345\N190I-148tc-stg5.dgn

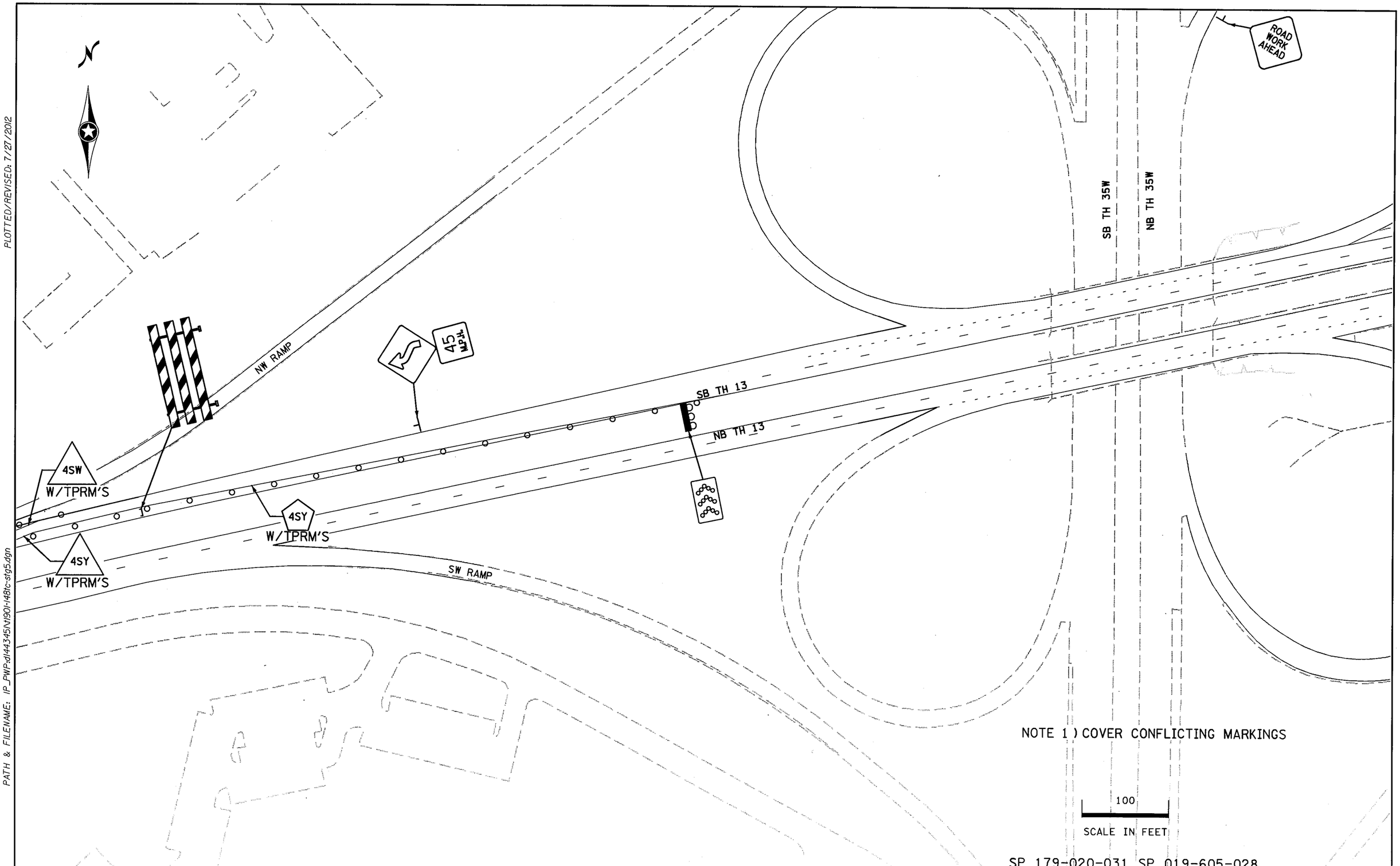

SP 179-020-031 SP 019-605-028

DRAWN BY: SNM	CHECKED BY: KF	CERTIFIED BY _____ LICENSED PROFESSIONAL ENGINEER	LIC. NO. 40535	DATE 7/27/2012	STAGE 5		
					STATE PROJ. NO. 1901-148 (TH 13)	SHEET NO. TC70	OF TC84 SHEETS

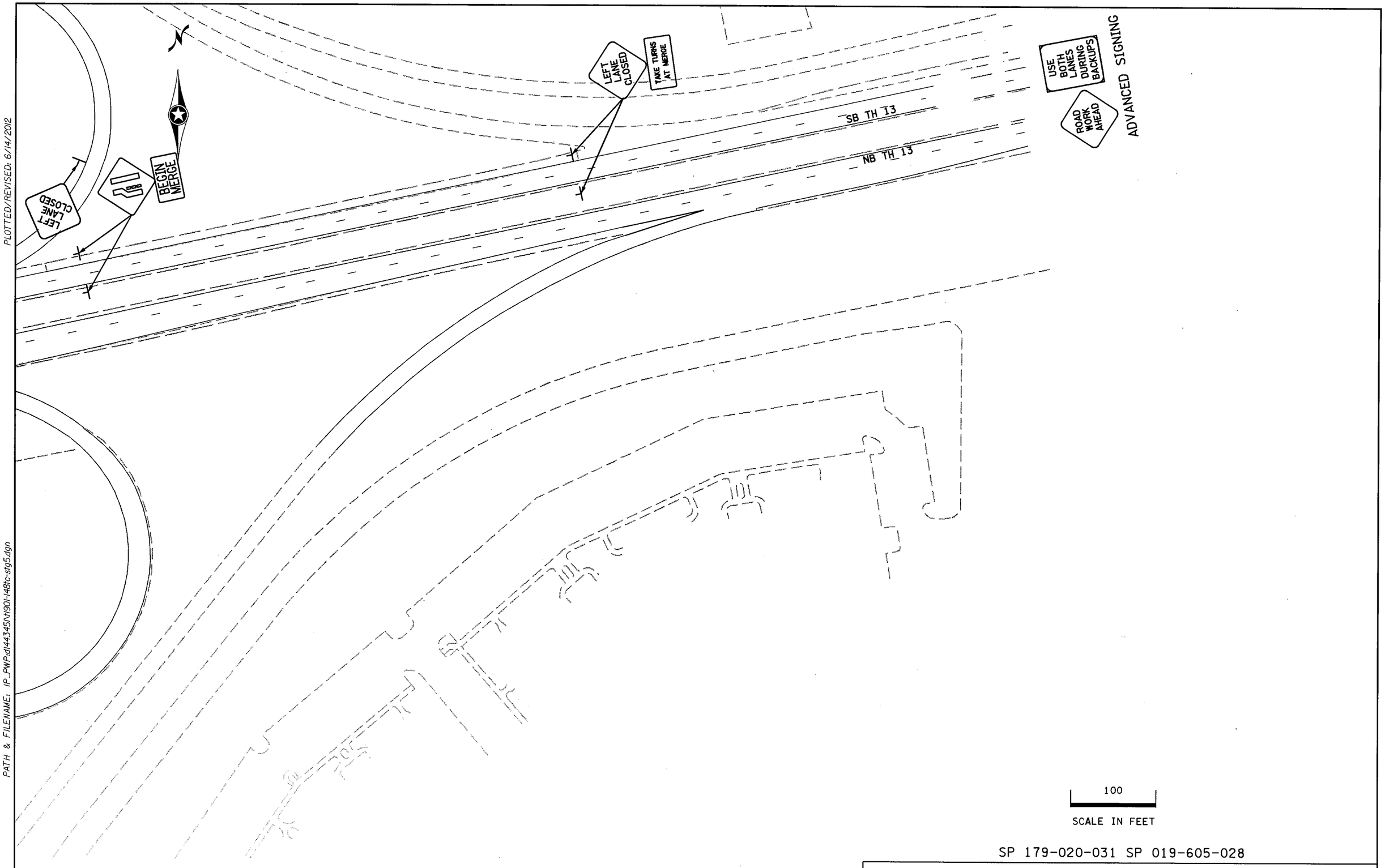

SP 179-020-031 SP 019-605-028

STAGE 5

DRAWN BY: SNM	CHECKED BY: KF	CERTIFIED BY _____ LICENSED PROFESSIONAL ENGINEER	LIC. NO. 40535	DATE 6/14/2012	STATE PROJ. NO. 1901-148 (TH 13)	SHEET NO. TC71	OF TC84 SHEETS

PLOTTED/REVISED: 6/14/2012

DISTRICT #: METRO
IPLOT NAME: 1190I-148tc-stg5I0
PATH & FILENAME: IP_PWP:dl44345\t190I-148tc-stg5.dgn

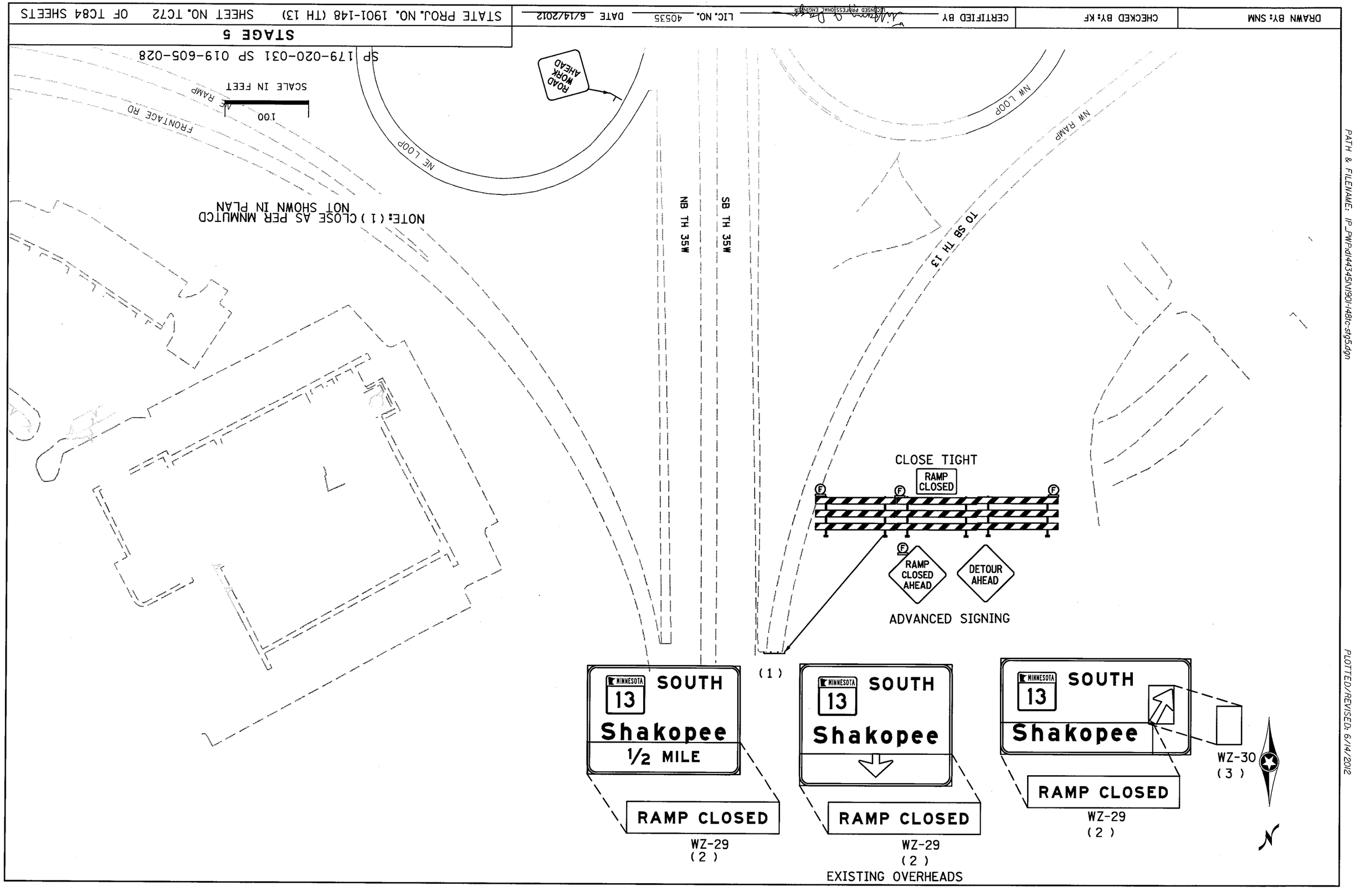

DISTRICT : METRO
IPLOT NAME: 1901-148tc-stg57
PATH & FILENAME: IP_PWP:d144345\1901-148tc-stg5.dgn

PLOTTED/REVISED: 6/14/2012

PLOTTED/REVISED: 6/14/2012

DISTRICT #: METRO
IPLOT NAME: 1190I-148tc-stg58
PATH & FILENAME: IP_PWP:dl44345\N190I-148tc-stg5.dgn

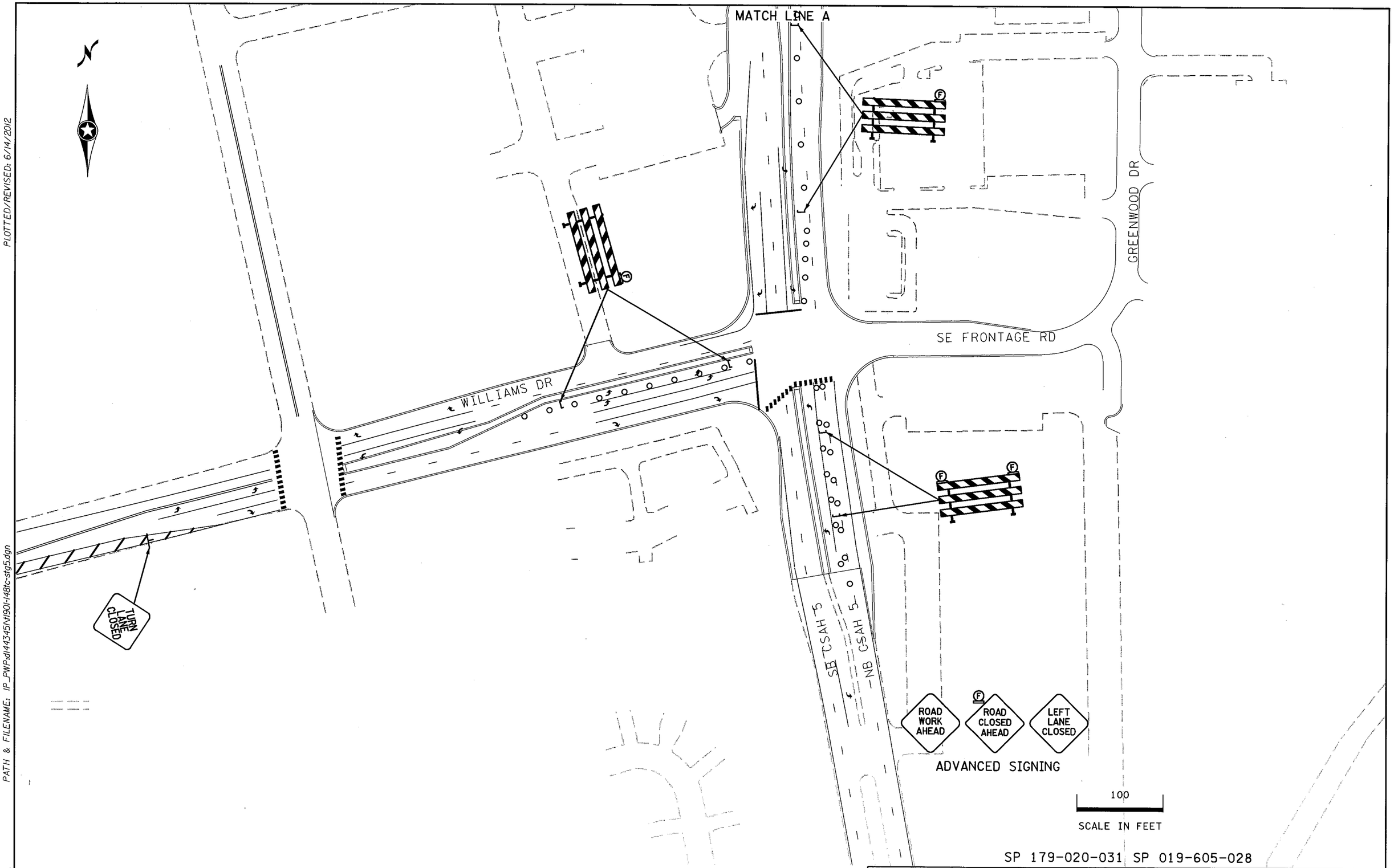

SP 179-020-031 SP 019-605-028

STAGE 5

DRAWN BY: SNM	CHECKED BY: KF	CERTIFIED BY _____ LICENSED PROFESSIONAL ENGINEER	LIC. NO. 40535	DATE 6/14/2012	STATE PROJ. NO. 1901-148 (TH 13)	SHEET NO. TC73	OF TC84 SHEETS

PLOTTED/REVISED: 6/14/2012

DISTRICT #: METRO
IPLOT NAME: 1190I-148tc-stg59
PATH & FILENAME: IP_PWP-d/44345/N190I-148tc-stg5.dgn

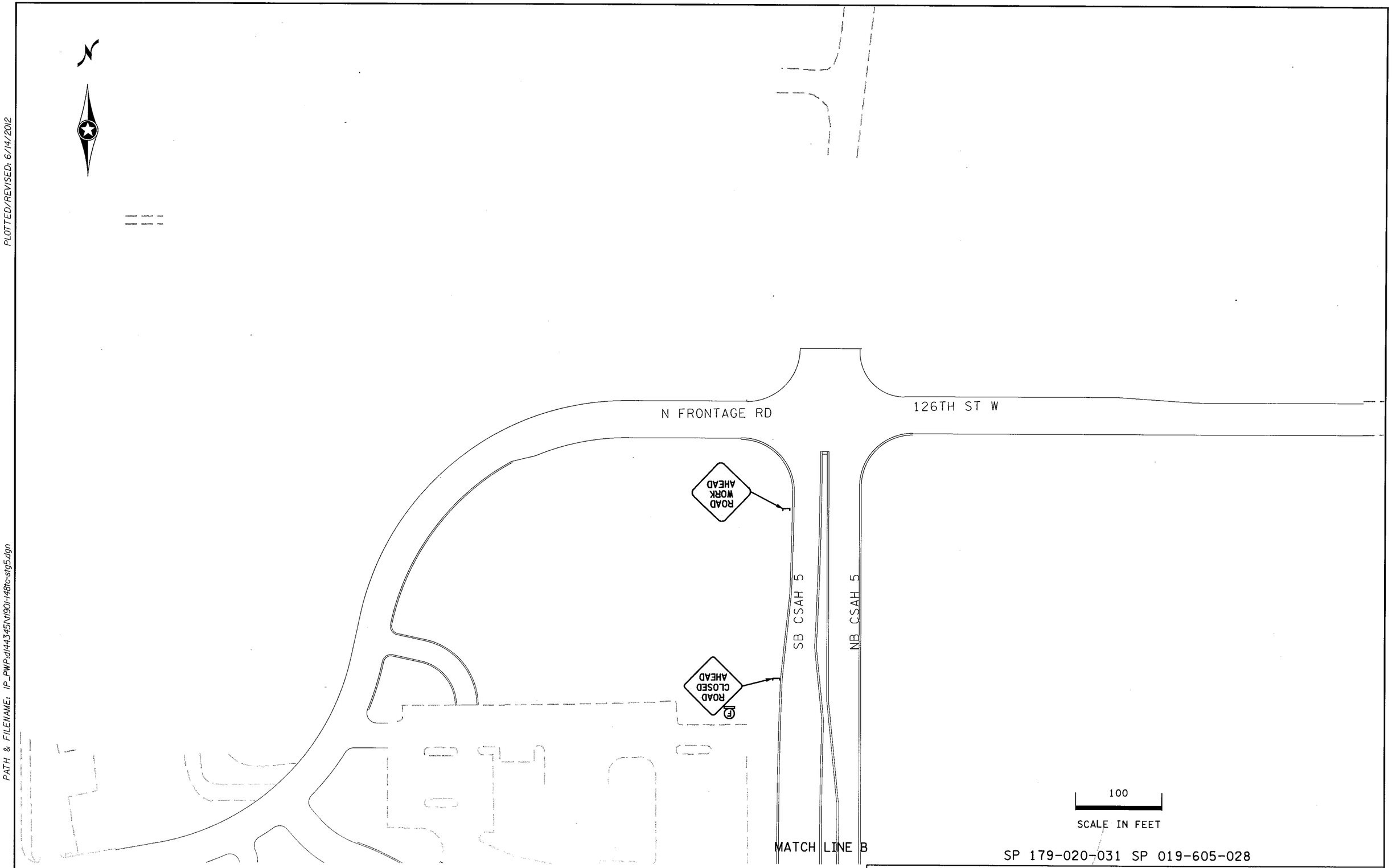

SP 179-020-031 SP 019-605-028

STAGE 5

DRAWN BY: SNM	CHECKED BY: KF	CERTIFIED BY _____ LICENSED PROFESSIONAL ENGINEER	LIC. NO. 40535	DATE 6/14/2012	STATE PROJ. NO. 1901-148 (TH 13)	SHEET NO. TC74	OF TC84 SHEETS

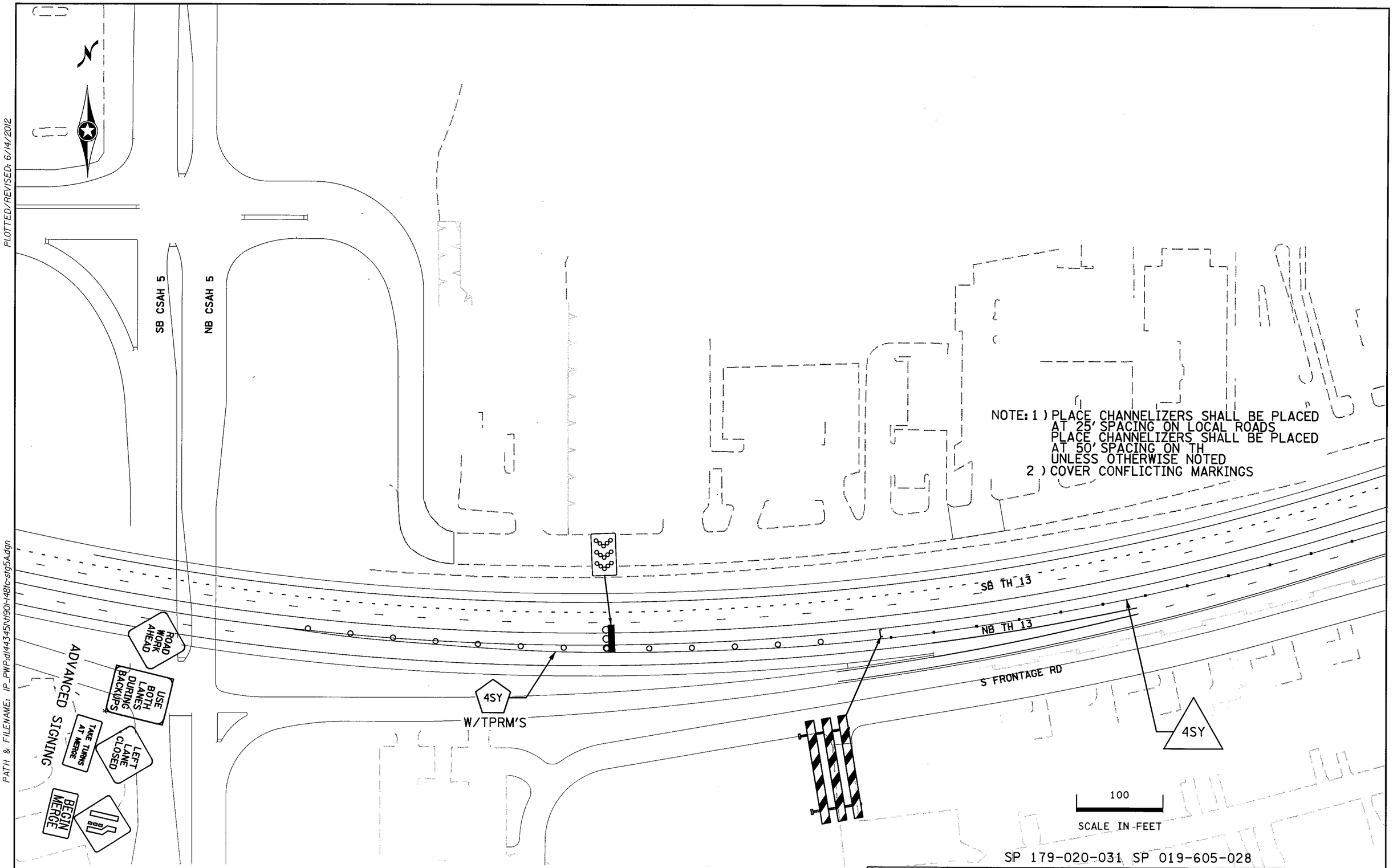

NOTE: 1) PLACE CHANNELIZERS SHALL BE PLACED AT 25' SPACING ON LOCAL ROADS
PLACE CHANNELIZERS SHALL BE PLACED AT 50' SPACING ON TH
UNLESS OTHERWISE NOTED
2) COVER CONFLICTING MARKINGS

SP 179-020-031 SP 019-605-028

STAGE 5A

DRAWN BY: SNM	CHECKED BY: KF	CERTIFIED BY [signature] LICENSED PROFESSIONAL ENGINEER	LIC. NO. 40535	DATE 6/14/2012	STATE PROJ. NO. 1901-148 (TH 13)	SHEET NO. TC75	OF TC84 SHEETS

PLOTTED/REVISED: 6/14/2012

DISTRICT #: METRO
IPLOT NAME: t1901-148tc-stg5A1
PATH & FILENAME: IP_PWP:d144345\t1901-148tc-stg5A.dgn

PLOTTED/REVISED: 6/14/2012

DISTRICT #: METRO
IPLOT NAME: 1190I-148Ic-stg5A2
PATH & FILENAME: IP_PWP:d144345\N190I-148Ic-stg5A.dgn

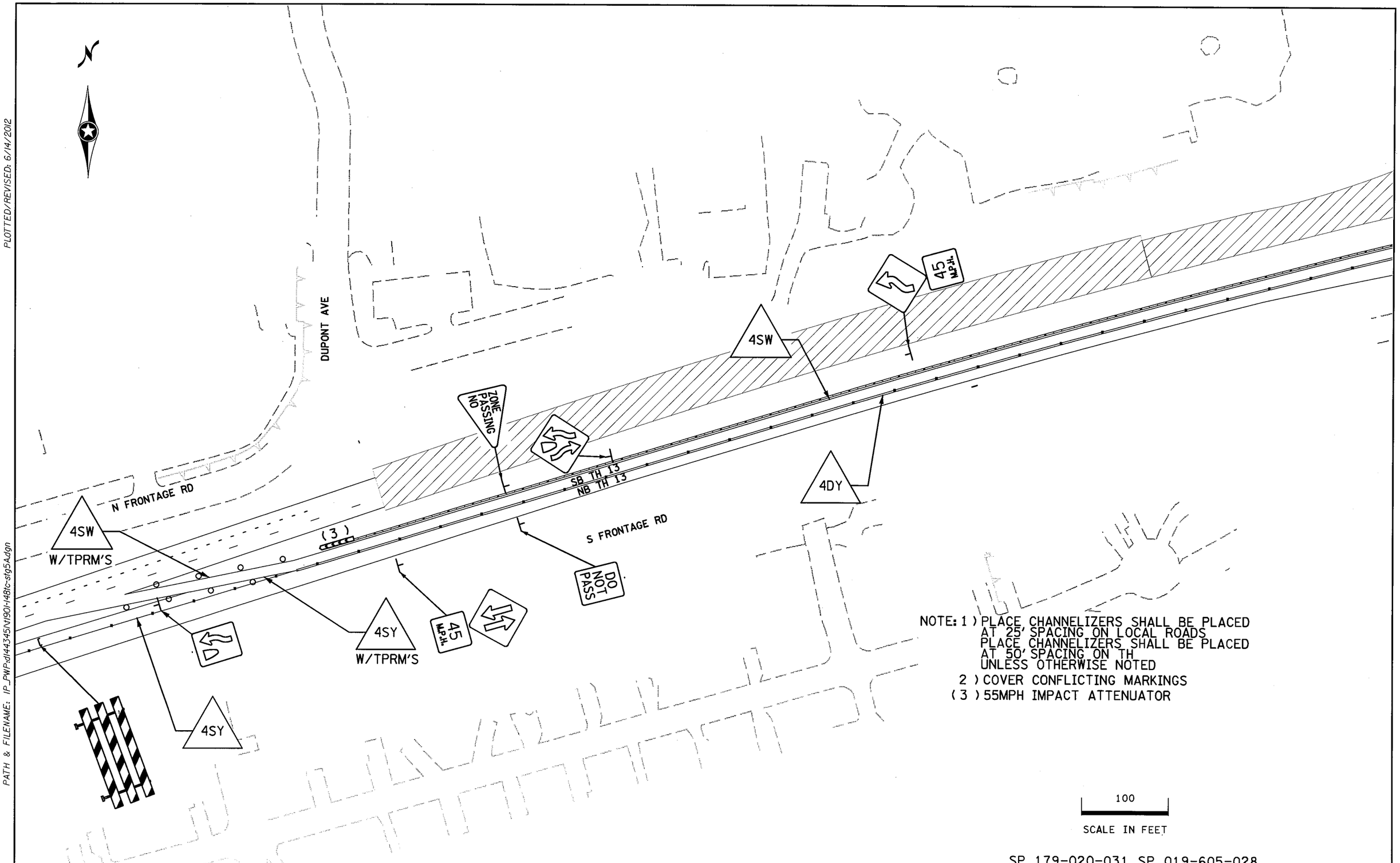

SP 179-020-031 SP 019-605-028

STAGE 5A

DRAWN BY: SNM	CHECKED BY: KF	CERTIFIED BY _____ LICENSED PROFESSIONAL ENGINEER	LIC. NO. 40535	DATE 6/14/2012	STATE PROJ. NO. 1901-148 (TH 13)	SHEET NO. TC76	OF TC84 SHEETS

PLOTTED/REVISED: 6/14/2012

DISTRICT #: METRO
IPLOT NAME: 1190I-148tc-stg5A3
PATH & FILENAME: IP_PWP:dl44345\N190I-148tc-stg5A.dgn

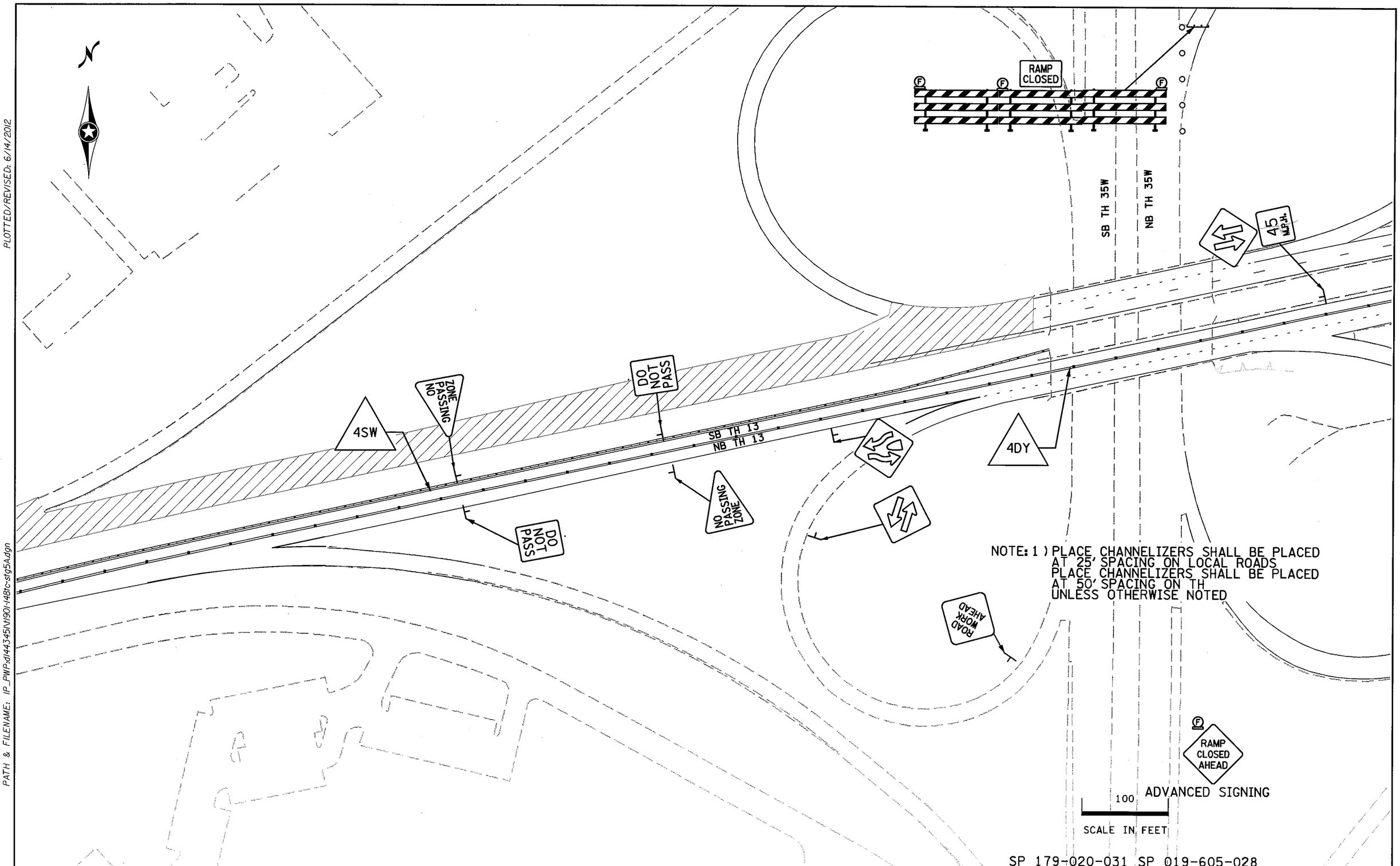

NOTE: 1) PLACE CHANNELIZERS SHALL BE PLACED AT 25' SPACING ON LOCAL ROADS
PLACE CHANNELIZERS SHALL BE PLACED AT 50' SPACING ON TH
UNLESS OTHERWISE NOTED

SP 179-020-031 SP 019-605-028

STAGE 5A

DRAWN BY: SNM	CHECKED BY: KF	CERTIFIED BY _____ LICENSED PROFESSIONAL ENGINEER	LIC. NO. 40535	DATE 6/14/2012	STATE PROJ. NO. 1901-148 (TH 13)	SHEET NO. TC77	OF TC84 SHEETS

PLOTTED/REVISED: 6/14/2012

DISTRICT #: METRO
IPLOT NAME: t1901-148tc-stg5A4
PATH & FILENAME: IP_PWPdl443345\t1901-148tc-stg5A.dgn

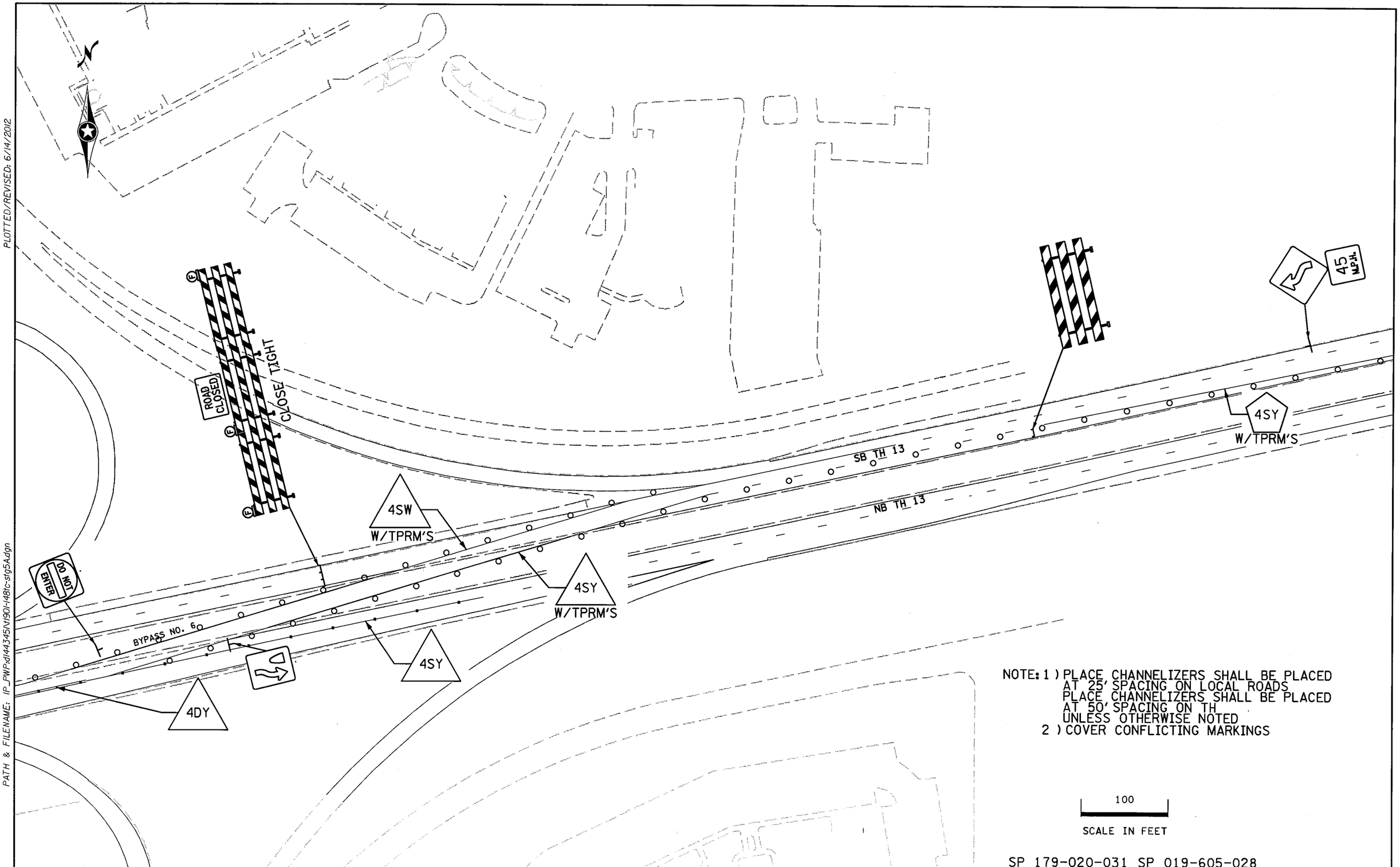

NOTE: 1) PLACE CHANNELIZERS SHALL BE PLACED AT 25' SPACING ON LOCAL ROADS
PLACE CHANNELIZERS SHALL BE PLACED AT 50' SPACING ON TH
UNLESS OTHERWISE NOTED
2) COVER CONFLICTING MARKINGS

SP 179-020-031 SP 019-605-028

STAGE 5A

DRAWN BY: SNM	CHECKED BY: KF	CERTIFIED BY _____ LICENSED PROFESSIONAL ENGINEER	LIC. NO. 40535	DATE 6/14/2012	STATE PROJ. NO. 1901-148 (TH 13)	SHEET NO. TC78	OF TC84 SHEETS

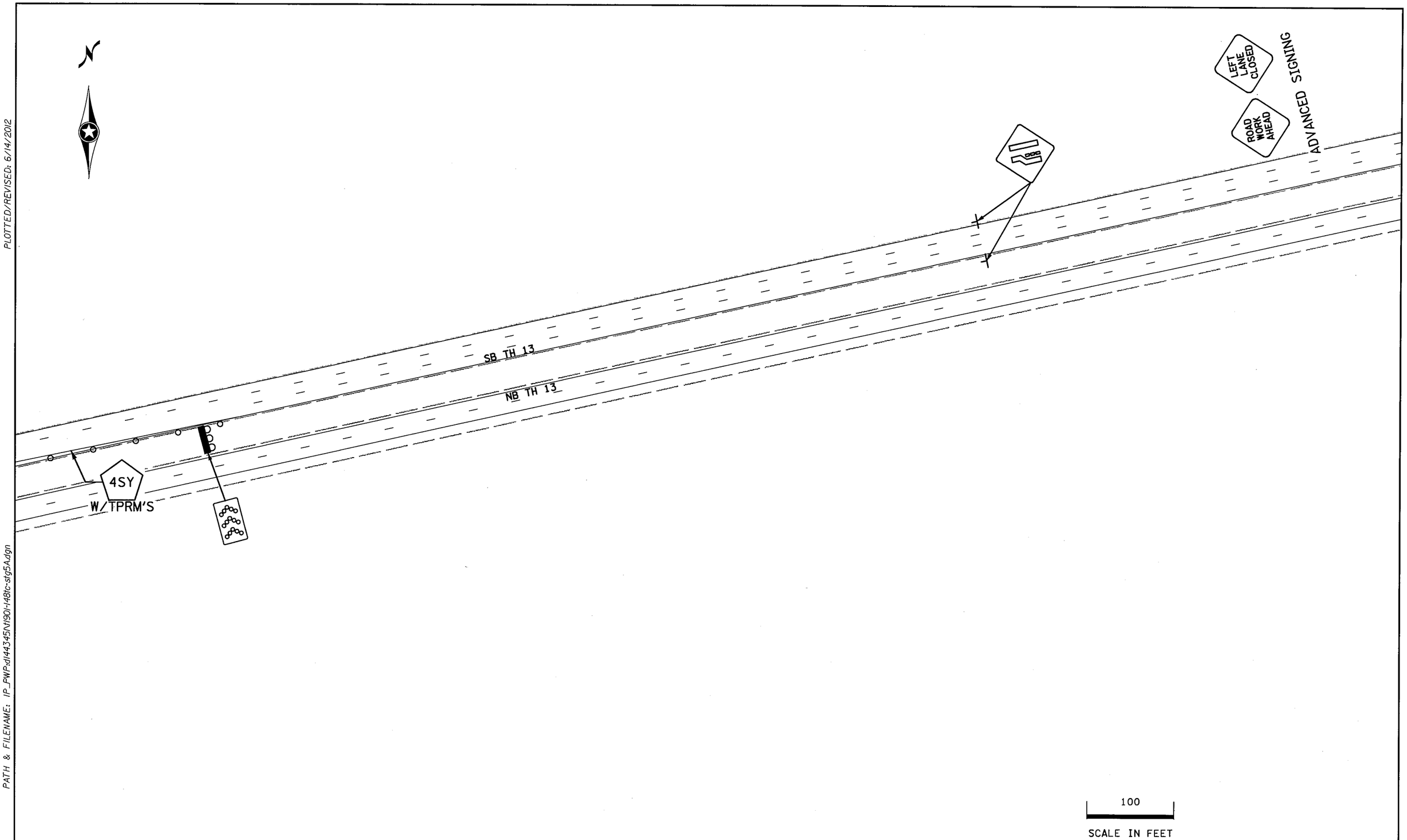

SP 179-020-031 SP 019-605-028

STAGE 5A

DRAWN BY: SNM	CHECKED BY: KF	CERTIFIED BY _____ LICENSED PROFESSIONAL ENGINEER	LIC. NO. 40535	DATE 6/14/2012	STATE PROJ. NO. 1901-148 (TH 13)	SHEET NO. TC79	OF TC84 SHEETS

PLOTTED/REVISED: 6/14/2012

DISTRICT #: METRO
IPLOT NAME: 1901-148tc-stg5A5
PATH & FILENAME: IP_PWP:dl/443451\1901-148tc-stg5A.dgn

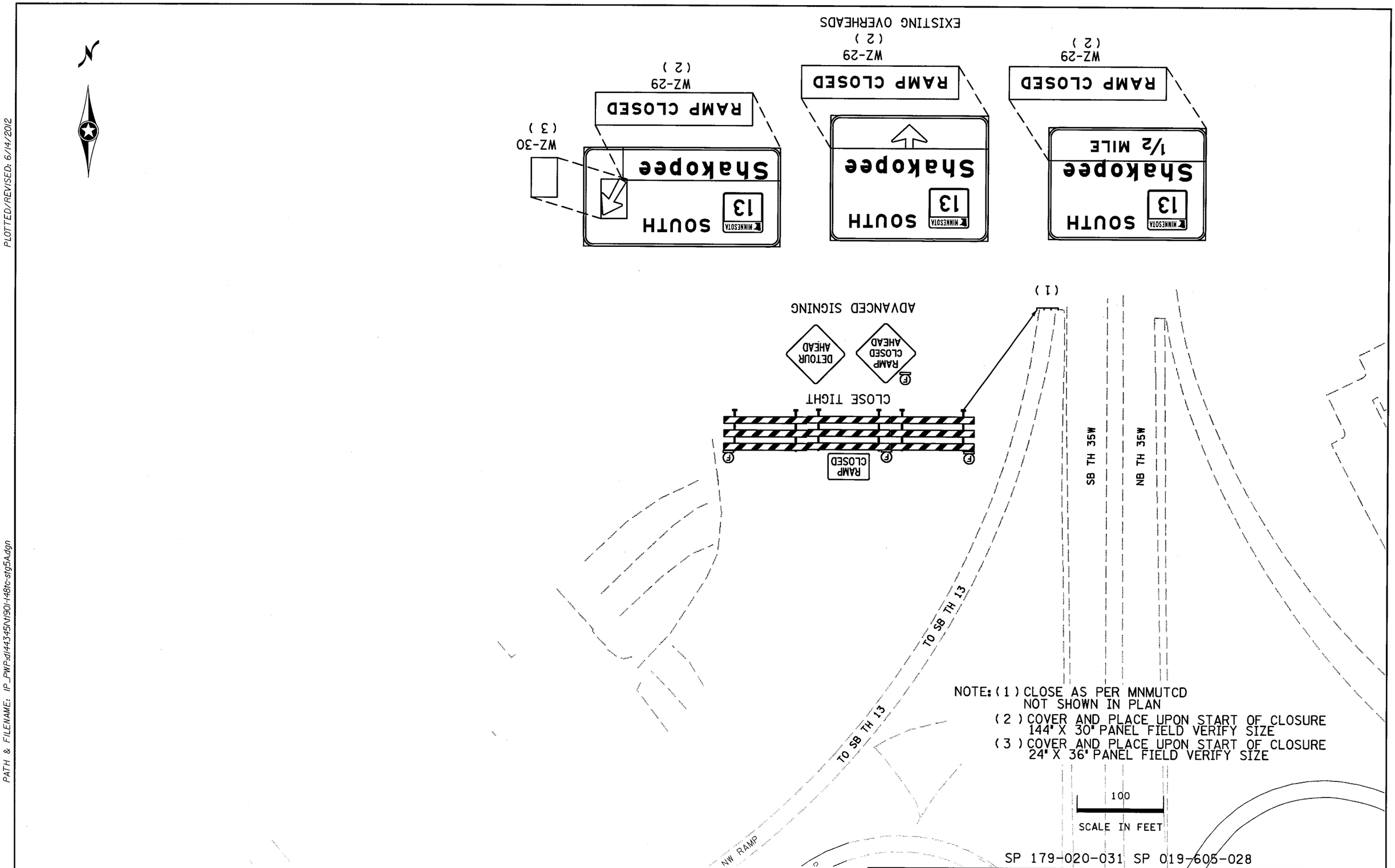

PLOTTED/REVISED: 6/14/2012

DISTRICT #: METRO
IPLOT NAME: t1901-148tc-stg5A6
PATH & FILENAME: IP_PWP:d1443145\t1901-148tc-stg5A.dgn

STAGE 5A

DRAWN BY: SNM	CHECKED BY: KF	CERTIFIED BY _____ LICENSED PROFESSIONAL ENGINEER	LIC. NO. 40535	DATE 6/14/2012	STATE PROJ. NO. 1901-148 (TH 13)	SHEET NO. TC80	OF TC84 SHEETS

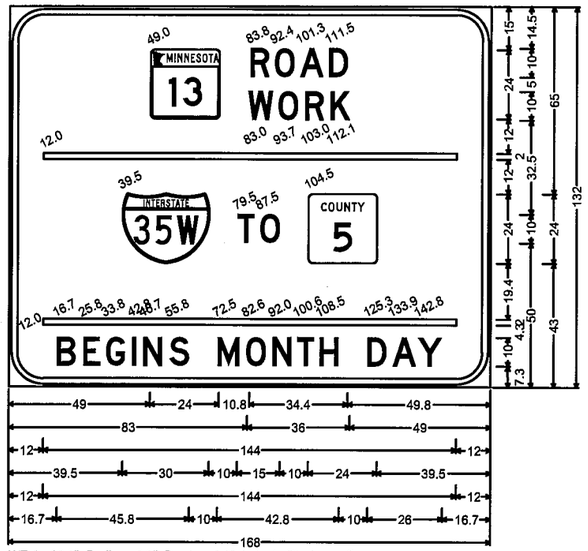

WZ-1; 12.0" Radius, 2.0" Border, 1.0" Indent, Black on Orange;
[ROAD] D; [WORK] D; [TO] D; [BEGINS MONTH DAY] D;

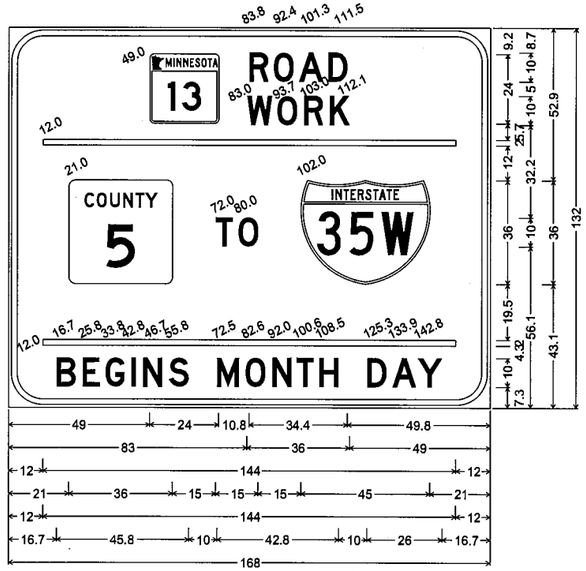

WZ-2; 12.0" Radius, 2.0" Border, 1.0" Indent, Black on Orange;
[ROAD] D; [WORK] D; [TO] D; [BEGINS MONTH DAY] D;

WZ-3; 12.0" Radius, 2.0" Border, 1.0" Indent, Black on Orange;
[ENDS FALL 2014] D;

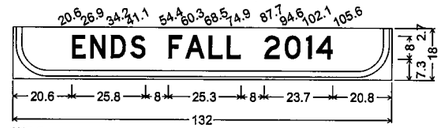

WZ-6;
12.0" Radius, 2.0" Border, 1.0" Indent, Black on Orange;
[ENDS FALL 2014] D;

SPECIAL SIGN DETAILS

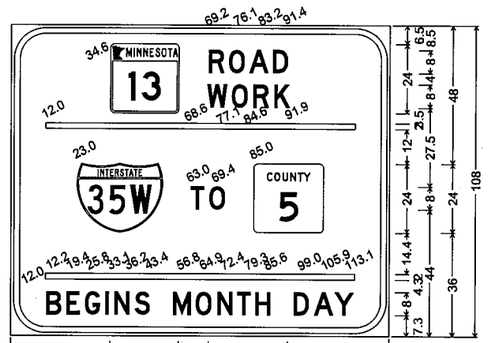

WZ-4;
12.0" Radius, 2.0" Border, 1.0" Indent, Black on Orange;
[ROAD] D; [WORK] D; [TO] D; [BEGINS MONTH DAY] D;

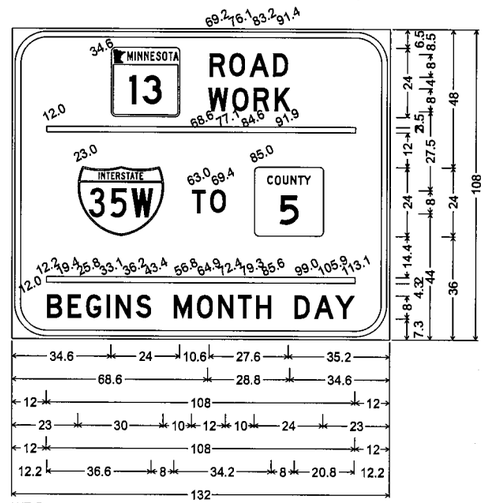

WZ-5;
12.0" Radius, 2.0" Border, 1.0" Indent, Black on Orange;
[ROAD] D; [WORK] D; [TO] D; [BEGINS MONTH DAY] D;

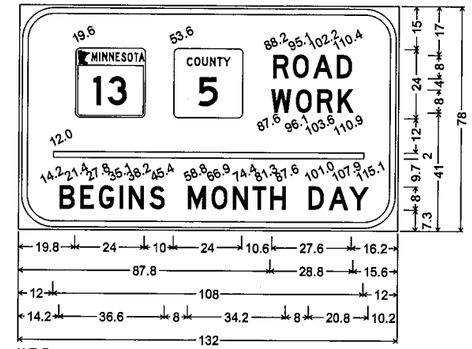

WZ-7;
12.0" Radius, 2.0" Border, 1.0" Indent, Black on Orange;
[ROAD] D; [WORK] D; [BEGINS MONTH DAY] D;

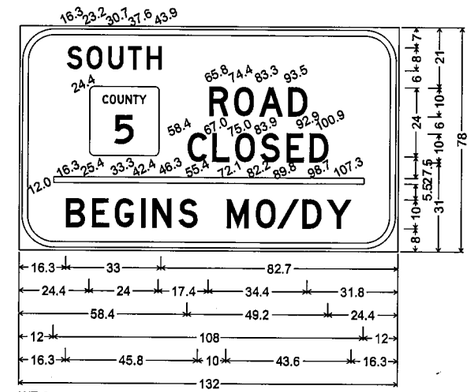

WZ-8;
12.0" Radius, 2.0" Border, 1.0" Indent, Black on Orange;
[SOUTH] D; [ROAD] D; [CLOSED] D; [BEGINS MO/DY] D;

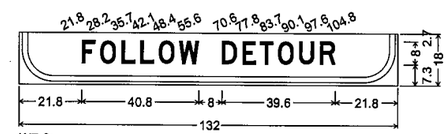

WZ-9;
12.0" Radius, 2.0" Border, 1.0" Indent, Black on Orange;
[FOLLOW DETOUR] D;

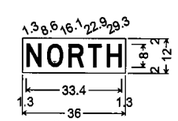

WZ-10;
No border, White on Orange;
[NORTH] Black D;

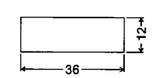

WZ-10A;
No border, White on Orange;

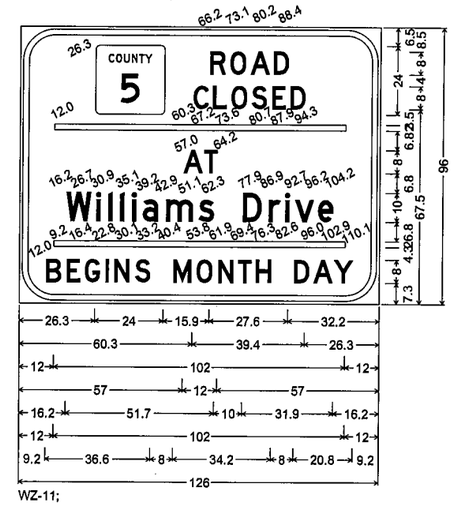

WZ-11;
12.0" Radius, 2.0" Border, 1.0" Indent, Black on Orange;
[ROAD] D; [CLOSED] D; [AT] D; [Williams Drive] D;
[BEGINS MONTH DAY] D;

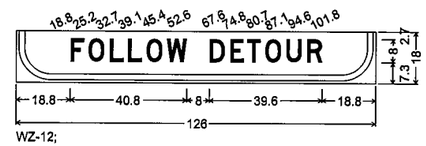

WZ-12;
12.0" Radius, 2.0" Border, 1.0" Indent, Black on Orange;
[FOLLOW DETOUR] D;

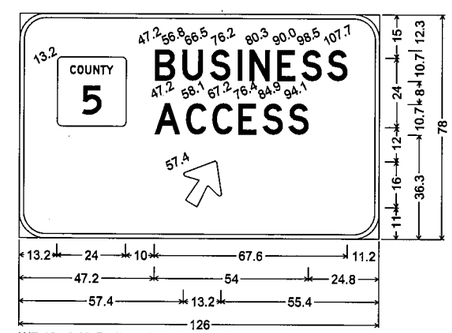

WZ-13; 9.0" Radius, 1.5" Border, Black on Orange;
[BUSINESS] D; [ACCESS] D; Arrow 6 - 17.0" 60°;

SP 179-020-031 SP 019-605-028

SPECIAL SIGN DETAILS

DRAWN BY: SNM	CHECKED BY: KF	CERTIFIED BY Tiffany J. Dagen LICENSED PROFESSIONAL ENGINEER	LIC. NO. 40535	DATE 6/14/2012	STATE PROJ. NO. 1901-148 (TH 13)	SHEET NO. TC81	OF TC84 SHEETS

PLOTTED/REVISED: 6/14/2012
DISTRICT #: METRO
IPLOT NAME: t_typicals_tc_tsh9
PATH & FILENAME: IP_PWPdl44345\t_typicals_tc_tsh.dgn

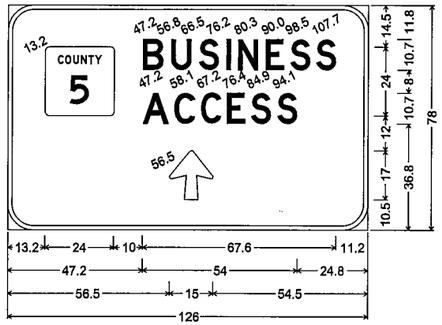

WZ-14; 9.0" Radius, 1.5" Border, Black on Orange;
[BUSINESS] D; [ACCESS] D; Arrow 6 - 17.0" 90°;

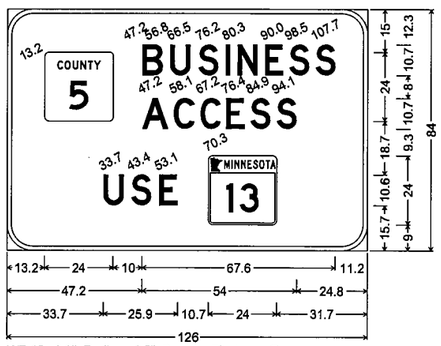

WZ-15; 9.0" Radius, 1.5" Border, Black on Orange;
[BUSINESS] D; [ACCESS] D; [USE] D;

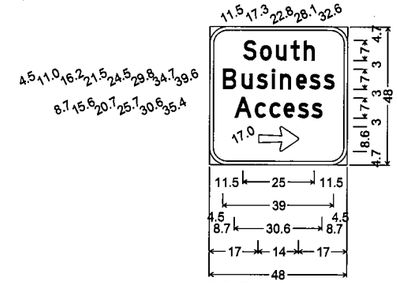

WZ-17;
6.0" Radius, 1.3" Border, Black on Orange;
[South] D;
[Business] D;
[Access] D;
Arrow 13 - 14.0" 0°;

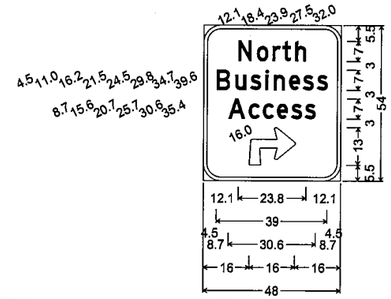

WZ-21;
6.0" Radius, 1.3" Border, Black on Orange;
[North] D;
[Business] D;
[Access] D;
90 Deg Advanced Turn Arrow 16.0" X 13.0";

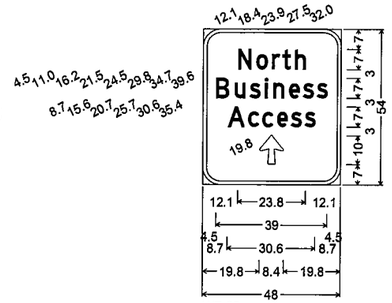

WZ-25;
6.0" Radius, 1.3" Border, Black on Orange;
[North] D;
[Business] D;
[Access] D;
Arrow 3 - 10.0" 90°;

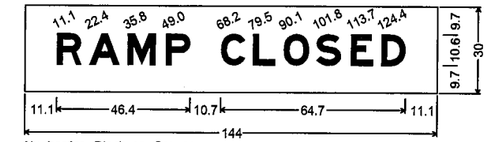

No border, Black on Orange;
[RAMP CLOSED] E Mod;
WZ-29;

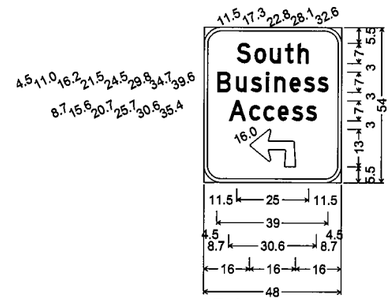

WZ-18;
6.0" Radius, 1.3" Border, Black on Orange;
[South] D;
[Business] D;
[Access] D;
90 Deg Advanced Turn Arrow 16.0" X 13.0";

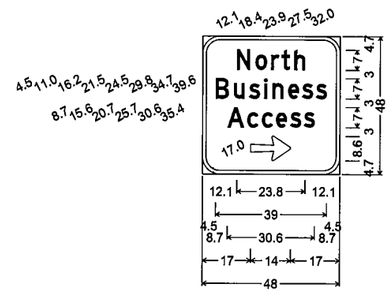

WZ-22;
6.0" Radius, 1.3" Border, Black on Orange;
[North] D;
[Business] D;
[Access] D;
Arrow 13 - 14.0" 0°;

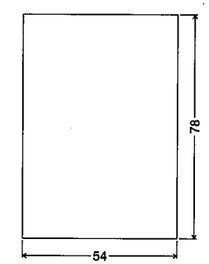

No border, Black on White;
WZ-26;

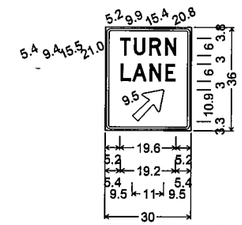

TURN LANE W/ARROW 30X36;
1.9" Radius, 0.8" Border, 0.5" Indent, Black on Orange;
[TURN] D;
[LANE] D;
Arrow 13 - 14.0" 45°;
WZ-31;

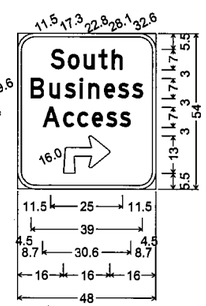

WZ-16;
6.0" Radius, 1.3" Border, Black on Orange;
[South] D;
[Business] D;
[Access] D;
90 Deg Advanced Turn Arrow 16.0" X 13.0";

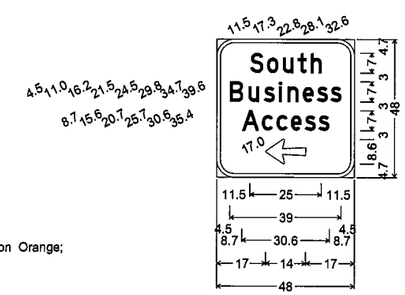

WZ-19;
6.0" Radius, 1.3" Border, Black on Orange;
[South] D;
[Business] D;
[Access] D;
Arrow 13 - 14.0" 180°;

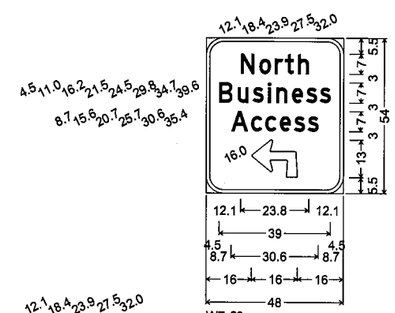

WZ-23;
6.0" Radius, 1.3" Border, Black on Orange;
[North] D;
[Business] D;
[Access] D;
90 Deg Advanced Turn Arrow 16.0" X 13.0";

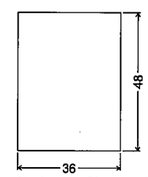

No border, Black on White;
WZ-27;

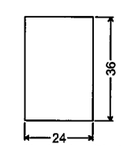

No border, Black on White;
WZ-30;

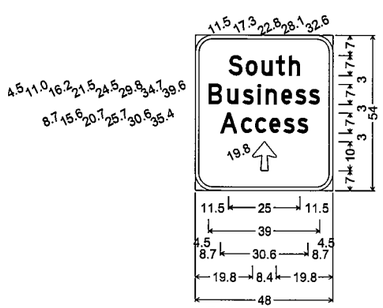

WZ-20;
6.0" Radius, 1.3" Border, Black on Orange;
[South] D;
[Business] D;
[Access] D;
Arrow 3 - 10.0" 90°;

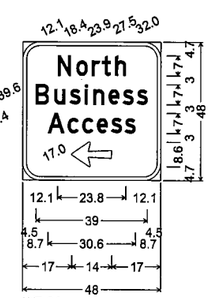

WZ-24;
6.0" Radius, 1.3" Border, Black on Orange;
[North] D;
[Business] D;
[Access] D;
Arrow 13 - 14.0" 180°;

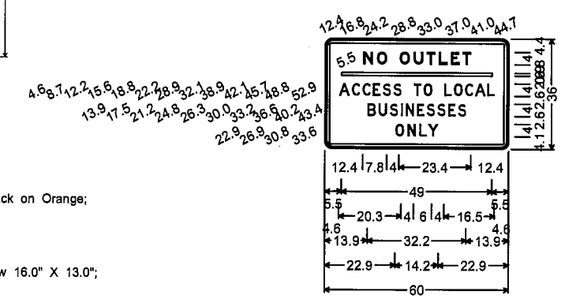

WZ-28;
2.3" Radius, 0.9" Border, 0.6" Indent, Black on White;
[NO OUTLET] E Mod;
[ACCESS TO LOCAL] D;
[BUSINESSES] D;
[ONLY] D Mod;

SP 179-020-031 SP 019-605-028

SPECIAL SIGN DETAILS

DRAWN BY: SNM	CHECKED BY: KF	CERTIFIED BY [signature] LICENSED PROFESSIONAL ENGINEER LIC. NO. 40535 DATE 6/14/2012	STATE PROJ. NO. 1901-148 (TH 13) SHEET NO. TC82 OF TC84 SHEETS

PLOTTED/REVISED: 6/14/2012
DISTRICT #: METRO
IPLOT NAME: 1_typicals_tc_tsh3
PATH & FILENAME: IP_PWP:dl44345\t_typicals_tc_tshdgn

INTERIM PAVEMENT MARKING

TWO LANE, TWO WAY

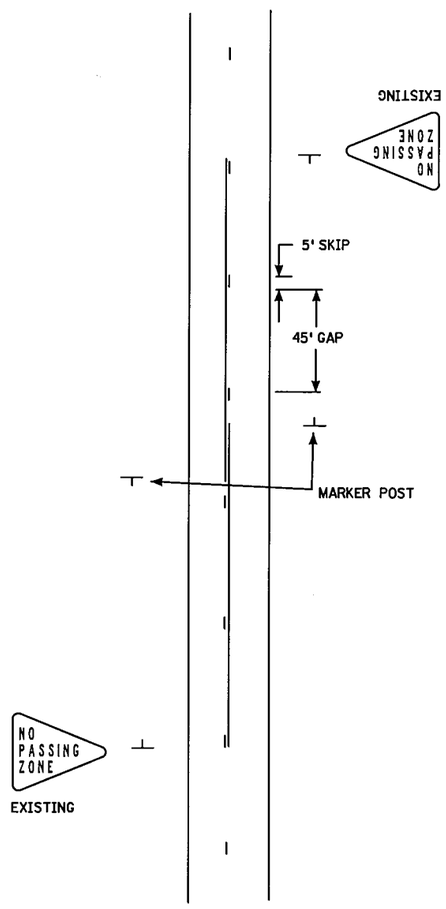

MULTI-LANE, DIVIDED

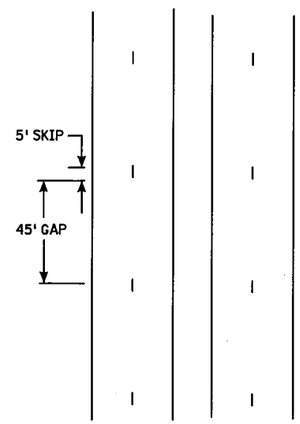

MULTI-LANE, UNDIVIDED

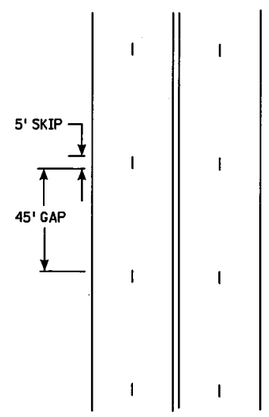

SIMULATING A SOLID LINE AND A BROKEN LINE (50 FOOT CYCLE) WITH TRPMS

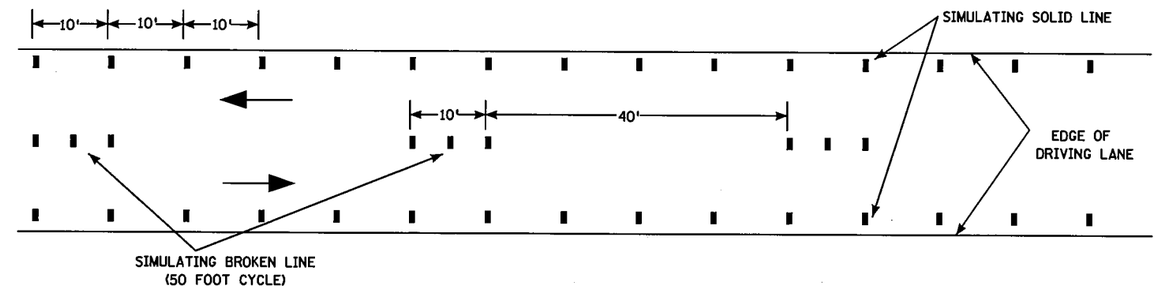

USING TRPM'S AS INTERIM PAVEMENT MARKING

WHEN TRPM'S ARE USED TO SIMULATE A LINE THE FOLLOWING GUIDELINE APPLIES:

SKIP STRIPE - USES 3 TRPM's PER 10' SKIP STRIPE ON 5' CENTERS WITH A 40' GAP

SOLID LINE - USES TRPM'S ON 10' CENTERS ON TANGENTS, FLATTER GRADES AND CURVES UNDER 6 DEGREES. FOR CURVES OVER 6 DEGREES AND STEEP GRADES, THIS SPACING SHALL BE REDUCED TO 5' CENTERS.

GENERAL NOTES:

SEE SPECIAL PROVISIONS FOR INTERIM PAVEMENT MARKING GUIDELINES

THESE INTERIM PAVEMENT MARKING GUIDELINES APPLY TO ALL TEMPORARY TRAFFIC CONTROL ZONES OF AT LEAST 300' IN LENGTH ON TANGENT AND 50' ON CURVES OF 6 DEGREES OR GREATER.

1. FOR ALL PROJECTS GREATER THAN 1.25 MILES IN LENGTH, INTERIM SKIP STRIPE PAVEMENT MARKINGS SHALL USE THE SAME CYCLE LENGTH AS FINAL PAVEMENT MARKINGS (50') AND SHALL BE A MINIMUM OF 5' LENGTH.

2. ON PROJECTS GREATER THAN 300' IN LENGTH, BUT LESS THAN 1.25 MILES IN LENGTH, THE INTERIM MARKING SHALL MATCH THE CYCLE LENGTH AT EITHER END OF THE PROJECT. THE INTERIM STRIPE SHALL BE 5' IN LENGTH.

ALL INTERIM MARKINGS SHALL BE PLACED PRIOR TO REMOVING LANE CLOSURE OR OPENING THE ROADWAY TO TRAFFIC.

GENERAL NOTES (CONTINUED):

FINAL MARKINGS AND ALL OTHER PAVEMENT MARKINGS INCLUDING EDGELINES, CHANNELIZING LINES, LANE REDUCTION TRANSITIONS, GORE MARKINGS AND OTHER LONGITUDINAL MARKINGS AND THE VARIOUS NON-LONGITUDINAL MARKINGS (STOP LINES, RAIL ROAD CROSSINGS, CROSSWALKS, WORDS, SYMBOLS, ETC) SHOULD BE PLACED WITHIN 14 CALENDAR DAYS.

NOTE: WHEN FINAL MARKINGS ARE TO BE EPOXY AND PAINT IS USED FOR INTERIM SOLID LINES, A 10 MIL THICK LAYER APPLICATION OF A WATER-BASED TRAFFIC MARKING PAINT SHALL BE USED. WITH A 10 MIL LAYER OF PAINT APPLIED, BEADS SHOULD BE APPLIED AT A RATE OF 6 LBS/GAL. REMOVAL OF THE 10 MIL LAYER OF PAINT IS NOT REQUIRED PRIOR TO PLACING THE EPOXY.

PLOTTED/REVISED: 6/14/2012

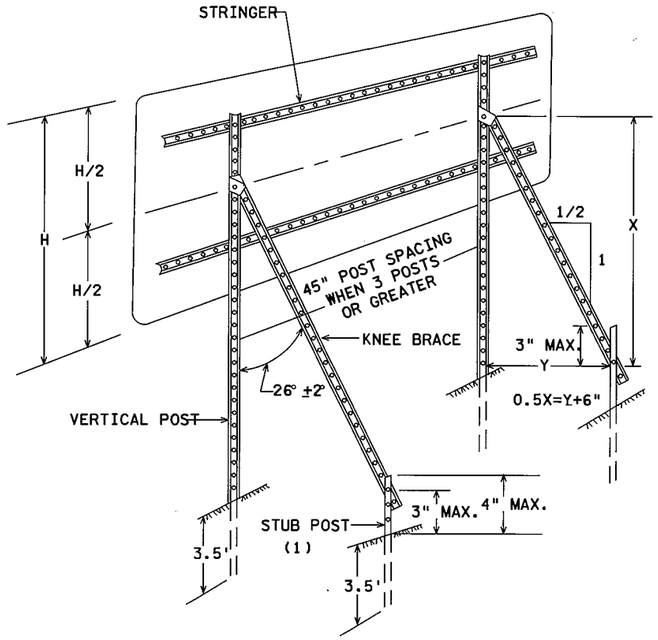

TYPICAL "A-FRAME" INSTALLATION
TYPE "D" SIGNS

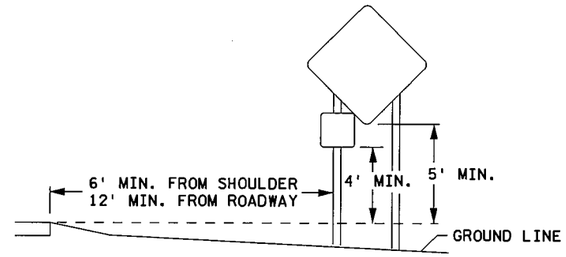

TYPICAL RURAL DESIGN

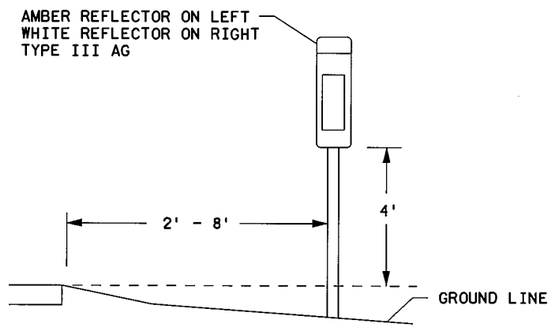

DELINEATION MOUNTING

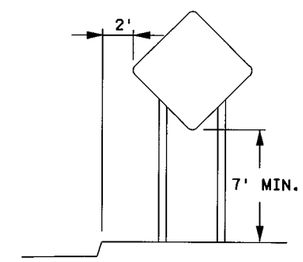

TYPICAL URBAN DESIGN

SIGN DATA

SIGNS TO BE INSTALLED ON DRIVEN U-POSTS SHALL BE INSTALLED IN ACCORDANCE WITH TABLE 1 OR TABLE 2 BELOW. SIGN PANELS SHALL BE INSTALLED ON SIGN STRUCTURES TO MEET THE MINIMUM 5 FEET DEPICTED ON THE TYPICAL RURAL DESIGN DETAIL, THE 7 FEET DEPICTED ON THE TYPICAL URBAN DESIGN DETAIL, OR MINIMUM 7 AND 9 FEET DEPICTED ON THE TYPICAL MOUNTING DETAIL ON THIS SHEET.

TABLE 1

STANDARD CONSTRUCTION SIGNS IN MN/DOT STANDARD SIGNS MANUAL

PANEL SIZE (IN.)	POSTS			
	NO. & TYPE	SPACING (IN.)	KNEE BRACES QUANT.	LENGTH (FT.)
24 x 24	2-U	18		13
30 x 24	2-U	18		13
36 x 30	2-U	24		13
36 x 36	2-U	18		14
42 x 36	2-U	30		14
48 x 48	2-U	30		15
60 x 60	2-U	42	1	16
72 x 72	2-U	42	2	17
96 x 54	2-U	54	2	16
168 x 132	4-U	48	4	20

GENERAL NOTES:
1. POST LENGTHS ARE APPROXIMATE AND INCLUDE EMBEDMENT, BUT DO NOT INCLUDE ADDITIONAL LENGTH REQUIRED FOR SPLICE.
2. SEE STANDARD SIGNS MANUAL FOR PUNCHING HOLES.

TABLE 2

SPECIAL DESIGN CONSTRUCTION SIGNS

PANEL SIZE		POSTS			
LENGTH (IN.)	HEIGHT (IN.)	NO. & TYPE	SPACING (IN.)	KNEE BRACES QUANT.	LENGTH (FT.)
54 - 96	78	2-U	42	2	20
102 - 138	78	3-U	45	3	20
144 - 180	78	4-U	45	4	20

DESIGNER NOTE:

INCLUDE SPECIAL SIGN DETAILS IN THE TRAFFIC CONTROL PLAN IN TABLE TWO.

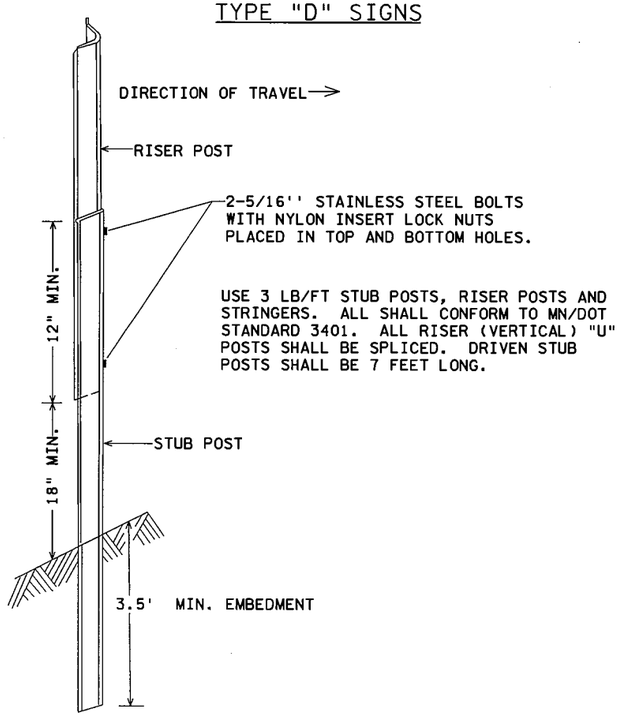

"U" POST SPLICE

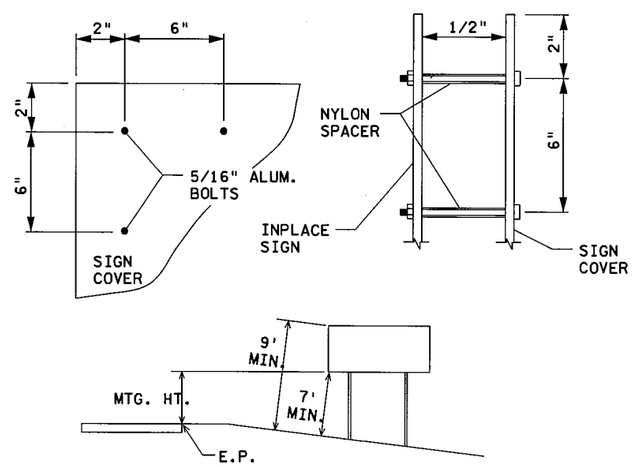

TYPICAL MOUNTING

(1) OFFSET STUB POST 1' TOWARD ROADWAY RELATIVE TO VERTICAL POST.

NOTES:

FOR TEMPORARY CONSTRUCTION SIGN FRAMING, THE CONTRACTOR MAY USE GRADE 5 ZINC PLATED BOLTS FOR ALL BOLTED CONNECTIONS, EXCEPT FOR THE KNEE BRACE CONNECTION TO THE REAR STUB POST, WHICH SHALL UTILIZE A 5/16 INCH STAINLESS STEEL BOLT AND NYLON INSERT LOCK NUT. ADDITIONAL SIGN FRAMING DETAILS CAN BE FOUND IN THE TRAFFIC ENGINEERING MANUAL PART 6.

IF THE CONTRACTOR ELECTS TO USE SOME OTHER TYPE OF SIGN SUPPORT (OTHER THAN U-CHANNEL SIGN POSTS) FOR MOUNTING CONSTRUCTION SIGNS, DETAILS OF THE PROPOSED SIGN STRUCTURE SHALL BE SUBMITTED TO THE ENGINEER FOR APPROVAL PRIOR TO ORDERING THE SIGN STRUCTURE COMPONENTS. ANY SIGN STRUCTURE TO BE SUBMITTED TO THE ENGINEER SHALL BE AN FHWA ACCEPTED BREAKAWAY SIGN SUPPORT. SIGN STRUCTURE SHALL ALSO BE APPROVED FOR 90 MPH WIND LOAD.

SIGNS SHOWN TO BE COVERED SHALL BE COVERED WITH THE SAME COLOR AS THE SIGN BACKGROUND. THE CONTRACTOR SHALL INSTALL COVERS OR ADDITIONAL SIGNS USING A MINIMUM 1/2" NYLON SPACER BETWEEN THE INPLACE SIGN AND THE COVERING MATERIAL. HOLES WILL BE DRILLED IN THE COVER AND THE INPLACE SIGN AND SHALL BE INSTALLED IN ACCORDANCE TO THE SIGN PANEL DETAIL. SPACERS ARE REQUIRED. MID-PANEL SPACING SHALL BE NO GREATER THAN 24".

TYPICAL TEMPORARY SIGN FRAMING AND INSTALLATION DETAILS

SP 179-020-031 SP 019-605-028

4/28/06 LAYOUT 20.DGN

DRAWN BY: SNM	CHECKED BY: KF	CERTIFIED BY [signature] LICENSED PROFESSIONAL ENGINEER LIC. NO. 40535 DATE 6/14/2012	TRAFFIC CONTROL
			STATE PROJ. NO. 1901-148 (TH 13) SHEET NO. TC84 OF TC84 SHEETS

PERMANENT PAVEMENT MARKING PLAN

NOTES & GUIDELINES

GENERAL INFORMATION:

THE ENGINEER'S INVOLVEMENT IN THE APPLICATION OF THE MATERIAL SHALL BE LIMITED TO FIELD CONSULTATION AND INSPECTION. THE CONTRACTOR WILL PLACE NECESSARY "SPOTTING" AT APPROPRIATE POINTS TO PROVIDE HORIZONTAL CONTROL FOR STRIPING AND TO DETERMINE NECESSARY STARTING AND CUTOFF POINTS. LONGITUDINAL JOINTS, PAVEMENT EDGES AND EXISTING MARKINGS MAY SERVE AS HORIZONTAL CONTROL WHEN SO DIRECTED.

EDGE LINES AND LANE LINES ARE TO BE BROKEN ONLY AT INTERSECTIONS WITH PUBLIC ROADS AND AT PRIVATE ENTRANCES IF THEY ARE CONTROLLED BY A YIELD SIGN, STOP SIGN OR TRAFFIC SIGNAL. THE BREAK POINT IS TO BE AT THE START OF THE RADIUS FOR THE INTERSECTION OR AT MARKED STOP LINES OR CROSSWALKS.

A TOLERANCE OF 1/4 INCH UNDER OR 1/4 INCH OVER THE SPECIFIED WIDTH WILL BE ALLOWED FOR STRIPING PROVIDED THE VARIATION IS GRADUAL AND DOES NOT DETRACT FROM THE GENERAL APPEARANCE. BROKEN LINE SEGMENTS MAY VARY UP TO ONE-HALF FOOT FROM THE SPECIFIED LENGTHS PROVIDED THE OVER AND UNDER VARIATIONS ARE REASONABLY COMPENSATORY. ALIGNMENT DEVIATIONS FROM THE CONTROL GUIDE SHALL NOT EXCEED 1 INCH. MATERIAL SHALL NOT BE APPLIED OVER LONGITUDINAL JOINTS. ESTABLISHMENT OF APPLICATION TOLERANCES SHALL NOT RELIEVE THE CONTRACTOR OF THEIR RESPONSIBILITY TO COMPLY AS CLOSELY AS PRACTICABLE WITH THE PLANNED DIMENSIONS.

EPOXY:

THE ROAD SURFACE SHALL BE CLEANED AT THE DIRECTION OF THE ENGINEER JUST PRIOR TO APPLICATION. PAVEMENT CLEANING SHALL CONSIST OF AT LEAST BRUSHING WITH A ROTARY BROOM (NON-METALLIC) OR AS RECOMMENDED BY THE MATERIAL MANUFACTURER AND ACCEPTABLE TO THE ENGINEER. NEW PORTLAND CEMENT CONCRETE SURFACES SHALL BE SANDBLAST CLEANED TO REMOVE ANY SURFACE TREATMENTS AND/OR LAITANCE. ON LOW SPEED (SPEED LIMIT 35 OR LESS) URBAN PORTLAND CEMENT CONCRETE ROADWAYS, SANDBLAST CLEANING SHALL BE USED FOR ALL EPOXY PAVEMENT MARKINGS.

THE EPOXY MARKING APPLICATION SHALL IMMEDIATELY FOLLOW THE PAVEMENT CLEANING. GLASS BEADS SHALL BE APPLIED IMMEDIATELY AFTER APPLICATION OF THE EPOXY RESIN LINE TO PROVIDE AN IMMEDIATE NO-TRACK SYSTEM.

FOR 15 MIL APPLICATIONS, GLASS BEADS SHALL BE APPLIED AT A RATE OF AT LEAST 25 LB/GAL. THE "NO-TRACKING" CONDITION SHALL BE DETERMINED ON AN APPLICATION OF SPECIFIED THICKNESS TO THE PAVEMENT AND COVERED WITH GLASS BEADS AT THE RATE OF AT LEAST 25 LB/GAL.

OPERATIONS SHALL BE CONDUCTED ONLY WHEN THE ROAD PAVEMENT SURFACE TEMPERATURES ARE 50 DEGREES °F OR GREATER.

PERMANENT PAVEMENT MARKINGS SHALL NOT BE PLACED OVER TEMPORARY TAPE MARKINGS.

POLY PREFORM INLAY APPLICATION:

MAT TEMPERATURE SHALL BE CHECKED USING A THERMOMETER TO MAKE SURE THE INLAY IS BEING DONE IN THE PROPER TEMPERATURE RANGE. THE TEMPERATURE SHOULD MEASURE BETWEEN 150° F (ASPHALT FIRM ENOUGH TO WALK ON) AND 120° F. APPLICATION BELOW 120° F MAY NOT GET A PROPER INLAY. INLAYS ARE NOT RECOMMENDED AFTER SEPTEMBER 15th AS THE ASPHALT COOLS TOO FAST AT THIS TIME OF THE YEAR.

NO PRIMERS ARE USED FOR INLAY APPLICATION. DO NOT INSTALL LANE LINES ON AN ASPHALT SEAM. ROLLING OF ALL THE MARKINGS SHOULD BE LENGTHWISE IN THE DIRECTION THEY WERE LAID. FOR CROSSWALKS AND STOP BARS, INITIAL TAMPING WITH THE TAMPING CART IS RECOMMENDED USING ONLY 100 LBS. OF WEIGHT.

USE COMPACTION ROLLER TO EMBED (INLAY) MARKINGS INTO PAVEMENT SURFACE. USE MINIMUM SPEED AND WATER ON ROLLER. DO NOT USE VIBRATOR. IF MARKING BUCKLES OR DISTORTS SEVERELY IN FRONT OF ROLLER, MAT TEMPERATURE OR ROLLER SPEED MAY BE TOO HIGH.

POLY PREFORM GROOVED APPLICATION:

CONCRETE PAVEMENT SURFACES AND BITUMINOUS PAVEMENT SURFACES WHERE PAVEMENT MARKINGS CANNOT BE INLAID IN THE HOT MAT, SHALL BE GROOVED FOR THE INSTALLATION OF DURABLE REFLECTORIZED PAVEMENT MARKINGS. SEE SPECIAL PROVISIONS.

PAVEMENT MARKING TABULATION

PAY ITEM	UNIT	INTERCHANGE FUNDS	SP 179-020-031	100% STATE FUNDS	PM TOTAL
PAVT MSSG (LT ARROW) POLY PREF	EACH	2			2
PAVT MSSG (LT ARROW) POLY PREF-GR IN	EACH	2			2
PAVT MSSG (RT ARROW) POLY PREF-GR IN	EACH	3			3
PAVT MSSG(LT-THRU ARROW)POLY PREF-GR IN	EACH	2			2
PAVT MSSG (LT ARROW) EPOXY	EACH	11	5		16
PAVT MSSG (RT ARROW) EPOXY	EACH	10	2		12
PAVT MSSG (RT-THRU ARROW) EPOXY	EACH	1			1
4" SOLID LINE WHITE-POLY PREF (GR IN)	LIN FT	777			777
11" SOLID LINE WHITE-POLY PREF (GR IN)	LIN FT	1,832		796	2,628
24" SOLID LINE WHITE-POLY PREF (GR IN)	LIN FT	50			50
7" BROKEN LINE WHITE-POLY PREF (GR IN)	LIN FT	2,090		620	2,710
7" DOTTED LINE WHITE-POLY PREFORM (GROUND IN)	LIN FT	51			51
11" DOTTED LINE WHITE-POLY PREF (GR IN)	LIN FT	597		36	633
4" SOLID LINE WHITE-EPOXY	LIN FT	7,402	2,015		9,417
8" SOLID LINE WHITE-EPOXY	LIN FT	259			259
4" BROKEN LINE WHITE-EPOXY	LIN FT	710	170		880
4" DOTTED LINE WHITE-EPOXY	LIN FT	18	3		21
8" DOTTED LINE WHITE-EPOXY	LIN FT	120			120
4" SOLID LINE YELLOW-EPOXY	LIN FT	3,876	977		4,853
4" DOUBLE SOLID LINE YELLOW-EPOXY	LIN FT	6,237			6,237
4" SOLID LINE WHITE-EPOXY (GROUND IN)	LIN FT	14,002		3,076	17,078
8" SOLID LINE WHITE-EPOXY (GROUND IN)	LIN FT	79			79
4" SOLID LINE YELLOW-EPOXY (GROUND IN)	LIN FT	13,282		3,082	16,364
CROSSWALK MARKING-POLY PREFORM	SQ FT	54			54
CROSSWALK MARKING-EPOXY	SQ FT	1,476	504		1,980

PERMANENT PAVEMENT MARKING PLAN INDEX

PM1 PERM PAVEMENT MARKING TITLE AND TABULATION SHEET
PM2-PM8 DETAILS
PM9-PM14 TYPICALS

SYMBOLS & MATERIALS LEGEND

CROSSWALK BLOCK WHITE-POLY PREFORM

PAVEMENT MESSAGE (LEFT ARROW) POLY PREFORM

STRIPING KEY

CIRCLE - EPOXY

SQUARE - POLY PREFORM

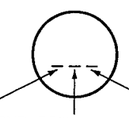

1ST DIGIT — WIDTH — 4", 8", ETC.

2ND DIGIT — PATTERN — S - SOLID; B - BROKEN; D - DOTTED/DOUBLE

3RD DIGIT — COLOR — W - WHITE; Y - YELLOW; B - BLACK

EXAMPLE: (4SW) = 4" SOLID LINE WHITE - EPOXY

I HEREBY CERTIFY THAT SHEETS PM1 THROUGH PM14 OF THIS PLAN WERE PREPARED BY ME OR UNDER MY DIRECT SUPERVISION AND THAT I AM A DULY LICENSED PROFESSIONAL ENGINEER UNDER THE LAWS OF THE STATE OF MINNESOTA.

PRINT NAME: TIFFANY J DAGON LICENSE # 40535

DATE: 6/12/2012 SIGNATURE: Tiffany J. Dagon

DESIGNER SCOTT MEIER

TITLE:

PERMANENT PAVEMENT MARKING
TITLE SHEET
SP 179-020-031 SP 019-605-028

STATE PROJ. NO. 1901-148 (TH 13) SHEET NO PM1 OF PM14 SHEETS

PLOTTED/REVISED: 6/12/2012
DISTRICT #: METRO
IPLOT NAME: t_typicals_pm_tsh
PATH & FILENAME: IP_PWPdl443450\t_typicals_pm_tshdgn

PLOTTED/REVISED: 6/13/2012

DISTRICT #: METRO
IPLOT NAME: 1901-148pml
PATH & FILENAME: IP_PWP-dl1443450\1901-148pm.dgn

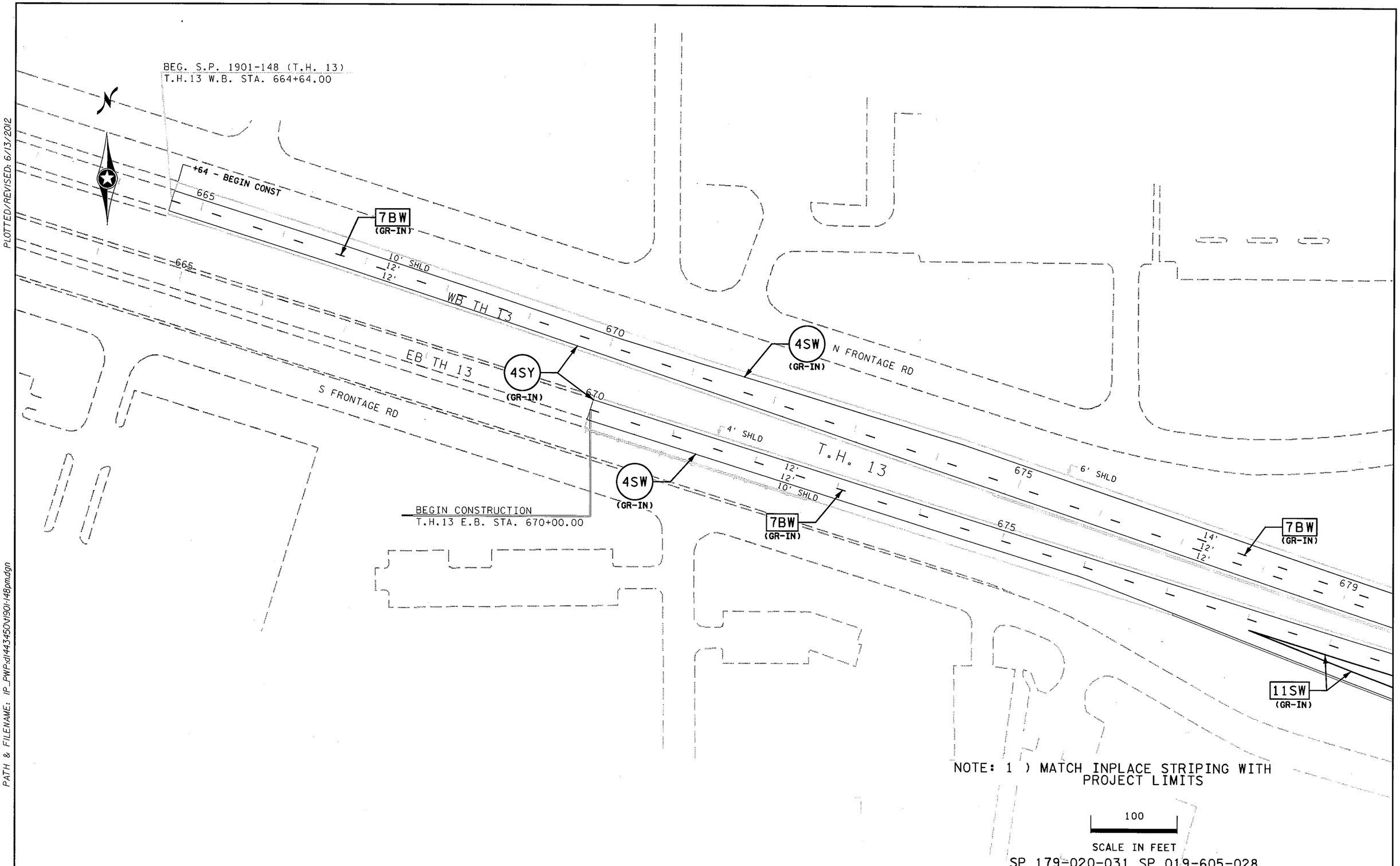

SP 179-020-031 SP 019-605-028

DRAWN BY: SNM	CHECKED BY: HG	CERTIFIED BY _____ LICENSED PROFESSIONAL ENGINEER	LIC. NO. 40535	DATE 6/13/2012

PERMANENT PAVEMENT MARKING

STATE PROJ. NO. 1901-148 (TH 13) SHEET NO. PM2 OF PM14 SHEETS

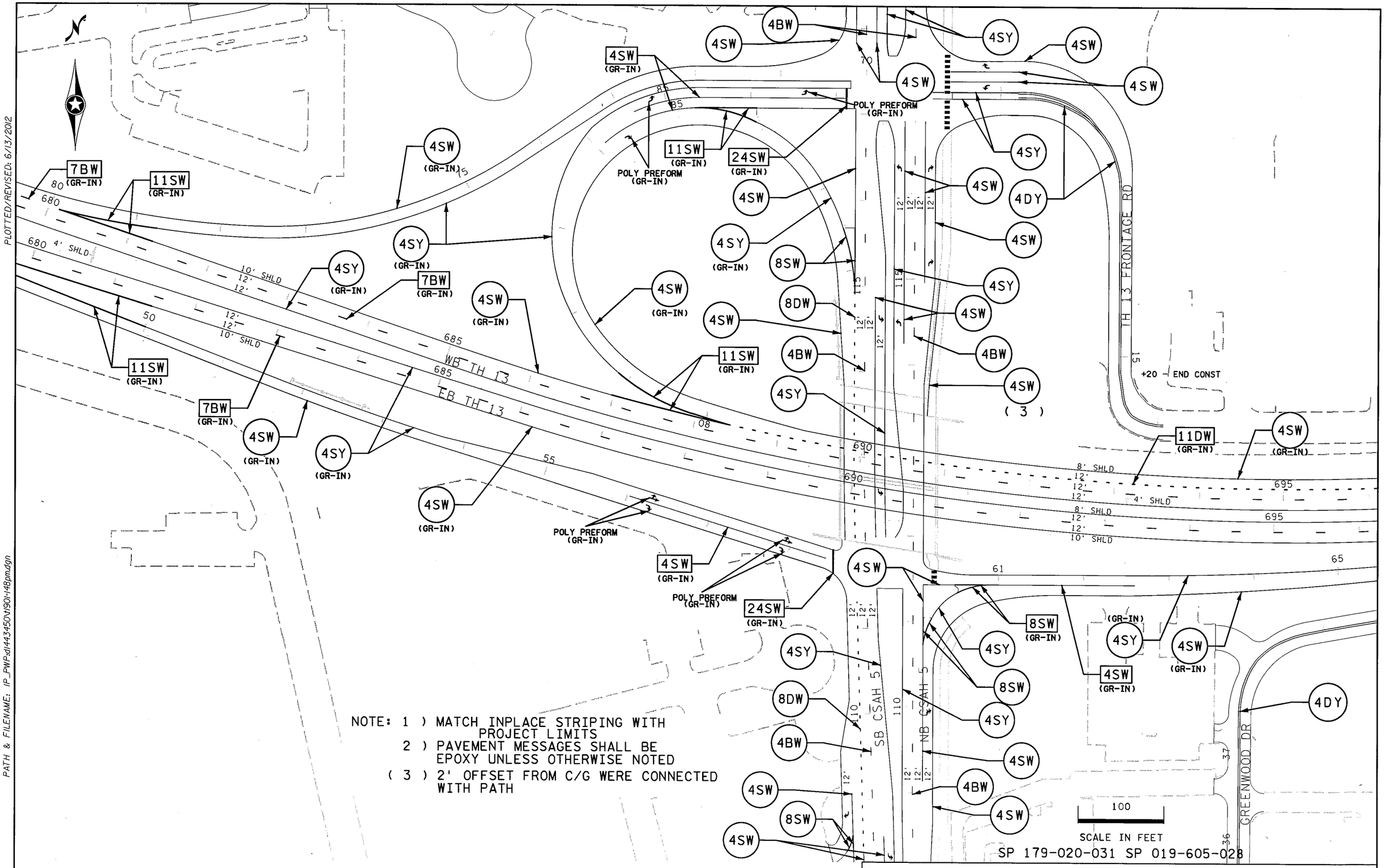

NOTE: 1) MATCH INPLACE STRIPING WITH PROJECT LIMITS
2) PAVEMENT MESSAGES SHALL BE EPOXY UNLESS OTHERWISE NOTED
(3) 2' OFFSET FROM C/G WERE CONNECTED WITH PATH

PLOTTED/REVISED: 6/13/2012

DISTRICT #: METRO
IPLOT NAME: 1190I-148pm3
PATH & FILENAME: IP_PWP:dl443450\1190I-148pm.dgn

PERMANENT PAVEMENT MARKING

DRAWN BY: SNM	CHECKED BY: HG	CERTIFIED BY _____ LICENSED PROFESSIONAL ENGINEER	LIC. NO. 40535	DATE 6/13/2012	STATE PROJ. NO. 1901-148 (TH 13)	SHEET NO. PM3	OF PM14 SHEETS

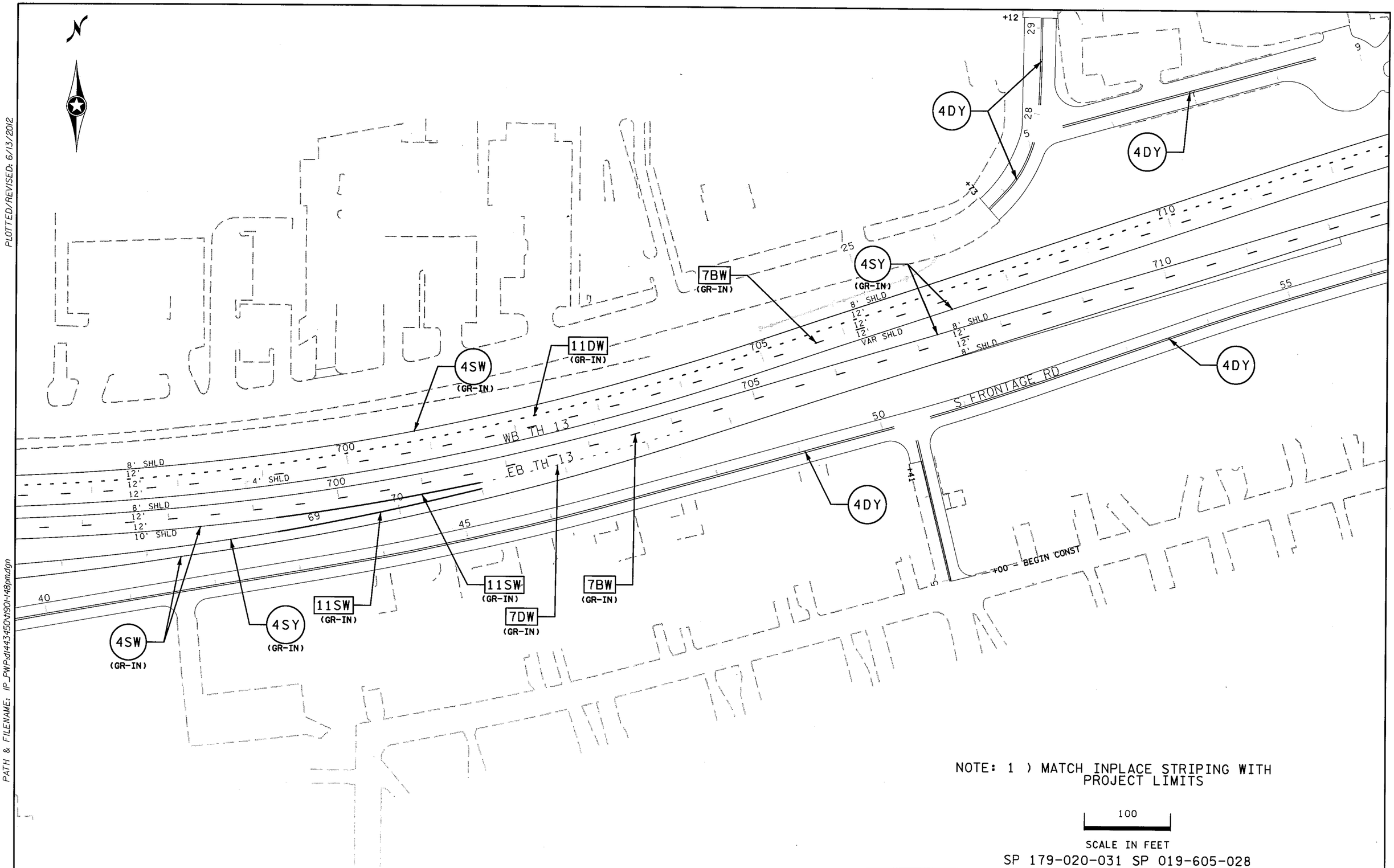

NOTE: 1) MATCH INPLACE STRIPING WITH PROJECT LIMITS

100

SCALE IN FEET

SP 179-020-031 SP 019-605-028

PERMANENT PAVEMENT MARKING

DRAWN BY: SNM	CHECKED BY: HG	CERTIFIED BY _____ LICENSED PROFESSIONAL ENGINEER	LIC. NO. 40535	DATE 6/13/2012	STATE PROJ. NO. 1901-148 (TH 13)	SHEET NO. PM4	OF PM14 SHEETS

PLOTTED/REVISED: 6/13/2012

DISTRICT #: METRO
IPLOT NAME: 1190I-148pm4
PATH & FILENAME: IP_PWP:dl443450\1190I-148pm.dgn

PLOTTED/REVISED: 6/13/2012

DISTRICT *: METRO
IPLOT NAME: 1190I-148pm5
PATH & FILENAME: IP_PWP:dl443450\1901-148pm.dgn

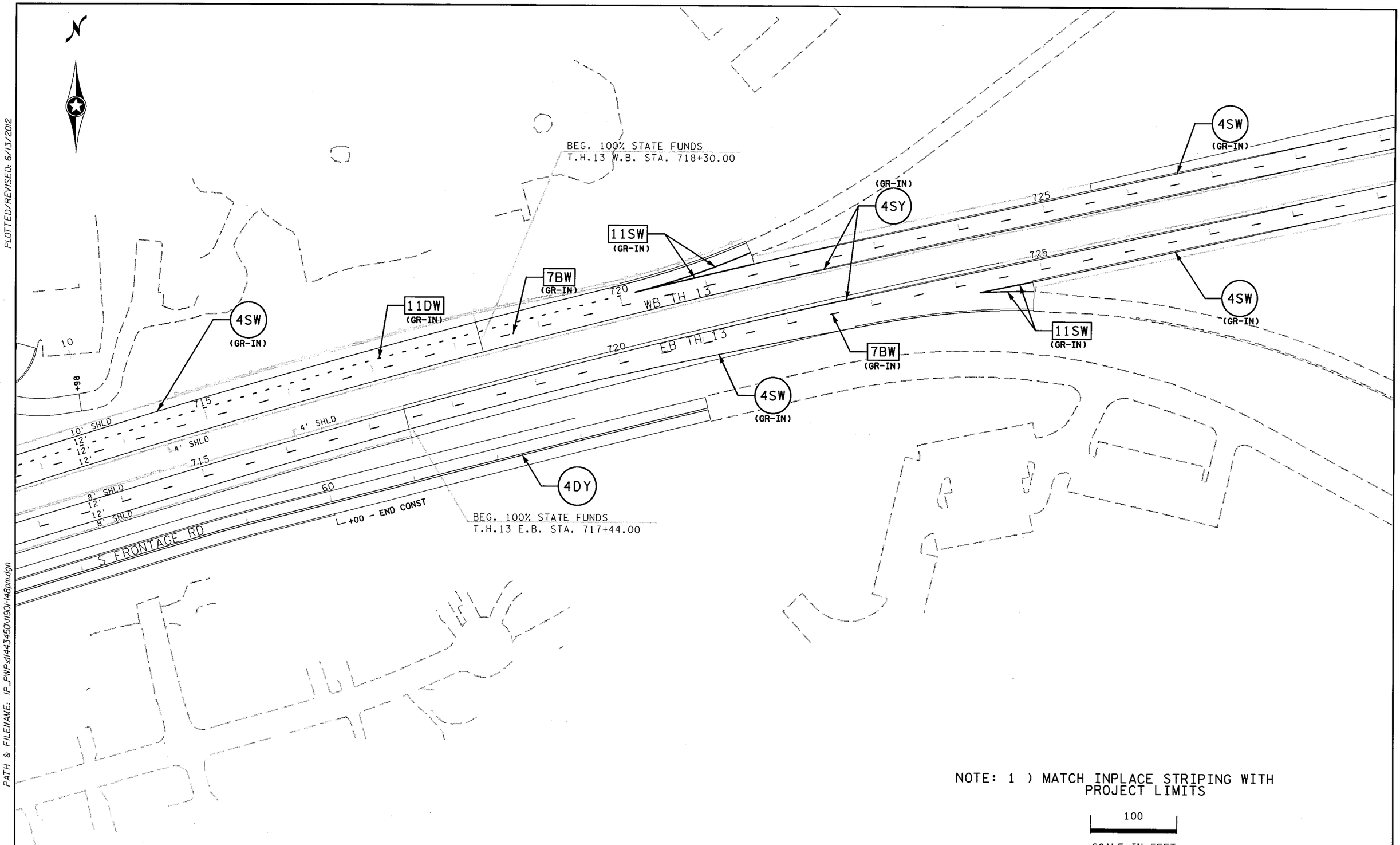

NOTE: 1) MATCH INPLACE STRIPING WITH PROJECT LIMITS

100

SCALE IN FEET

SP 179-020-031 SP 019-605-028

PERMANENT PAVEMENT MARKING

DRAWN BY: SNM	CHECKED BY: HG	CERTIFIED BY _____ LICENSED PROFESSIONAL ENGINEER	LIC. NO. 40535	DATE 6/13/2012	STATE PROJ. NO. 1901-148 (TH 13)	SHEET NO. PM5	OF PM14 SHEETS

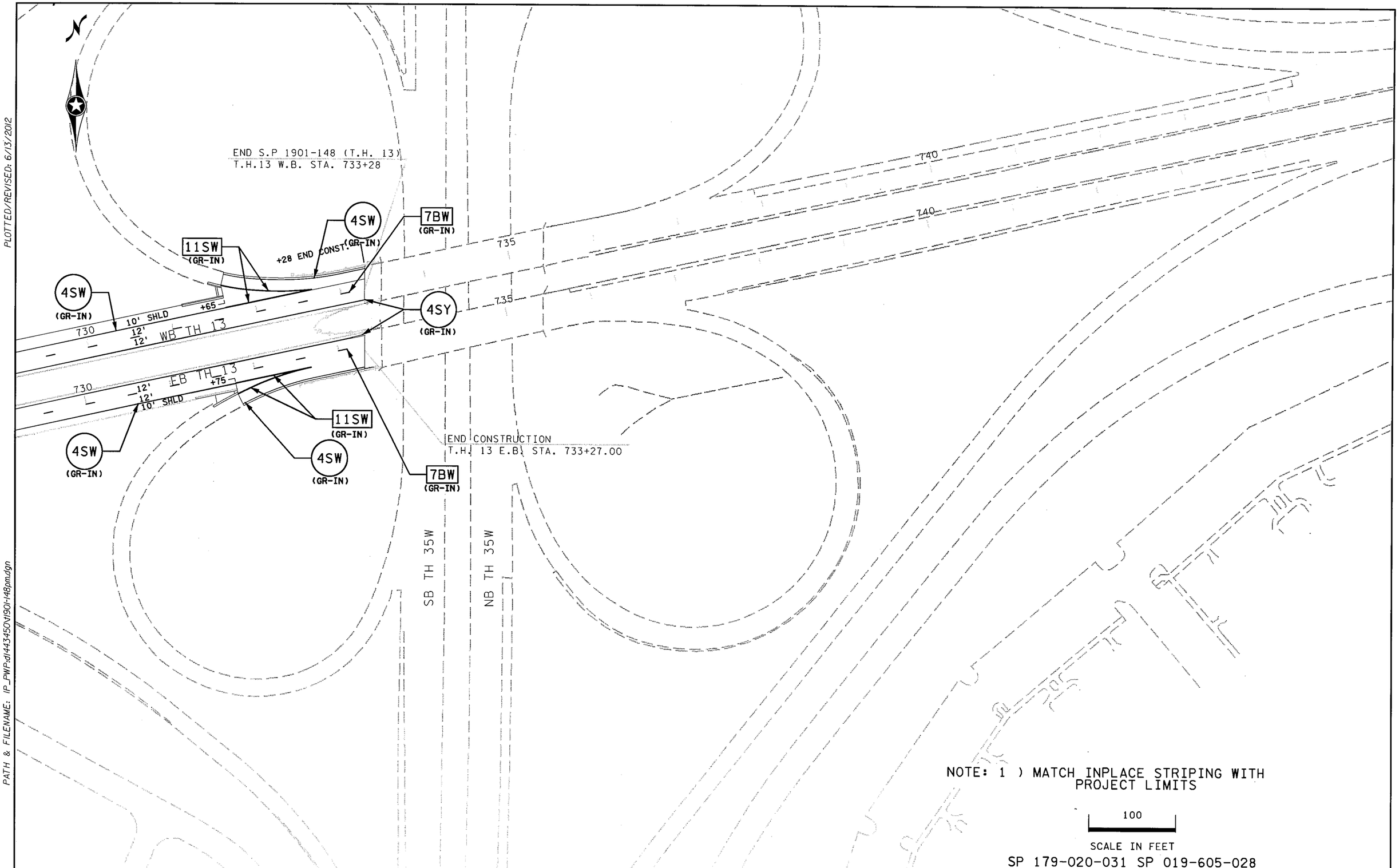

NOTE: 1) MATCH INPLACE STRIPING WITH PROJECT LIMITS

100

SCALE IN FEET

SP 179-020-031 SP 019-605-028

PERMANENT PAVEMENT MARKING

DRAWN BY: SNM	CHECKED BY: HG	CERTIFIED BY _____ LICENSED PROFESSIONAL ENGINEER	LIC. NO. 40535	DATE 6/13/2012	STATE PROJ. NO. 1901-148 (TH 13)	SHEET NO. PM6	OF PM14 SHEETS

PLOTTED/REVISED: 6/13/2012

DISTRICT *: METRO
IPLOT NAME: t1901-148pm6
PATH & FILENAME: IP_PWP:dl443450\t1901-148pm.dgn

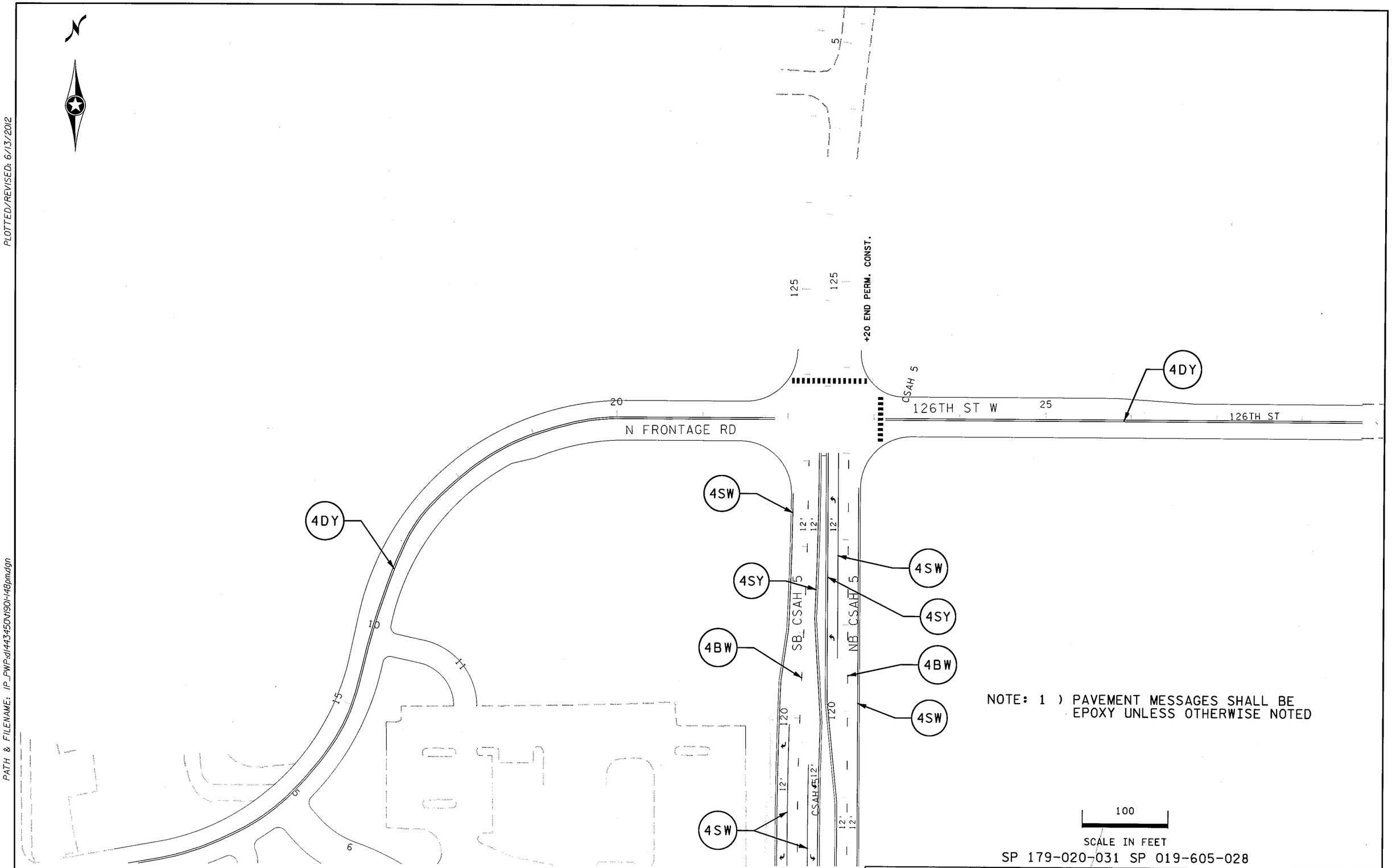

NOTE: 1) PAVEMENT MESSAGES SHALL BE EPOXY UNLESS OTHERWISE NOTED

SP 179-020-031 SP 019-605-028

PLOTTED/REVISED: 6/13/2012

DISTRICT #: METRO
IPLOT NAME: t1901-148pm7
PATH & FILENAME: IP_PWP:d1443450\t1901-148pm.dgn

DRAWN BY: SNM	CHECKED BY: HG	CERTIFIED BY [signature] LICENSED PROFESSIONAL ENGINEER	LIC. NO. 40535	DATE 6/13/2012

PERMANENT PAVEMENT MARKING

STATE PROJ. NO. 1901-148 (TH 13) SHEET NO. PM7 OF PM14 SHEETS

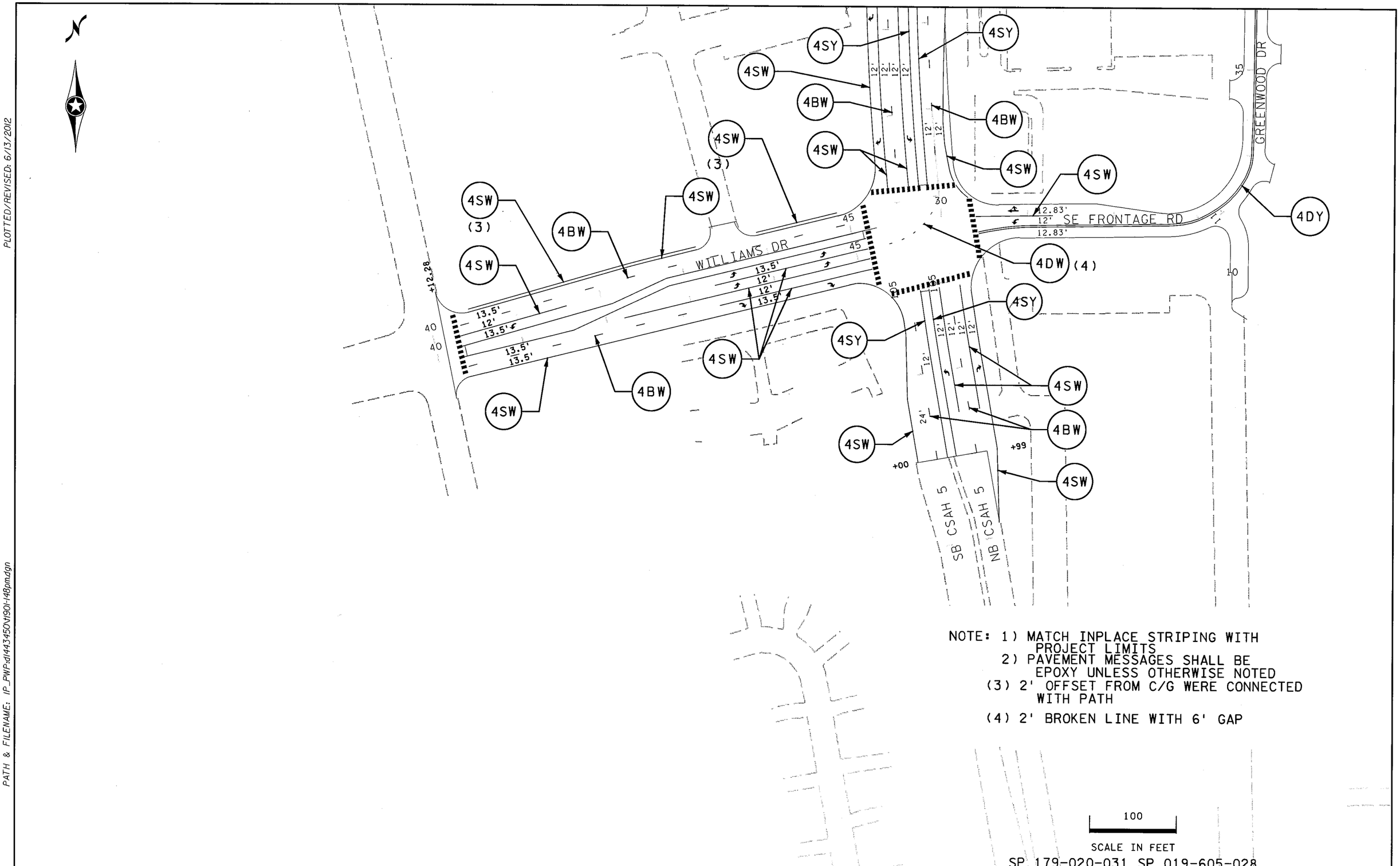

NOTE: 1) MATCH INPLACE STRIPING WITH PROJECT LIMITS
2) PAVEMENT MESSAGES SHALL BE EPOXY UNLESS OTHERWISE NOTED
(3) 2' OFFSET FROM C/G WERE CONNECTED WITH PATH
(4) 2' BROKEN LINE WITH 6' GAP

100
SCALE IN FEET

SP 179-020-031 SP 019-605-028

PERMANENT PAVEMENT MARKING

DRAWN BY: SNM	CHECKED BY: HG	CERTIFIED BY _____ LICENSED PROFESSIONAL ENGINEER	LIC. NO. 40535	DATE 6/13/2012	STATE PROJ. NO. 1901-148 (TH 13)	SHEET NO. PM8	OF PM14 SHEETS

PLOTTED/REVISED: 6/13/2012

DISTRICT #: METRO
IPLOT NAME: 1190I-148pm8
PATH & FILENAME: IP_PW:P:d1443450\1190I-148pm.dgn

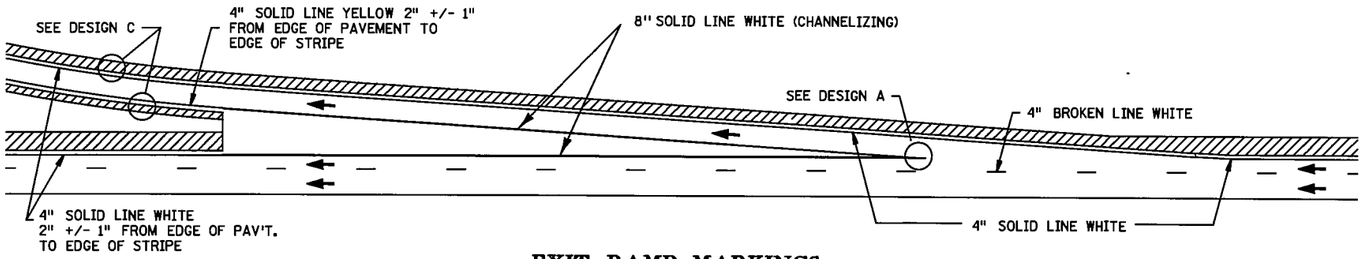

EXIT RAMP MARKINGS

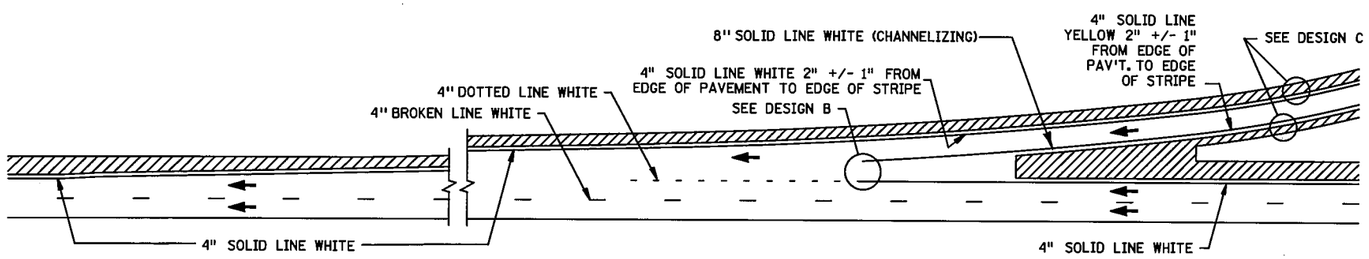

TAPERED ACCELERATION LANE

WHITE HOV PAVEMENT MARKER

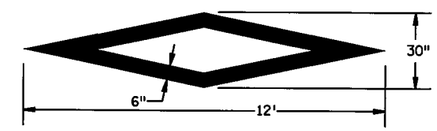

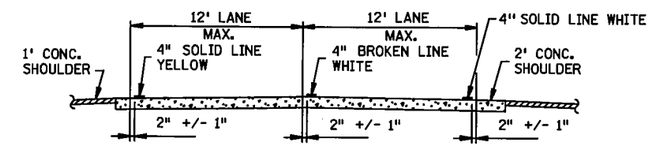

SECTION A-A
(TWO LANES)

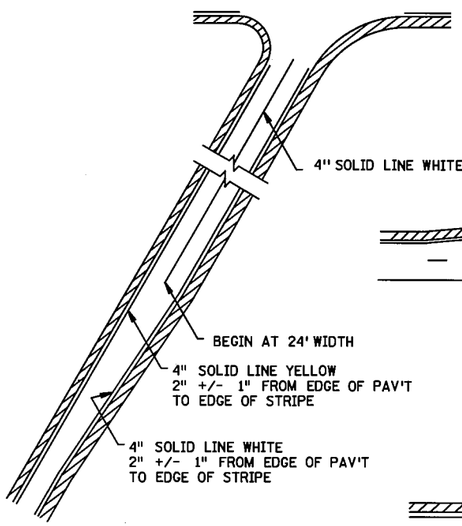

RAMP MARKINGS

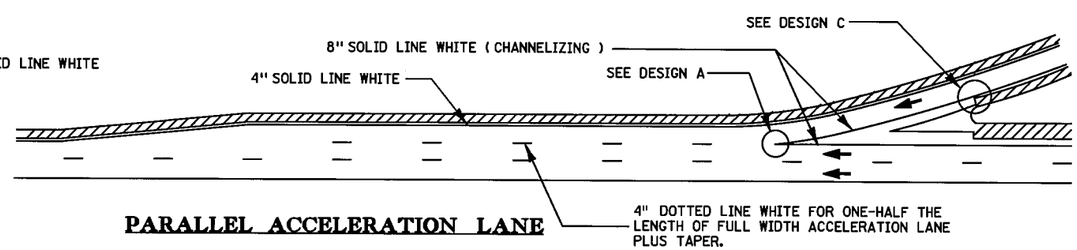

PARALLEL ACCELERATION LANE

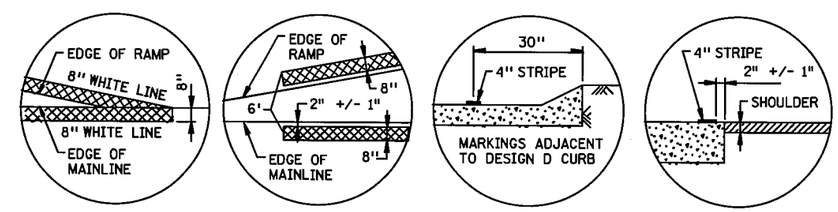

DESIGN A **DESIGN B** **DESIGN C** URBAN **DESIGN C** RURAL

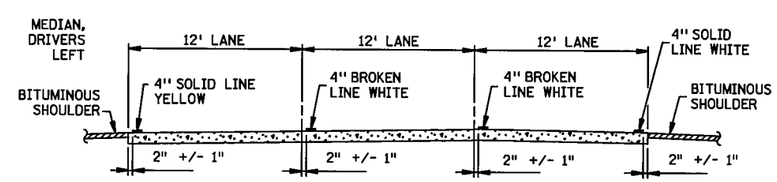

SECTION A-A
(THREE LANES)

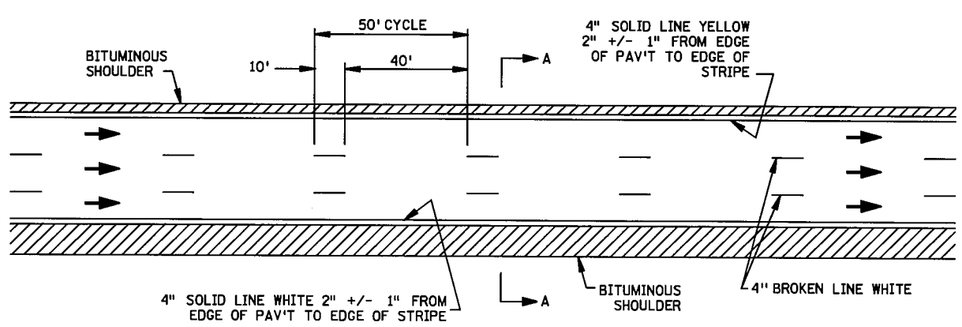

THROUGH LANE MARKINGS

SHOULDER AREA

SP 179-020-031 SP 019-605-028

DRAWN BY: SM	CHECKED BY: HG	CERTIFIED BY _____ LICENSED PROFESSIONAL ENGINEER LIC. NO. 40535 DATE 6/13/2012	PAVEMENT MARKING TYPICALS
			STATE PROJ. NO. 1901-148 (TH 13) SHEET NO. PM9 OF PM14 SHEETS

PLOTTED/REVISED: 6/13/2012
DISTRICT #: METRO
IPLOT NAME: t_typicals_pm_tsh
PATH & FILENAME: IP_PWPdl443450\t_typicals_pm_tshdgn

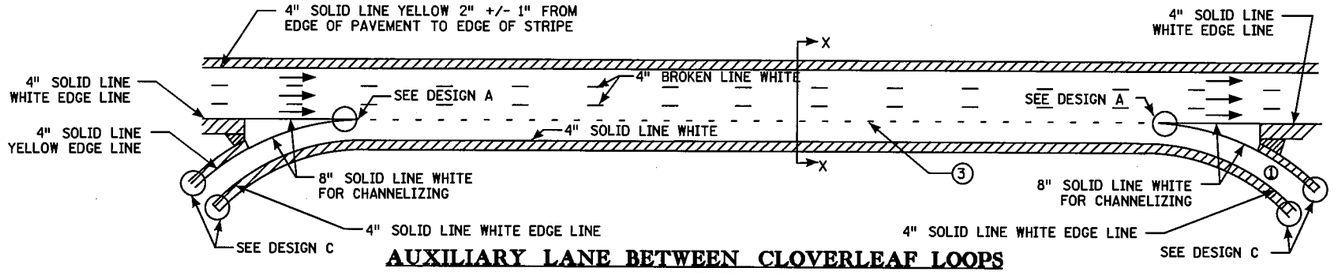

AUXILIARY LANE BETWEEN CLOVERLEAF LOOPS
WITHOUT ESCAPE LANE

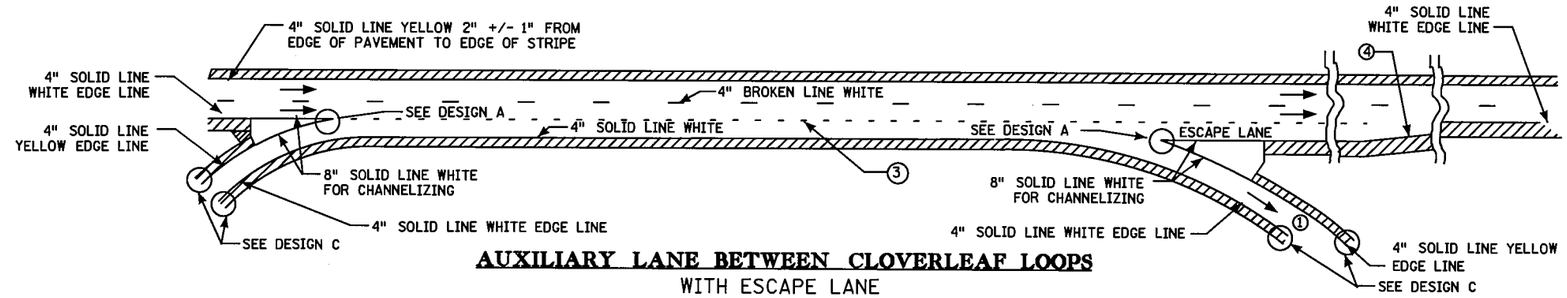

AUXILIARY LANE BETWEEN CLOVERLEAF LOOPS
WITH ESCAPE LANE

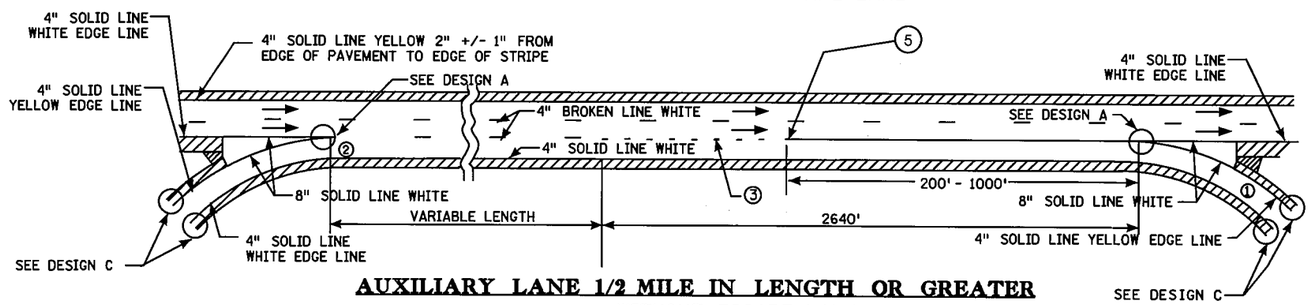

AUXILIARY LANE 1/2 MILE IN LENGTH OR GREATER
WITHOUT ESCAPE LANE

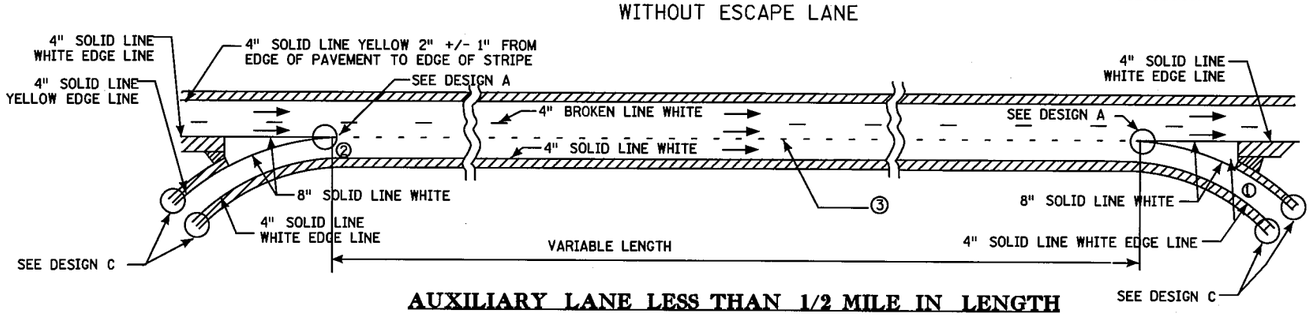

AUXILIARY LANE LESS THAN 1/2 MILE IN LENGTH
EXCEPT CLOVERLEAF WITH ESCAPE LANE

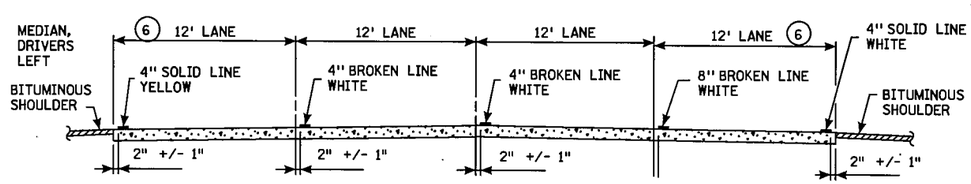

SECTION X - X

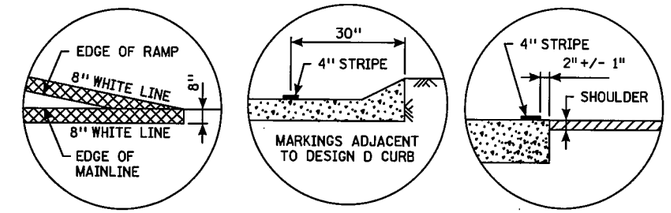

DESIGN A | **DESIGN C** URBAN | **DESIGN C** RURAL

NOTES:

1. EXTEND 8" SOLID LINE WHITE 50' MIN. BEYOND GORE AREA TO COMPENSATE FOR SHARP CURVATURE.
2. EXTEND 8" SOLID LINE WHITE FOR 200' TO 300' AT DISCRETION OF DISTRICT TRAFFIC ENGINEER. ON CURVATURE OR FOR OTHER SITUATIONS WHERE NEEDED FOR BETTER DELINEATION.
3. 8" DOTTED LINE WHITE 3' LONG WITH 12' GAPS AS DETAILED IN FIGURE 3B-10 OF THE MMUTCD.
4. EXTEND 8" SOLID LINE WHITE ENTIRE LENGTH OF THE ESCAPE LANE AND TO THE END OF THE TAPER. PICK UP THE NORMAL 4 IN. SOLID LINE WHITE BEYOND TAPER. TAPER MUST BE AT LEAST 1:50
5. EXTEND 8" SOLID LINE WHITE 200' TO 1000' FROM INTERSECTION OF GORE STRIPES, DEPENDING ON LENGTH OF LANE BEING DROPPED, AS DETERMINED BY DISTRICT TRAFFIC ENGINEER.
6. ON PAVEMENTS OVER 24' WIDE (I.E. 27') EDGE LINES WILL BE PLACED SO LANES ARE A MAXIMUM OF 12' WIDE.

DENOTES SHOULDER AREA

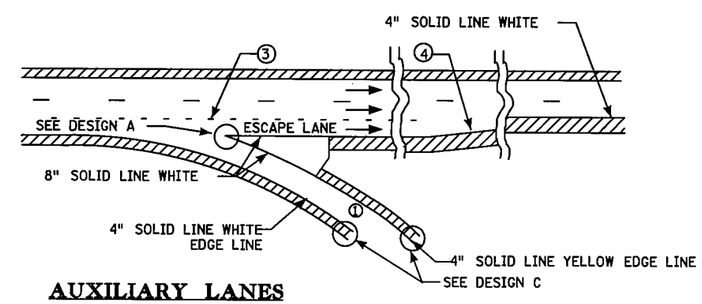

AUXILIARY LANES WITH ESCAPE LANE

SP 179-020-031 SP 019-605-028

PLOTTED/REVISED: 6/13/2012

DISTRICT #: METRO
IPLOT NAME: t_typicals_pm_tsh2
PATH & FILENAME: IP_PWP:dl443450t_typicals_pm_tsh.dgn

DRAWN BY: SM	CHECKED BY: HG	CERTIFIED BY [signature] LICENSED PROFESSIONAL ENGINEER LIC. NO. 40535 DATE 6/13/2012	PAVEMENT MARKING TYPICALS
			STATE PROJ. NO. 1901-148 (TH 13) SHEET NO. PM10 OF PM14 SHEETS

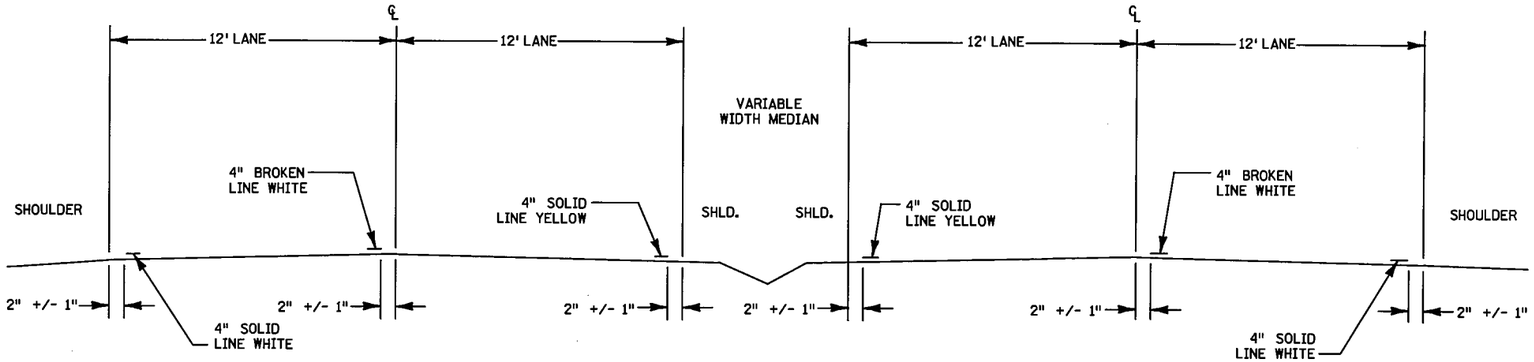

SECTION A-A
FOUR LANES

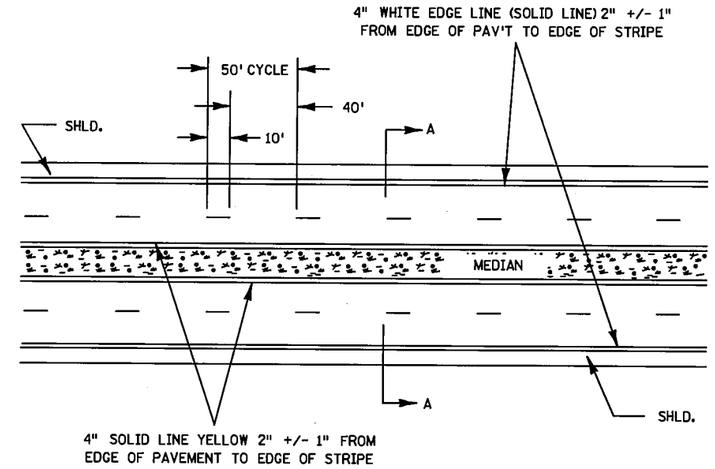

TYPICAL 4-LANE DIVIDED LANE MARKINGS

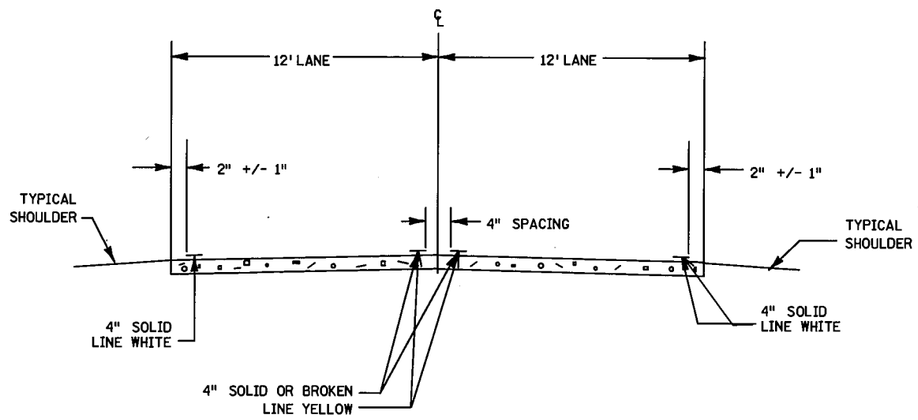

SECTION B-B

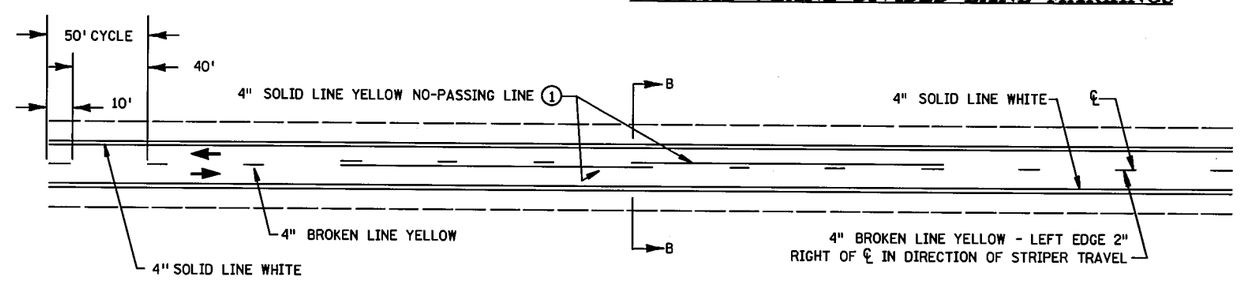

TWO LANE-TWO WAY TRAFFIC MARKINGS

(1) CONTACT TRAFFIC ENGINEER FOR NO PASSING ZONE SURVEY.

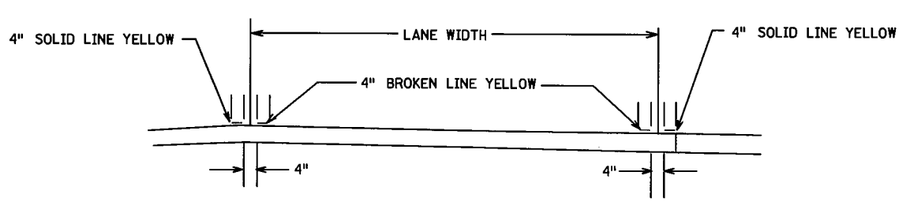

SECTION C-C
TWO WAY LEFT TURN LANE

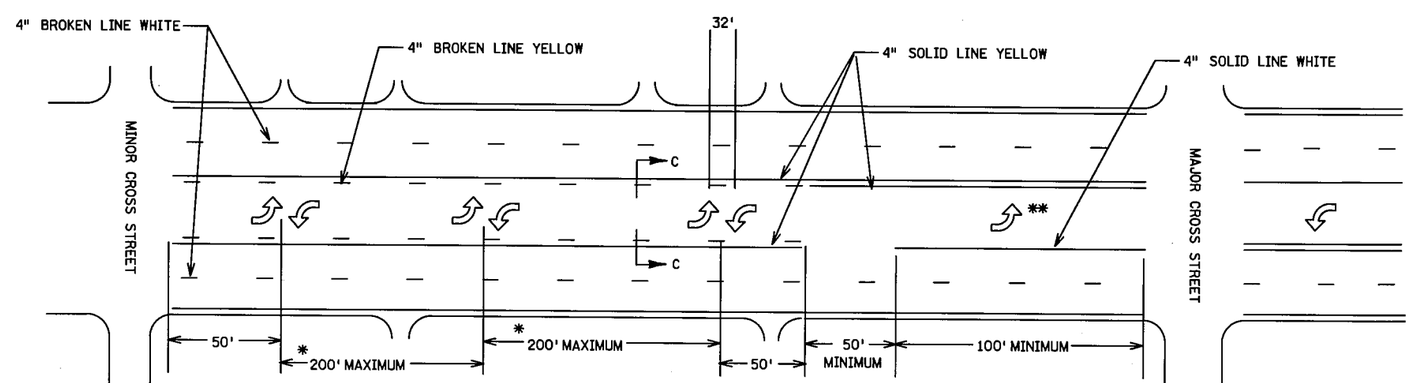

* THESE DISTANCES SHOULD BE EQUAL. THE ARROWS ARE PLACED TO SHOW THE OPERATION AND DO NOT HAVE TO LINE UP WITH ANY OF THE DRIVEWAYS.

TWO WAY LEFT TURN LANE

** SEE "TYPICAL MESSAGE PLACEMENT FOR TURN LANES" FOR NUMBER AND PLACEMENT OF ARROWS.

SP 179-020-031 SP 019-605-028

PAVEMENT MARKING TYPICALS

DRAWN BY: SM	CHECKED BY: HG	CERTIFIED BY Tiffany J Dagn LICENSED PROFESSIONAL ENGINEER	LIC. NO. 40535	DATE 6/13/2012	STATE PROJ. NO. 1901-148 (TH 13)	SHEET NO. PM11 OF PM14 SHEETS

PLOTTED/REVISED: 6/13/2012
DISTRICT #: METRO
IPLOT NAME: t_typicals_pm_tsh3
PATH & FILENAME: IP_PWP:d1443450\t_typicals_pm_tsh.dgn

TYPICAL LEFT TURN LANE

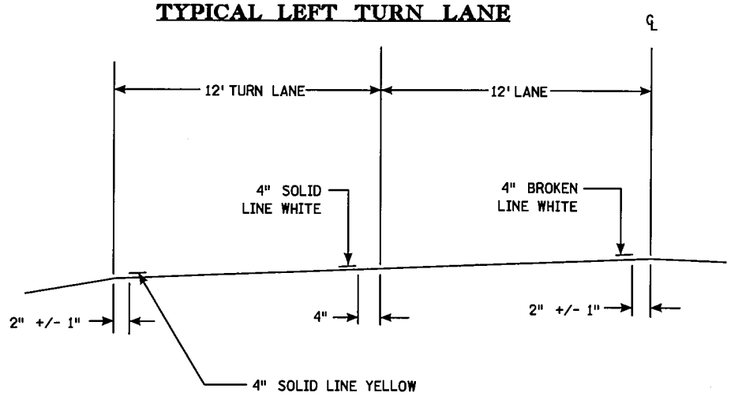

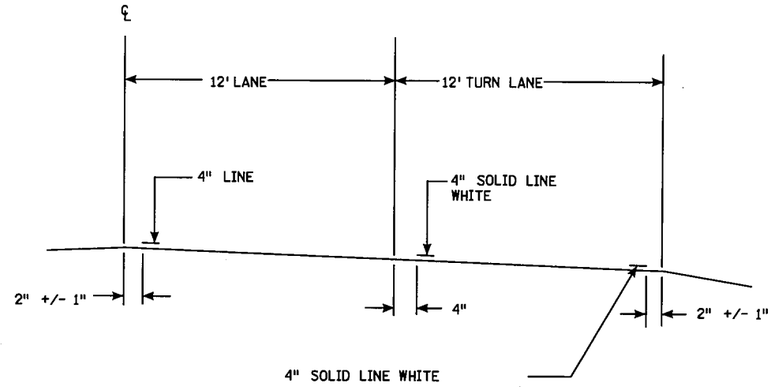

TYPICAL LANE REDUCTION TRANSITION

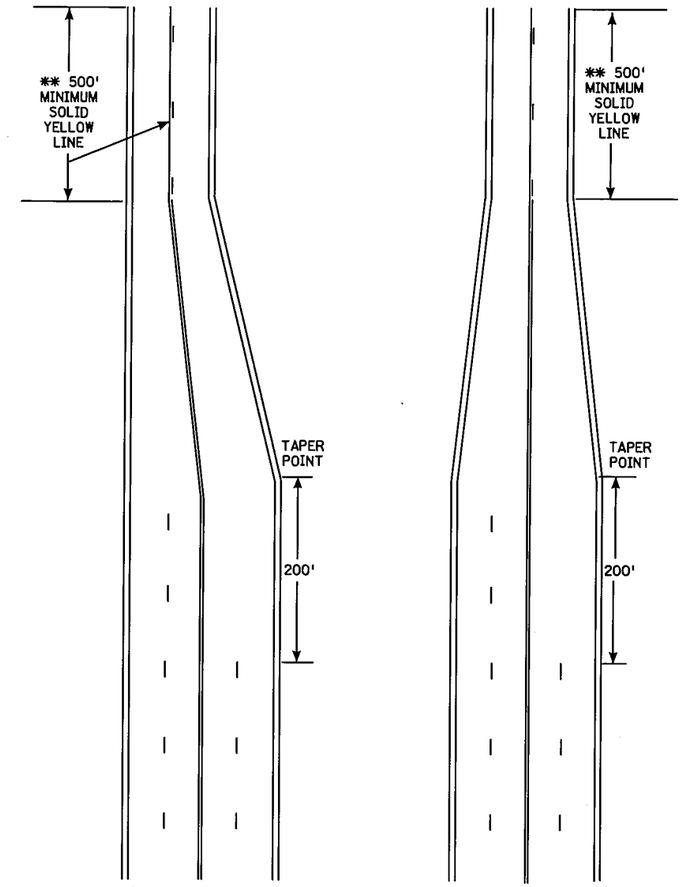

TYPICAL MESSAGE PLACEMENT FOR TURN LANES

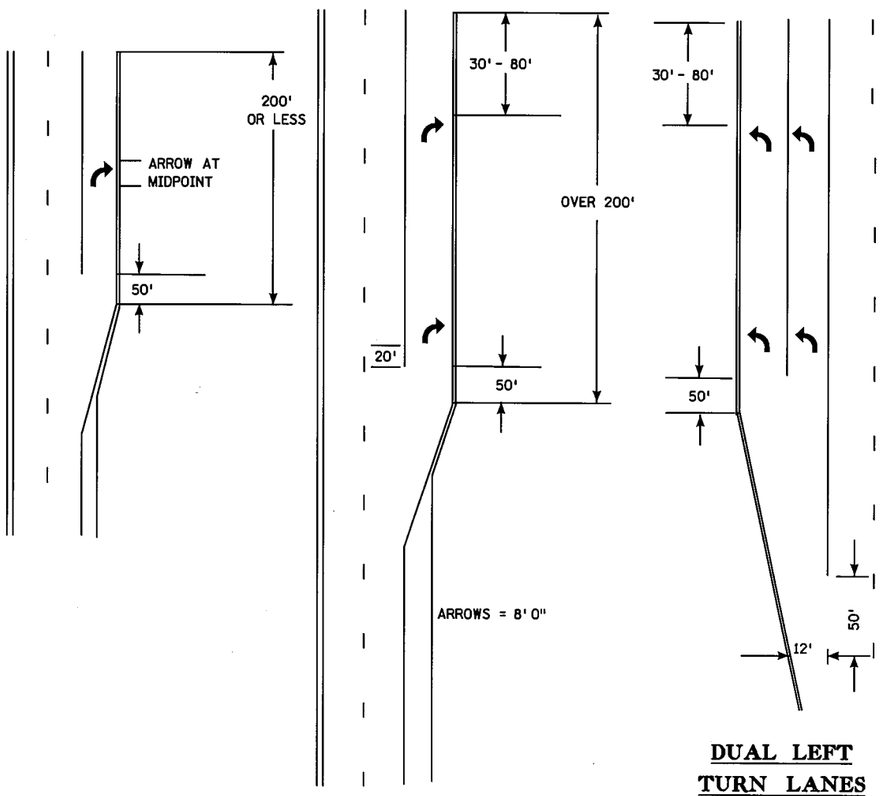

DUAL LEFT TURN LANES

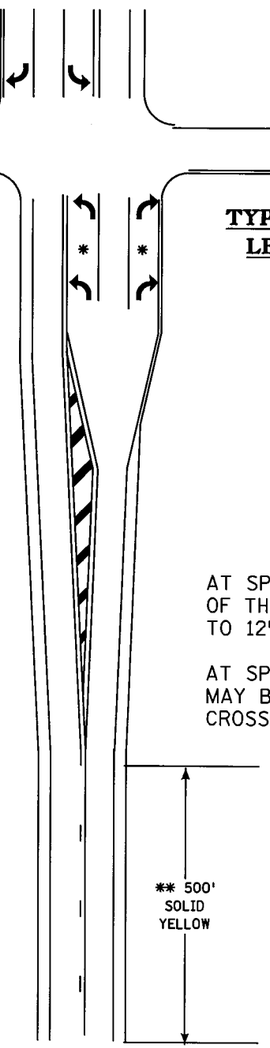

TYPICAL MARKINGS FOR LEFT TURN ISLANDS

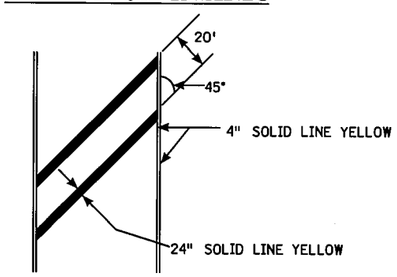

AT SPEEDS LESS THAN 40 MPH THE WIDTH OF THE CROSSHATCH LINE MAY BE REDUCED TO 12".

AT SPEEDS 40 MPH AND OVER THE SPACING MAY BE INCREASED TO 30' BETWEEN CROSSHATCH LINES.

* SEE "TYPICAL MESSAGE PLACEMENT FOR TURN LANES" FOR NUMBER OF ARROWS.

** IF THE DISTANCE BETWEEN THE BEGINNING OF THE SOLID LINE YELLOW IS LESS THAN THE DISTANCES IN THE CHART BELOW FROM THE END OF A PRECEDING SOLID LINE YELLOW IN THE SAME LANE, THE SOLID LINE SHALL BE EXTENDED BETWEEN THEM.

35 MPH SPEED LIMIT OR LESS..... 500'
40-50 MPH SPEED LIMIT..... 650'
55 MPH SPEED LIMIT..... 800'

SP 179-020-031 SP 019-605-028

DRAWN BY: SM	CHECKED BY: HG	CERTIFIED BY [signature] LICENSED PROFESSIONAL ENGINEER LIC. NO. 40535 DATE 6/13/2012	PAVEMENT MARKING TYPICALS
			STATE PROJ. NO. 1901-148 (TH 13) SHEET NO. PM12 OF PM14 SHEETS

PLOTTED/REVISED: 6/13/2012
DISTRICT #: METRO
IPLOT NAME: t_typicals_pm_tsh4
PATH & FILENAME: IP_PWP:dl443450\t_typicals_pm_tshdgn

MARKINGS FOR PEDESTRIAN CROSSWALKS

(L) WIDTH OF INSIDE LANE	(W) WIDTH OF PAINTED AREA	(S) WIDTH OF SPACE
9′	2.0′	2.5′
10′	2.5′	2.5′
11′	2.5′	3.0′
12′	3.0′	3.0′
13′	3.0′	3.5′

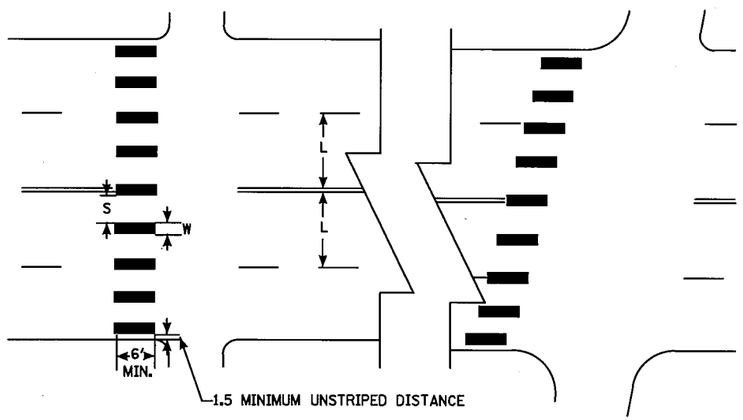

NOTES:

1. PAINTED AREAS TO BE CENTERED ON CENTERLINE AND LANE LINES.
2. A MINIMUM OF 1.5 FT. CLEAR DISTANCE SHALL BE LEFT ADJACENT TO THE CURB. IF LAST PAINTED AREA FALLS INTO THIS DISTANCE IT MUST BE OMITTED.
3. ON TWO LANE TWO WAY STREETS, USE SPACING SHOWN FOR AN 11 FT. INSIDE LANE.
4. FOR DIVIDED ROADWAYS, ADJUSTMENTS IN SPACING OF THE BLOCKS SHOULD BE MADE IN THE MEDIAN SO THAT THE BLOCKS ARE MAINTAINED IN THEIR PROPER LOCATION ACROSS THE TRAVELED PORTION OF THE ROADWAY.
5. AT SKEWED CROSSWALKS, THE BLOCKS ARE TO REMAIN PARALLEL TO THE LANE LINES AS SHOWN.

PLACEMENT FOR "STOP AHEAD" MARKINGS AND STOP LINES

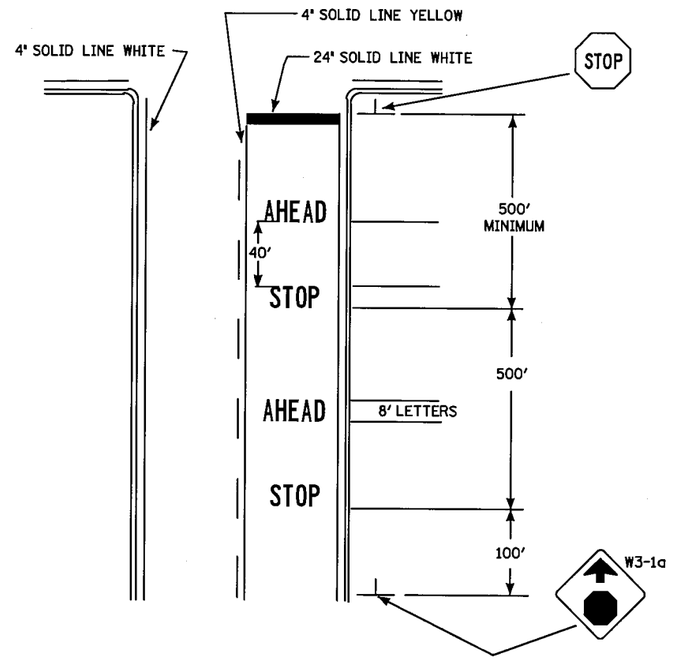

NOTES:

1. DOUBLE PAVEMENT MESSAGE AS SHOWN SHOULD BE INSTALLED WHENEVER THE STOP AHEAD SIGN IS PLACED A MINIMUM OF 1100′ IN ADVANCE OF THE STOP SIGN
2. IF THE DISTANCE BETWEEN THE BEGINNING OF THE SOLID LINE YELLOW IS LESS THAN THE DISTANCES IN THE CHART BELOW FROM THE END OF A PRECEDING SOLID LINE YELLOW IN THE SAME LANE, THE SOLID LINE SHALL BE EXTENDED BETWEEN THEM.

   35 MPH SPEED LIMIT OR LESS ..... 500′
   40-50 MPH SPEED LIMIT ..... 650′
   55 MPH SPEED LIMIT ..... 800′

3. WHERE STOP LINES ARE USED WITHOUT A MARKED CROSSWALK, THE STOP LINE SHOULD BE PLACED AT THE DESIRED STOPPING POINT, AND IN NO CASE NO MORE THAN 30 FEET OR LESS THAN 4 FEET FROM THE NEAREST EDGE OF THE INTERSECTING CURB LINE OR THE NEAR EDGE OF THE SHOULDER. WHERE STOP LINES AND CROSSWALK MARKINGS ARE USED TOGETHER, THE STOP LINE SHOULD BE PLACED 4 FEET IN ADVANCE OF AND PARALLEL TO THE NEAREST CROSSWALK LINE.

   IF A STOP LINE IS USED IN CONJUNCTION WITH A STOP SIGN, IT SHOULD ORDINARILY BE PLACED IN LINE WITH THE STOP SIGN. HOWEVER, IF THE SIGN CANNOT BE LOCATED EXACTLY WHERE VEHICLES ARE EXPECTED TO STOP, THE STOP LINE SHOULD BE PLACED AT THE STOPPING POINT.

METRO DISTRICT NOTE: STOP BARS AND CROSSWALK PAVEMENT MARKINGS WILL NOT BE INSTALLED AT THE SAME LOCATION UNLESS OTHERWISE DETAILED IN THE PLAN.

MARKINGS FOR RAILROAD CROSSINGS

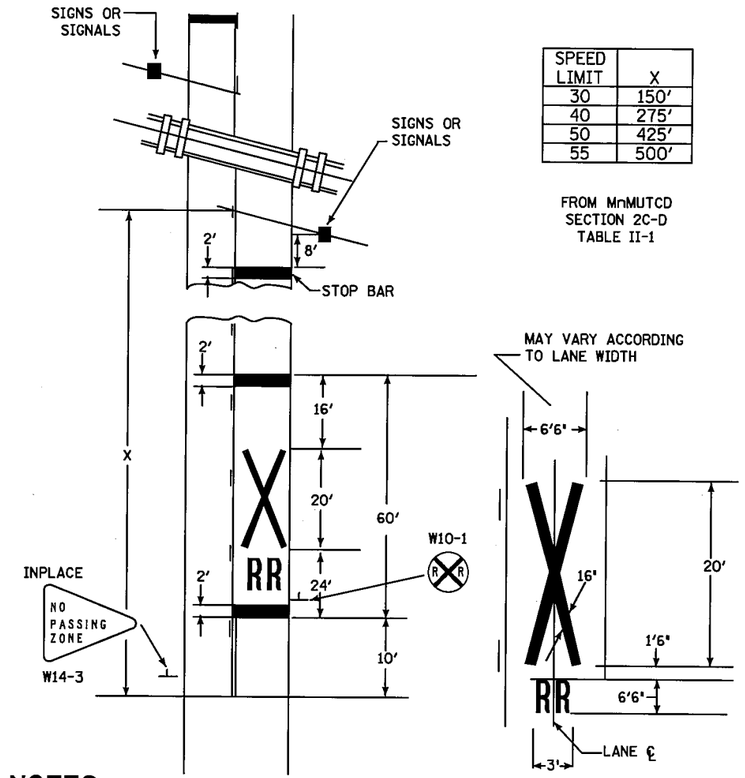

SPEED LIMIT	X
30	150′
40	275′
50	425′
55	500′

FROM MnMUTCD SECTION 2C-D TABLE II-1

NOTES:

1. THE DISTANCE FROM THE RAILROAD CROSSING MARKING TO THE NEAREST TRACK WILL VARY ACCORDING TO THE APPROACH SPEED AND SIGHT DISTANCE OF THE VEHICULAR TRAFFIC APPROACHING, BUT SHOULD NOT BE LESS THAN 50 FEET.
2. ON MULTI-LANE ROADS THE TRANSVERSE BANDS SHOULD EXTEND ACROSS ALL APPROACH LANES, AND INDIVIDUAL R X R SYMBOLS SHOULD BE USED IN EACH APPROACH LANE.
3. THE STOP LINE MAY BE PARALLEL TO AND 15 FEET FROM THE TRACKS WHERE THERE ARE RAILROAD CROSSBUCK SIGNS.

SP 179-020-031 SP 019-605-028

PAVEMENT MARKING TYPICALS

DRAWN BY: SM	CHECKED BY: HG	CERTIFIED BY [signature] LICENSED PROFESSIONAL ENGINEER	LIC. NO. 40535	DATE 6/13/2012	STATE PROJ. NO. 1901-148 (TH 13)	SHEET NO. PM13 OF PM14 SHEETS

PLOTTED/REVISED: 6/13/2012
DISTRICT *: METRO
IPLOT NAME: t_typicals_pm_tsh5
PATH & FILENAME: IP_PWPdl443450\t_typicals_pm_tshdgn

MARKINGS FOR BYPASS LANES

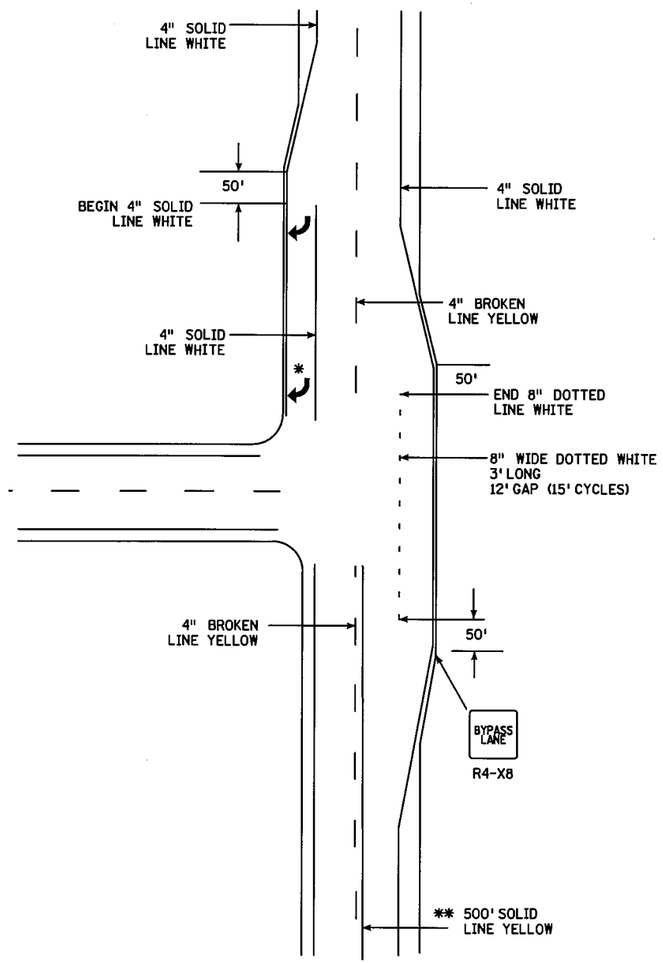

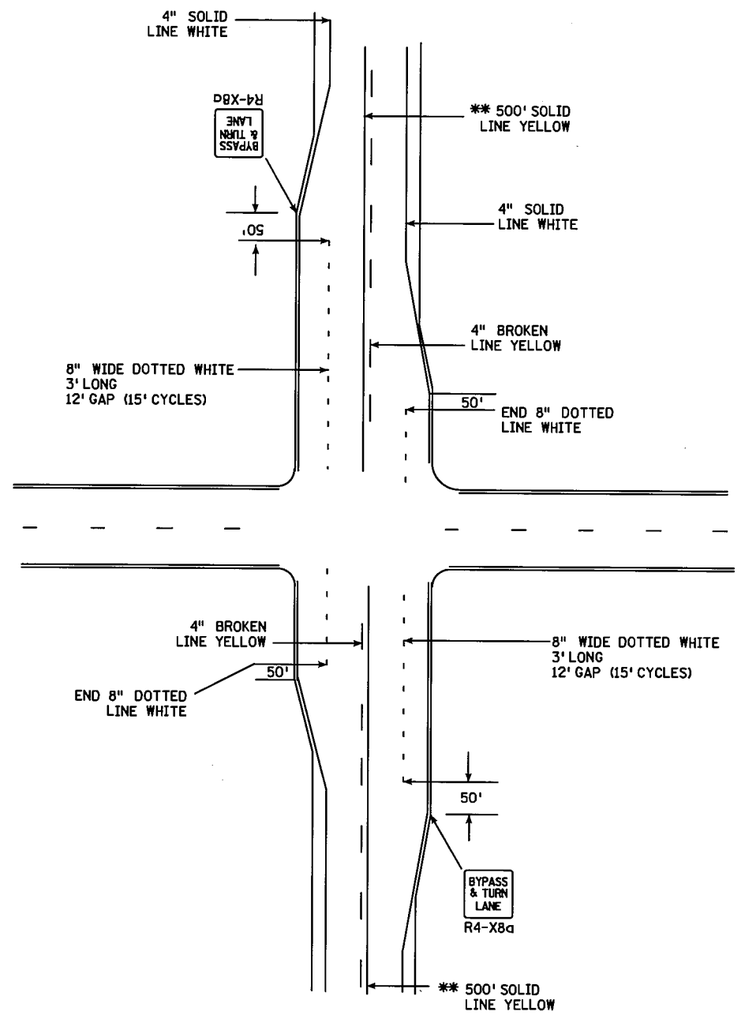

* SEE "TYPICAL MESSAGE PLACEMENT FOR TURN LANES" FOR NUMBER OF ARROWS.

** THE 500' NO PASSING ZONE APPROACHING THE BYPASS LANE AS SHOWN IS A MN/DOT METRO DISTRICT STANDARD. IF THE DISTANCE BETWEEN THE BEGINNING OF THE SOLID LINE YELLOW IS LESS THAN THE DISTANCES IN THE CHART BELOW FROM THE END OF A PRECEDING SOLID LINE YELLOW IN THE SAME LANE, THE SOLID LINE SHALL BE EXTENDED BETWEEN THEM.

35 MPH SPEED LIMIT OR LESS.....500'
40-50 MPH SPEED LIMIT.....650'
55 MPH SPEED LIMIT.....800'

FREE RIGHT STOP CONDITION

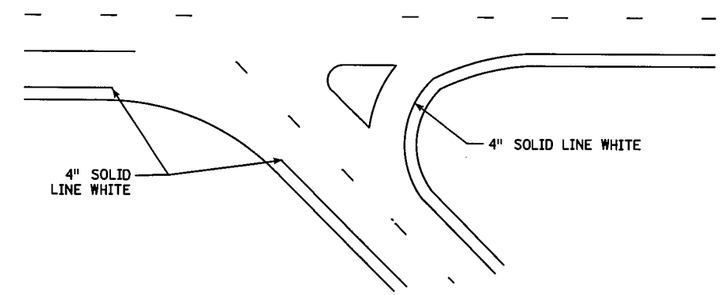

FREE RIGHT YIELD CONDITION

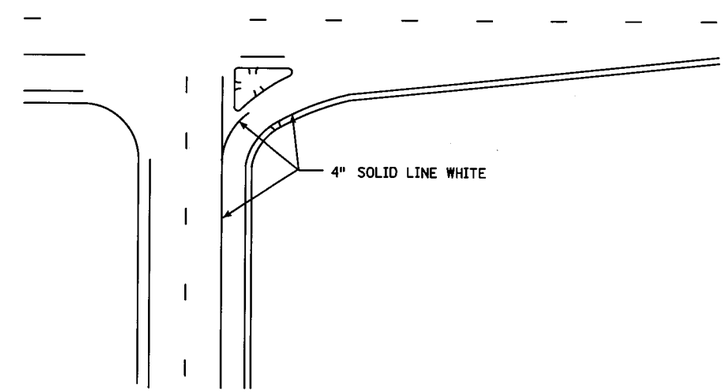

FREE RIGHT ACCELERATION LANE CONDITION

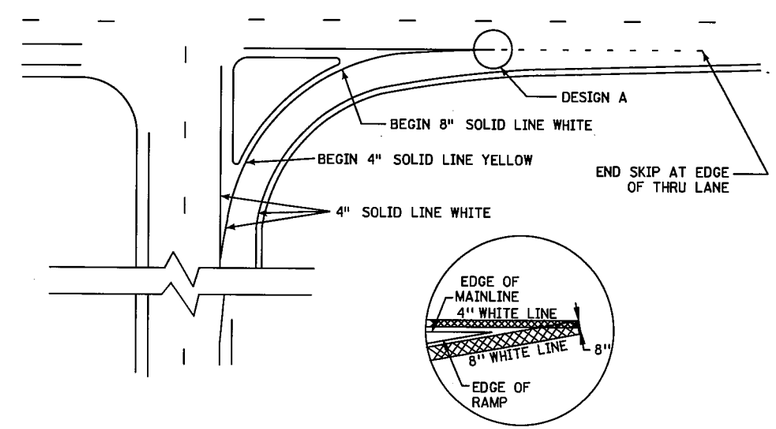

DESIGN A

SP 179-020-031 SP 019-605-028

DRAWN BY: SM	CHECKED BY: HG	CERTIFIED BY [signature] LICENSED PROFESSIONAL ENGINEER LIC. NO. 40535 DATE 6/13/2012	PAVEMENT MARKING TYPICALS
			STATE PROJ. NO. 1901-148 (TH 13) SHEET NO. PM14 OF PM14 SHEETS

PLOTTED/REVISED: 6/13/2012
DISTRICT *: METRO
IPLOT NAME: t_typicals_pm_tsh6
PATH & FILENAME: IP_PWP:dl443450\t_typicals_pm_tsh.dgn

PLOTTED/REVISED: 7/26/2012

DISTRICT #: METRO
IPLOT NAME: 1901-148J12
PATH & FILENAME: IP_PWP:d146077\1901-148J1.dgn

TAB SL	TABULATION OF LIGHTING QUANTITIES			
			INTERCHANGE FUNDS	100% STATE FUNDS
ITEM NO.	ITEM	UNIT	ESTIMATED QUANTITIES	ESTIMATED QUANTITIES
2545	ELECTRIC LIGHT SYSTEM	LUMP SUM	0.83	0.17

BY	DATE	REVISIONS

DRAWN BY: PB CKD BY: GB DATE: 4/2012

I HEREBY CERTIFY THAT SHEETS SL1 TO SL6 HAVE BEEN PREPARED BY ME OR UNDER MY DIRECT SUPERVISION AND I AM A DULY LICENSED PROFESSIONAL ENGINEER UNDER THE LAWS OF THE STATE OF MINNESOTA.

MICHAEL GERBENSKY

DATE 7-26-12 LIC. NO 19863

S.P. 019-605-028 S.P. 179-020-031

LIGHTING QUANTITIES

STATE PROJ.NO.1901-148 (T.H.13) SHEET NO.SL1 OF SL6 SHEETS

STAINLESS STEEL OR ALUMINUM

RADIUS CHART (ENGLISH)

MAST ARM LENGTH	RADIUS
6	5
9	8
12	10

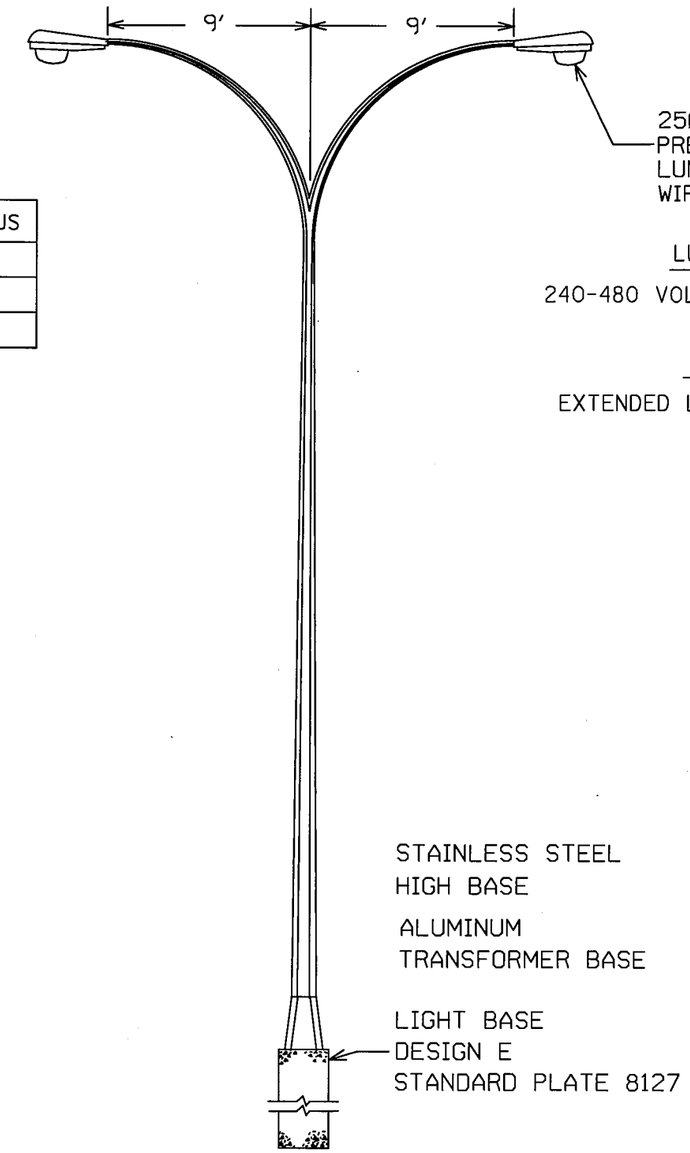

LUMINAIRES

240-480 VOLT - NO PHOTO CELL

LAMPS

EXTENDED LIFE LAMPS REQUIRED

LIGHTING UNIT TYPE 9D-40

S.P. 019-605-028 S.P. 179-020-031

BY	DATE	REVISIONS

DRAWN BY: PB CKD BY: GB DATE: 4/2012

CERTIFIED BY Michael P. Gubensky LICENSED PROFESSIONAL ENGINEER LIC. NO. 19863 DATE: 7/26/2012

LIGHTING DETAILS

STATE PROJ.NO.1901-148 (T.H.13) SHEET NO. SL2 OF SL6 SHEETS

PLOTTED/REVISED: 7/26/2012

DISTRICT #: METRO
IPLOT NAME: t1901-148.l15
PATH & FILENAME: IP_PWP:d1460777\t1901-148.l1.dgn

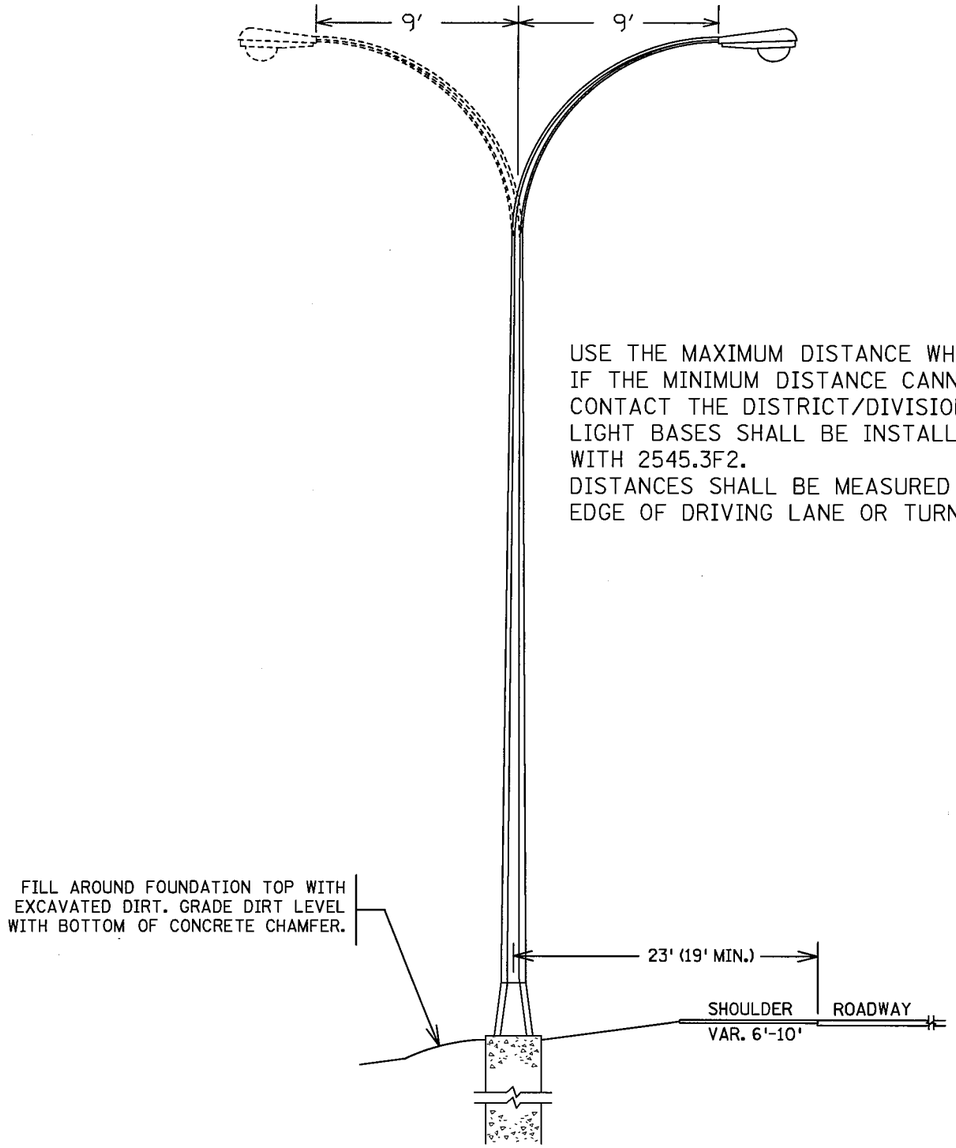

USE THE MAXIMUM DISTANCE WHENEVER POSSIBLE, IF THE MINIMUM DISTANCE CANNOT BE OBTAINED CONTACT THE DISTRICT/DIVISION TRAFFIC ENGINEER LIGHT BASES SHALL BE INSTALLED IN ACCORDANCE WITH 2545.3F2.
DISTANCES SHALL BE MEASURED FROM THE EDGE OF DRIVING LANE OR TURN LANE.

PLACEMENT OF LIGHTING UNITS TYPE 9-40 & 9D-40

RADIUS CHART (ENGLISH)

MAST ARM LENGTH	RADIUS
6	5
9	8
12	10

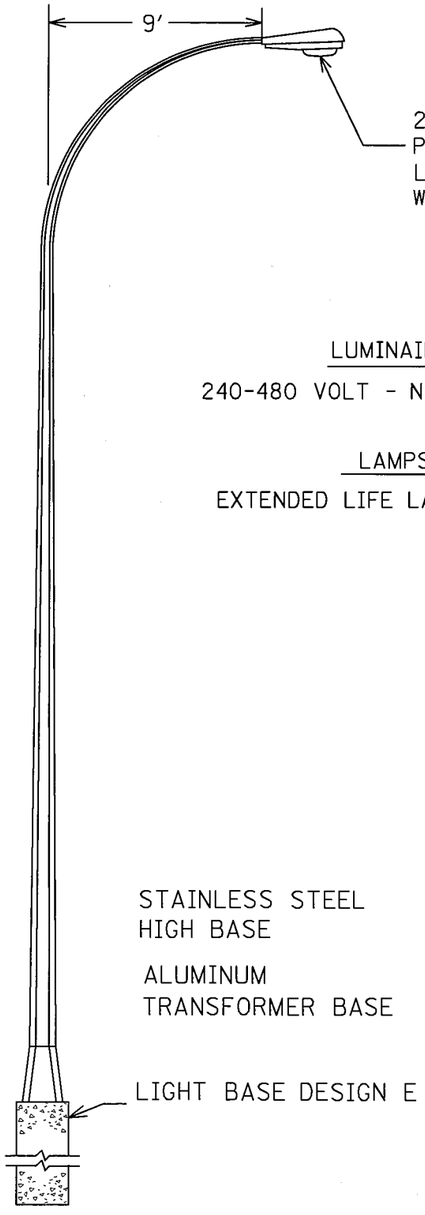

LUMINAIRES

240-480 VOLT - NO PHOTO CELL

LAMPS

EXTENDED LIFE LAMPS REQUIRED

LIGHTING UNIT TYPE 9-40

(BREAKAWAY)

S.P. 019-605-028 S.P. 179-020-031

PLOTTED/REVISED: 7/26/2012

DISTRICT #: METRO
IPLOT NAME: t1901-148J13
PATH & FILENAME: IP_PWP:d1460777\t1901-148J1.dgn

BY	DATE	REVISIONS

DRAWN BY: PB CKD BY: GB DATE: 4/2012

CERTIFIED BY Michael P. Gubensky LICENSED PROFESSIONAL ENGINEER LIC. NO. 19863 DATE: 7/26/2012

LIGHTING DETAILS

STATE PROJ.NO.1901-148 (T.H.13) SHEET NO. SL3 OF SL6 SHEETS

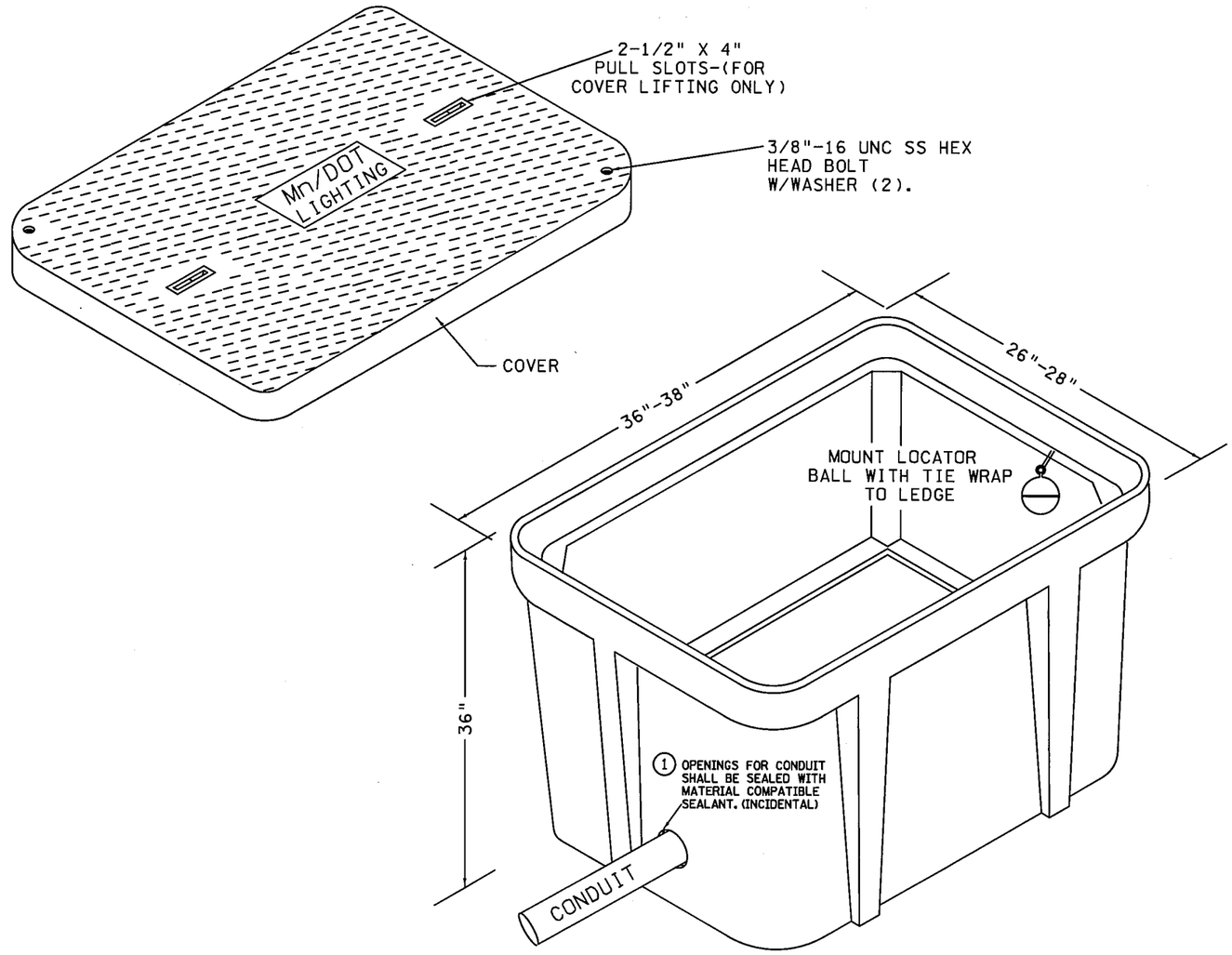

SPECIFIC NOTES

1. OPENINGS FOR CONDUIT SHALL BE SEALED WITH MATERIAL COMPATIBLE SEALANT. (INCIDENTAL)
2. PLUG CONDUIT OPENING WITH A DRAINABLE COMPOUND (INCIDENTAL)
3. MOUNT LOCATOR BALL WITH TIE WRAP TO COVER LEDGE
4. HEX HEAD BOLTS & NUTS SHALL BE STAINLESS STEEL PER SPEC 3392.
5. PLACE COMPACTED 1'0" THICK AGGREGATE DRAIN BED BELOW THE BOTTOM OF THE VAULT TO THE SATISFACTION OF THE ENGINEER. USE SPEC 3149.2H COARSE FILTER AGGREGATE

LIGHTING SPLICE VAULT

S.P. 019-605-028 S.P. 179-020-031

BY	DATE	REVISIONS

DRAWN BY: PB CKD BY: GB DATE: 4/2012

CERTIFIED BY Michael P. Gubensky LICENSED PROFESSIONAL ENGINEER LIC. NO. 19863 DATE: 7/26/2012

LIGHTING DETAILS

STATE PROJ.NO.1901-148 (T.H.13) SHEET NO. SL4 OF SL6 SHEETS

PLOTTED/REVISED: 7/26/2012

DISTRICT #: METRO
IPLOT NAME: t1901-148J14
PATH & FILENAME: IP_PWP:d1460777\t1901-148J1.dgn

LEGEND

- LIGHTING UNIT TYPE 9-40
- LIGHTING UNIT TYPE 9D-40
- PAD MOUNTED FD. PT. CABINET 240/480 VOLT
- DIRECT BURIED CABLE 4 CONDUCTOR NO. 4
- PERMANENT GROUND ROD (25 OHMS OR LESS)
- ====== 3" PVC (UNLESS NOTED OTHERWISE)

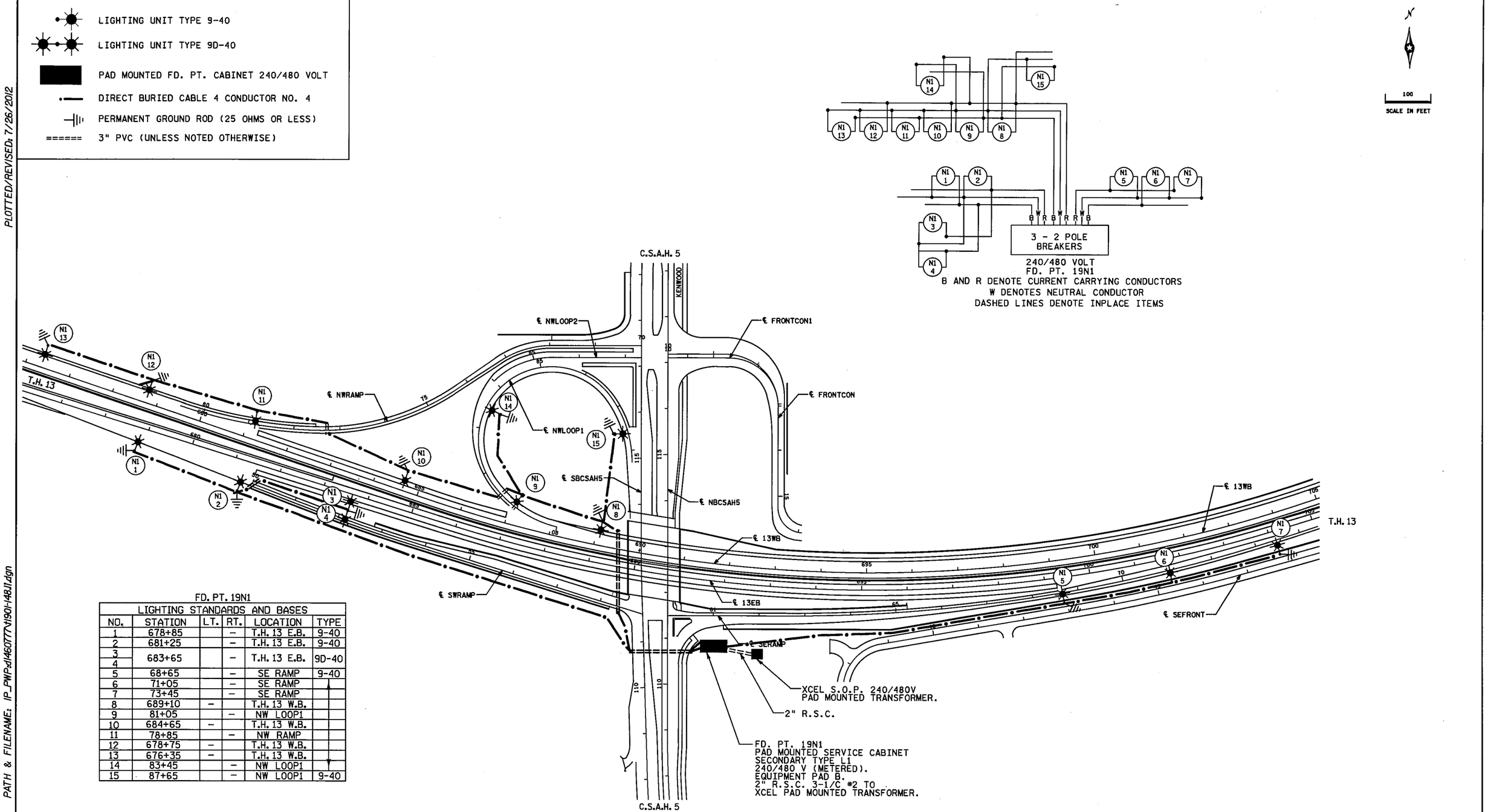

FD. PT. 19N1

LIGHTING STANDARDS AND BASES

NO.	STATION	LT.	RT.	LOCATION	TYPE
1	678+85		–	T.H. 13 E.B.	9-40
2	681+25		–	T.H. 13 E.B.	9-40
3	683+65		–	T.H. 13 E.B.	9D-40
4					
5	68+65		–	SE RAMP	9-40
6	71+05		–	SE RAMP	
7	73+45		–	SE RAMP	
8	689+10	–		T.H. 13 W.B.	
9	81+05		–	NW LOOP1	
10	684+65	–		T.H. 13 W.B.	
11	78+85		–	NW RAMP	
12	678+75	–		T.H. 13 W.B.	
13	676+35	–		T.H. 13 W.B.	
14	83+45		–	NW LOOP1	
15	87+65		–	NW LOOP1	9-40

FEED POINT 19N1

S.P. 019-605-028 S.P. 179-020-031

BY	DATE	REVISIONS

DRAWN BY: PB CKD BY: GB DATE: 4/2012

FEEDPOINT: 19N1 LOCATION: T.H. 13 at C.S.A.H. 5
METER ADDRESS: 12711 County Road 5, Burnsville, 55337

CERTIFIED BY Michael P. Gibensky LICENSED PROFESSIONAL ENGINEER LIC. NO. 19863 DATE: 7/26/2012

LIGHTING PLAN

STATE PROJ.NO.1901-148 (T.H.13) SHEET NO. SL5 OF SL6 SHEETS

PLOTTED/REVISED: 7/26/2012

DISTRICT #: METRO
IPLOT NAME: 1901-148J17
PATH & FILENAME: IP_PWP-d1460777\1901-148J1.dgn

PLOTTED/REVISED: 7/26/2012

DISTRICT #: METRO
IPLOT NAME: 1901-148J16
PATH & FILENAME: IP_PWP=d:\460777\1901-148J1.dgn

LEGEND

- 3" PVC CONDUIT (UNLESS NOTED OTHERWISE)
- LIGHTING SPLICE VAULT
- INPLACE HIGH MAST LIGHTING UNIT
- INPLACE HIGH MAST LIGHTING UNIT
- INPLACE FEED POINT
- INPLACE CONDUIT
- INPLACE DIRECT BURIED CABLE 4 CONDUCTOR #4.

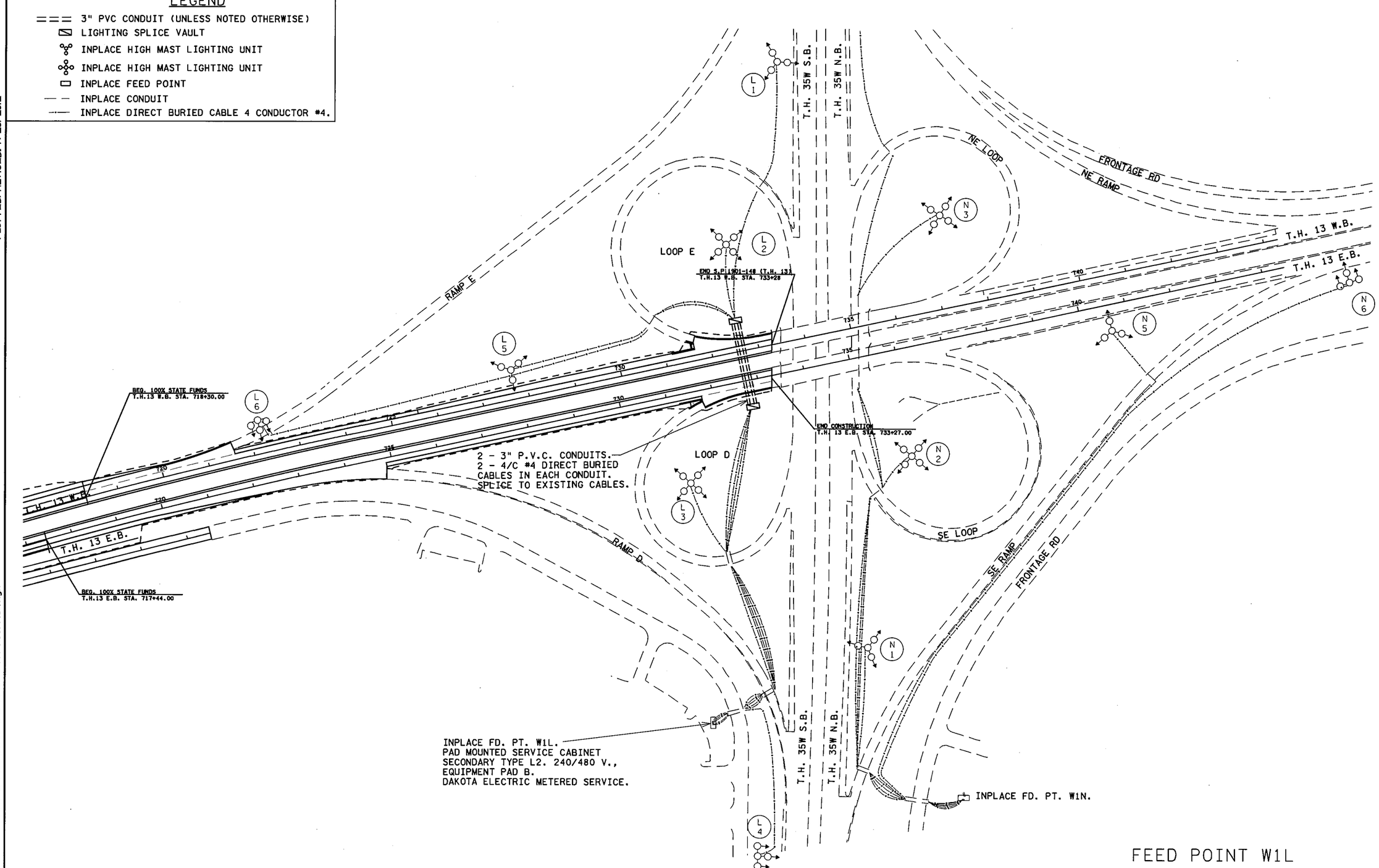

FEED POINT W1L

S.P. 019-605-028 S.P. 179-020-031

BY	DATE	REVISIONS
DRAWN BY: PB	CKD BY: GB	DATE: 4/2012

FEEDPOINT: W1L LOCATION: T.H. 13 at T.H. 35W
METER ADDRESS:

CERTIFIED BY Michael P. Gilbertson LICENSED PROFESSIONAL ENGINEER LIC. NO. 19863 DATE: 7/26/2012

LIGHTING PLAN

STATE PROJ.NO.1901-148 (T.H.13) SHEET NO. SL6 OF SL6 SHEETS

EQUIPMENT SCHEDULE

SYMBOL	DESCRIPTION	LAMP SOURCE	MOUNTING	OPTICS	MANUFACTURER & SERIES NUMBER
①	LIGHTING UNIT TYPE SPECIAL 1 PENDANT STYLE LED LUMINAIRE ON ROUND ALUMINUM POLE WITH RECEPTACLE.	135W 80 LED 4000K	16' POLE MOUNTED ON BRIDGE PILASTER	TYPE III FLAT GLASS	LUMEC - LUMINAIRE: DMS50-135W80LED4KES-UN1V-LE3F-BKTX POLE: AM6U-13-GFI-BKTX ARM: NM-MC
	LIGHTING UNIT TYPE SPECIAL 2 LED LUMINAIRE MOUNTED ON DIRECT EMBED FIBERGLASS POLE	180W 160 LED 4100K	30' DIRECT EMBED FIBERGLASS POLE	TYPE II	LUMINAIRE - PHILIPS: RVM-180W160LED4K-LE2-UN1V-BK POLE - CMT: MB33-F-50-S6
	LIGHTING UNIT TYPE SPECIAL 3 PENDANT STYLE LED LUMINAIRE ON ROUND ALUMINUM POLE WITH WITH RECEPTACLE.	135W 80 LED 4000K	20' POLE ON CONCRETE BASE MNDOT DESIGN "E" MOD.	TYPE III FLAT GLASS	LUMEC - LUMINAIRE: DMS50-135W80LED4KES-UN1V-LE3F-BKTX POLE: SAM8V-20-GFI-BKTX ARM: NM-MC

TAB SLC	TABULATION OF LIGHTING QUANTITIES		
ITEM NO.	ITEM	UNIT	ESTIMATED QUANTITIES
2545	ELECTRIC LIGHT SYSTEM A	LUMP SUM	1

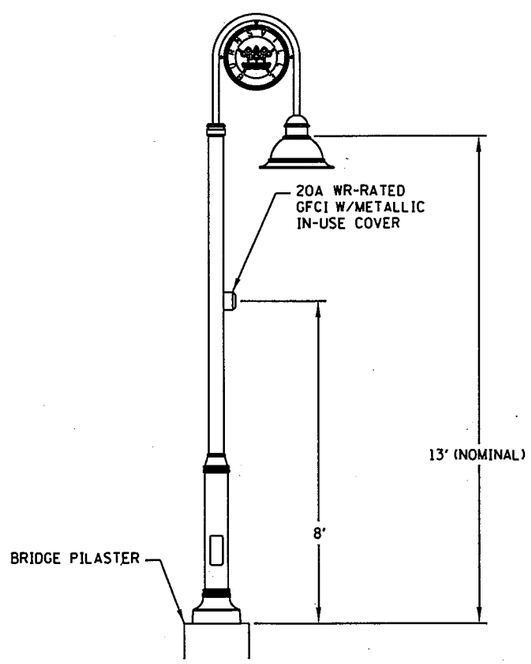

LIGHTING UNIT TYPE SPECIAL 1 DETAIL

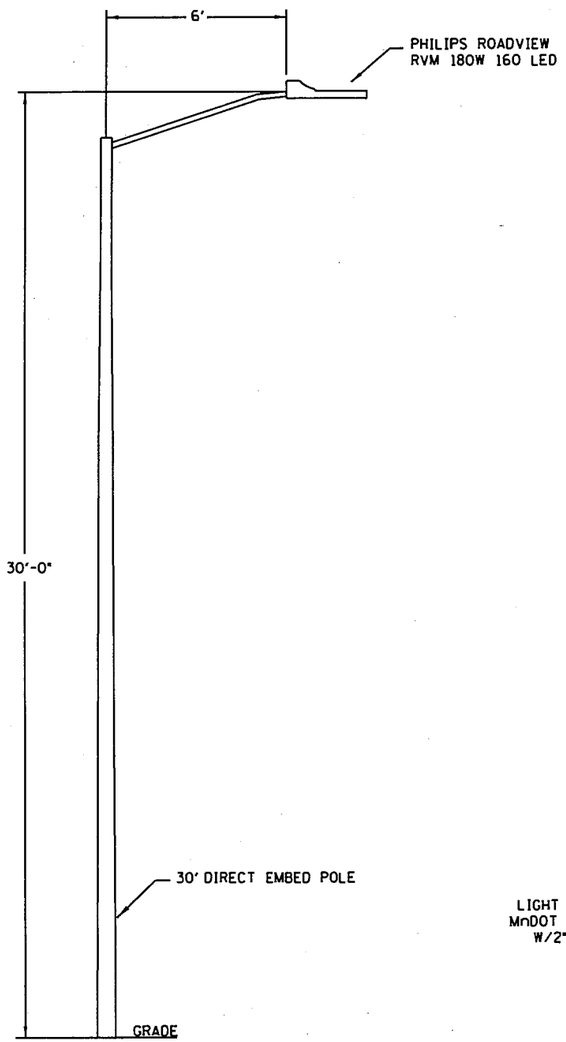

LIGHTING UNIT TYPE SPECIAL 2 DETAIL

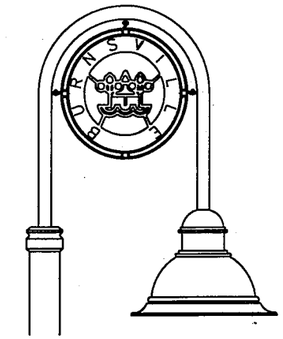

MEDALLION DETAIL

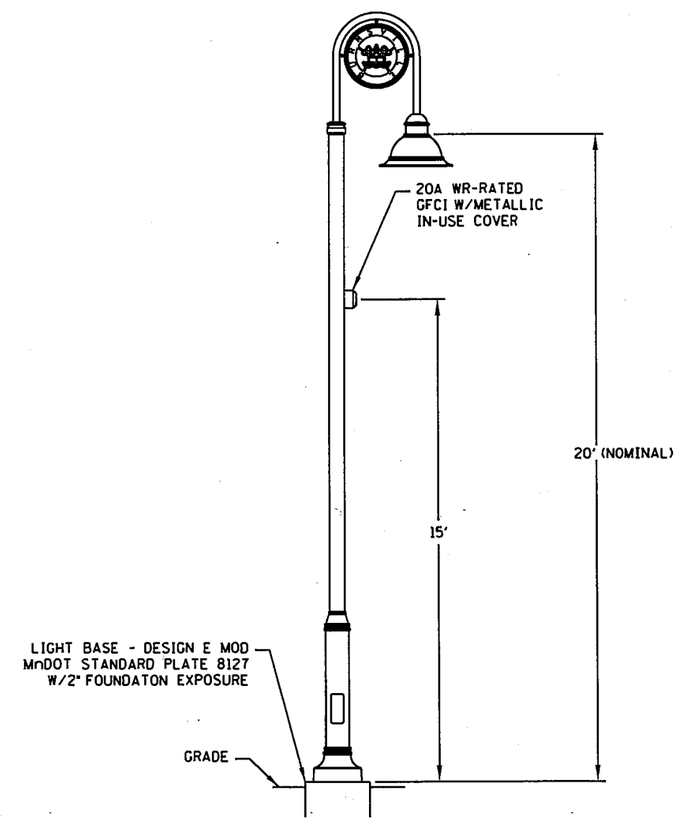

LIGHTING UNIT TYPE SPECIAL 3 DETAIL

I hereby certify that sheets SLC1 through SLC5 of this plan were prepared by me or under my direct supervision and that I am a duly Licensed Professional Engineer under the laws of the State of Minnesota.

J.E. BUDKE

Date: 6-13-12 Lic. No. 8943

CERTIFIED BY _____ LICENSED PROFESSIONAL ENGINEER LIC. NO. 8943

LIGHTING DETAILS

STATE PROJ. NO. 179-020-031
STATE PROJ. NO. 019-605-028
STATE PROJ. NO. 1901-148 (T.H. 13) Sheet No. SLC1 of SLC5 Sheets

12:56:57 PM 7/31/2012 byeats
S:\AE\B\Burns\118582\Hwy 5 & 13 Lighting\1901-148\plnshts\1901-148_LT.dgn LT1

S:\AE\B\Burns\118582\Hwy 5 & 13 Lighting\1901-148\plnshts\1901-148_LT.dgn LT2 6/13/2012 2:22:52 PM mtran

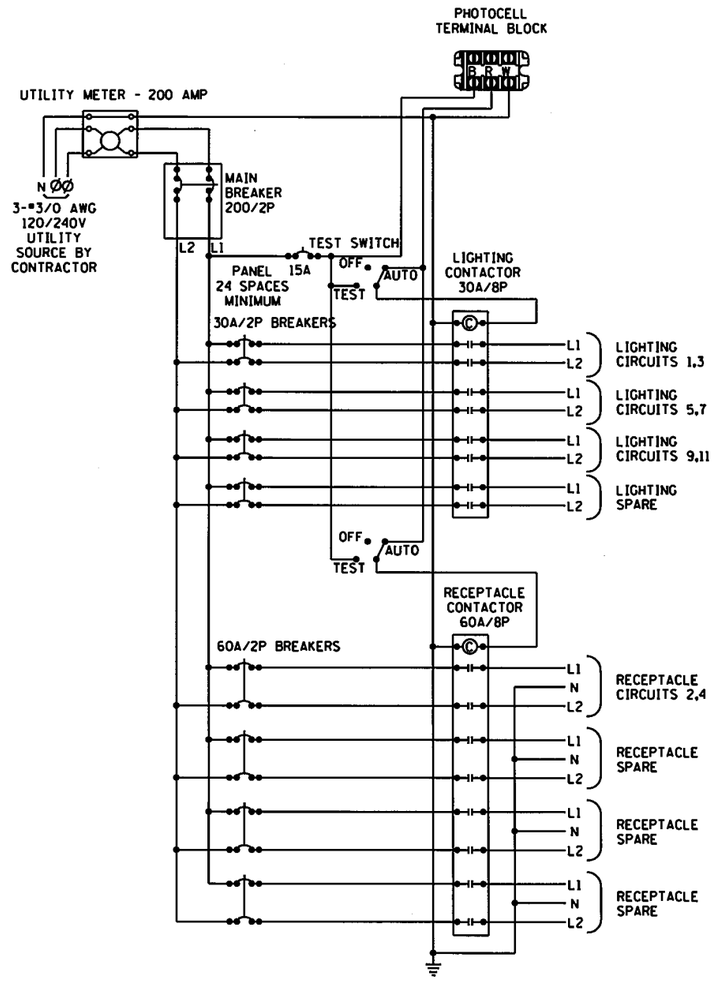

SERVICE CABINET SCHEMATIC

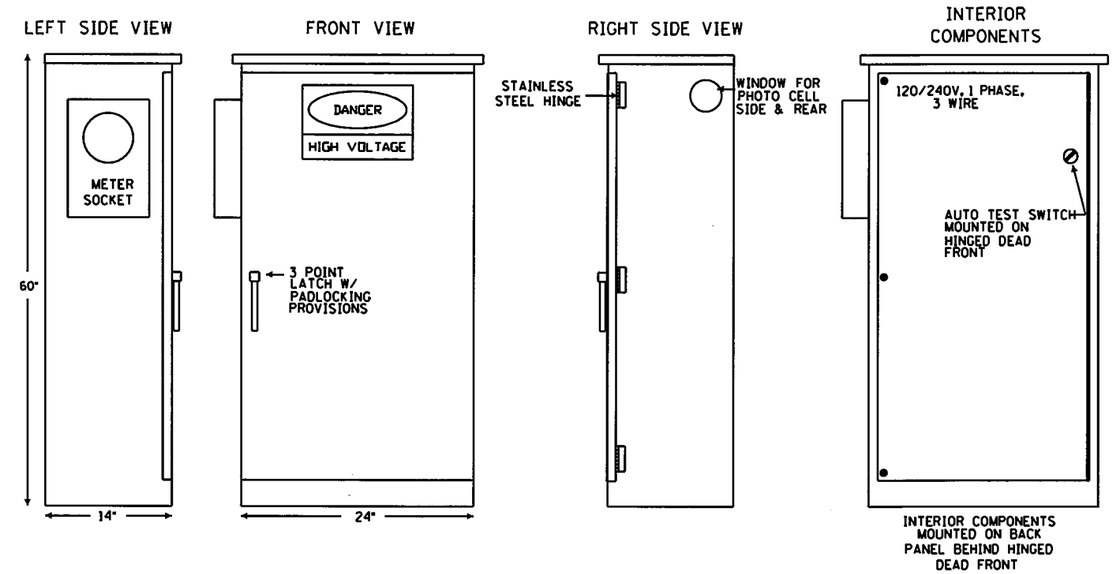

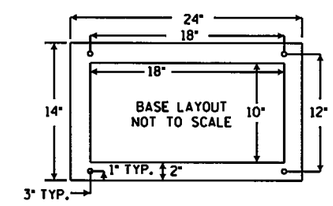

CABINET CONSTRUCTION

- -NEMA 3R
- -INTERIOR COMPONENTS MOUNTED ON BACK PANEL BEHIND DEAD FRONT
- -1/8" ANODIZED ALUMINUM (DURANDDIC #314)
- -NEOPRENE GASKETED DOORS
- -STAINLESS STEEL HARDWARE
- -ETL LISTED IN ACCORDANCE WITH UL508A

SERVICE CABINET NOTES:

A. PROVIDE METER SOCKET PER UTILITY COMPANY REQUIREMENTS.

B. CIRCUIT BREAKERS SHALL BE 120/240 VOLT AC, 60Hz AND SHALL BE CLEARLY MARKED WITH THE "ON" AND "OFF" POSITIONS AND IDENTIFIED WITH THE LOAD WHICH IT IS CARRYING.

C. SHORT CIRCUIT RATING - 22,000 AIC SYMMETRICAL.

D. SELECTOR SWITCH ALLEN BRADLEY #800TJ2A.

E. CIRCUIT CONTACTORS SHALL HAVE A 240 VOLT RATING, WITH 120 VOLT COILS.

F. PROVIDE PANEL WITH DIMENSIONS AS REQUIRED TO FIT EQUIPMENT PROPOSED.

G. PROVIDE A 25-OHM GROUND AT CABINET AS PER NEC.

H. BOTH PHOTOELECTRIC CONTROL AND ITS SOCKET SHALL BE 3 TERMINAL, POLARIZED, TWIST-LOCK TYPE. IT SHALL BE EQUIPPED WITH A MOVRO TYPE LIGHTNING ARRESTER.

I. CABINET SHALL BE MANUFACTURED BY POVOLNY SPECIALTIES INC. 651.452.7335.

J. COORDINATE XCEL ENERGY SERVICE CONNECTION(S) WITH GREG WENZEL AT 952.829.4513.

SERVICE CABINET DETAILS

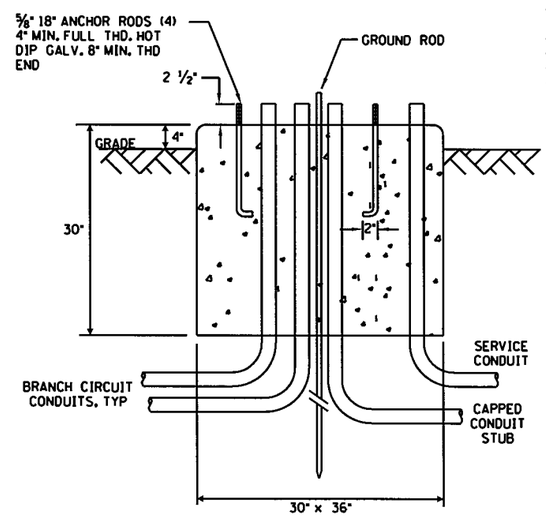

EQUIPMENT PAD DETAILS
(SERVICE CABINET FOUNDATION)

NOT TO SCALE

CERTIFIED BY _____ LICENSED PROFESSIONAL ENGINEER LIC. NO. 8943

LIGHTING DETAILS

STATE PROJ. NO. 179-020-031
STATE PROJ. NO. 019-605-028
STATE PROJ. NO. 1901-148 (T.H. 13) Sheet No. SLC2 of SLC5 Sheets

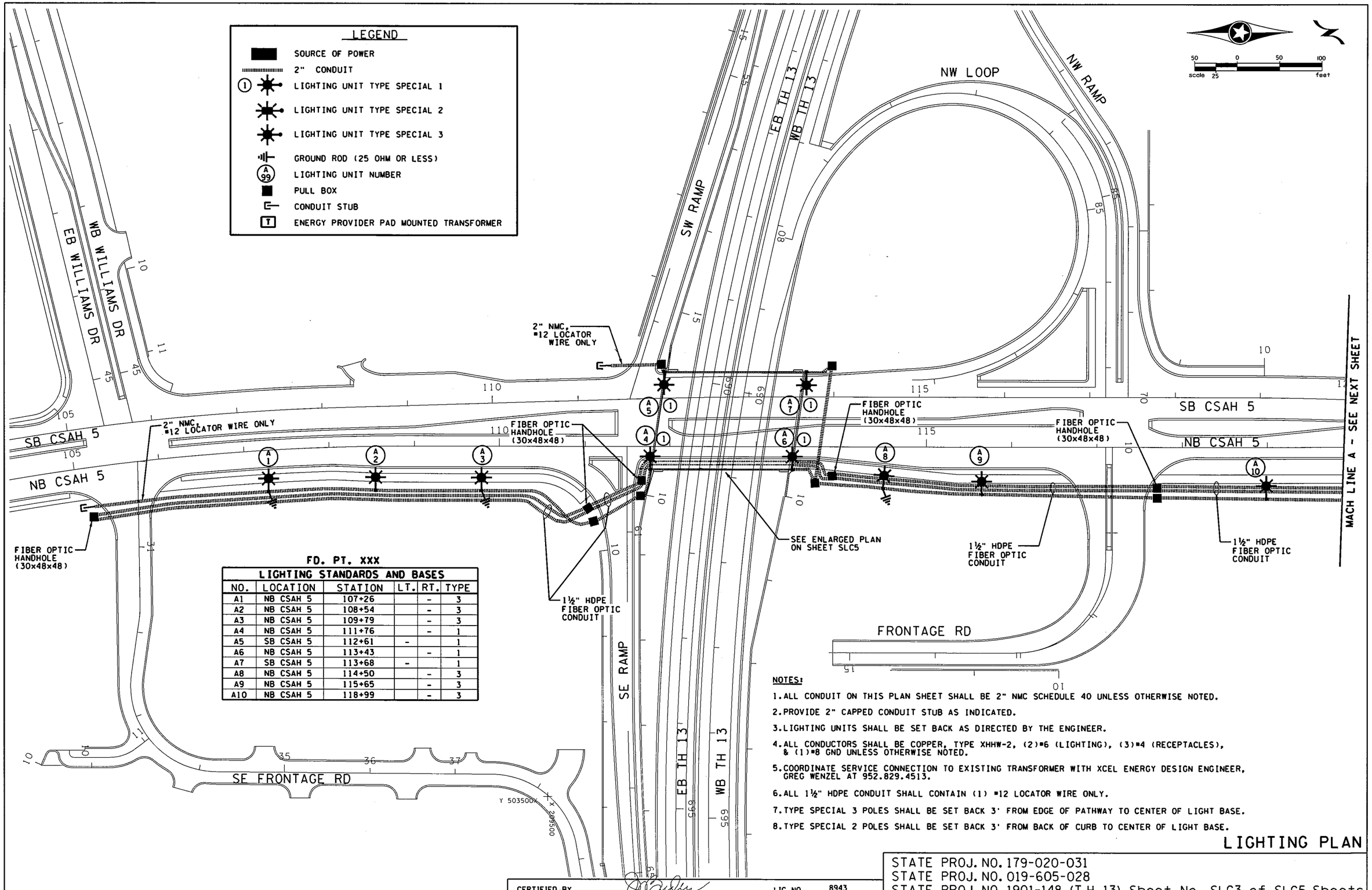

FD. PT. XXX

LIGHTING STANDARDS AND BASES

NO.	LOCATION	STATION	LT.	RT.	TYPE
A1	NB CSAH 5	107+26		-	3
A2	NB CSAH 5	108+54		-	3
A3	NB CSAH 5	109+79		-	3
A4	NB CSAH 5	111+76		-	1
A5	SB CSAH 5	112+61	-		1
A6	NB CSAH 5	113+43		-	1
A7	SB CSAH 5	113+68	-		1
A8	NB CSAH 5	114+50		-	3
A9	NB CSAH 5	115+65		-	3
A10	NB CSAH 5	118+99		-	3

NOTES:

1. ALL CONDUIT ON THIS PLAN SHEET SHALL BE 2" NMC SCHEDULE 40 UNLESS OTHERWISE NOTED.
2. PROVIDE 2" CAPPED CONDUIT STUB AS INDICATED.
3. LIGHTING UNITS SHALL BE SET BACK AS DIRECTED BY THE ENGINEER.
4. ALL CONDUCTORS SHALL BE COPPER, TYPE XHHW-2, (2)#6 (LIGHTING), (3)#4 (RECEPTACLES), & (1)#8 GND UNLESS OTHERWISE NOTED.
5. COORDINATE SERVICE CONNECTION TO EXISTING TRANSFORMER WITH XCEL ENERGY DESIGN ENGINEER, GREG WENZEL AT 952.829.4513.
6. ALL 1½" HDPE CONDUIT SHALL CONTAIN (1) #12 LOCATOR WIRE ONLY.
7. TYPE SPECIAL 3 POLES SHALL BE SET BACK 3' FROM EDGE OF PATHWAY TO CENTER OF LIGHT BASE.
8. TYPE SPECIAL 2 POLES SHALL BE SET BACK 3' FROM BACK OF CURB TO CENTER OF LIGHT BASE.

LIGHTING PLAN

CERTIFIED BY _____ LICENSED PROFESSIONAL ENGINEER LIC. NO. 8943

STATE PROJ. NO. 179-020-031
STATE PROJ. NO. 019-605-028
STATE PROJ. NO. 1901-148 (T.H. 13) Sheet No. SLC3 of SLC5 Sheets

S:\AE\B\Burns\118582\Hwy 5 & 13 Lighting\1901-148\plnshts\1901-148_LT.dgn LT3 mtran 6/13/2012 2:22:55 PM

NOTES:

1. ALL CONDUIT ON THIS PLAN SHEET SHALL BE 2" NMC SCHEDULE 40 UNLESS OTHERWISE NOTED.
2. PROVIDE 2" CAPPED CONDUIT STUB AS INDICATED.
3. LIGHTING UNITS SHALL BE SET BACK AS DIRECTED BY THE ENGINEER.
4. ALL CONDUCTORS SHALL BE COPPER, TYPE XHHW-2, (2)#6 (LIGHTING), (3)#4 (RECEPTACLES), & (1)#8 GND UNLESS OTHERWISE NOTED.
5. COORDINATE SERVICE CONNECTION TO EXISTING TRANSFORMER WITH XCEL ENERGY DESIGN ENGINEER, GREG WENZEL AT 952.829.4513.
6. ALL 1 1/2" HDPE CONDUIT SHALL CONTAIN (1) #12 LOCATOR WIRE ONLY.
7. TYPE SPECIAL 3 POLES SHALL BE SET BACK 3' FROM EDGE OF PATHWAY TO CENTER OF LIGHT BASE.
8. TYPE SPECIAL 2 POLES SHALL BE SET BACK 3' FROM BACK OF CURB TO CENTER OF LIGHT BASE.

scale 25 — 50 0 50 100 feet

FD. PT. XXX

LIGHTING STANDARDS AND BASES					
NO.	LOCATION	STATION	LT.	RT.	TYPE
A11	NB CSAH 5	120+36		-	3
A12	NB CSAH 5	121+70		-	3
A13	NB CSAH 5	122+85		-	2
A14	126TH ST W	23+30		-	2
A15	126TH ST W	25+08		-	2
A16	126TH ST W	26+85		-	2
A17	126TH ST W	28+64		-	2
A18	126TH ST W	21+51		-	2
A19	126TH ST W	19+86		-	2
A20	126TH ST W	17+70		-	2
A21	126TH ST W	15+60		-	2
A22	126TH ST W	14+86		-	2
A23	126TH ST W	12+24		-	2
A24	NW FRONT	7+60	-		2

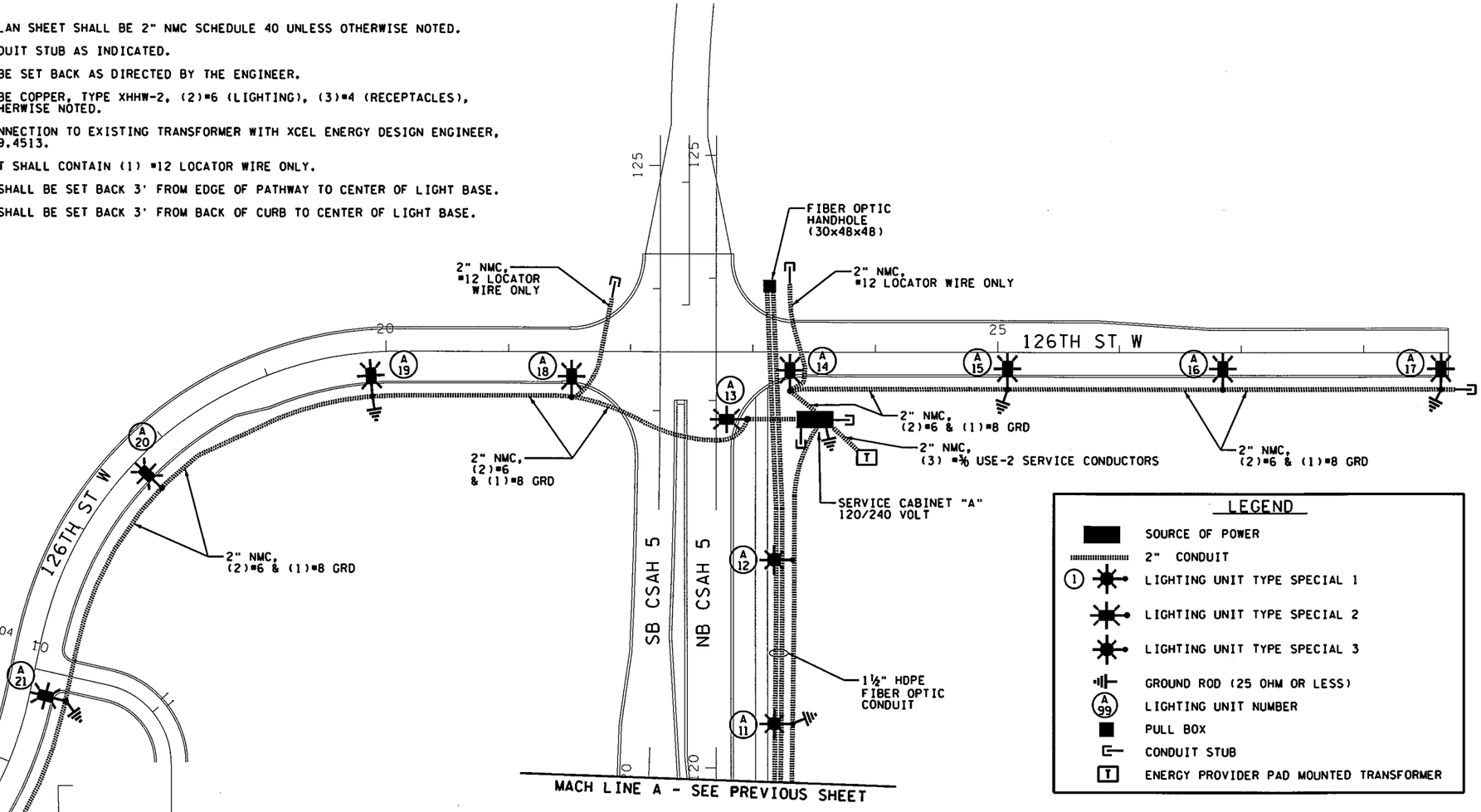

LEGEND

- SOURCE OF POWER
- 2" CONDUIT
- (1) LIGHTING UNIT TYPE SPECIAL 1
- LIGHTING UNIT TYPE SPECIAL 2
- LIGHTING UNIT TYPE SPECIAL 3
- GROUND ROD (25 OHM OR LESS)
- (A99) LIGHTING UNIT NUMBER
- PULL BOX
- CONDUIT STUB
- (T) ENERGY PROVIDER PAD MOUNTED TRANSFORMER

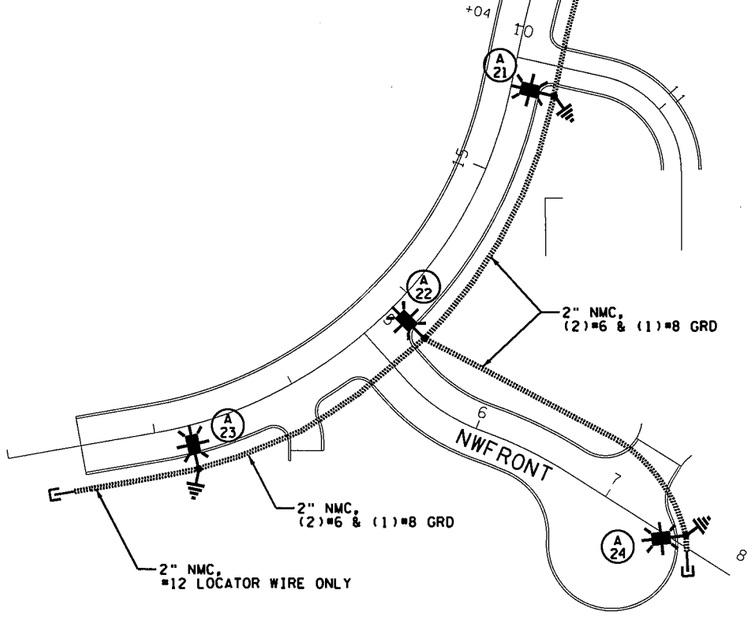

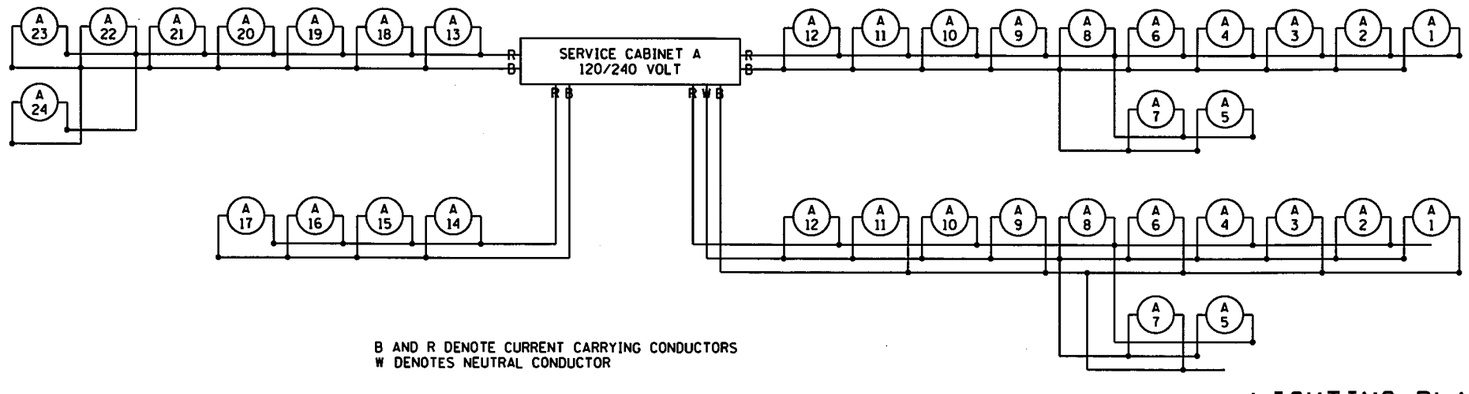

B AND R DENOTE CURRENT CARRYING CONDUCTORS
W DENOTES NEUTRAL CONDUCTOR

LIGHTING PLAN

CERTIFIED BY _____ LICENSED PROFESSIONAL ENGINEER LIC. NO. 8943

STATE PROJ. NO. 179-020-031
STATE PROJ. NO. 019-605-028
STATE PROJ. NO. 1901-148 (T.H. 13) Sheet No. SLC4 of SLC5 Sheets

S:\AE\B\Burns\118582\Hwy 5 & 13 Lighting\1901-148\plnshts\1901-148.LT.dgn LT4 mtron 6/13/2012 2:22:56 PM

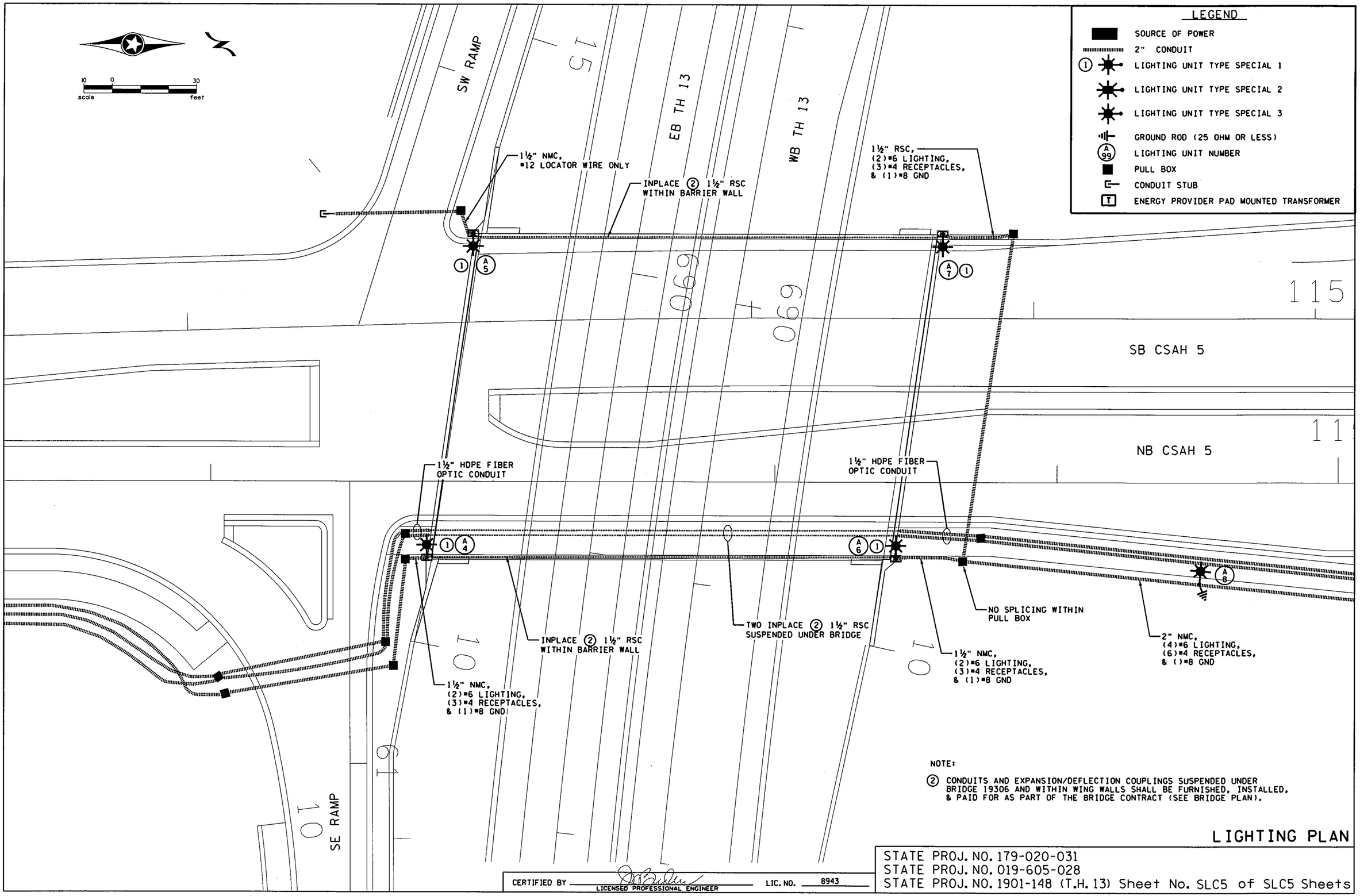

LIGHTING PLAN

STATE PROJ. NO. 179-020-031
STATE PROJ. NO. 019-605-028
STATE PROJ. NO. 1901-148 (T.H. 13) Sheet No. SLC5 of SLC5 Sheets

S:\AE\B\Burns\118582\Hwy 5 & 13 Lighting\1901-148\plnshts\1901-148_LT.dgn LT5 mtran 6/13/2012 2:22:57 PM

PLOTTED/REVISED: 7/27/2012
DISTRICT *: METRO
IPLOT NAME: T1901-148_TABULATIONS
PATH & FILENAME: IP_PWP:dl432276\T1901-148_TABULATIONS.DGN

PERMANENT SIGNING TABULATION

ST

TAB	SHEET NO	ITEM	UNIT	TOTAL SIGNING QUANTITIES	INTERCHANGE SIGNING QUANTITIES	179-020-031 SIGNING QUANTITIES	100% STATE SIGNING QUANTITIES
		REMOVE DELINEATOR	EACH	30	15		15
		REMOVE MARKER	EACH	3	1		2
STK	ST7	REMOVE SIGN TYPE A	EACH	1			1
		REMOVE SIGN TYPE C	EACH	103	94	7	2
STC	ST5	REMOVE SIGN TYPE D	EACH	10	8		2
STB	ST3	SALVAGE SIGN TYPE C	EACH	4	2	1	1
STI	ST8	CONCRETE FOOTINGS (TYPE OH SPREAD)	CU YD	23.0	11.5		11.5
STI	ST8	STRUCT STEEL-POSTS FOR OH SIGNS (B)	POUND	7802.0	3566.0		4236.0
STI	ST8	STRUCT STEEL-TRUSSES FOR OH SIGNS (B)	POUND	7565.0	3752.0		3813.0
STF	ST6	STR STEEL-TRUSSES FOR OH SIGNS BR MTD	POUND	1360.0	1360.0		
STI	ST8	STR STEEL-PANEL MT PST FOR OH SIGNS (B)	POUND	628.0	246.0		382.0
STA	ST2	SIGN PANELS TYPE C	SQ FT	734.8	643.0	59.8	32.0
STD	ST4	SIGN PANELS TYPE D	SQ FT	313.3	253.3		60.0
STE	ST6	SIGN PANELS TYPE OVERLAY	SQ FT	62.5	51.3		11.3
STJ	ST7	SIGN PANELS TYPE OH	SQ FT	579.8	375.5		204.3
STB	ST3	INSTALL SIGN TYPE C	EACH	4	2	1	1
STH	ST6	DELINEATOR TYPE X4-6	EACH	30	15		15
STG	ST6	REFERENCE POST MARKER	EACH	2	2		
STH	ST6	HAZARD MARKER X4-2	EACH	18	14	2	2

INDEX

SIGNING SHEET NO.	DESCRIPTION
ST1	TITLE SHEET
ST2-ST8	TABULATIONS
ST9-ST17	INPLACE
ST18-ST25	PERMANENT
ST26-ST27	PANEL LAYOUTS
ST28-ST46	DETAILS
ST47-ST48	X-SECTIONS

I HEREBY CERTIFY THAT SHEETS ST1-ST48 WERE PREPARED BY ME OR UNDER MY DIRECT SUPERVISION AND THAT I AM A DULY LICENSED PROFESSIONAL ENGINEER UNDER THE LAWS OF THE STATE OF MINNESOTA.

PRINT NAME: TIFFANY KAUTZ LICENSE # 45918
DATE: 7/27/2012 SIGNATURE: Tiffany Kautz
DESIGN SQUAD B BARRETT

SIGNING - TITLE SHEET

S.P.179-020-031 S.P.019-605-028

SIGN PANELS TYPE C

STA	SIGN NO	INTERCHANGE QUANTITY	SP 179-020-031 QUANTITY	100% STATE QUANTITY	QTY	POSTS NO & TYPE	POSTS KNEE BRACES QTY	POSTS LEN FEET	MTG HT (1) FEET	PANEL SIZE INCH	PANEL AREA SQ FT	PANEL INTERCHANGE QTY SQ FT	PANEL SP 179-020-031 QTY SQ FT	PANEL 100% STATE QTY SQ FT	PANEL TOTAL AREA SQ FT	CODE NO	PANEL LEGEND	
	C-1	4			4	2-U		15	7	30 x 30	6.25	25.00			25.00	R1-1	STOP	
	C-2	11	2		13	2-U		15	7	30 x 30	6.25	68.75	12.50		81.25	R3-7R	RIGHT LANE MUST TURN RIGHT	
(6)	C-3	2		2	4	1-ST		14	7	48 x 48	16.00	32.00		32	64.00	W9-2R	MERGE	
	C-4	2			2	2-U	1	14	7	30 x 15	3.13	6.25			6.25	M3-3A	SOUTH	
										36 x 36	9.00	18.00			18.00	M1-5A	MINNESOTA 13	(2)
	C-5	3			3	2-U	1	17	7	36 x 48	12.00	36.00			36.00	R2-1	SPEED LIMIT 55	
	C-6	2			2	2-U	1	17	7	48 x 48	16.00	32.00			32.00	W3-3	SIGNAL AHEAD	
	C-7	1			1	(5)			7	42 x 30	8.75	8.75			8.75	R5-1A	WRONG WAY	
	C-8	1			1	(5)			7	36 x 36	9.00	9.00			9.00	R5-1	DO NOT ENTER	
	C-9	1			1	(8)		13	7	24 x 12	2.00	2.00			2.00	M3-3A	SOUTH	
										24 x 24	4.00	4.00			4.00	M1-5A	MINNESOTA 13	
										21 x 15	2.19	2.19			2.19	M6-1A	ARROW	
	C-10	1			1	2-U	1	16	7	36 x 36	9.00	9.00			9.00	R5-1	DO NOT ENTER	
	C-11	1			1	2-U	1	13	7	24 x 24	4.00	4.00			4.00	M1-6	COUNTY 5	
										24 x 30	5.00	5.00			5.00	R12-2	AXLE WEIGHT LIMIT 9 TONS	
(4)	C-12	10	2		12	1-ST		14	7	24 x 30	5.00	50.00	10		60.00	R4-7	KEEP RIGHT	
	C-13	1			1	1-ST		15	7	24 x 12	2.00	2.00			2.00	M3-1A	NORTH	
(4)										24 x 24	4.00	4.00			4.00	M1-5A	MINNESOTA 13	
										21 x 15	2.19	2.19			2.19	M6-1A	ARROW	
(4)	C-14	2	2		4	1-ST		13	7	30 x 30	6.25	12.50	12.5		25.00	R3-7	LEFT LANE MUST TURN LEFT	
	C-15	2			2	2-U	1	15	7	54 x 30	11.25	22.50			22.50	R3-30ACA	LANE DESIGNATION	
(4)	C-16	1			1	1-ST		15	7	36 x 36	9.00	9.00			9.00	W4-3R	ADDED LANE	
(4)	C-17	2			2	1-ST		16	7	36 x 36	9.00	18.00			18.00	R5-1	DO NOT ENTER	
	C-18	1			1	2-U	1	15	7	42 x 30	8.75	8.75			8.75	R5-1A	WRONG WAY	
	C-19	1			1	(7)	1	18	7	48 x 60	20.00	20.00			20.00	W13-2	EXIT 20 MPH	
	C-20	1			1	2-U		15	7	30 x 30	6.25	6.25			6.25	R3-7	LEFT LANE MUST TURN LEFT	
	C-21	1			1	2-U		15	7	30 x 30	6.25	6.25			6.25	W1-1R	TURN	
(4)	C-22	8			8	1-ST		15	7	30 x 30	6.25	50.00			50.00	R5-1	DO NOT ENTER	
(4)	C-23	1			1	(7)		18	7	48 x 60	20.00	20.00			20.00	R16-X7R	RIGHT LANE MUST EXIT	
	C-24	1			1	2-U	1	14	7	30 x 15	3.13	3.13			3.13	M3-1A	NORTH	
										36 x 36	9.00	9.00			9.00	M1-5A	MINNESOTA 13	(2)
	C-25	2			2	2-U	1	16	7	21 x 15	2.19	4.38			4.38	M2-1A	JCT	
										24 x 24	4.00	8.00			8.00	M1-5A	MINNESOTA 13	(2)
	C-26	1			1	2-U	1	15	7	36 x 30	7.50	7.50			7.50	R3-30AD	LANE DESIGNATION	
	C-27	1			1	(8)		11	7	30 x 30	6.25	6.25			6.25	R5-1	DO NOT ENTER	
	C-28		1		1	2-U	1	16	7	36 x 12	3.00		3		3.00	R6-1R	ONE WAY	
										30 x 30	6.25		6.25		6.25	R1-1	STOP	(2)
(4)	C-29		1		1	1-ST		9	7	36 x 12	3.00		3		3.00	R6-1R	ONE WAY	
(4)	C-30	2			2	1-ST		10	7	30 x 30	6.25	12.50			12.50	R3-7	LEFT LANE MUST TURN LEFT	
										30 x 30	6.25	12.50			12.50	R3-7	LEFT LANE MUST TURN LEFT	(3)
	C-31	1			1	(5)			7	36 x 30	7.50	7.50			7.50	R3-30AD	LANE DESIGNATION	
	C-32	1			1	2-U		15	7	24 x 30	5.00	5.00			5.00	R2-1	SPEED LIMIT 35	
	C-33	2			2	2-U		15	7	30 x 30	6.25	12.50			12.50	W1-4L	REVERSE CURVE	
(4)	C-34		1		1	1-ST		11	7	30 x 30	6.25		6.25		6.25	R5-1	DO NOT ENTER	
										30 x 30	6.25		6.25		6.25	R5-1	DO NOT ENTER	(3)
	C-35	4			4	2-U	1	14	7	30 x 30	6.25	25.00			25.00	R1-1	STOP	
										18 x 6	0.75	3.00			3.00	R1-3P	ALL WAY	
	C-36	1			1	(9)			7	48 x 18	6.00	6.00			6.00	R6-1L	ONE WAY	
										48 x 18	6.00	6.00			6.00	R6-1R	ONE WAY	(3)
	C-37	1			1	1-U	1	15	7	24 x 12	2.00	2.00			2.00	M3-3A	SOUTH	
										24 x 24	4.00	4.00			4.00	M1-5A	MINNESOTA 13	
										21 x 15	2.19	2.19			2.19	M6-3A	ARROW	
	C-38	1			1	1-U				24 x 12	2.00	2.00			2.00	M3-1A	NORTH	
										24 x 24	4.00	4.00			4.00	M1-5A	MINNESOTA 13	
										21 x 15	2.19	2.19			2.19	M6-1A	ARROW	
	C-39	1			1	(8)		11	7	24 x 30	5.00	5.00			5.00	R4-7	KEEP RIGHT	
										SUBTOTAL	643.0	59.8	32.0		734.8			

SPECIFIC NOTES:

(1) MOUNTING HEIGHT IS MINIMUM WITH A +6 INCH TOLERANCE. SEE SHEET NO. ST31 FOR TYPICAL MOUNTING.
(2) FOR PUNCHING AND MOUNTING DETAILS, SEE SHEET NO. ST32.
(3) MOUNT BACK TO BACK
(4) MOUNT IN CONCRETE, SEE SHEET NO. ST33.
(5) WALL RAIL MOUNT , SEE SHEET NO. ST34
(6) PLACE PER MANUFACTURER'S DETAIL USING A 10 GAUGE, 2-1/2" x 2-1/2" PRE-PUNCHED, GALVANIZED STEEL, SQUARE TUBE POST WITH A 10 GAUGE, 2-3/16" x 2-3/16" x 8', PRE-PUNCHED GALVANIZED STEEL INTERNAL SQUARE TUBE INSERT. THIS ASSEMBLY REQUIRES STRINGERS AND SLIP BASES.
(7) MOUNT TO WALL
(8) MOUNTED ON BRIDGE MEDIAN ISLAND. SEE SHEET ST36
(9) BRIDGE RAIL MOUNT, SEE SHEET ST35

GENERAL NOTES:

1. POST LENGTHS ARE APPROXIMATE AND INCLUDE EMBEDMENT, BUT DO NOT INCLUDE ADDITIONAL LENGTH REQUIRED FOR SPLICE.
2. SEE SHEETS ST30 TO ST32 FOR STRUCTURAL DETAILS.
3. SEE STANDARD SIGNS MANUAL FOR PUNCHING CODE AND DETAILED DRAWINGS OF TYPE C SIGN PANELS.

S.P. 179-020-031 S.P. 019-605-028

STB	SALVAGE & INSTALL SIGN TYPE C										
SIGN NO	INTERCHANGE QUANTITY	SP 179-020-031 QUANTITY	100% STATE QUANTITY	QTY	POSTS NO & TYPE	POSTS KNEE BRACES QTY	POSTS LEN FEET	MTG HT (1) FEET	PANEL SIZE INCH		PANEL LEGEND
C-201			1	1	2-U	1	16	7	60 x	36	ADOPT A HIGHWAY-MASONIC LODGE #6
C-202	1			1	2-U	1	16	7	60 x	36	ADOPT A HIGHWAY-ST JAMES LUTHERAN CHURCH
C-203		1		1	2-U		15	7	24 x	30	ADOPT A STREET- BURNSVILLE WEED & SEED
C-204	1			1	2-U		15	7	24 x	30	BURNSVILLE PARKING RESTRICTIONS
TOTAL	2	1	1	4							

SPECIFIC NOTES:

(1) MOUNTING HEIGHT IS MINIMUM WITH A +6 INCH TOLERANCE. SEE SHEET NO. ST31 FOR TYPICAL MOUNTING.

GENERAL NOTES:

1. POST LENGTHS ARE APPROXIMATE AND INCLUDE EMBEDMENT, BUT DO NOT INCLUDE ADDITIONAL LENGTH REQUIRED FOR SPLICE.
2. SEE SHEETS ST30 TO ST32 FOR STRUCTURAL DETAILS.
3. SEE STANDARD SIGNS MANUAL FOR PUNCHING CODE AND DETAILED DRAWINGS OF TYPE C SIGN PANELS.

PLOTTED/REVISED: 7/17/2012

STD — SIGN PANELS TYPE D

	SIGN NO	INTERCHANGE QUANTITY	100% STATE QUANTITY	QTY	POSTS NO & TYPE	POSTS KNEE BRACES QTY	POSTS LENGTH FEET	POSTS SPACING INCH	MTG HT (1) FEET	PANEL SIZE INCH	PANEL AREA SQ FT	PANEL INTERCHANGE QTY SQ FT	PANEL 100% STATE QTY SQ FT	PANEL TOTAL AREA SQ FT	PANEL LEGEND
	D-1	1		1	2-U	2	18	66	7	108 x 66	49.50	49.50		49.50	5 ⇗
(2)(3)	D-2	1	1	2	2-ST		13	42	7	72 x 60	30.00	30.00	30.00	60.00	EXIT ⇗ 60 DEG
(2)(3)	D-3	1	1	2	2-ST		13	42	7	72 x 60	30.00	30.00	30.00	60.00	EXIT ⇗ 45 DEG
	D-4	1		1	2-U	2	16	72	7	120 x 36	30.00	30.00		30.00	⇦ Greenwood Dr Williams Dr ⇨
	D-5	1		1	2-U	2	19	54	7	78 x 78	42.25	42.25		42.25	⇧ NORTH 13 SOUTH ⇨
	D-6	1		1	3-U	3	19	45	7	132 x 78	71.50	71.50		71.50	5 EXIT 1/4 MILE
										TOTAL		253.3	60.0	313.3	

SPECIFIC NOTES:

(1) MOUNTING HEIGHT IS MINIMUM WITH A+6 INCH TOLERANCE. SEE SHEET NO. ST31 FOR TYPICAL MOUNTING.

(2) SEE STANDARD SIGNS MANUAL (E5-1).

(3) PLACE PER MANUFACTURER'S DETAIL USING A 10 GAUGE, 2-1/2" x 2-1/2" PRE-PUNCHED, GALVANIZED STEEL, SQUARE TUBE POST WITH A 10 GAUGE, 2-3/16" x 2-3/16" x 8', PRE-PUNCHED GALVANIZED STEEL INTERNAL SQUARE TUBE INSERT. THIS ASSEMBLY REQUIRES STRINGERS AND SLIP BASES.

GENERAL NOTES:

1. POST LENGTHS ARE APPROXIMATE AND INCLUDE EMBEDMENT, BUT DO NOT INCLUDE ADDITIONAL LENGTH REQUIRED FOR SPLICE.
2. SEE SHEETS ST30 TO ST32 FOR STRUCTURAL DETAILS.
3. SEE STANDARD SIGNS MANUAL FOR TYPE D STRINGER AND PANEL JOINT DETAILS.
4. SEE SHEETS ST26 FOR SIGN PANELS.

DISTRICT #: METRO
IPLOT NAME: T1901-148_TABULATIONS8
PATH & FILENAME: IP_PWP:d1432276\T1901-148_TABULATIONS.DGN

S.P. 179-020-031 S.P. 019-605-028

SIGNING-TABULATIONS

DRAWN BY: BB	CHECKED BY:	CERTIFIED BY Tiffany Hauth LICENSED PROFESSIONAL ENGINEER LIC. NO. 45918 DATE 7/17/2012	STATE PROJ. NO. 1901-148 (TH 13) SHEET NO. ST4 OF ST48 SHEETS

STC	REMOVE SIGN TYPE D							
SIGN NO	INTERCHANGE QUANTITY	SP 179-020-031 QUANTITY	100% STATE QUANTITY	TOTAL QTY	POSTS NO & TYPE	POSTS KNEE BRACES QTY	PANEL SIZE (1) INCH	PANEL LEGEND
D-101	2			2	2-U	1	42 x 54	JCT 5
D-102	1			1	2-U	2	54 x 78	COUNTY 5 RIGHT ARROW
D-103	1			1	3-U	3	108 x 90	ALBERT LEA/ MINNEAPOLIS RIGHT LANE
D-104	1			1	3-U	3	66 x 54	VALLEY DR / ARROW
D-105	1			1	2-U	2	54 x 78	COUNTY 5 LEFT ARROW
D-106	1			1	2-U	2	120 x 48	SAVAGE 2 SHAKOPEE 11
D-107			2	2	2-U	2	72 x 60	EXIT
D-108	1			1	2-U	2	96 x 24	LEFT ARROW GREENWOOD DR WILLIAMS DR RIGHT ARROW
TOTAL	8	0	2	10				

NOTE:
(1) SIZES ARE APPROXIMATE

S.P. 179-020-031 S.P. 019-605-028

SIGNING-TABULATIONS

DRAWN BY: BB | CHECKED BY: | CERTIFIED BY Tiffany Kauth LICENSED PROFESSIONAL ENGINEER | LIC. NO. 45918 | DATE 6/11/2012

STATE PROJ. NO. 1901-148 (TH 13) SHEET NO. ST5 OF ST48 SHEETS

PLOTTED/REVISED: 6/11/2012
DISTRICT #: METRO
IPLOT NAME: T1901-148_TABULATIONS3
PATH & FILENAME: IP_PWP:d1432276\T1901-148_TABULATIONS.DGN

STG	REFERENCE POST MARKER				
	CODE NO	INTERCHANGE QTY	QTY	SIZE INCH	LEGEND
(1)	D10-2	2	2	12 x 36	MILE 95
	TOTAL	2	2		

SPECIFIC NOTE:
(1) MOUNT BELOW C-5 ON LEFT POST.

STF	STRUCT. STEEL TRUSSES TYPE OH BR. MTD-INTERCHANGE (1)(2)	
OH SIGN NO.	BRIDGE NO.	POUNDS
13-004	BR.19036	620
13-005	BR.19036	740
TOTAL		1360

SPECIFIC NOTES:
(1) SEE SHEET ST38 & ST39 FOR DETAILS.
(2) INCLUDES F&I OH SIGN IDENTIFICATION PLATE, SEE SHEET ST37.

STH	DELINEATORS & MARKERS(2)				
CODE NO	INTERCHANGE QTY	179-020-031 QTY	100 % STATE QTY	QTY	LOCATION
WHITE X4-6	6		6	12	EXIT NOSE
YELLOW X4-6	9		9	18	EXIT NOSE
(1)(3) HAZARD MARKER X4-2	4		2	6	EXIT NOSE
(3) HAZARD MARKER X4-2	10	2		12	MOUNT BELOW C-12

SPECIFIC NOTES:
(1) MOUNT ON 3LB/FT POST (MNDOT 3401).
(2) SEE STANDARD SIGNS MANUAL FOR DELINEATOR AND MARKER DETAILS.
(3) BLACK BACKROUND.

GENERAL NOTES:
1. FOR DELINEATOR AND MARKER PLACEMENT, SEE SHEET NO. ST29.
2. SEE ROADWAY LAYOUTS FOR DELINEATOR AND MARKER LOCATIONS.

STJ	SIGN PANELS TYPE OH							
OH SIGN NO.	LOCATION	PANEL SIZE (IN.)	PANEL AREA (SQ. FT.)	PANEL SIZE (IN.)	PANEL AREA (SQ. FT.)	INTERCHANGE QTY (SQ FT)	100% STATE QTY (SQ FT)	TOTAL AREA (SQ. FT.)
13-004	BR.19036	174 x 132	159.50			159.50		159.50
13-005	BR.19036	156 x 96	104.00			104.00		104.00
13-006	WB TH 13 STA 705+25	168 x 96	112.00			112.00		112.00
13-007	WB TH 13 STA 732+83	138 x 84	80.50	198 x 90	123.75		204.25	204.25
TOTAL						375.5	204.3	579.8

GENERAL NOTE:
(1) SEE SHEET ST27 FOR SIGN PANELS.

STK	REMOVE SIGN TYPE A - 100% STATE						
SIGN NO	LOCATION	PANEL SIZE EXTRUDED TYPE (INCH)	PANEL SIZE FLAT SHEET (INCH)	POSTS SIZE BREAK-AWAY	POSTS SIZE NON BREAK-AWAY	L1 (FEET)	L2 (FEET)
A-101	WB TH13 STA 735+25	198 x 108	x	W 8 x 24	x	16.5	21.5

S.P. 179-020-031 S.P. 019-605-028

SIGNING-TABULATIONS

DRAWN BY: BB | CHECKED BY: | CERTIFIED BY Tiffany Kurth (LICENSED PROFESSIONAL ENGINEER) LIC. NO. 45918 DATE 6/11/2012

STATE PROJ. NO. 1901-148 (TH 13) SHEET NO. ST7 OF ST48 SHEETS

PLOTTED/REVISED: 6/11/2012
DISTRICT *: METRO
IPLOT NAME: T1901-148_TABULATIONS2
PATH & FILENAME: \\P_PWP-d1432276\T1901-148_TABULATIONS.DGN

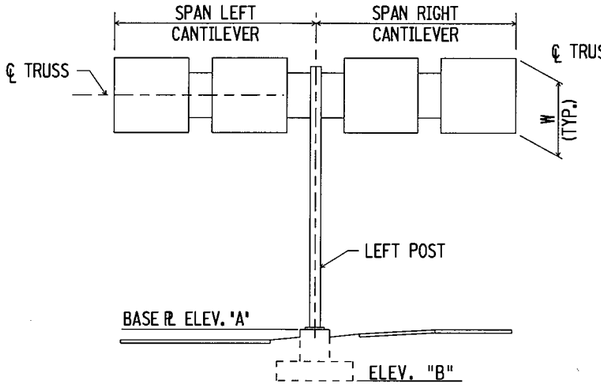

BRIDGE TYPE BC

BUTTERFLY AND CANTILEVER SPANS

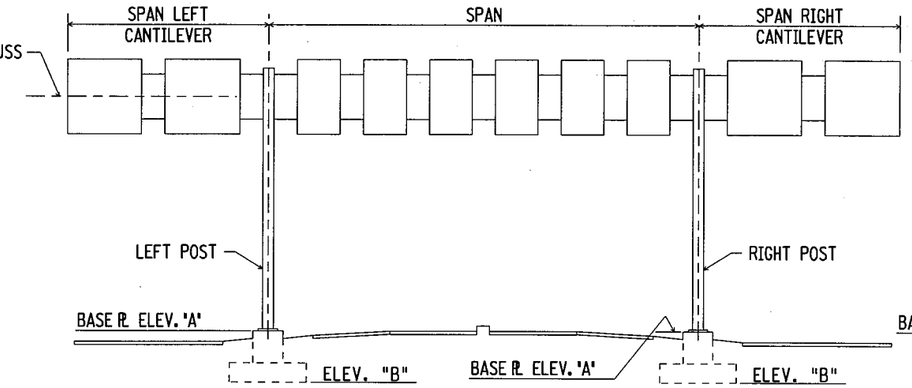

BRIDGE TYPE S

SIMPLE SPAN WITH CANTILEVERS

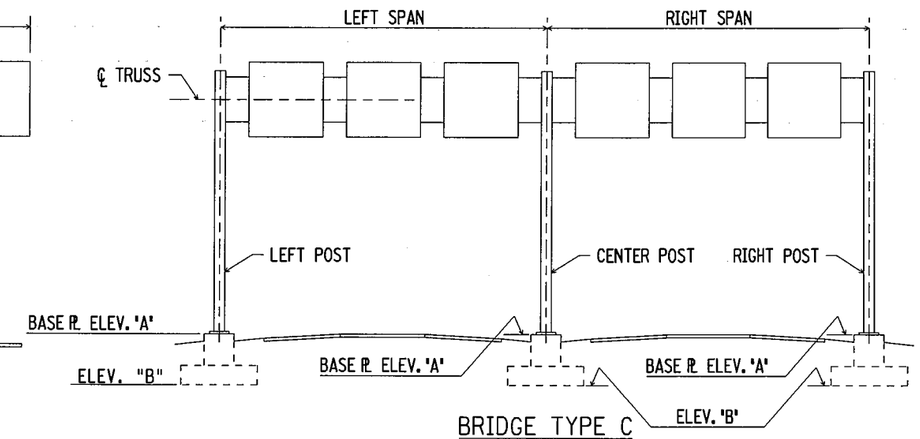

BRIDGE TYPE C

CONTINUOUS SPANS

OVERHEAD SIGN STRUCTURES (2)

OH SIGN NO.	STATION	BRIDGE TYPE	TRUSS TYPE	SPAN LENGTHS				LOW STEEL ELEVATION SEE ST-1	LEFT POST			CENTER POST			RIGHT POST		
				LEFT CANT.	RIGHT CANT.	SPAN OR LEFT SPAN	RIGHT SPAN		ELEVATION (1)		TYPE	ELEVATION (1)		TYPE	ELEVATION (1)		TYPE
									A	B		A	B		A	B	
13-006	WB TH 13 STA 705+25	BC	A	30'-6"				118.43	101.43	94.44	3E						
13-007	WB TH 13 STA 732+83	BC	A	31'-0"				118.65	100.09	93.12	4E						

STI TABULATION OF OVERHEAD SIGN STRUCTURE QUANTITIES

OH SIGN NO.		13-006	13-007		INTERCHANGE TOTALS	100% STATE TOTALS	TOTALS
STRUCT. STEEL POSTS (3)	POUNDS	3566.0	4236.0		3566.0	4236.0	7802.0
STRUCT. STEEL TRUSSES	POUNDS	3752.0	3813.0		3752.0	3813.0	7565.0
STRUCT. STEEL WALKWAY SUPPORTS	POUNDS						
STRUCT. STEEL WALKWAY GRATING	POUNDS						
STRUCT. STEEL PANEL MTG. POSTS	POUNDS	246.0	382.0		246.0	382.0	628.0
CONCRETE FOOTINGS (SPREAD)	CU YD	11.5	11.5		11.5	11.5	23.0

OH SIGN IDENTIFICATION PLATE

OH SIGN NO.	LOCATION	IDENTIFICATION PLATE NO.
13-004	BR.19036	13-004
13-005	BR.19036	13-005
13-006	WB TH 13 STA 705+25	13-006
13-007	WB TH 13 STA 732+83	13-007

SPECIFIC NOTES:

(1) CENTER LINE ELEVATION = 100.00.
(2) BASED ON TABULATED ELEVATIONS AND DIMENSIONS.
REVISE IF NECESSARY USING QUANTITY TABLES ON ST-2 SEE SHEET ST41.
(3) INCLUDES F.& I. OH SIGN IDENTIFICATION PLATE, SEE SHEET ST37

GENERAL NOTES:

1. THE SUBSCRIPTION E ON THE POST TYPE DENOTES THE POST WHICH HAS THE HAND HOLE AND PROVISIONS FOR GROUNDING, I.E. POST TYPE 3E.
2. TABULATED ELEVATIONS AND DIMENSIONS ARE APPROXIMATE ONLY. FABRICATION DEPENDENT ON THESE ELEVATIONS AND DIMENSIONS SHALL NOT BE STARTED UNTIL THE ENGINEER HAS MADE FINAL DETERMINATION OF THEM IN THE FIELD.
3. LEFT AND RIGHT DESIGNATIONS ARE SHOWN LOOKING IN DIRECTION OF TRAFFIC FLOW. WHEN TWO DIRECTIONS OF TRAFFIC ARE SPANNED THE DESIGNATIONS ARE SHOWN LOOKING UP STATIONING.
4. SEE SHEETS ST38 TO ST44 FOR DETAILS.
5. SEE SHEETS ST45 & ST46 FOR CROSS SECTIONS.

S.P. 179-020-031 S.P. 019-605-028

SIGNING-TABULATIONS

DRAWN BY: BB | CHECKED BY: | CERTIFIED BY Tiffany Kauth (LICENSED PROFESSIONAL ENGINEER) LIC. NO. 45918 DATE 6/11/2012

STATE PROJ. NO. 1901-148 (TH 13) SHEET NO. ST8 OF ST48 SHEETS

PLOTTED/REVISED: 6/11/2012
DISTRICT *: METRO
IPLOT NAME: T1901-148_TABULATIONS7
PATH & FILENAME: IP_PWP:d1432276\T1901-148_TABULATIONS.DGN

PLOTTED/REVISED: 6/11/2012

DISTRICT #: METRO
IPLOT NAME: T1901_148_ps18
PATH & FILENAME: IP_PWP-d1432276\T1901_148_ps1.dgn

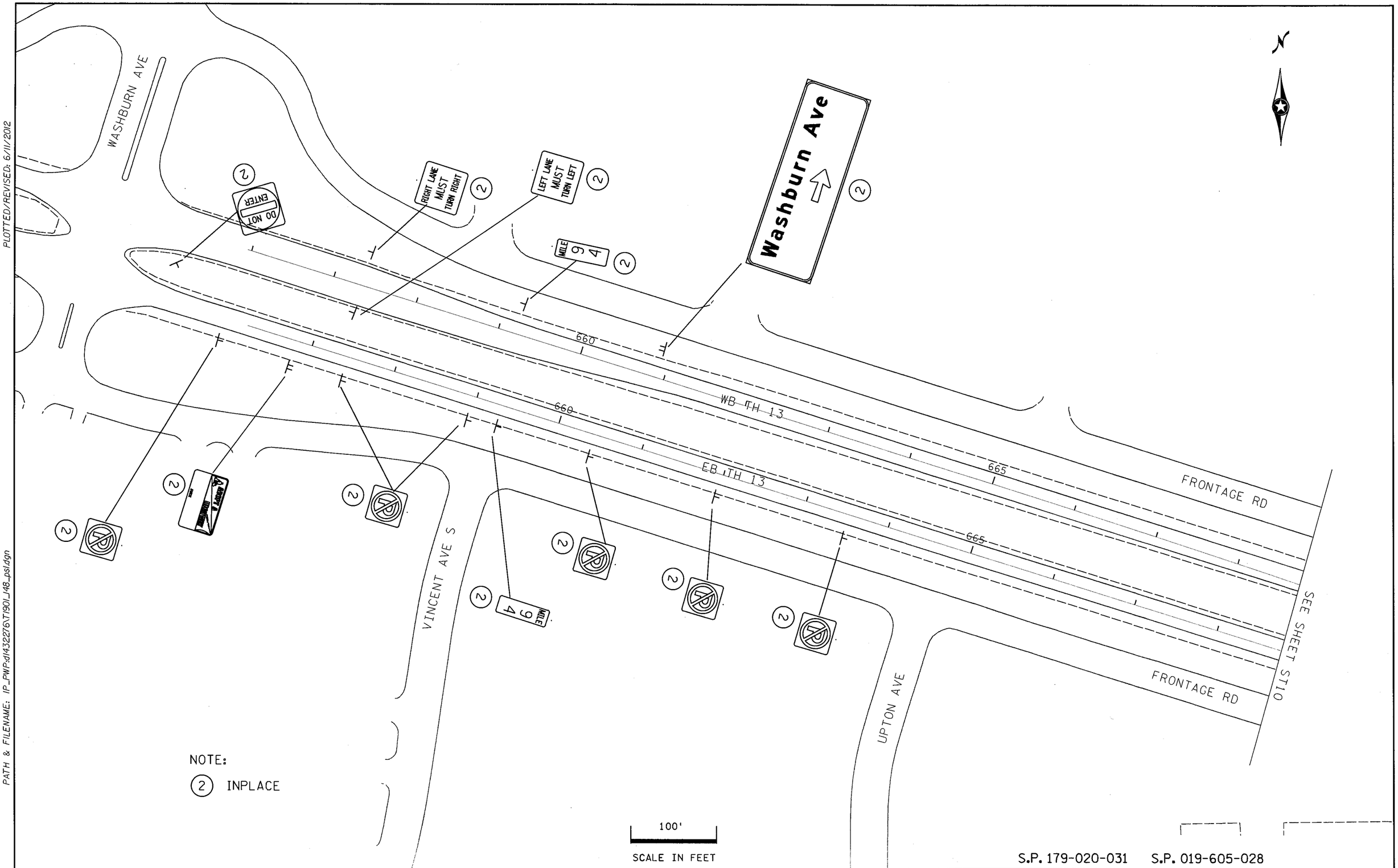

NOTE:

(2) INPLACE

S.P. 179-020-031 S.P. 019-605-028

SIGNING-INPLACE

DRAWN BY: BB	CHECKED BY:	CERTIFIED BY Tiffany Kauth (LICENSED PROFESSIONAL ENGINEER) LIC. NO. 45918 DATE 6/11/2012	STATE PROJ. NO. 1901-148 (TH 13) SHEET NO. ST9 OF ST48 SHEETS

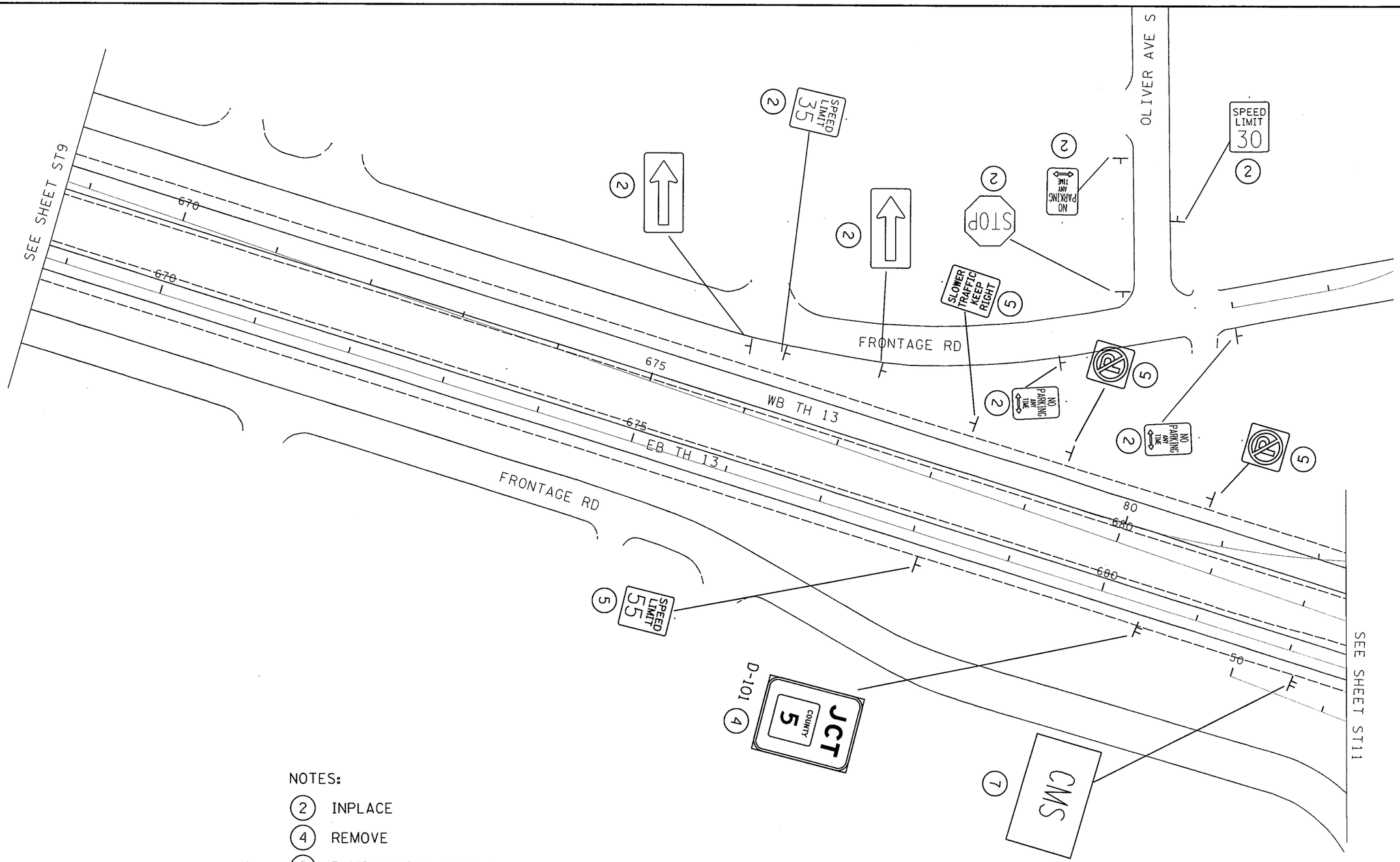

NOTES:

(2) INPLACE

(4) REMOVE

(5) REMOVE SIGN TYPE C

(7) SEE RTMC PLAN

100'

SCALE IN FEET

S.P. 179-020-031 S.P. 019-605-028

SIGNING-INPLACE

DRAWN BY: BB	CHECKED BY:	CERTIFIED BY Tiffany Kautz LICENSED PROFESSIONAL ENGINEER	LIC. NO. 45918	DATE 6/11/2012	STATE PROJ. NO. 1901-148 (TH 13)	SHEET NO. ST10	OF ST48 SHEETS

PLOTTED/REVISED: 6/11/2012

DISTRICT #: METRO
IPLOT NAME: T1901_148_psl9
PATH & FILENAME: IP_PWP:d1432276\T1901_148_psl.dgn

PLOTTED/REVISED: 6/11/2012

DISTRICT #: METRO
IPLOT NAME: T1901_I48_psl10
PATH & FILENAME: IP_PWP:d1432276\T1901_I48_psl.dgn

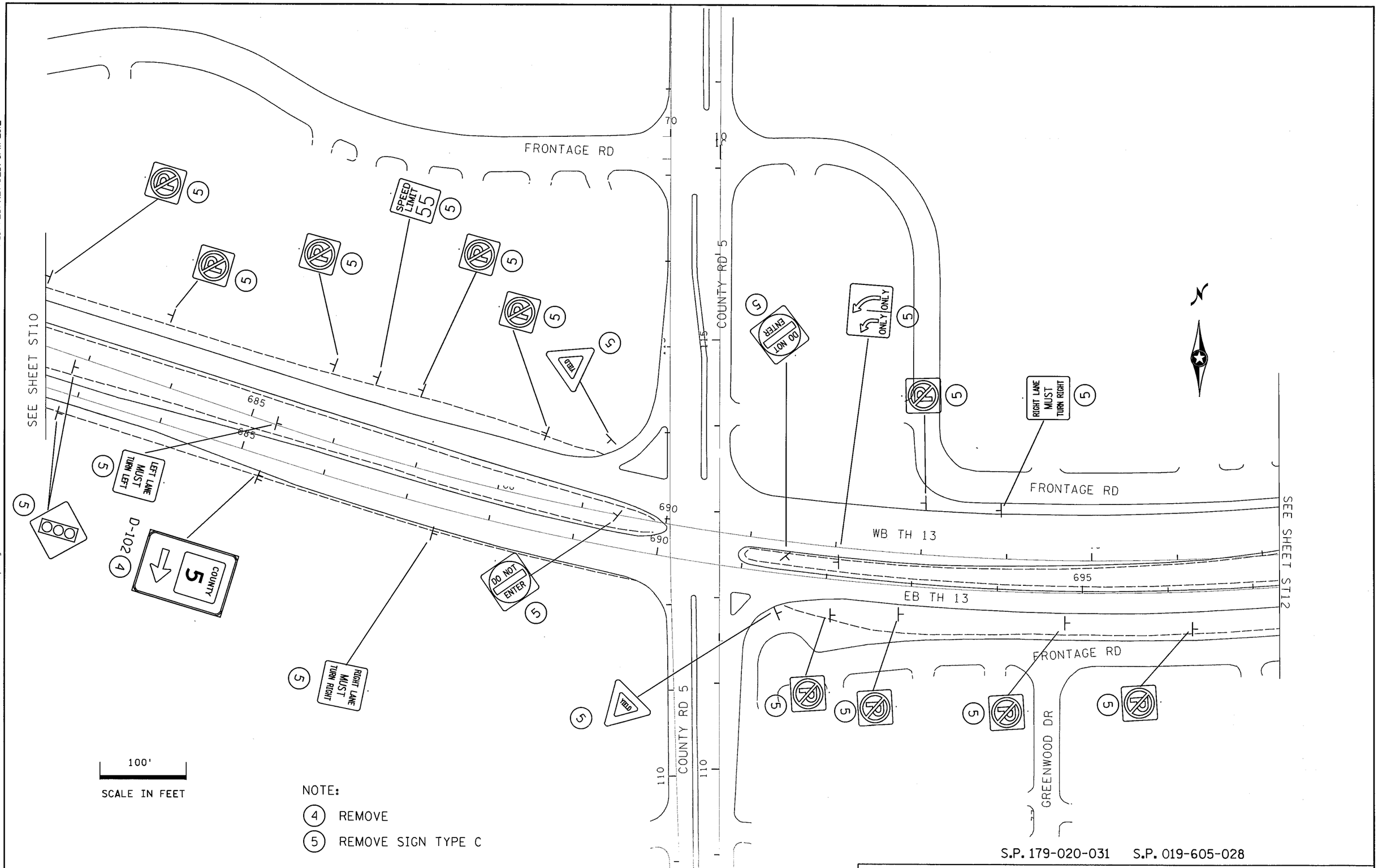

NOTE:

(4) REMOVE

(5) REMOVE SIGN TYPE C

S.P. 179-020-031 S.P. 019-605-028

SIGNING-INPLACE

DRAWN BY: BB	CHECKED BY:	CERTIFIED BY Tiffany Kauth (LICENSED PROFESSIONAL ENGINEER) LIC. NO. 45918 DATE 6/11/2012	STATE PROJ. NO. 1901-148 (TH 13) SHEET NO. ST11 OF ST48 SHEETS

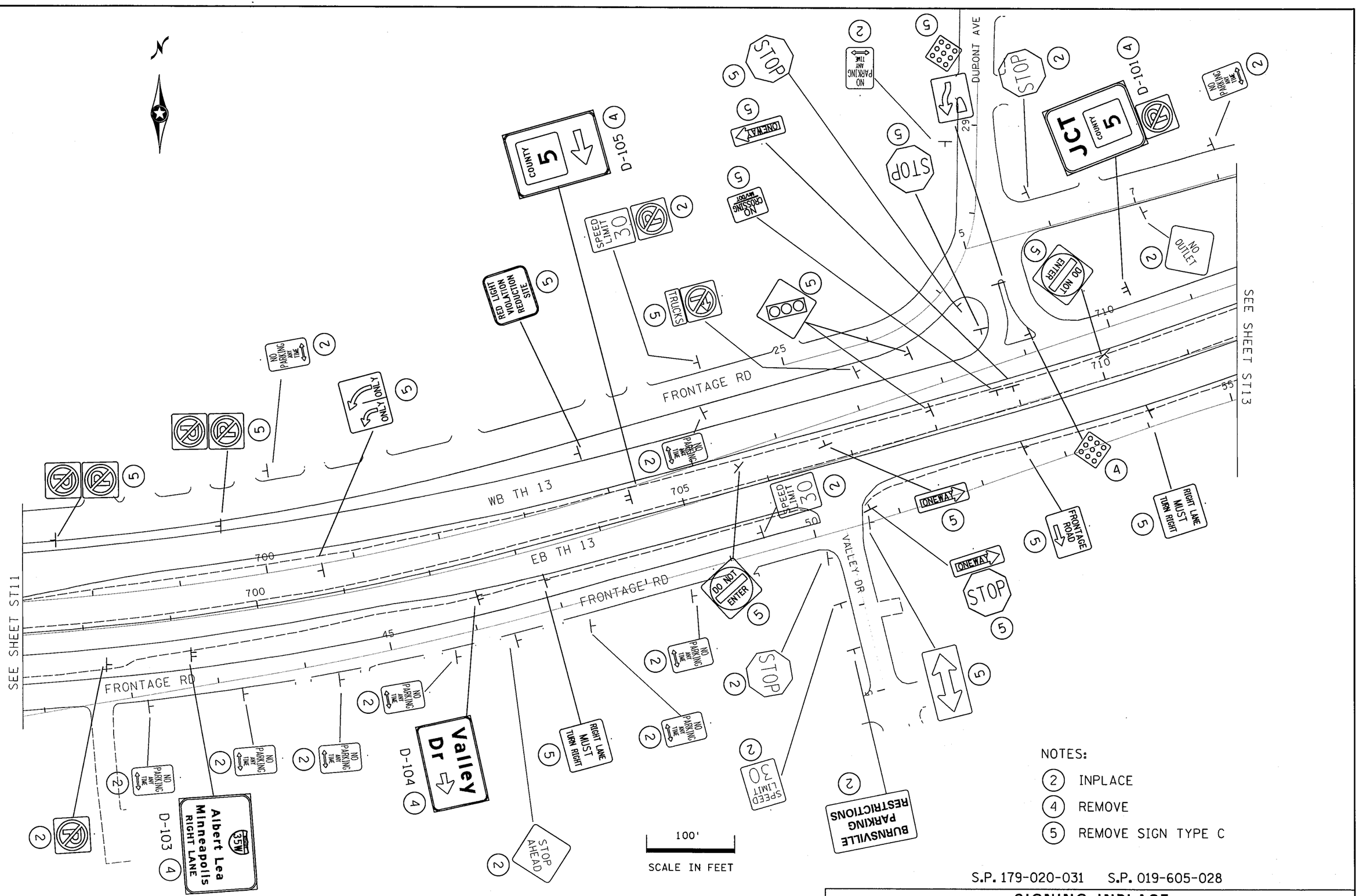

S.P. 179-020-031 S.P. 019-605-028

SIGNING-INPLACE

DRAWN BY: BB	CHECKED BY:	CERTIFIED BY (LICENSED PROFESSIONAL ENGINEER) LIC. NO. 45918 DATE 6/11/2012	STATE PROJ. NO. 1901-148 (TH 13) SHEET NO. ST12 OF ST48 SHEETS

PLOTTED/REVISED: 6/11/2012

DISTRICT #: METRO
IPLOT NAME: T190I_I48_psIII
PATH & FILENAME: IP_PWP:d1432276\T190I_I48_psI.dgn

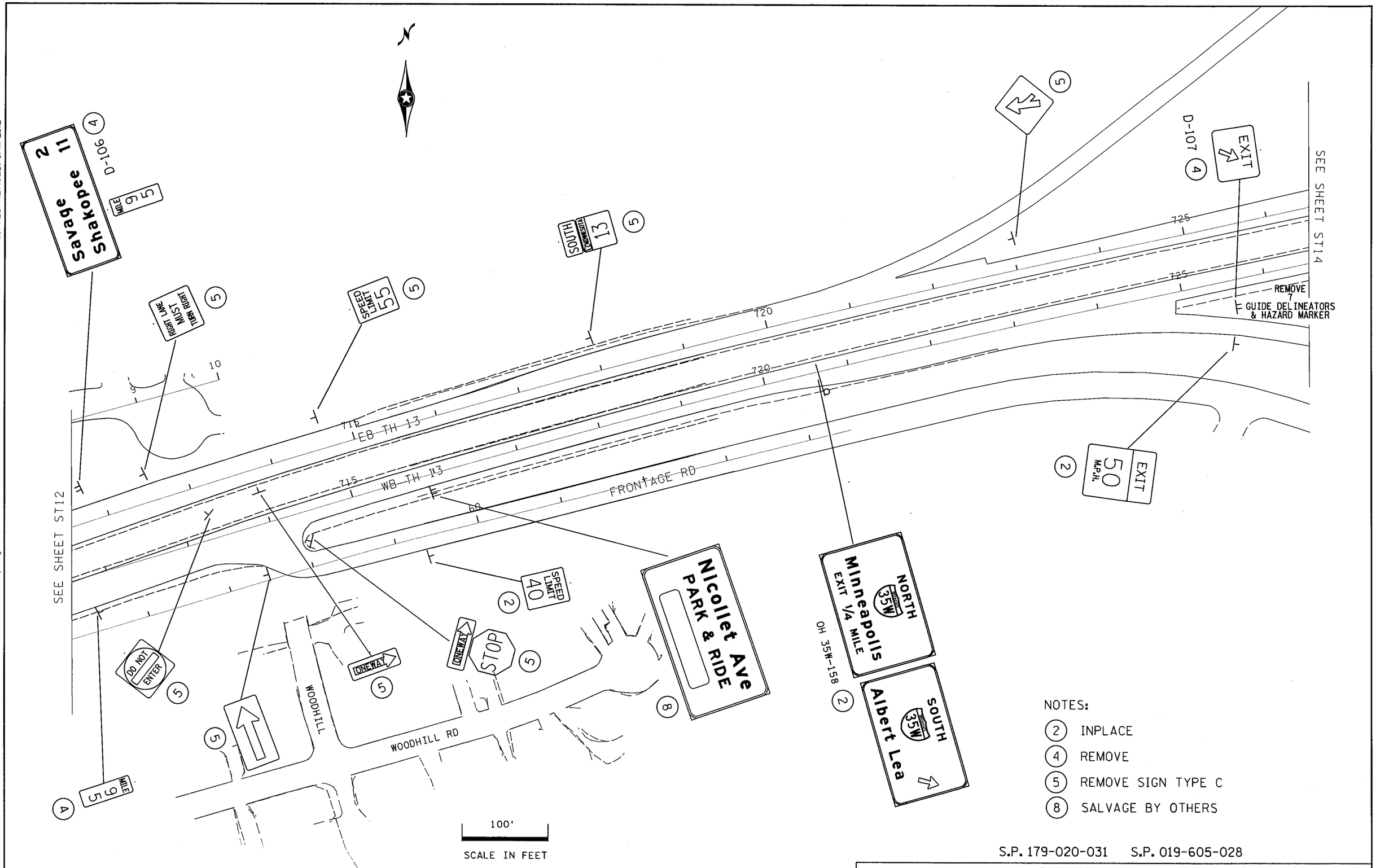

NOTES:

(2) INPLACE
(4) REMOVE
(5) REMOVE SIGN TYPE C
(8) SALVAGE BY OTHERS

S.P. 179-020-031 S.P. 019-605-028

SIGNING-INPLACE

DRAWN BY: BB	CHECKED BY:	CERTIFIED BY Tiffany Kauth (LICENSED PROFESSIONAL ENGINEER) LIC. NO. 45918 DATE 6/11/2012	STATE PROJ. NO. 1901-148 (TH 13) SHEET NO. ST13 OF ST48 SHEETS

PLOTTED/REVISED: 6/11/2012

DISTRICT #: METRO
IPLOT NAME: T1901_148_psl2
PATH & FILENAME: IP_PWF:d1432276\T1901_148_psl.dgn

PLOTTED/REVISED: 6/11/2012

DISTRICT #: METRO
IPLOT NAME: T1901_148_psl13
PATH & FILENAME: IP_PWP:d1432276\T1901_148_psl.dgn

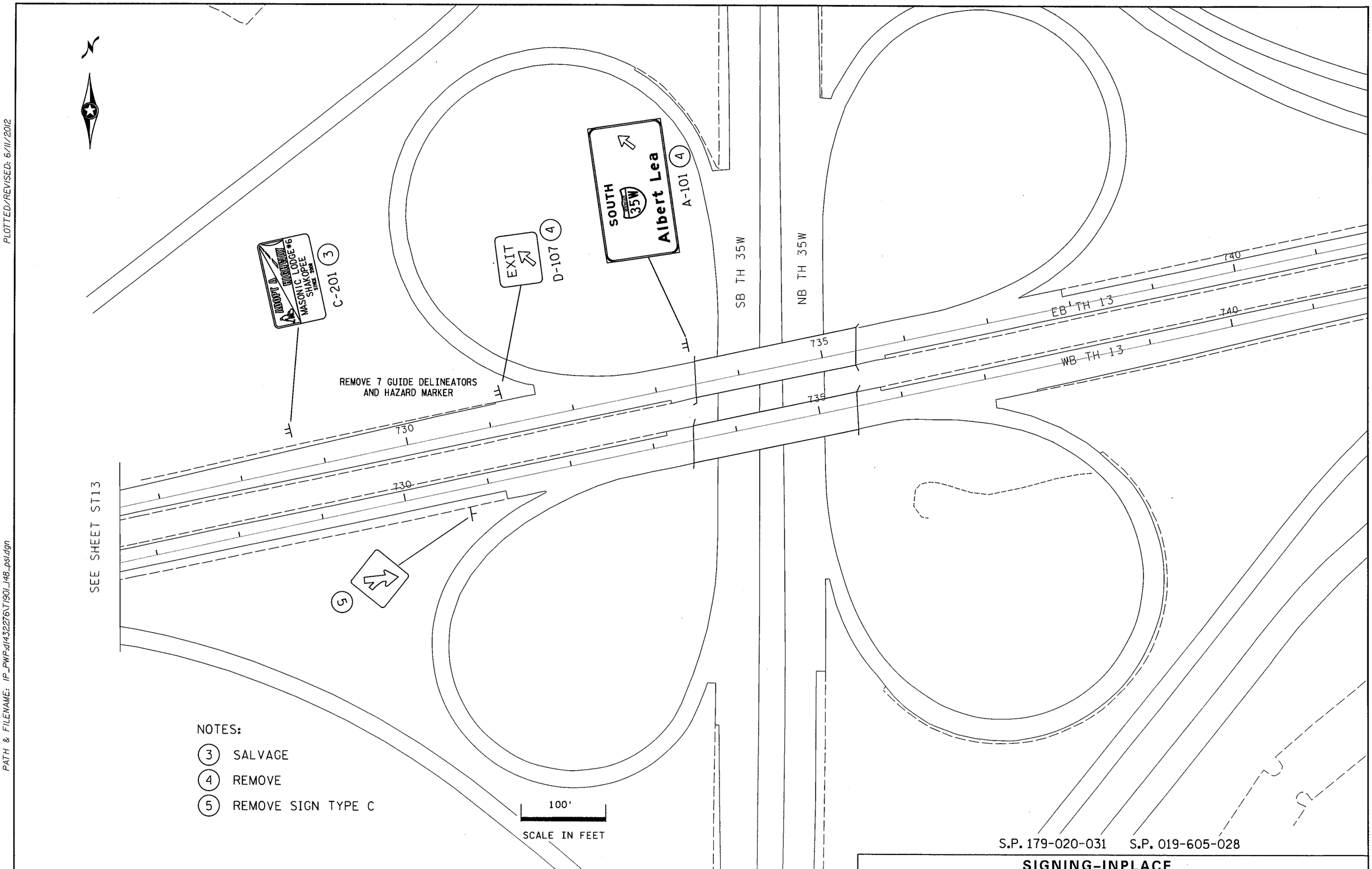

SIGNING-INPLACE

DRAWN BY: BB	CHECKED BY:	CERTIFIED BY Tiffany Kauth LICENSED PROFESSIONAL ENGINEER LIC. NO. 45918 DATE 6/11/2012	STATE PROJ. NO. 1901-148 (TH 13) SHEET NO. ST14 OF ST48 SHEETS

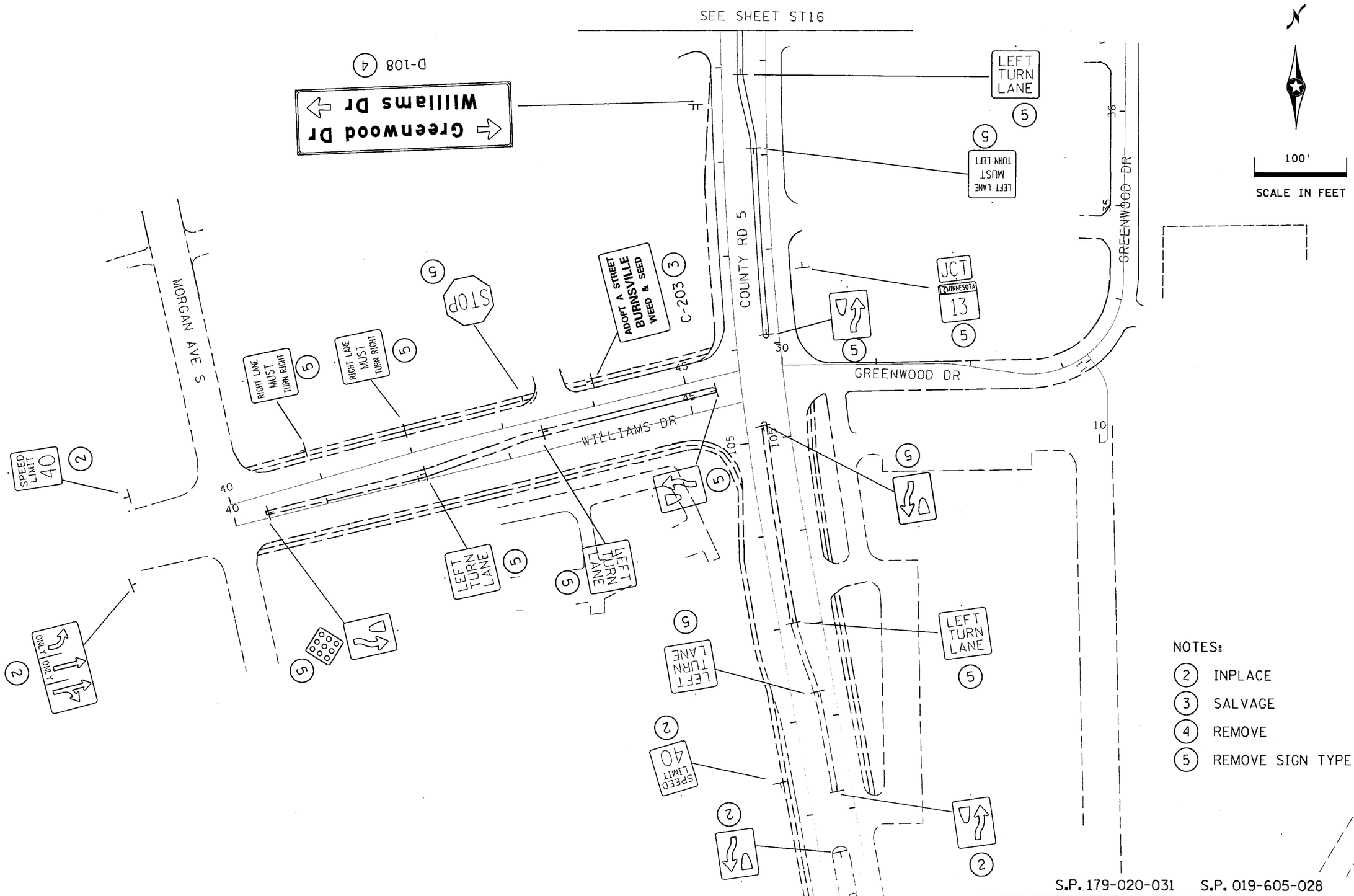

NOTES:

(2) INPLACE
(3) SALVAGE
(4) REMOVE
(5) REMOVE SIGN TYPE C

S.P. 179-020-031 S.P. 019-605-028

SIGNING-INPLACE

DRAWN BY: BB	CHECKED BY:	CERTIFIED BY Tiffany Kauth (LICENSED PROFESSIONAL ENGINEER) LIC. NO. 45918 DATE 6/11/2012	STATE PROJ. NO. 1901-148 (TH 13) SHEET NO. ST15 OF ST48 SHEETS

PLOTTED/REVISED: 6/11/2012

DISTRICT #: METRO
IPLOT NAME: T1901_148_psl14
PATH & FILENAME: IP_PWP:d1432276\T1901_148_psl.dgn

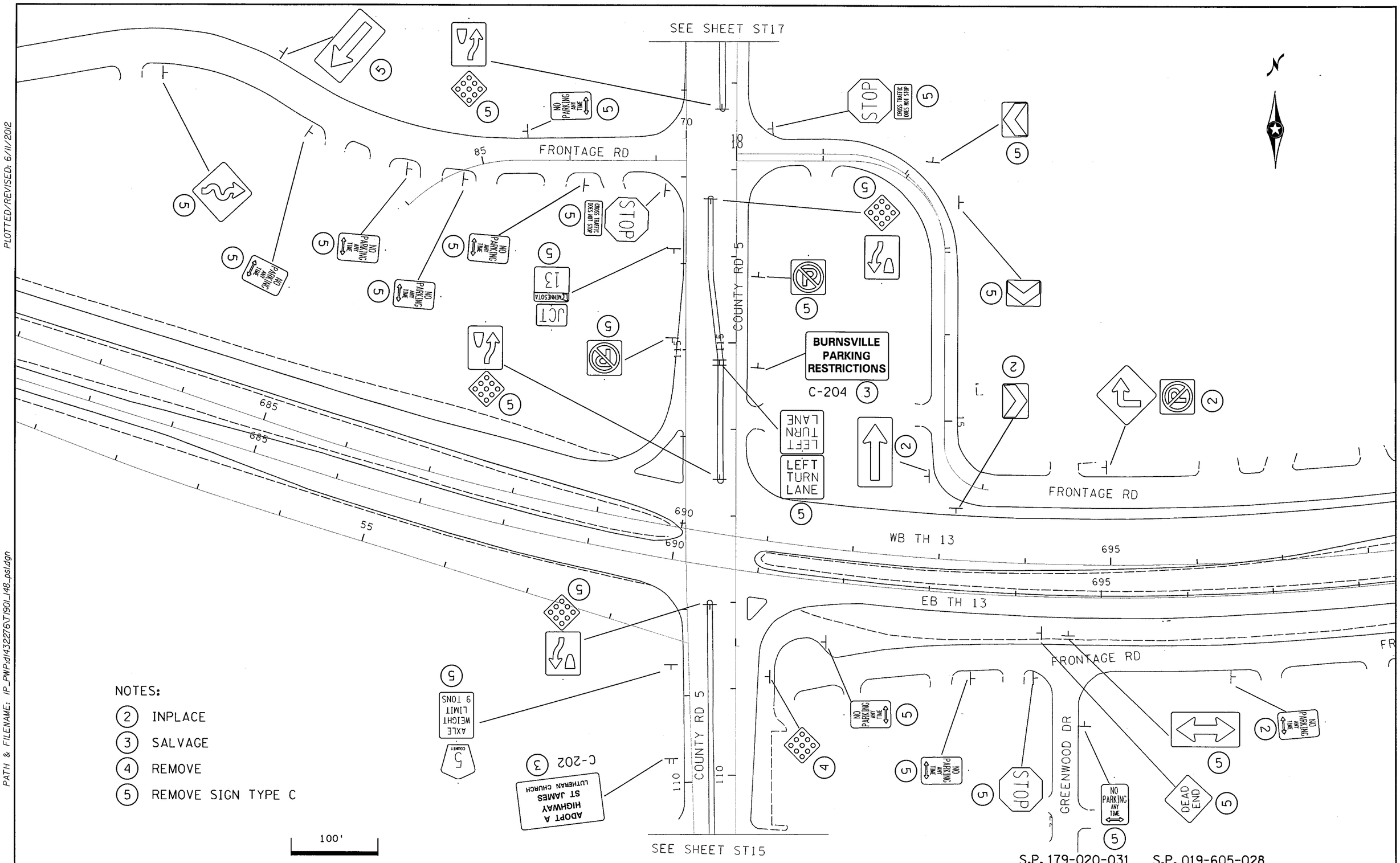

NOTES:

(2) INPLACE

(3) SALVAGE

(4) REMOVE

(5) REMOVE SIGN TYPE C

PLOTTED/REVISED: 6/11/2012

DISTRICT *: METRO
IPLOT NAME: T1901_148_psl15
PATH & FILENAME: IP_PWP-d1432276\T1901_148_psl.dgn

DRAWN BY: BB	CHECKED BY:	CERTIFIED BY Tiffany Kauth (LICENSED PROFESSIONAL ENGINEER) LIC. NO. 45918 DATE 6/11/2012	SIGNING-INPLACE STATE PROJ. NO. 1901-148 (TH 13) SHEET NO. ST16 OF ST48 SHEETS

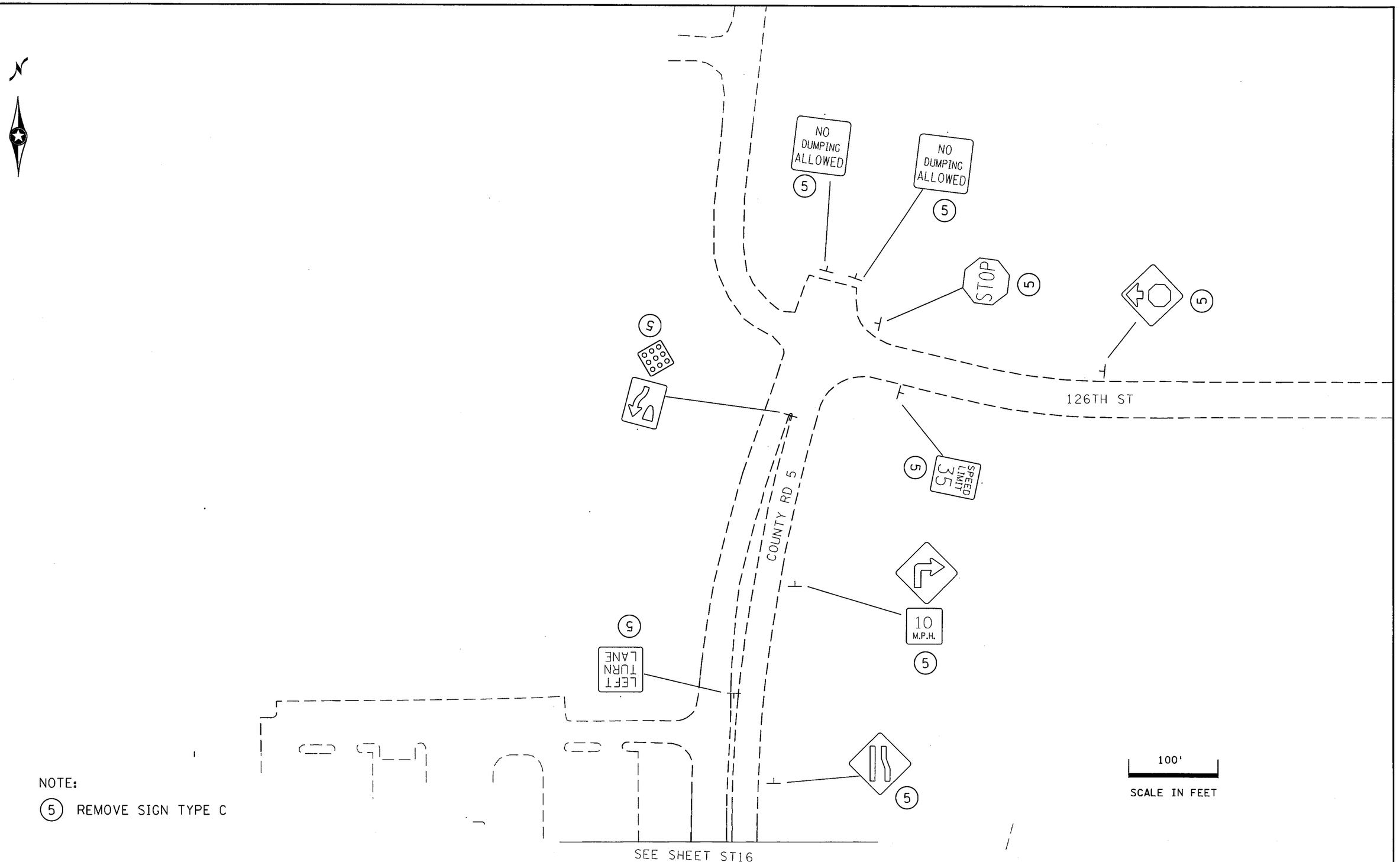

NOTE:

(5) REMOVE SIGN TYPE C

S.P. 179-020-031 S.P. 019-605-028

SIGNING-INPLACE

DRAWN BY: BB	CHECKED BY:	CERTIFIED BY Tiffany Kauth (LICENSED PROFESSIONAL ENGINEER)	LIC. NO. 45918	DATE 6/11/2012	STATE PROJ. NO. 1901-148 (TH 13) SHEET NO. ST17 OF ST48 SHEETS

PLOTTED/REVISED: 6/11/2012

DISTRICT #: METRO
IPLOT NAME: T1901_148_psl16
PATH & FILENAME: IP_PWP:d1432276\T1901_148_psl.dgn

PLOTTED/REVISED: 6/11/2012

DISTRICT #: METRO
IPLOT NAME: 1901-148_ps28
PATH & FILENAME: IP_PWP-d1432276V1901-148_ps2.dgn

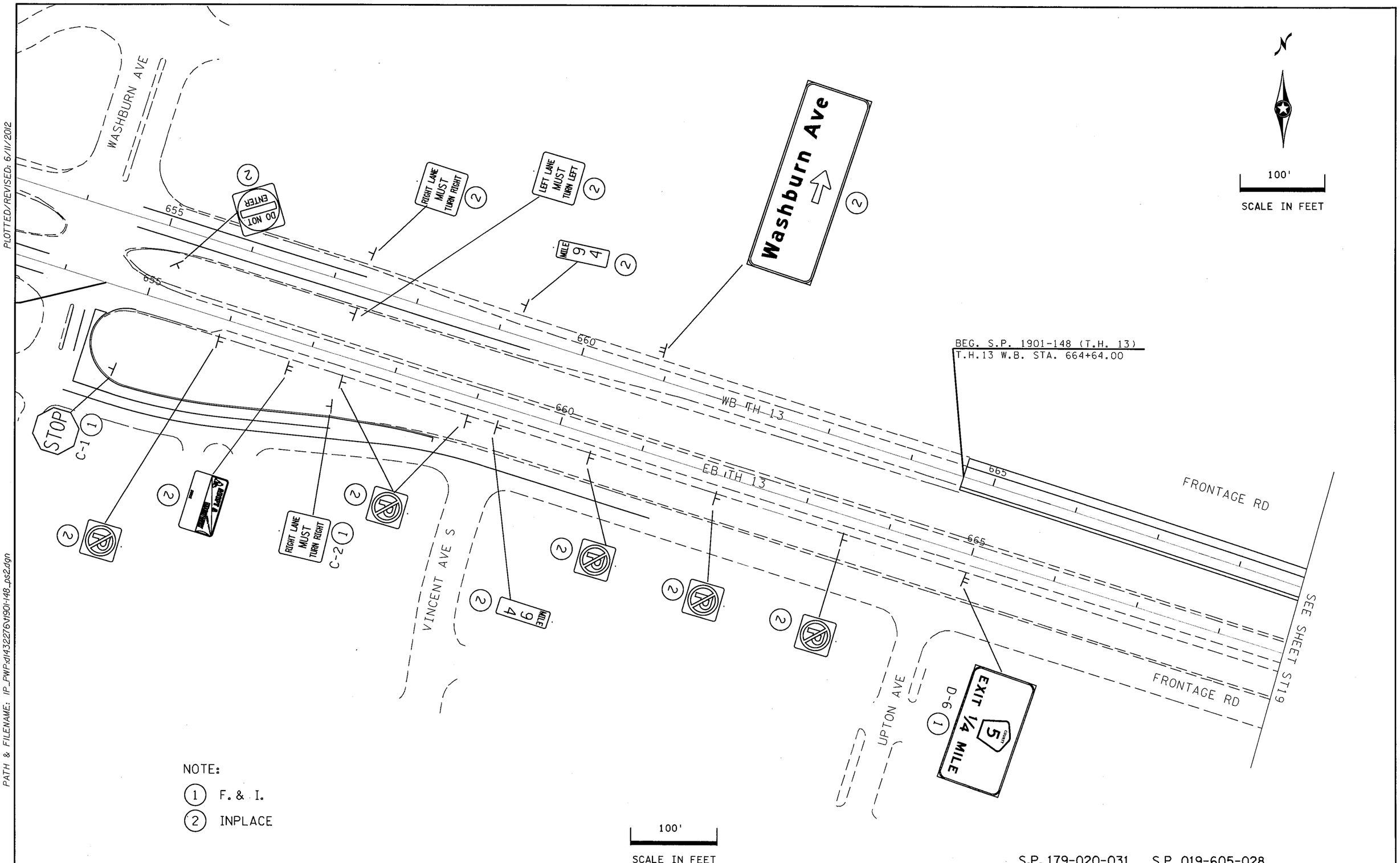

NOTE:

1. F. & I.
2. INPLACE

S.P. 179-020-031 S.P. 019-605-028

SIGNING - PERMANENT

DRAWN BY: BB	CHECKED BY:	CERTIFIED BY Tiffany Kauth (LICENSED PROFESSIONAL ENGINEER) LIC. NO. 45918 DATE 6/11/2012	STATE PROJ. NO. 1901-148 (TH 13) SHEET NO. ST18 OF ST48 SHEETS

PLOTTED/REVISED: 6/11/2012

DISTRICT #: METRO
IPLOT NAME: 1901-148_ps29
PATH & FILENAME: IP_PWP-d1432276\1901-148_ps2.dgn

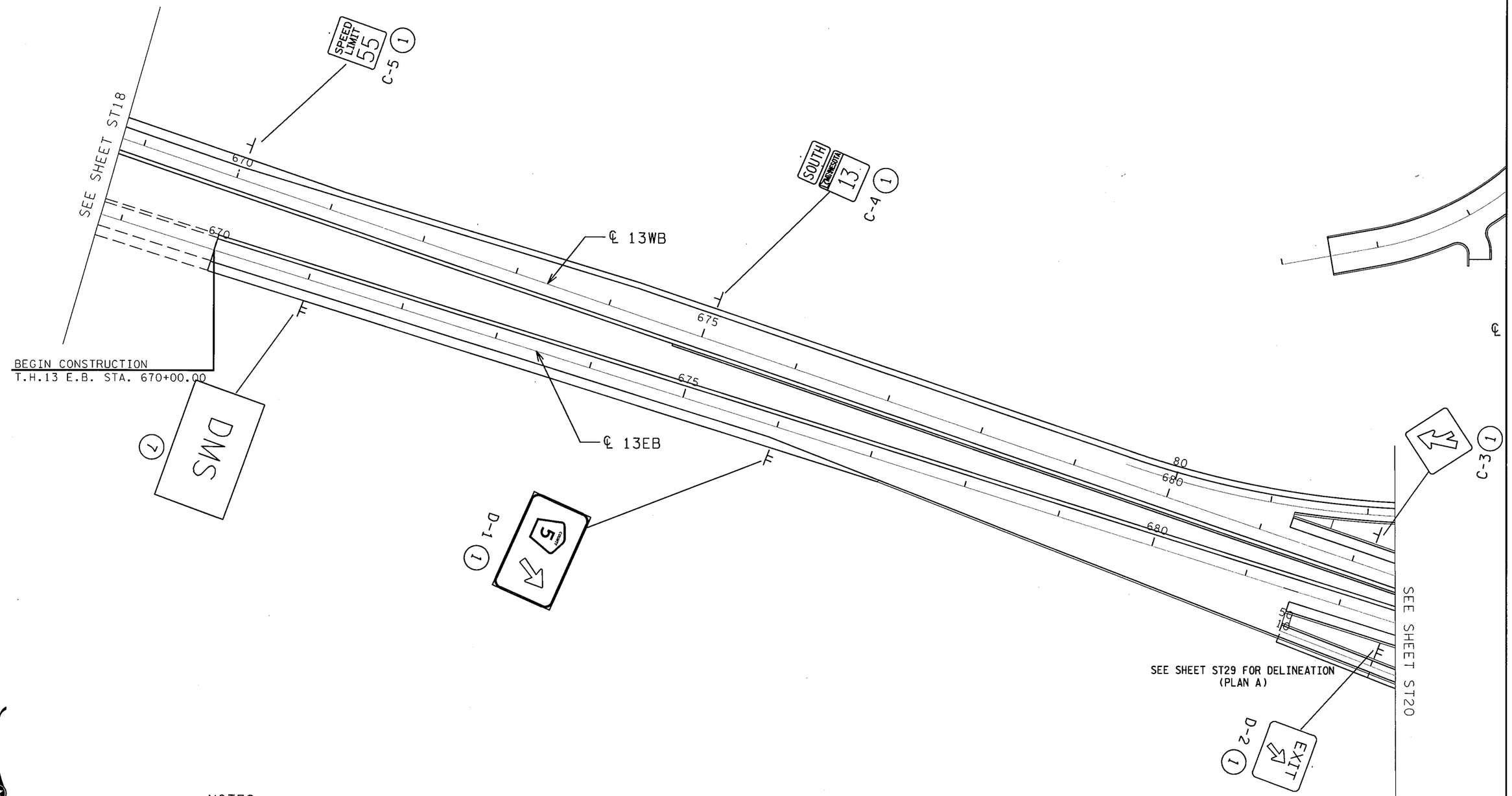

N

100'

SCALE IN FEET

NOTES:

1. F. & I.
2. INPLACE
7. SEE RTMC PLAN

S.P. 179-020-031 S.P. 019-605-028

SIGNING-PERMANENT

DRAWN BY: BB	CHECKED BY:	CERTIFIED BY Tiffany Kauth (LICENSED PROFESSIONAL ENGINEER) LIC. NO. 45918 DATE 6/11/2012	STATE PROJ. NO. 1901-148 (TH 13) SHEET NO. ST19 OF ST48 SHEETS

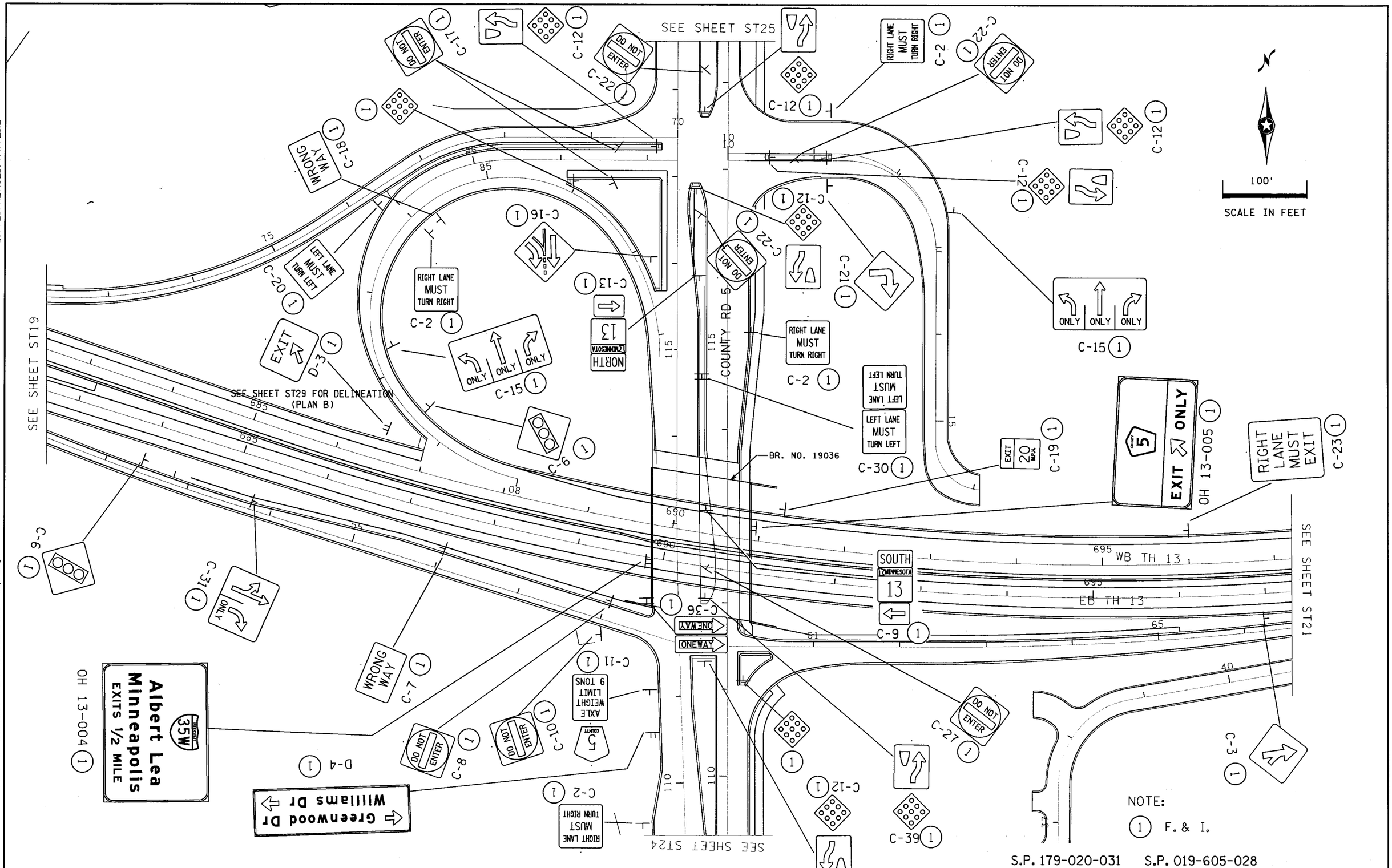

PLOTTED/REVISED: 7/17/2012

DISTRICT *: METRO
IPLOT NAME: t1901-148_ps2IO
PATH & FILENAME: \P_PWP:d1432276\1901-148_ps2.dgn

SIGNING-PERMANENT

DRAWN BY: BB	CHECKED BY:	CERTIFIED BY Tiffany Kraft LICENSED PROFESSIONAL ENGINEER LIC. NO. 45918 DATE 7/17/2012	STATE PROJ. NO. 1901-148 (TH 13) SHEET NO. ST20 OF ST48 SHEETS

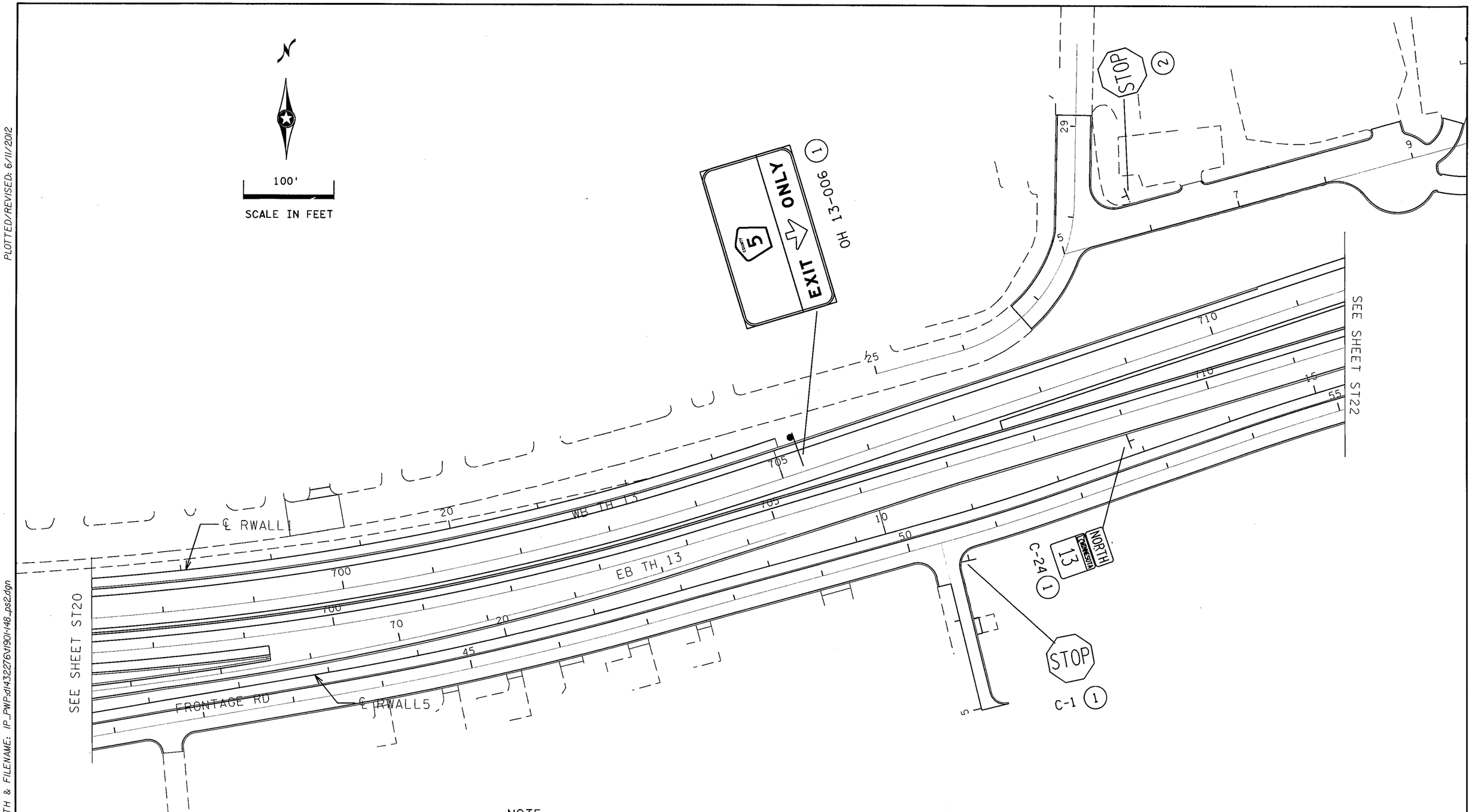

NOTE:

1. F. & I.
2. INPLACE

S.P. 179-020-031 S.P. 019-605-028

SIGNING-PERMANENT

DRAWN BY: BB	CHECKED BY:	CERTIFIED BY Tiffany Kauth (LICENSED PROFESSIONAL ENGINEER) LIC. NO. 45918 DATE 6/11/2012	STATE PROJ. NO. 1901-148 (TH 13) SHEET NO. ST21 OF ST48 SHEETS

PLOTTED/REVISED: 6/11/2012

DISTRICT #: METRO
IPLOT NAME: 1901-148_ps211
PATH & FILENAME: IP_PWF:d1432276V1901-148_ps2.dgn

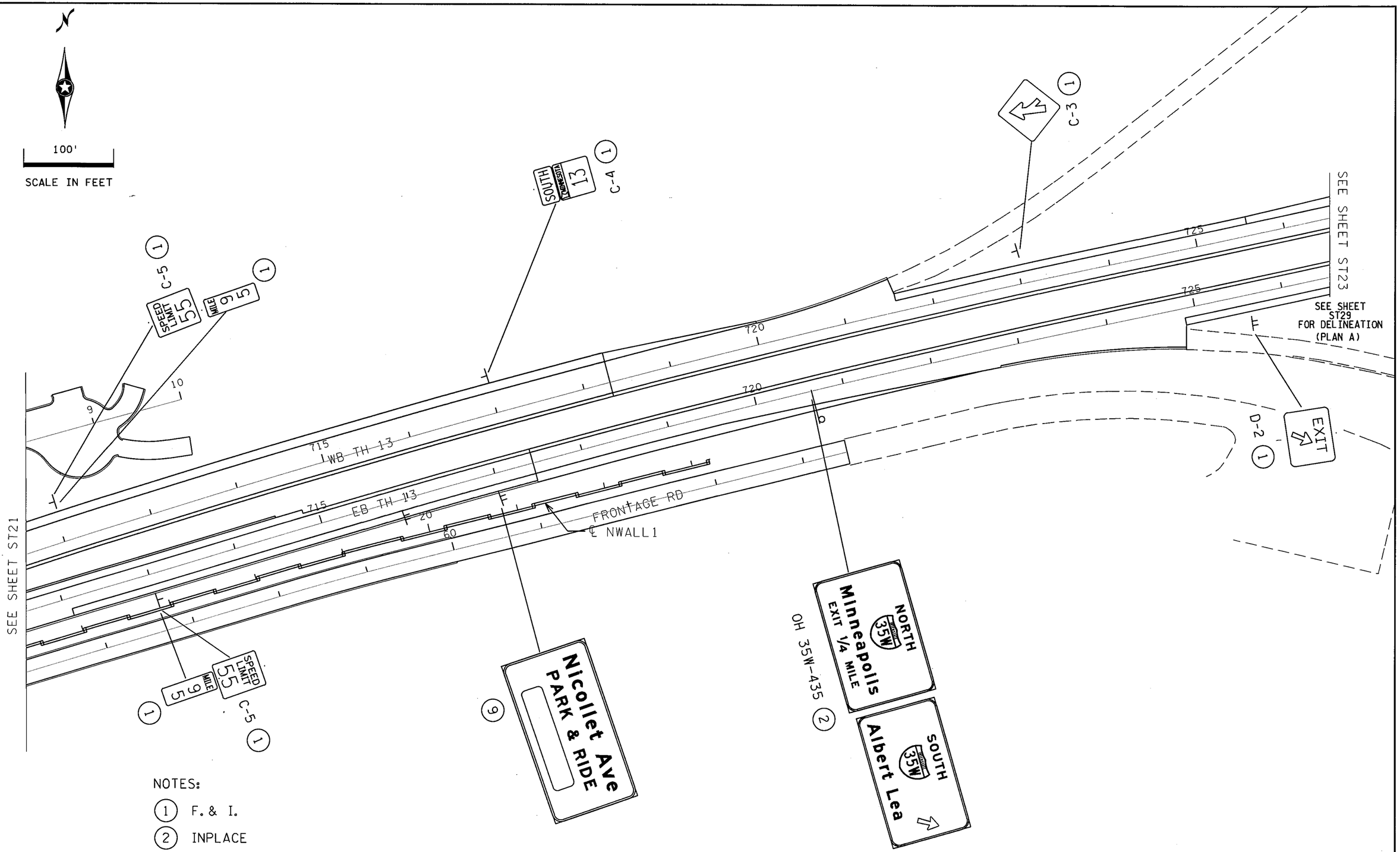

NOTES:

1. F. & I.
2. INPLACE
9. INSTALL BY OTHERS

S.P. 179-020-031 S.P. 019-605-028

SIGNING-PERMANENT

DRAWN BY: BB	CHECKED BY:	CERTIFIED BY Tiffany Kauth (LICENSED PROFESSIONAL ENGINEER) LIC. NO. 45918 DATE 7/17/2012	STATE PROJ. NO. 1901-148 (TH 13) SHEET NO. ST22 OF ST48 SHEETS

PLOTTED/REVISED: 7/17/2012

DISTRICT #: METRO
IPLOT NAME: 1190I-148_ps2l2
PATH & FILENAME: IP_PWP:d1432276V190I-148_ps2.dgn

PLOTTED/REVISED: 6/11/2012

DISTRICT #: METRO
IPLOT NAME: t1901-148_ps2l3
PATH & FILENAME: IP_PWP:d1432276\1901-148_ps2.dgn

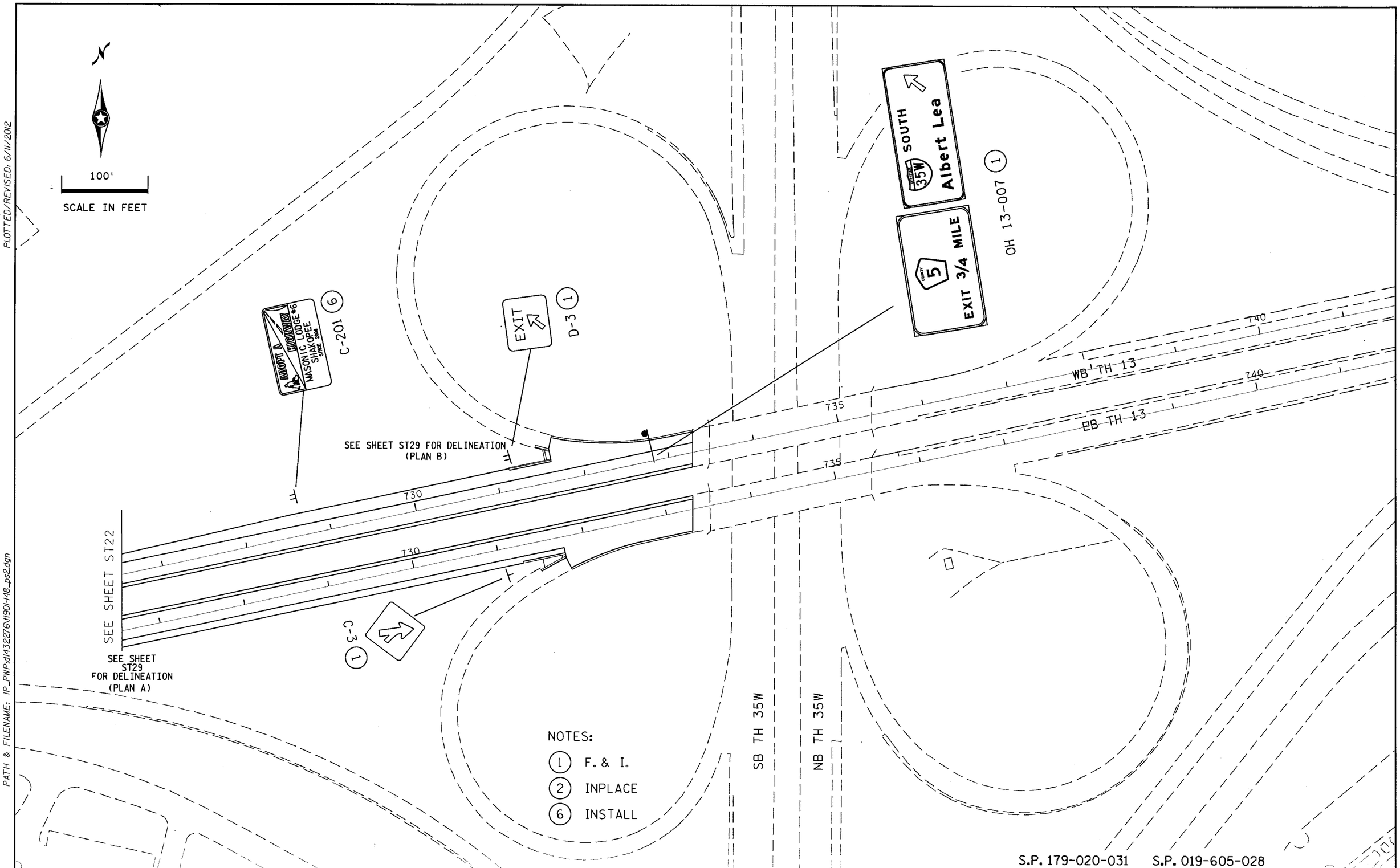

DRAWN BY: BB	CHECKED BY:	CERTIFIED BY Tiffany Kauth (LICENSED PROFESSIONAL ENGINEER) LIC. NO. 45918 DATE 6/11/2012	SIGNING-PERMANENT STATE PROJ. NO. 1901-148 (TH 13) SHEET NO. ST23 OF ST48 SHEETS

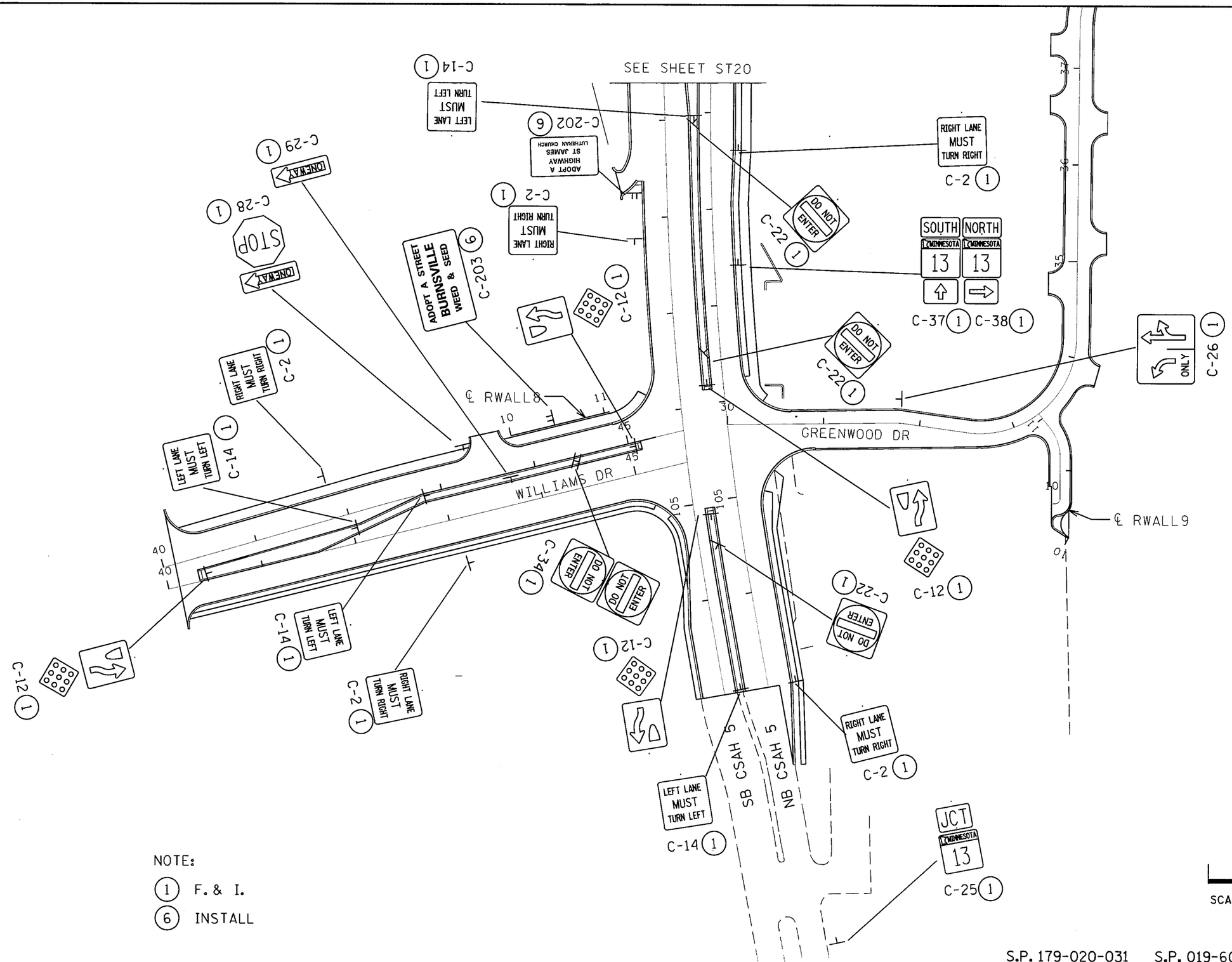

NOTE:

(1) F. & I.

(6) INSTALL

S.P. 179-020-031 S.P. 019-605-028

SIGNING-PERMANENT

DRAWN BY: BB	CHECKED BY:	CERTIFIED BY Tiffany Kauth (LICENSED PROFESSIONAL ENGINEER) LIC. NO. 45918 DATE 6/11/2012	STATE PROJ. NO. 1901-148 (TH 13) SHEET NO. ST24 OF ST48 SHEETS

PLOTTED/REVISED: 6/11/2012

DISTRICT #: METRO
IPLOT NAME: 1190I-148_ps214
PATH & FILENAME: IP_PWP-d1432276\1190I-148_ps2.dgn

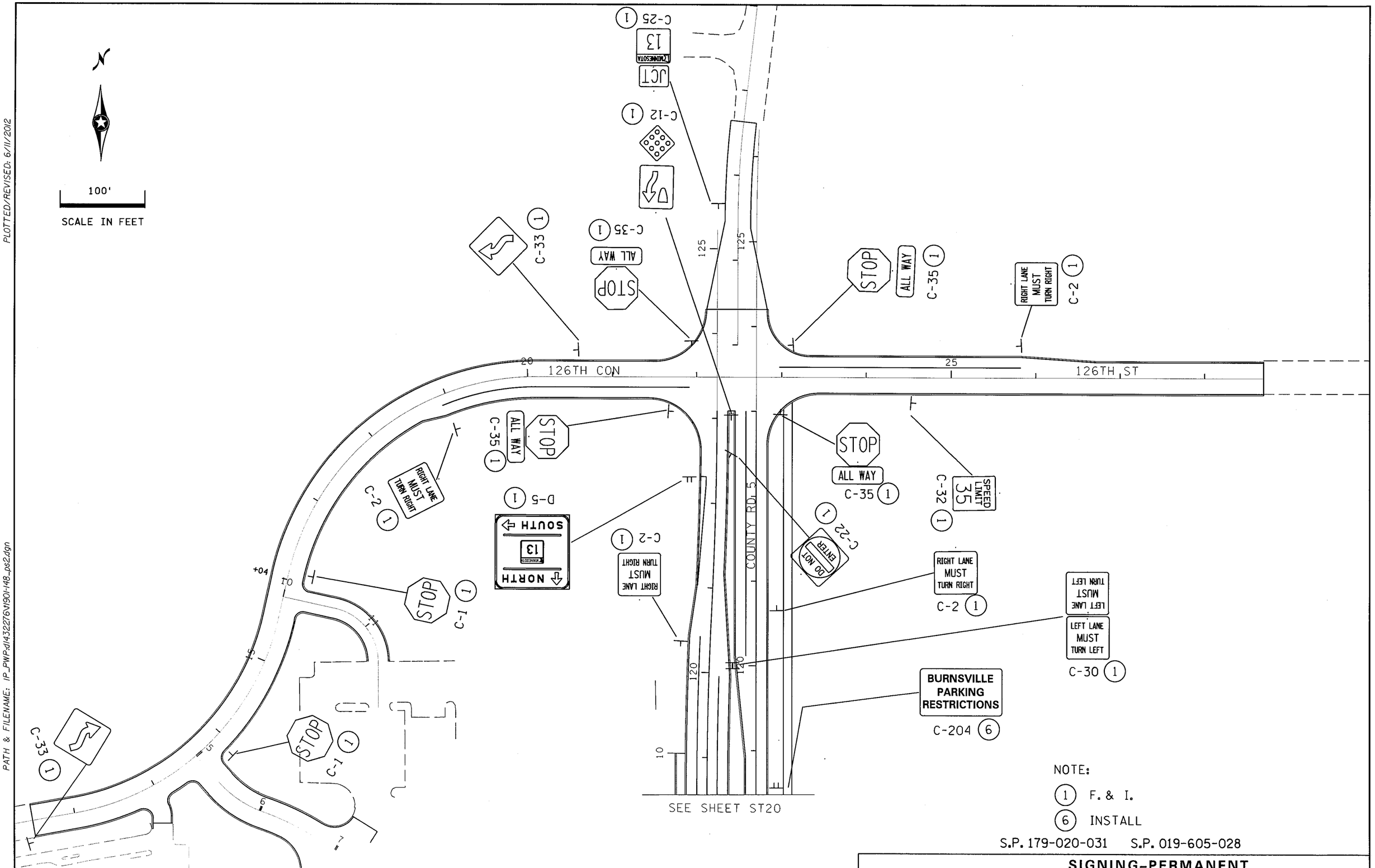

NOTE:

(1) F. & I.

(6) INSTALL

S.P. 179-020-031 S.P. 019-605-028

DRAWN BY: BB	CHECKED BY:	CERTIFIED BY Tiffany Kauth (LICENSED PROFESSIONAL ENGINEER)	LIC. NO. 45918	DATE 6/11/2012	SIGNING-PERMANENT STATE PROJ. NO. 1901-148 (TH 13) SHEET NO. ST25 OF ST48 SHEETS

PLOTTED/REVISED: 6/11/2012

DISTRICT #: METRO
IPLOT NAME: t1901-148_ps2l5
PATH & FILENAME: 1P_PWP-d1432276\1901-148_ps2.dgn

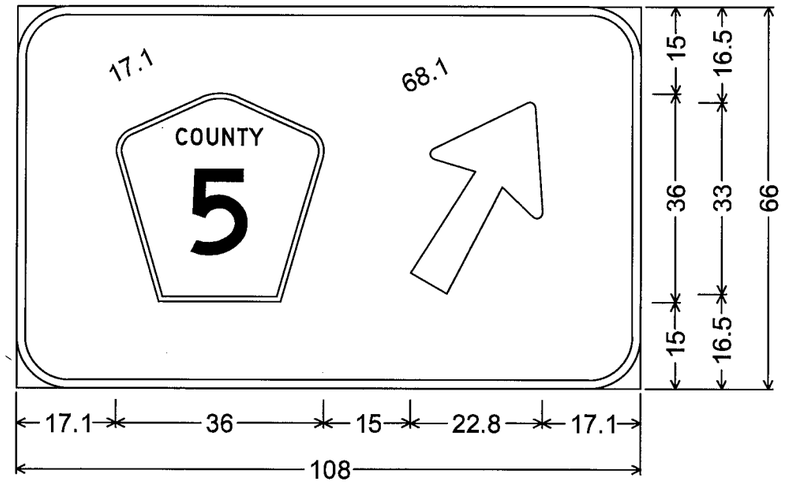

D-1; 9.0" Radius, 1.5" Border, White on Green;
Arrow 17 - 36.0" 60°;

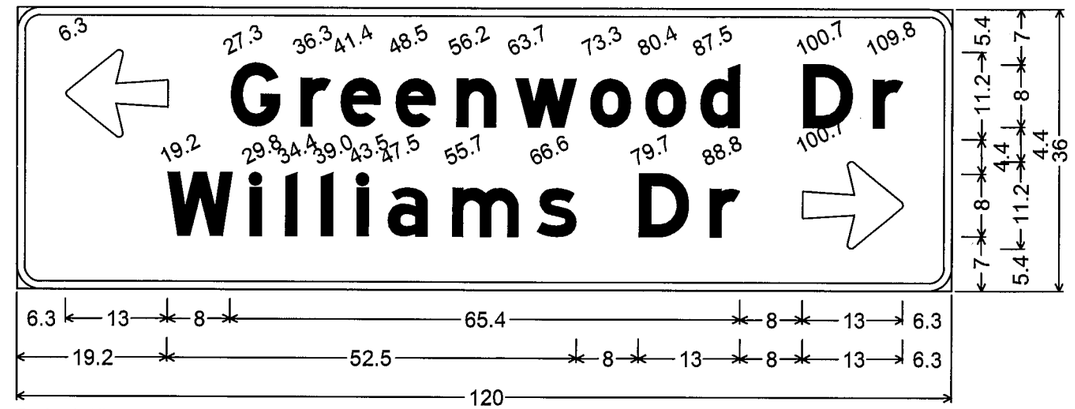

D-4; 3.0" Radius, 1.0" Border, White on Green;
Arrow 5 - 13.0" 180°; [Greenwood Dr] E Mod; [Williams Dr] E Mod;
Arrow 5 - 13.0" 0°;

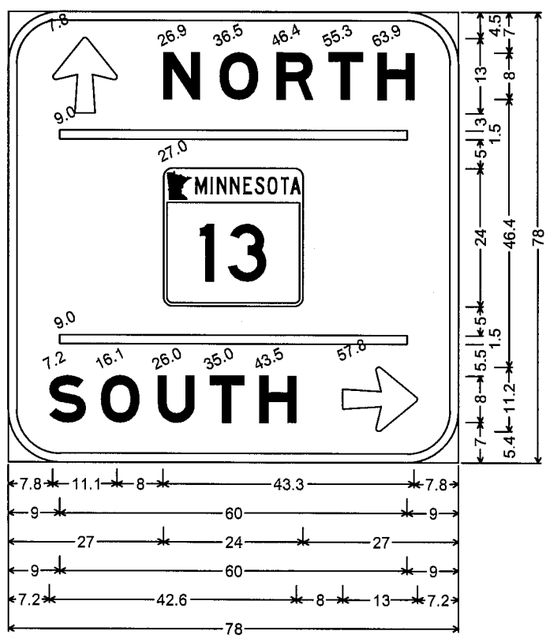

D-5; 9.0" Radius, 1.5" Border, White on Green;
Arrow 5 - 13.0" 90°; [NORTH] E Mod 125% spacing;
[SOUTH] E Mod 125% spacing; Arrow 5 - 13.0" 0°;

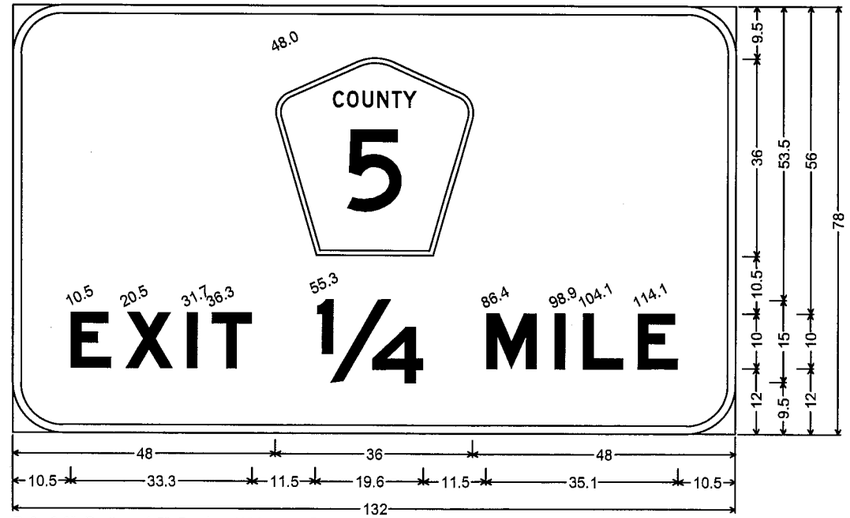

D-6; 9.0" Radius, 1.5" Border, White on Green;
[EXIT ¼ MILE] E Mod;

NOTE:
1. SEE STANDARD SIGNS MANUAL FOR ARROW, FRACTION AND OVERLAY DETAIL.

S.P. 179-020-031 S.P. 019-605-028

SIGNING-PANEL LAYOUTS

DRAWN BY: BB	CHECKED BY:	CERTIFIED BY Tiffany Kauth (LICENSED PROFESSIONAL ENGINEER) LIC. NO. 45918 DATE 7/17/2012	STATE PROJ. NO. 1901-148 (TH 13) SHEET NO. ST26 OF ST48 SHEETS

PLOTTED/REVISED: 7/17/2012
DISTRICT #: METRO
IPLOT NAME: T1901-148_PANELS1
PATH & FILENAME: IP_PWP-d1432276\T1901-148_PANELS.dgn

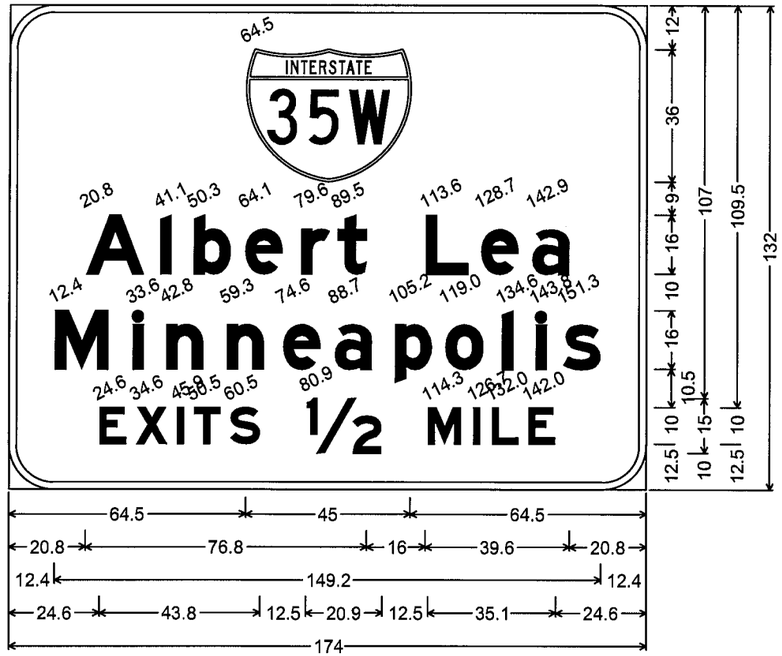

OH 13-004; 12.0" Radius, 2.0" Border, White on Green;
[Albert Lea] E Mod; [Minneapolis] E Mod; [EXITS] E Mod;
[½ MILE] E Mod;

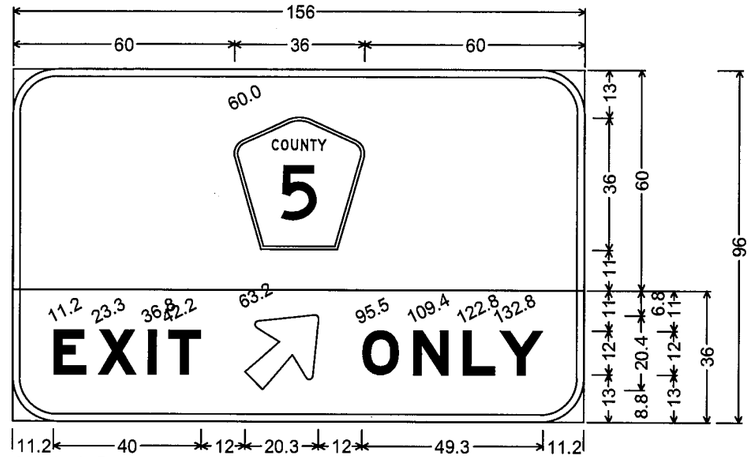

OH 13-005;
12.0" Radius, 2.0" Border, White on Green;
12.0" Radius, 2.0" Border, Black on Yellow;
[EXIT] E Mod; Arrow 8 - 25.0" 45°; [ONLY] E Mod;

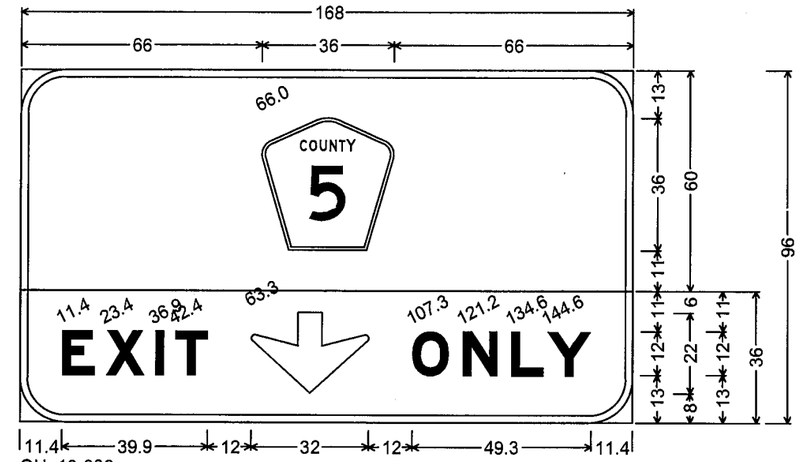

OH 13-006;
12.0" Radius, 2.0" Border, White on Green;
12.0" Radius, 2.0" Border, Black on Yellow;
[EXIT] E Mod; Down Arrow 22.0" 270°; [ONLY] E Mod;

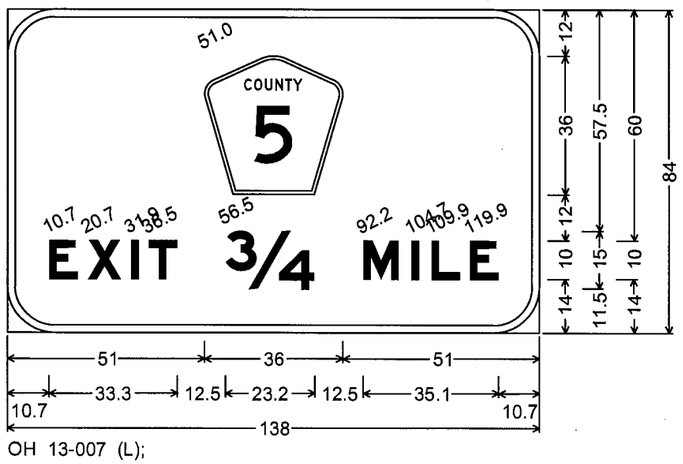

OH 13-007 (L);
12.0" Radius, 2.0" Border, White on Green;
[EXIT ¾ MILE] E Mod;

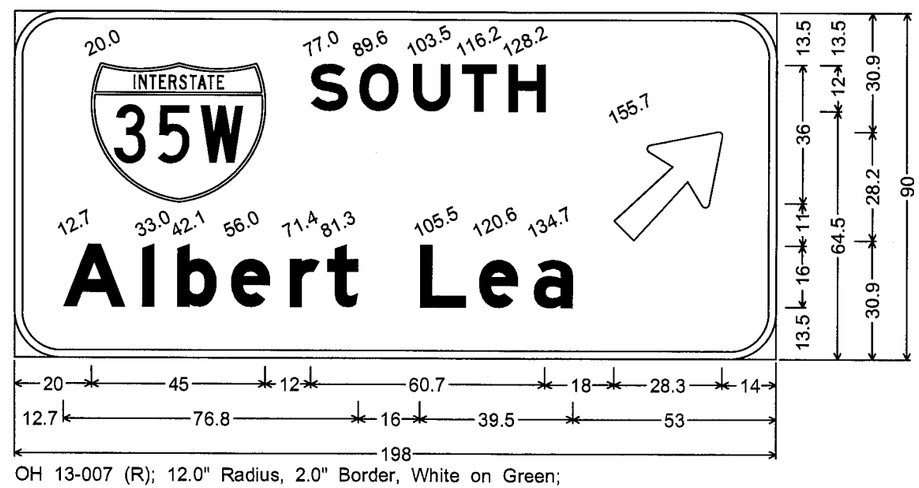

OH 13-007 (R); 12.0" Radius, 2.0" Border, White on Green;
[SOUTH] E Mod; [Albert Lea] E Mod; Arrow 17 - 36.0" 45°;

NOTES:
1. CORNERS OF SIGN PANELS EXTENDING BEYOND BORDER SHALL NOT BE TRIMMED.
2. SEE STANDARD SIGNS MANUAL FOR ARROW, FRACTION AND OVERLAY DETAIL.

S.P. 179-020-031 S.P. 019-605-028

SIGNING-PANEL LAYOUTS

DRAWN BY: BB	CHECKED BY:	CERTIFIED BY Tiffany Kauth (LICENSED PROFESSIONAL ENGINEER) LIC. NO. 45918 DATE 6/11/2012	STATE PROJ. NO. 1901-148 (TH 13) SHEET NO. ST27 OF ST48 SHEETS

PLOTTED/REVISED: 6/11/2012
DISTRICT *: METRO
IPLOT NAME: TI901-148_PANELS2
PATH & FILENAME: IP_PWP:d1432276\TI901-148_PANELS.dgn

GORE PLACEMENT

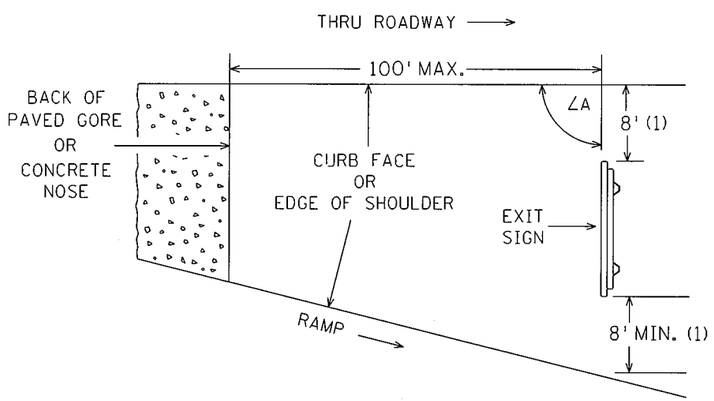

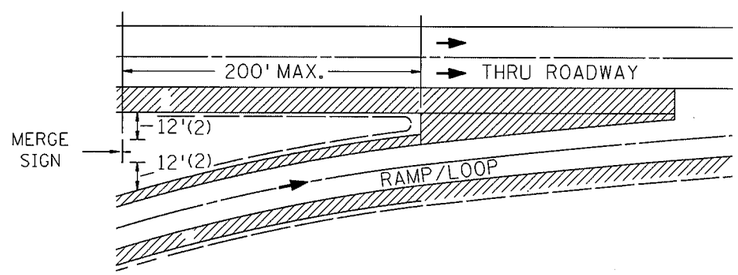

ROADSIDE PLACEMENT

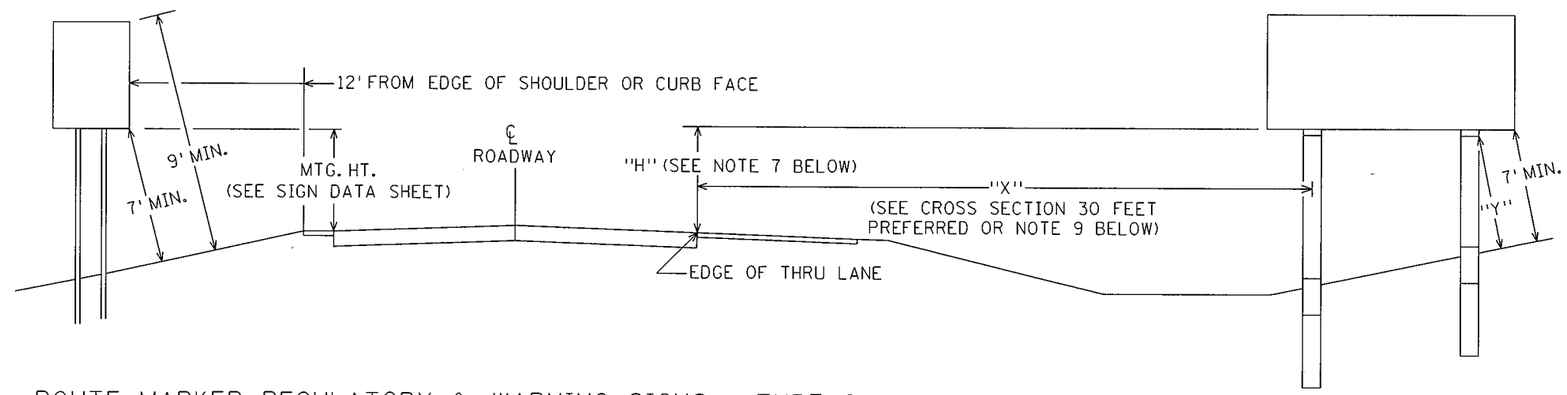

ROUTE MARKER, REGULATORY & WARNING SIGNS - TYPE C
MINOR GUIDE SIGNS - TYPE D

MAJOR GUIDE SIGN - TYPE A

SPECIFIC NOTES:

(1) EXIT SIGNS
IF THESE OFFSETS CANNOT BE ATTAINED WITHIN 100 FEET OF THE PAVED GORE, A 4 FOOT OFFSET IS ACCEPTABLE. IF THE 4 FOOT OFFSETS CANNOT BE ATTAINED WITHIN 100 FEET OF THE PAVED GORE, CONTACT THE PROJECT ENGINEER WHO WILL CONSULT WITH THE STATE SIGNING ENGINEER.

(2) MERGE SIGNS
IF THESE OFFSETS CANNOT BE ATTAINED WITHIN 200 FEET OF THE PAVED GORE, A 4 FOOT OFFSET IS ACCEPTABLE. IF THE 4 FOOT OFFSETS CANNOT BE ATTAINED WITHIN 200 FEET OF THE PAVED GORE, CONTACT THE PROJECT ENGINEER WHO WILL CONSULT WITH THE STATE SIGNING ENGINEER.

NOTES:

1. IF A SECONDARY SIGN IS MOUNTED BELOW A MAJOR SIGN, THE MAJOR SIGN SHALL BE AT LEAST 8' ABOVE THE THRU LANE EDGE AND THE SECONDARY SIGN AT LEAST 5'.
2. ALL ROUTE MARKERS, WARNING AND REGULATORY SIGNS SHALL BE AT LEAST 7' ABOVE THRU LANE EDGE.
3. SIGN FACES SHALL BE VERTICAL.
4. OVERHEAD SIGNS SHALL BE POSITIONED AT RIGHT ANGLES TO THE THRU ROADWAY UNLESS OTHERWISE NOTED.
5. TO AVOID SPECULAR GLARE, ∠A SHALL BE APPROXIMATELY 93° FOR SIGNS LOCATED LESS THAN 30' FROM THE EDGE OF THRU LANE AND APPROXIMATELY 92° FOR SIGNS LOCATED 30' OR MORE FROM EDGE OF THRU LANE. THIS APPLIES TO SIGNS TYPE A, C, & D AND INCLUDES SIGNS IN THE GORE.
6. "Y" IS THE PERPENDICULAR DISTANCE FROM THE GROUND LINE TO THE FRICTION FUSE ON THE POST. THIS DISTANCE SHALL BE AT LEAST 7'.
7. WHERE "X" IS LESS THAN 30', "H" SHALL BE 7' ±6". WHERE "X" IS 30' OR GREATER, MINIMUM AND PREFERRED "H" IS 5'.
8. LATERAL CLEARANCES GIVEN APPLY TO RIGHT AND OR LEFT SIDE INSTALLATION.
9. WHEN A TYPE A SIGN IS INSTALLED DIRECTLY BEHIND TRAFFIC BARRIER, THE LEFT EDGE OF THE SIGN PANEL SHALL BE LOCATED A MINIMUM OF 8 FEET BEHIND THE FACE OF THE TRAFFIC BARRIER.

SIGN PLACEMENT

REVISED: 1-28-11
PLOTTED/REVISED: 6/11/2012
DISTRICT *: METRO
IPLOT NAME: _ST28
PATH & FILENAME: \P_PWP-d1432276\J901-148_ SIGNING TYPICALS.dgn

PLOTTED/REVISED: 6/11/2012

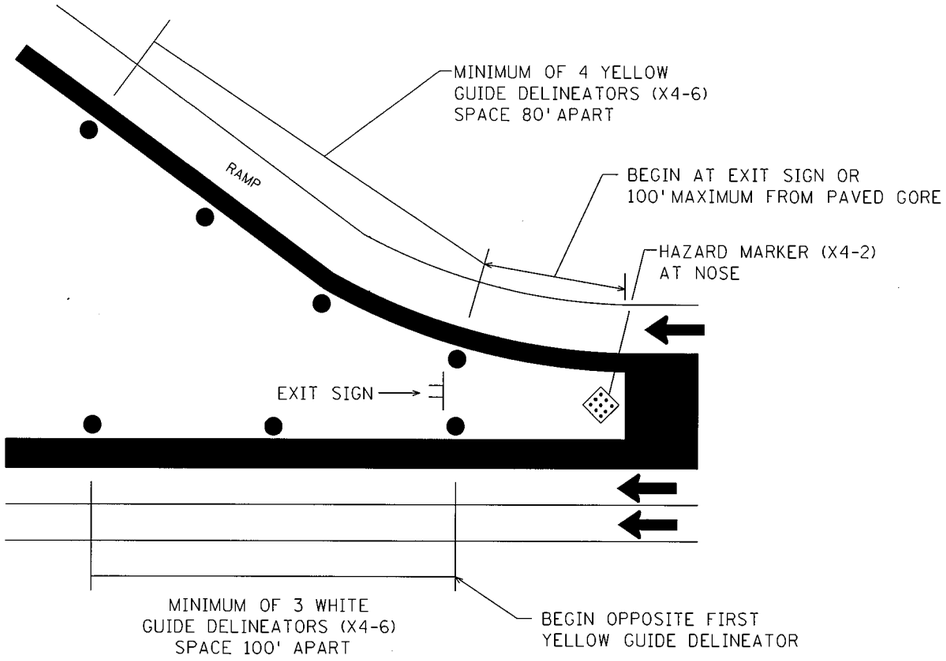

PLAN A
RAMP DELINEATION

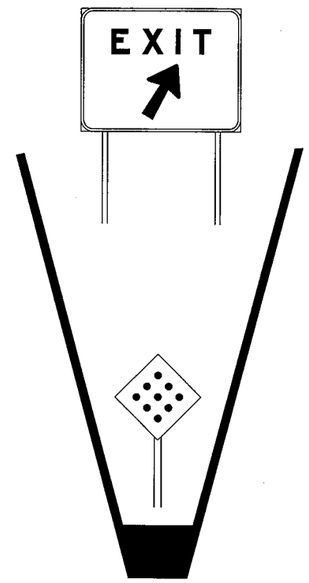

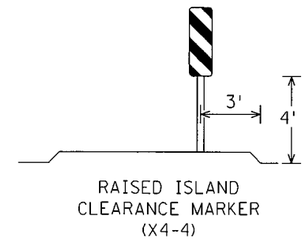

RAISED ISLAND
CLEARANCE MARKER
(X4-4)

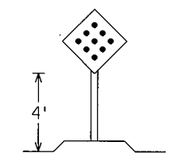

RAISED ISLAND
HAZARD MARKER
(X4-2)

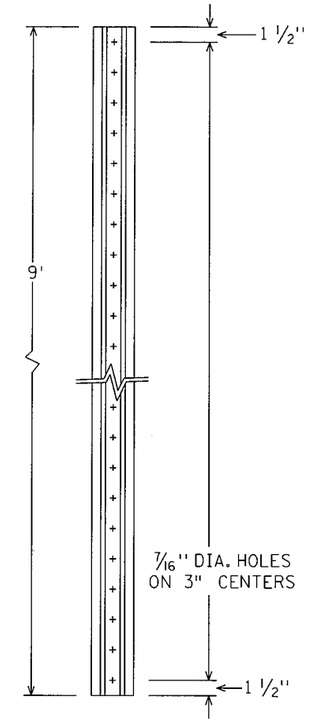

MNDOT 3401
NORMAL WEIGHT= 2 LB./FT.

DELINEATOR POST

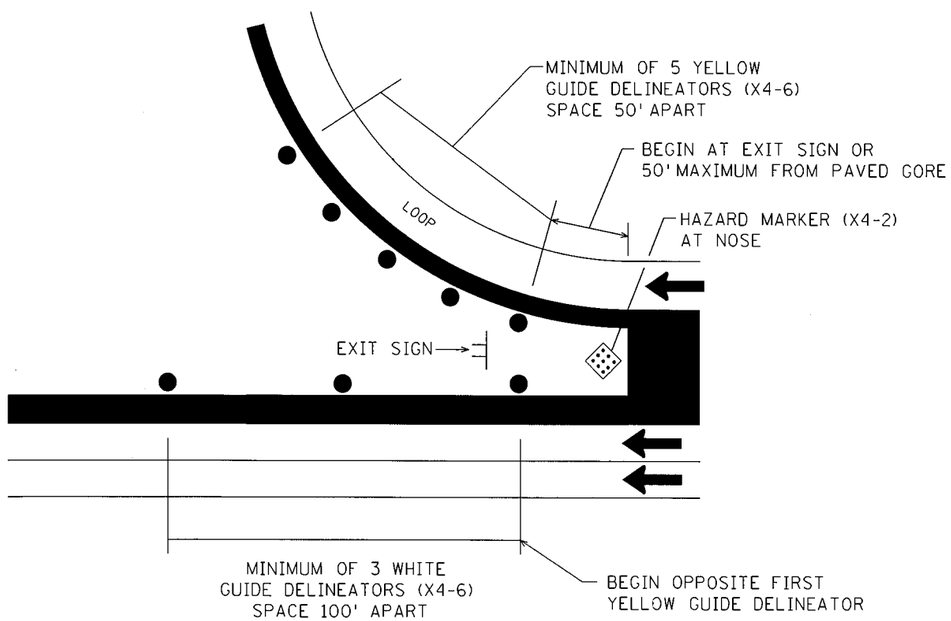

PLAN B
LOOP DELINEATION

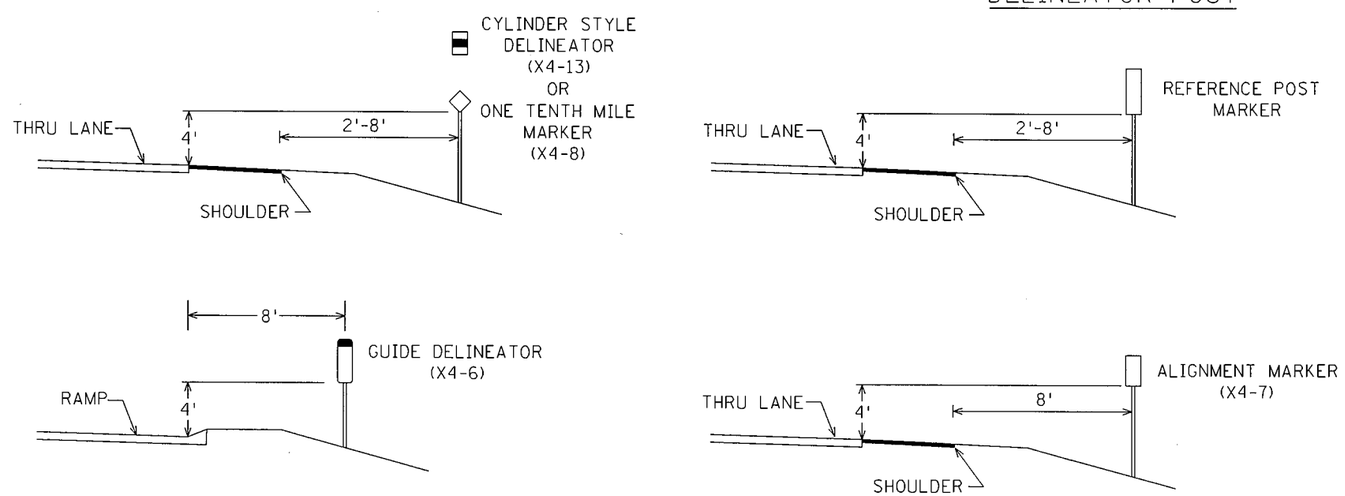

TYPICAL PLACEMENT

DELINEATORS AND MARKERS

S.P.179-020-031 S.P.019-605-028

DISTRICT #: METRO
IPLOT NAME: _ST29
PATH & FILENAME: IP_PWP-d1432276_J901-148_ SIGNING TYPICALS.dgn

REVISED: 1-21-09

TYPE C & D POST

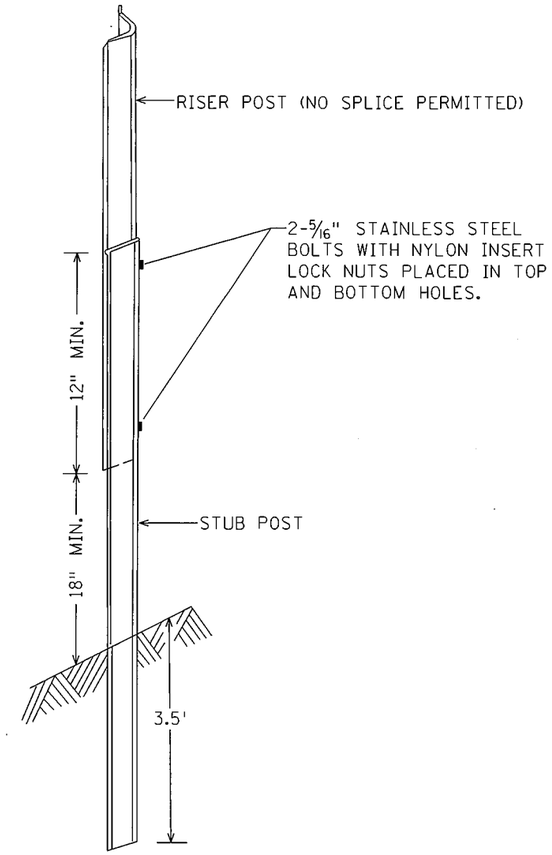

U POST SPLICE

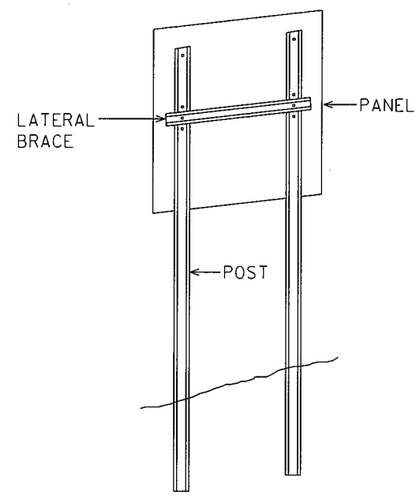

TYPICAL TYPE C INSTALLATION

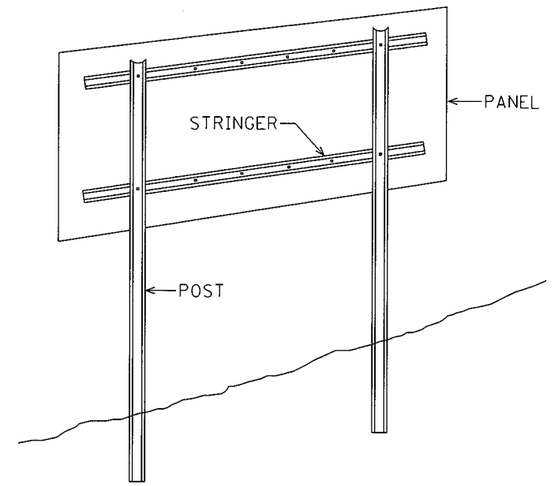

TYPICAL TYPE D INSTALLATION

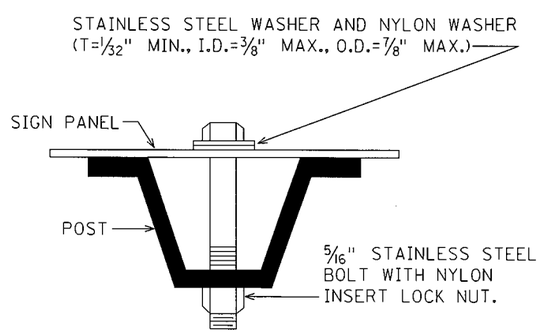

U POST MOUNTING
TYPE C SIGNS

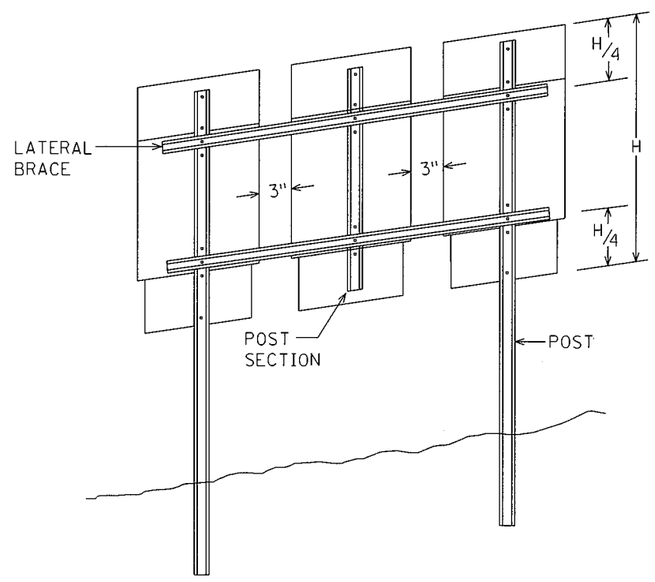

MODIFIED TYPE C INSTALLATION

NOTES:

1. USE 3 LB/FT STUB POSTS, RISER POSTS, STRINGERS, KNEE BRACES, LATERAL BRACES AND KNEE BRACE STUB POSTS. ALL SHALL CONFORM TO MNDOT 3401.
2. FOR TYPE D SIGN POSTS LENGTHS AND SPACINGS, SEE SIGN DATA SHEET.
3. TYPE D SIGN PANELS SHALL BE BOLTED TO STRINGERS AT 24" MAXIMUM INTERVALS IN ACCORDANCE WITH THE TYPE D STRINGER AND PANEL-JOINT DETAIL (SEE STANDARD SIGNS MANUAL).
4. MOUNTING (PUNCH CODE) FOR TYPE C SIGN PANELS SHALL BE AS INDICATED IN THE STANDARD SIGNS MANUAL UNLESS OTHERWISE SPECIFIED.
5. ALL RISER (VERTICAL) U POSTS SHALL BE SPLICED. DRIVEN STUB POSTS SHALL BE AT LEAST 7' LONG.
6. USE STAINLESS STEEL 5/16" BOLTS, WASHERS AND NYLON INSERT LOCK NUTS AS SHOWN FOR ALL GROUND MOUNTED AND OVERHEAD MOUNTED SIGNS.
7. STAINLESS STEEL WASHER WITH SAME DIMENSIONS SHALL BE PROVIDED BETWEEN ALL NYLON WASHERS AND BOLT HEADS.
8. BRACING STUBS SHALL BE NO MORE THAN 4" ABOVE GROUND AND EMBEDDED AT LEAST 3½'.
9. A-FRAME BRACKET SHALL BE STEEL CONFORMING TO MNDOT 3306 AND GALVANIZED IN ACCORDANCE WITH MNDOT 3394.
10. COLLARS SHALL BE USED TO SHIM OVERLAYS AND DEMOUNTABLE LEGEND AWAY FROM PANEL WHERE INTERFERENCE WITH BOLT HEADS IS ENCOUNTERED. MNDOT 3352.2A5.
11. 2 POST TYPE C SIGNS SHALL BE REINFORCED WITH AT LEAST ONE LATERAL BRACE. INSTALLATIONS WHERE THE TOTAL PANEL HEIGHT IS 60" OR MORE SHALL HAVE TWO LATERAL BRACES LOCATED APPROXIMATELY AT THE QUARTER POINTS.
12. WHERE 2 SINGLE POST TYPE C SIGNS ARE INSTALLED SIDE BY SIDE, THEY SHALL BE REINFORCED LATERALLY BY AT LEAST 2 BRACES, BOLTED AT EACH POST AND LOCATED APPROXIMATELY AT THE QUARTER POINTS.
13. WHERE 3 OR MORE TYPE C SIGNS ARE INSTALLED SIDE BY SIDE, THEY SHALL BE REINFORCED LATERALLY BY AT LEAST 2 BRACES, BOLTED AT EACH POST AND POST SECTION AND LOCATED APPROXIMATELY AT THE QUARTER POINTS AS SHOWN IN MODIFIED TYPE C INSTALLATION.

TYPE C & D SIGN
STRUCTURAL DETAILS

S.P.179-020-031 S.P.019-605-028 Sheet 1 of 3

REVISED: 12-6-11

STATE PROJ. NO. 1901-148 (TH 13) SHEET NO. ST30 OF ST48 SHEETS

PLOTTED/REVISED: 6/11/2012
DISTRICT *: METRO
IPLOT NAME: _ST30
PATH & FILENAME: IP_PWP:d1432276V_1901-148_ SIGNING TYPICALS.dgn

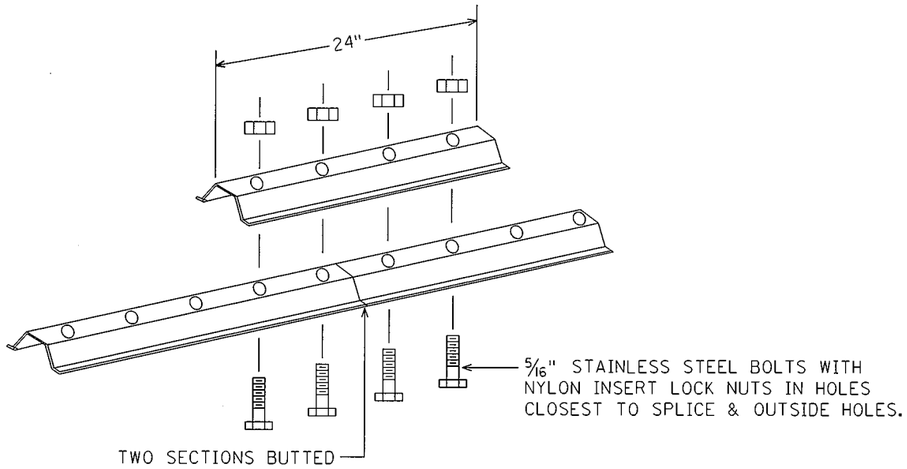

LATERAL BRACE OR STRINGER SPLICE DETAIL (EXPLODED VIEW)

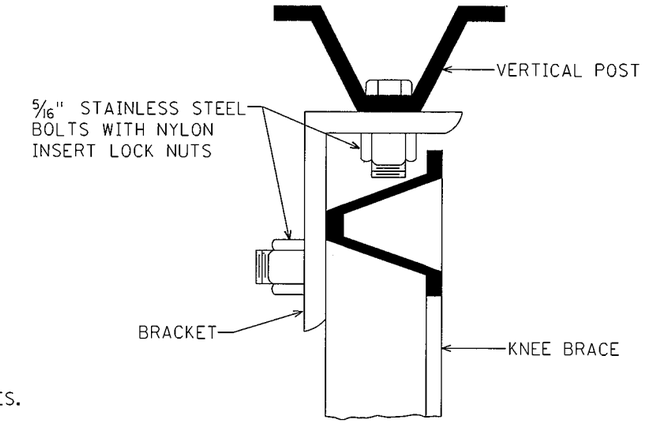

SECTION A-A

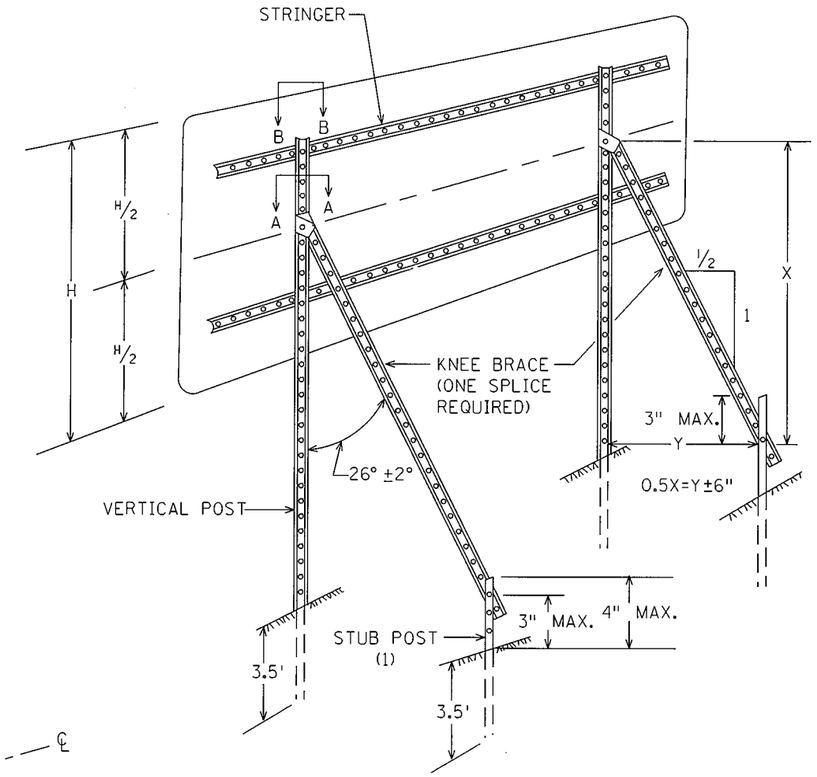

TYPICAL "A-FRAME" INSTALLATION TYPE "D" SIGNS

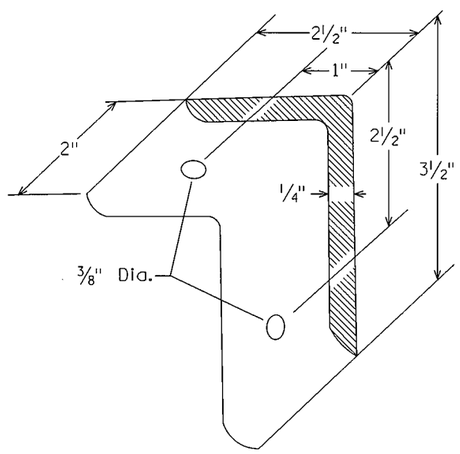

A-FRAME BRACKET

(STEEL MN/DOT 3306 GALVANIZED PER MN/DOT 3394)

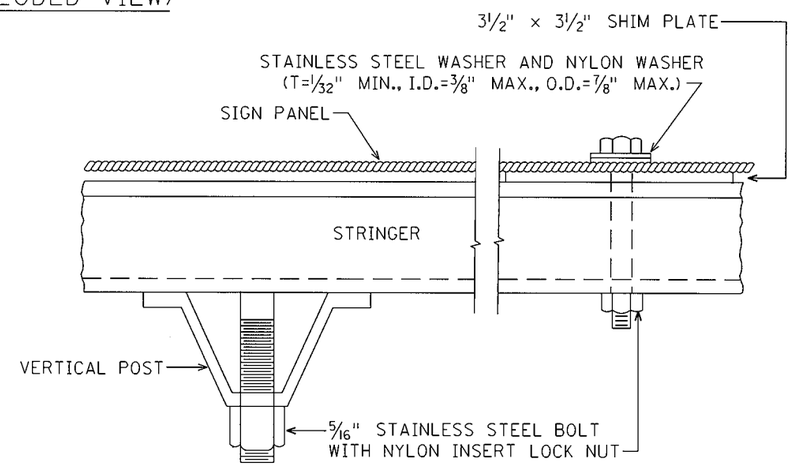

SECTION B-B

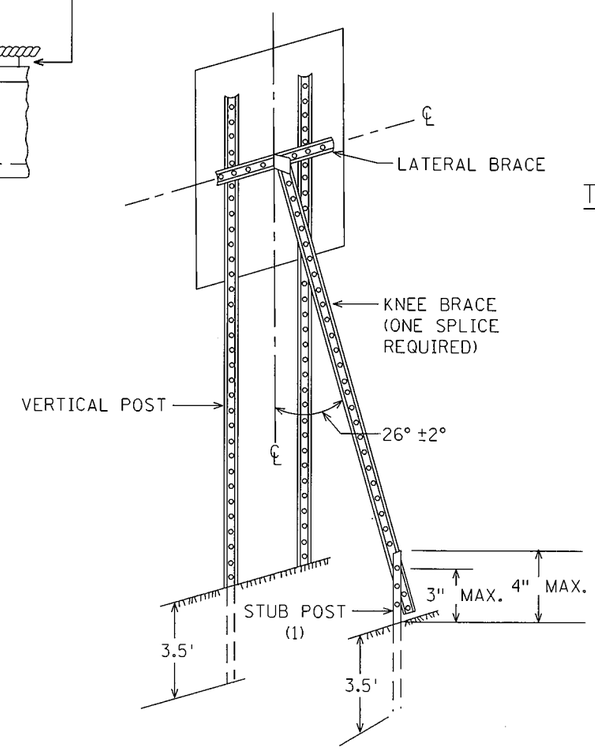

TYPICAL "A-FRAME" INSTALLATION TYPE "C" SIGNS

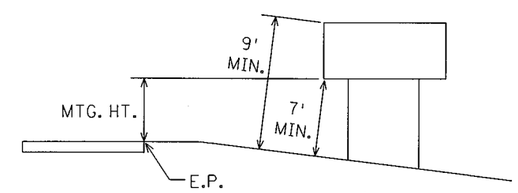

TYPICAL MOUNTING

(1) OFFSET STUB POST 1' TOWARD ROADWAY RELATIVE TO VERTICAL POST. ATTACH STUB POST AND KNEE BRACE BACK TO BACK.

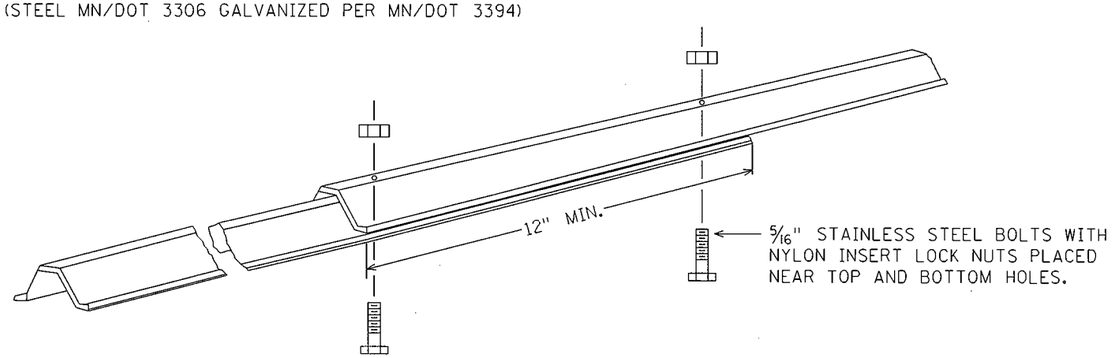

KNEE BRACE SPLICE

TYPE C & D SIGN STRUCTURAL DETAILS

Sheet 2 of 3

S.P.179-020-031 S.P.019-605-028

REVISED: 1-7-08

STATE PROJ. NO. 1901-148 (TH 13) SHEET NO. ST31 OF ST48 SHEETS

PLOTTED/REVISED: 6/11/2012
DISTRICT *: METRO
IPLOT NAME: _ST31
PATH & FILENAME: IP_PWP:d1432276v_1901-148_ SIGNING TYPICALS.dgn

PLOTTED/REVISED: 6/11/2012

DISTRICT #: METRO
IPLOT NAME: _ST32
PATH & FILENAME: IP_PWF:d1432276V_J901-148_ SIGNING TYPICALS.dgn

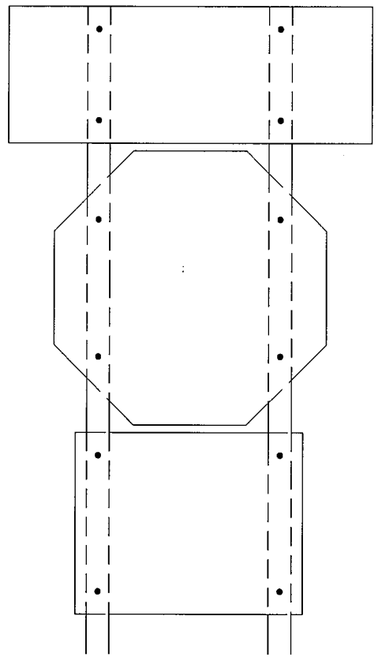

R6-1, R1-1 & (R6-3 OR R6-3a)
MOUNTING

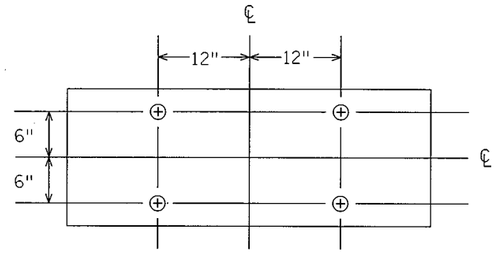

PUNCHING FOR R6-1(48"×18")

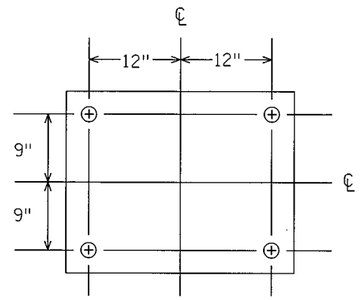

PUNCHING FOR R6-3 OR R6-3a(30"×24")

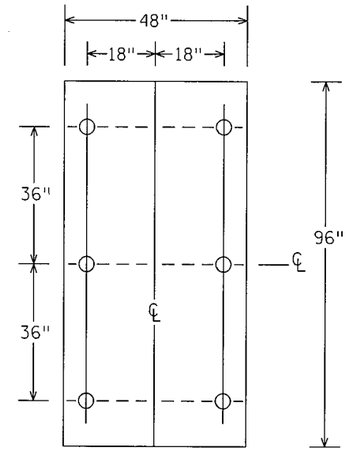

PUNCHING FOR R2-4b
SPEED LIMIT

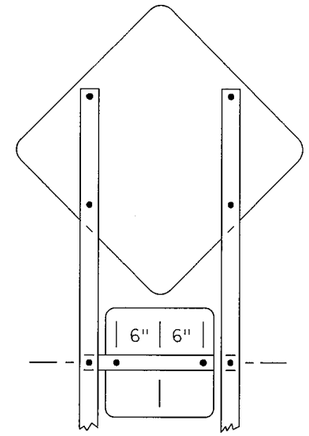

(W1-1, W1-2, W1-3, W1-4 OR W1-5) & W13-1
MOUNTING

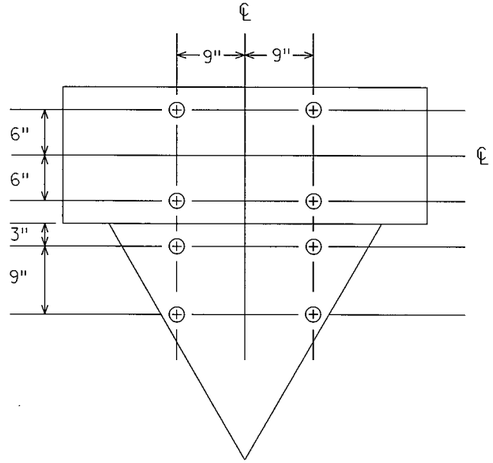

PUNCHING FOR R6-1(48"×18")
& R1-2(36"×36"×36")

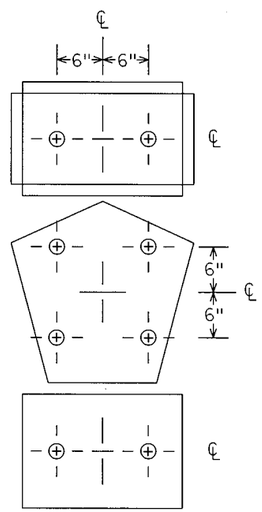

M2-1A [21"×15"] OR
(M3-1A, M3-2A, M3-3A OR M3-4A) [24"×12"] AND
M1-6 [24"×24"] AND
(M5-1A, M5-2A, M6-1A, M6-2A, M6-3A M6-4A, M6-5A OR M6-6A) [21"×15"]
PUNCHING

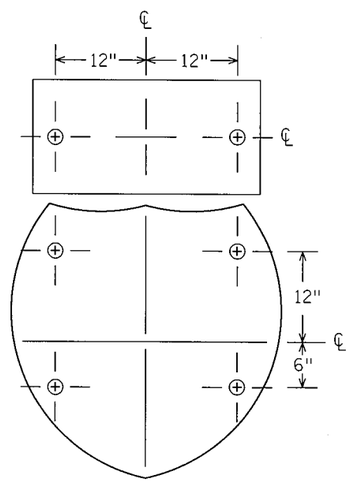

(M3-1A, M3-2A, M3-3A OR M3-4A) [30"×15"] AND
M1-1 [45"×36" OR 36"×36"]
PUNCHING

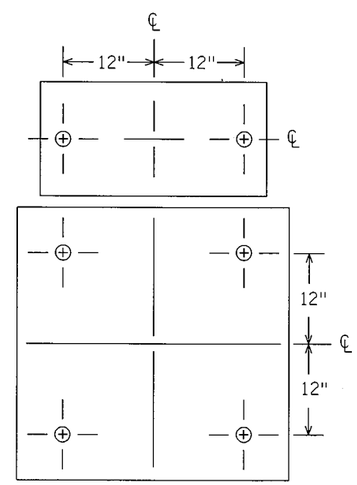

(M3-1, M3-1A, M3-2, M3-2A, M3-3, M3-3A M3-4 OR
M3-4A) [30"×15"] AND (M1-4 OR M1-5A) [36"×36"]
PUNCHING

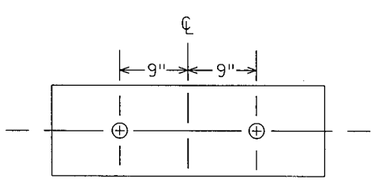

PUNCHING FOR R6-1(36"×12")

TYPE C & D SIGN

STRUCTURAL DETAILS

Sheet 3 of 3

S.P.179-020-031 S.P.019-605-028

REVISED: 10-28-08

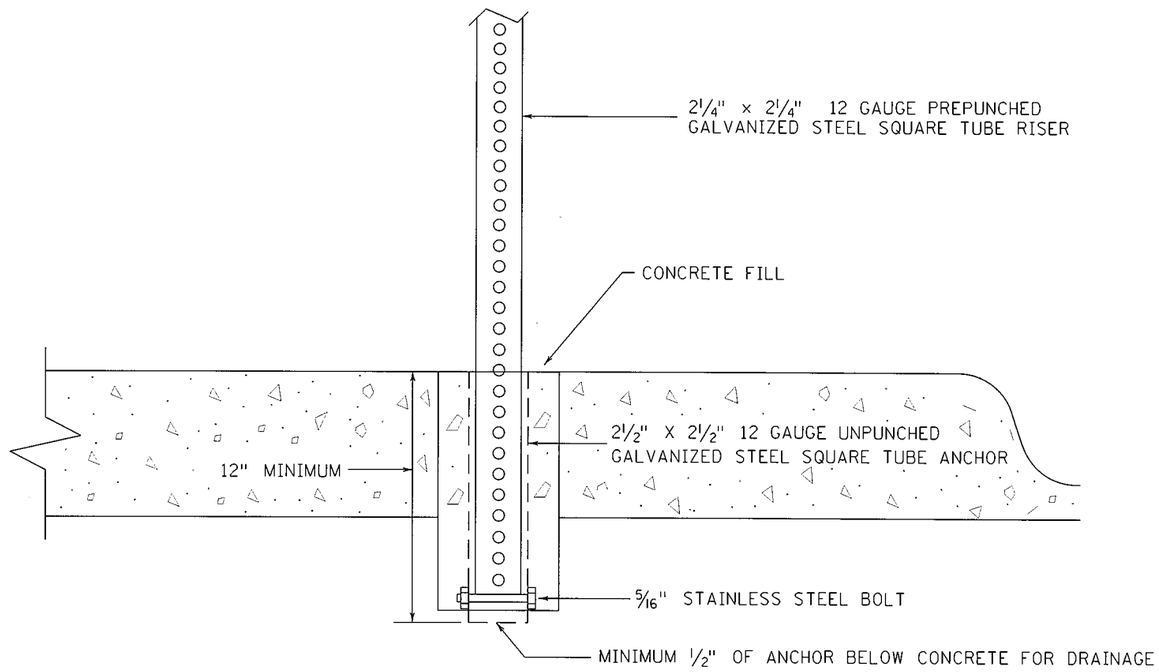

NOTES;

1. DRILL AN 8" DIAMETER HOLE THE FULL DEPTH OF THE ANCHOR.
2. DRILL ⅜" HOLES ON OPPOSITE SIDES OF THE UNPUNCHED GALVANIZED STEEL SQUARE TUBE ANCHOR APPROX. 1" FROM THE BOTTOM OF THE ANCHOR. INSERT A 5/16" STAINLESS STEEL BOLT THROUGH THE HOLES AND SECURE WITH A STAINLESS STEEL LOCK NUT WITH NYLON INSERT. THE PREPUNCHED GALVANIZED STEEL SQUARE TUBE RISER (TO BE INSERTED INSIDE THE UNPUNCHED GALVANIZED SQUARE TUBE ANCHOR) WILL REST ON BOLT.
3. INSERT THE ANCHOR IN THE HOLE.
4. AFTER INSTALLATION OF THE UNPUNCHED GALVANIZED STEEL SQUARE TUBE ANCHOR, FILL THE HOLE WITH A CONCRETE MIX APPROVED BY THE ENGINEER AND LEVEL OFF THE TOP OF CONCRETE.

TYPE C SIGNS, DELINEATORS & MARKERS IN CONCRETE

S.P.179-020-031 S.P.019-605-028

STATE PROJ. NO. 1901-148 (TH 13) SHEET NO. ST33 OF ST48 SHEETS

REVISED: 1-18-06

PLOTTED/REVISED: 6/11/2012
DISTRICT #: METRO
IPLOT NAME: _ST33
PATH & FILENAME: IP_PWP:d1432276\J901-148_ SIGNING TYPICALS.dgn

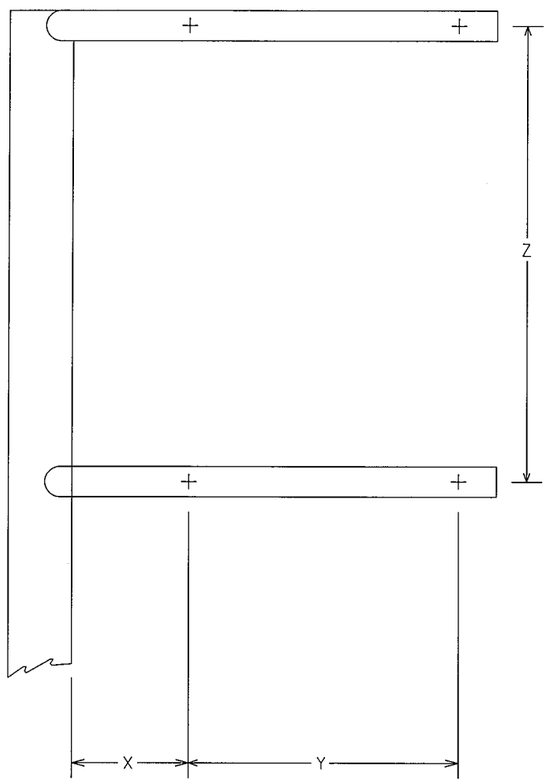

DETAIL "B"

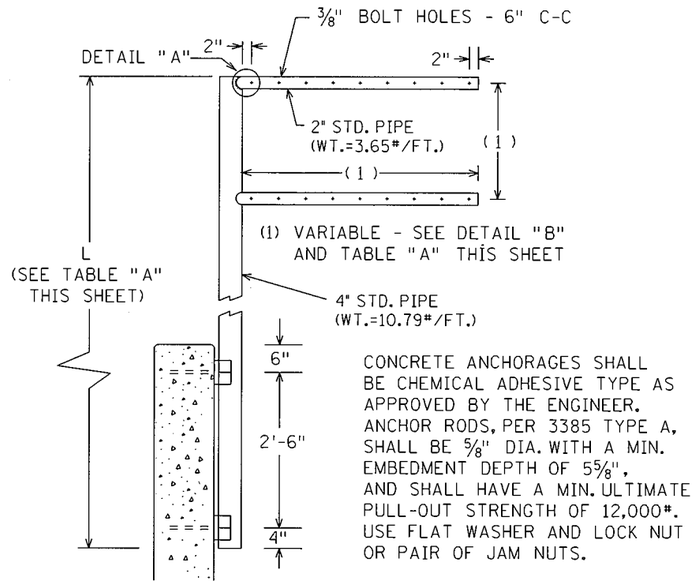

CONCRETE ANCHORAGES SHALL BE CHEMICAL ADHESIVE TYPE AS APPROVED BY THE ENGINEER. ANCHOR RODS, PER 3385 TYPE A, SHALL BE 5/8" DIA. WITH A MIN. EMBEDMENT DEPTH OF 5 5/8", AND SHALL HAVE A MIN. ULTIMATE PULL-OUT STRENGTH OF 12,000#. USE FLAT WASHER AND LOCK NUT OR PAIR OF JAM NUTS.

ELEVATION

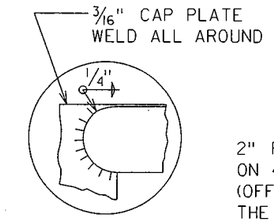

DETAIL "A"

2" PIPE OFFSET ON 4" PIPE (OFFSET SHALL BE IN THE SAME DIRECTION AS THE SIGN IS FACING)

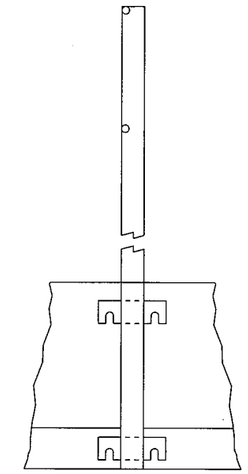

END VIEW

SIGN NO.	X (IN.)	Y (IN.)	Z (IN.)	L (FT.)
C-7	8	30	24	10.5
C-8	8	30	30	11
C-31	8	24	24	10.5

TABLE "A"

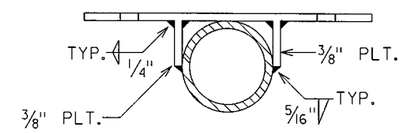

LOWER CONNECTION

NOTES:

1. ALL PIPE MATERIAL SHALL CONFORM TO ASTM DESIGNATION A53, GRADE B, SCHEDULE 40.
2. ALL STEEL FOR STRUCTURAL ITEMS SHALL CONFORM TO MN/DOT 3306 (STRUCTURAL STEEL) UNLESS OTHERWISE NOTED.
3. FOR NOTES AND DETAILS NOT SHOWN, SEE TYPE C AND D SIGN DETAILS.

TYPE C SIGNS MOUNTED ON WALL RAIL

S.P.179-020-031 S.P.019-605-028

STATE PROJ. NO. 1901-148 (TH 13) SHEET NO. ST34 OF ST48 SHEETS

REVISED: 4-9-07

PLOTTED/REVISED: 6/11/2012
DISTRICT #: METRO
IPLOT NAME: _ST36
PATH & FILENAME: \P_PWP:d1432276_J901-148_ SIGNING TYPICALS.dgn

PLOTTED/REVISED: 6/11/2012
DISTRICT #: METRO
IPLOT NAME: _ST35
PATH & FILENAME: IP_PWP.dl432276V_1901-148_ SIGNING TYPICALS.dgn

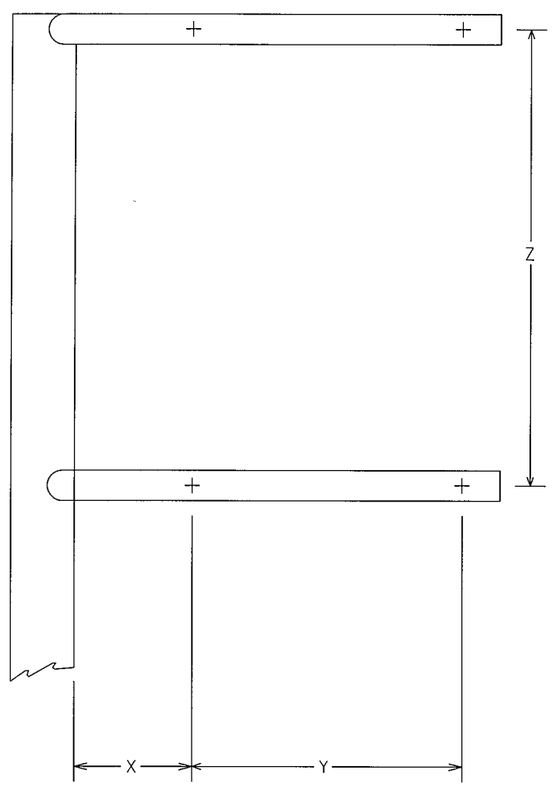

DETAIL "B"

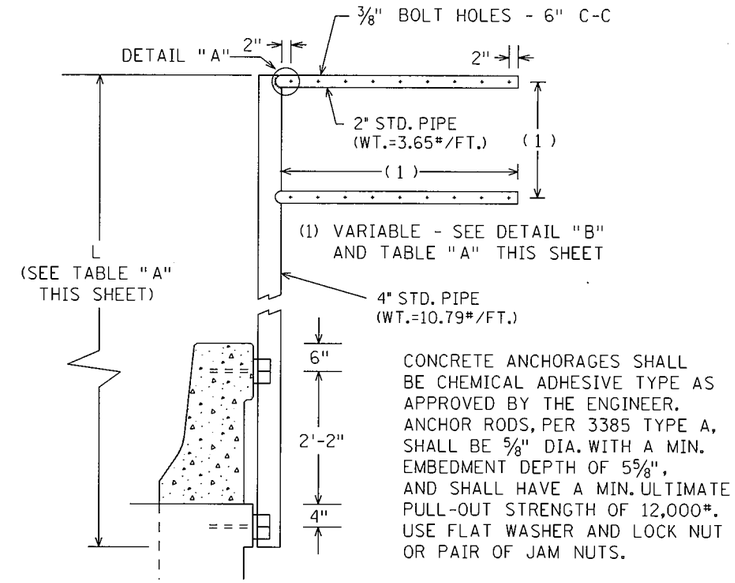

CONCRETE ANCHORAGES SHALL BE CHEMICAL ADHESIVE TYPE AS APPROVED BY THE ENGINEER. ANCHOR RODS, PER 3385 TYPE A, SHALL BE 5/8" DIA. WITH A MIN. EMBEDMENT DEPTH OF 5 5/8", AND SHALL HAVE A MIN. ULTIMATE PULL-OUT STRENGTH OF 12,000#. USE FLAT WASHER AND LOCK NUT OR PAIR OF JAM NUTS.

ELEVATION

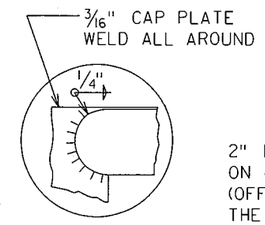

DETAI L "A"

2" PIPE OFFSET ON 4" PIPE (OFFSET SHALL BE IN THE SAME DIRECTION AS THE SIGN IS FACING)

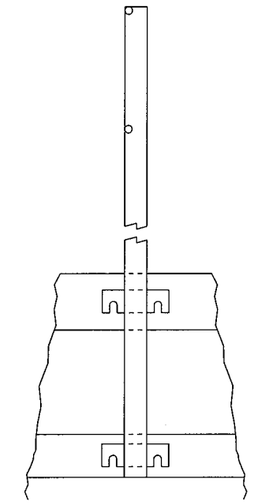

END VIEW

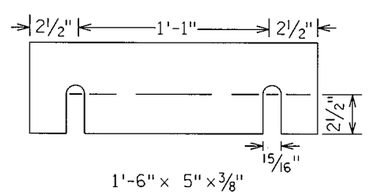

FILL PLATE

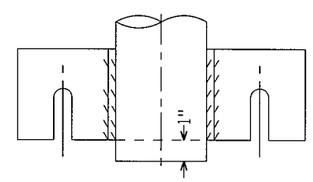

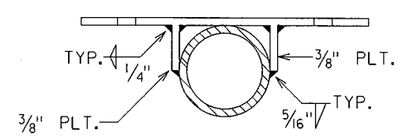

CONNECTION

SIGN NO.	X (IN.)	Y (IN.)	Z (IN.)	L (FT.)
C-36	8	36	12	9.5

TABLE "A"

NOTES:
1. ALL PIPE MATERIAL SHALL CONFORM TO ASTM DESIGNATION A53, GRADE B, SCHEDULE 40.
2. ALL STEEL FOR STRUCTURAL ITEMS SHALL CONFORM TO MN/DOT 3306 (STRUCTURAL STEEL) UNLESS OTHERWISE NOTED.
3. FOR NOTES AND DETAILS NOT SHOWN, SEE TYPE C AND D SIGN DETAILS.

TYPE C & D SIGNS MOUNTED ON WALL RAIL

S.P.179-020-031 S.P.019-605-028

REVISED: 4-9-07

PLOTTED/REVISED: 7/27/2012
DISTRICT #: METRO
IPLOT NAME: ST 36
PATH & FILENAME: IP_PWP.dl432276\MEDIAN SIGN POST ANCHOR_METRO SIGNING TYPICALS.dgn

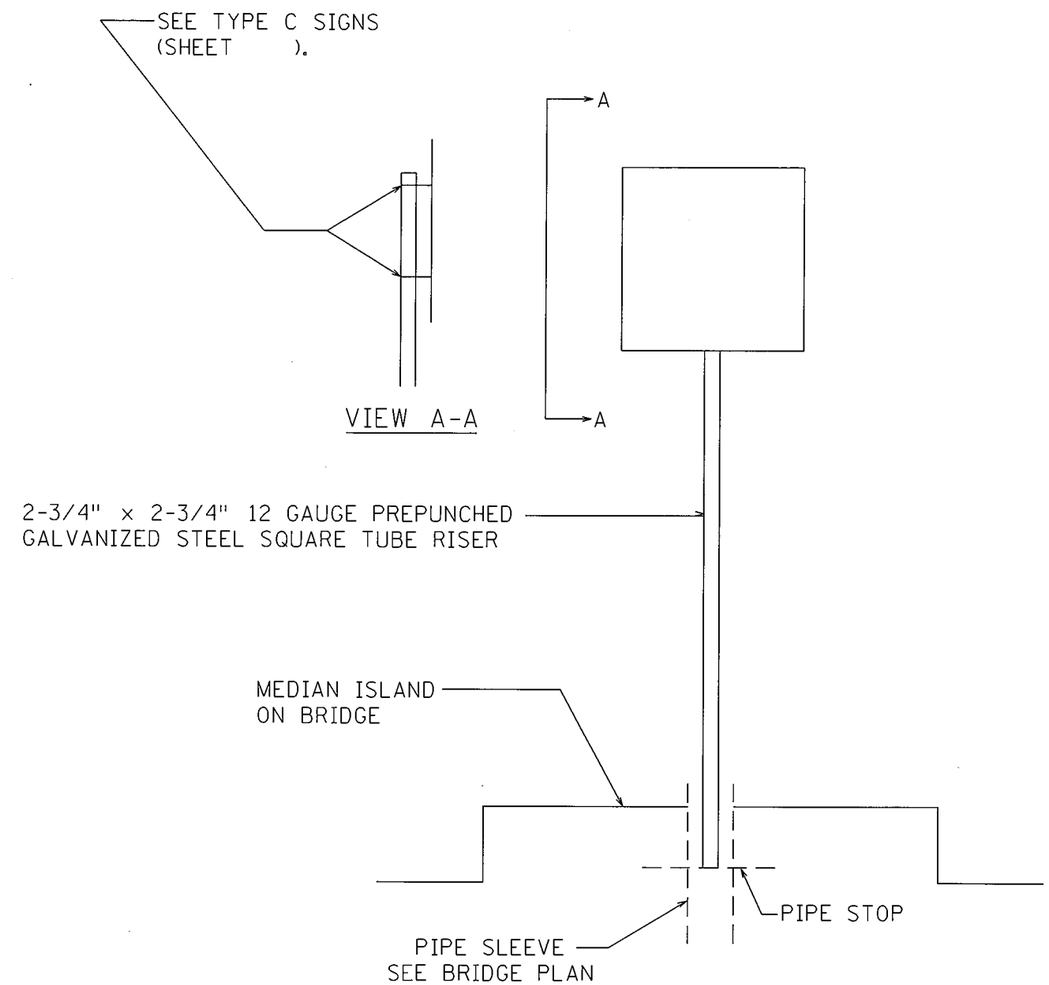

ELEVATION

SEE TYPE C & D SIGN DETAILS
FOR NOTES AND DETAILS NOT SHOWN.

TYPE C SIGNS MOUNTED ON BRIDGE MEDIAN ISLAND

S.P.179-020-031 S.P.019-605-028

REVISED: 6-12-12

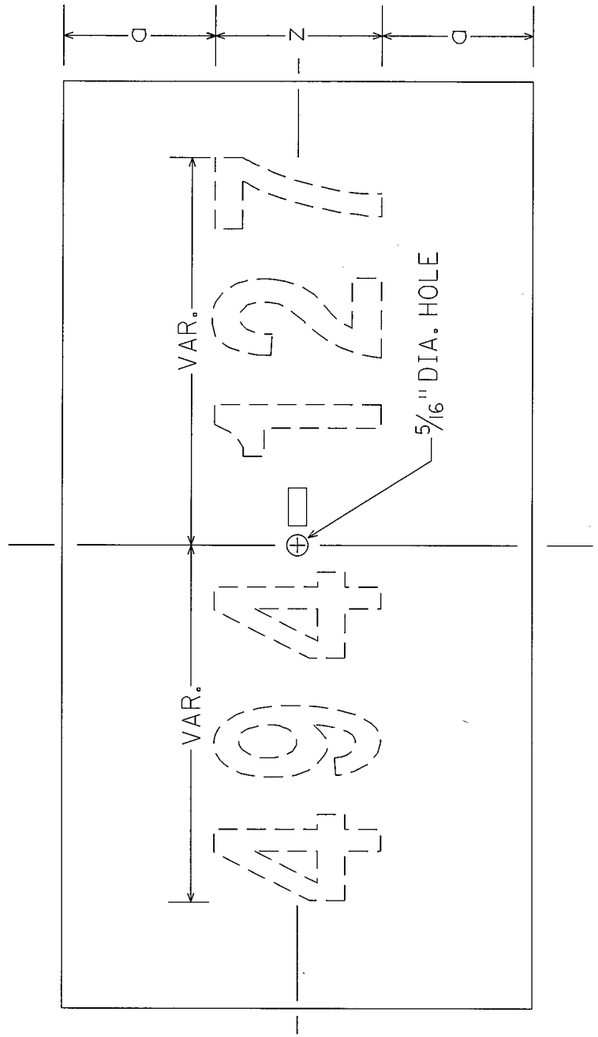

SIZE / DIMENSION	12×6
RADIUS	
MARGIN	
BORDER	
a	2
b	
c	
d	
e	
f	
g	
h	
i	
j	
k	
l	
m	
n	
o	
p	
q	
r	
s	
t	
u	
v	
w	
x	
y	
z	2-C
PUNCH CODE	

NOTES:
1) ALL DIMENSIONS AND SIZES SHOWN ARE IN INCHES.
2) USE APPROPRIATE NUMERALS.
3) PLATE MATERIAL - (MNDOT 3352.2A1a).
4) GREEN BACKGROUND - (MNDOT 3352.2A2b).
5) WHITE NUMERALS OR LETTERS - (MNDOT 3352.2A2b).

STATE OF MINNESOTA
DEPARTMENT OF TRANSPORTATION
STANDARD SIGN DRAWING

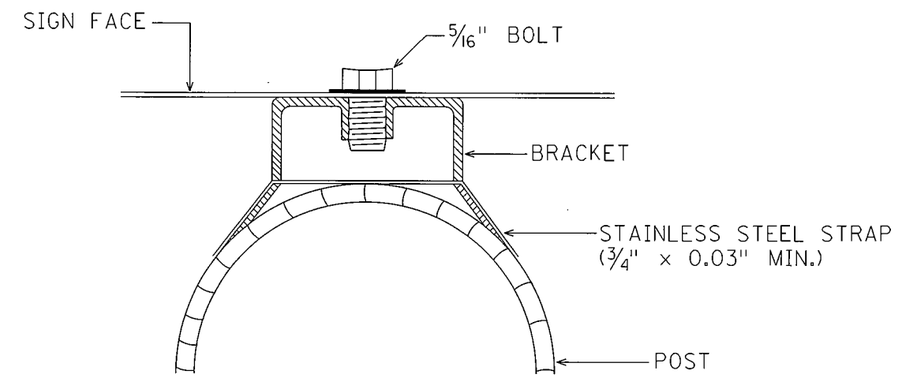

GALVANIZED OR STAINLESS
STEEL BRACKET, BOLT AND
WASHER.

STRAP MOUNTING DETAIL

OH SIGN IDENTIFICATION PLATE

REV. 12-6-11

S.P.179-020-031 S.P.019-605-028

STATE PROJ. NO. 1901-148 (TH 13) SHEET NO. ST37 OF ST48 SHEETS

PLOTTED/REVISED: 6/11/2012
DISTRICT #: METRO
IPLOT NAME: _ST37
PATH & FILENAME: IP_PWP:d1432276v_1901-148_ SIGNING TYPICALS.dgn

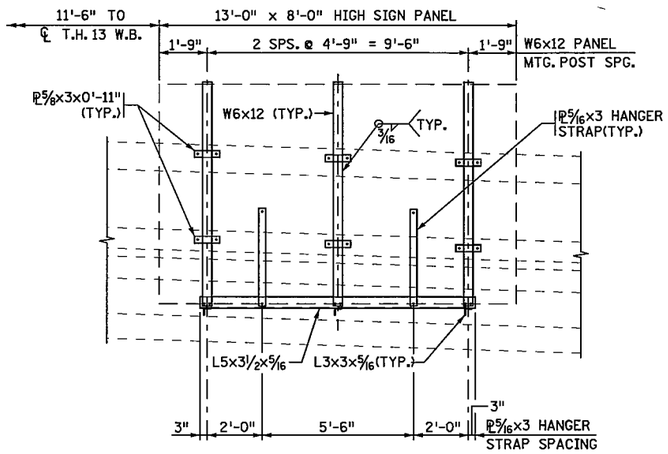

ELEVATION

BRIDGE SLOPES DOWN 3.08% FROM LEFT TO RIGHT

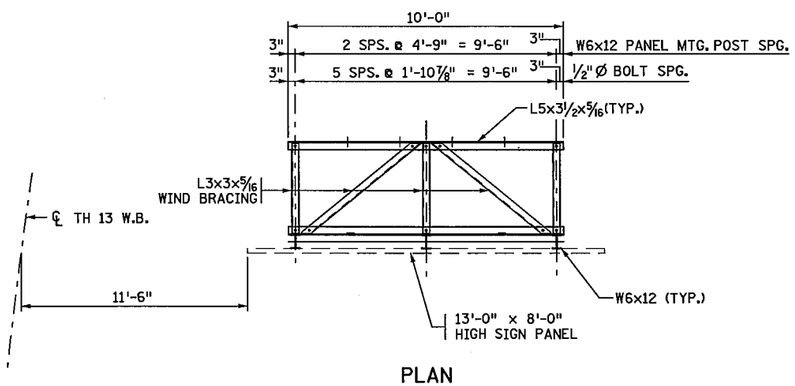

PLAN

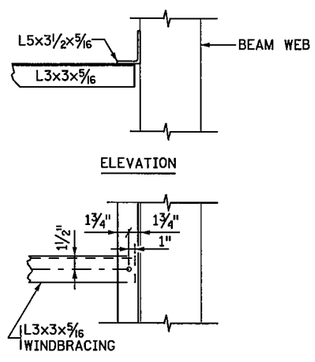

DETAIL "B"

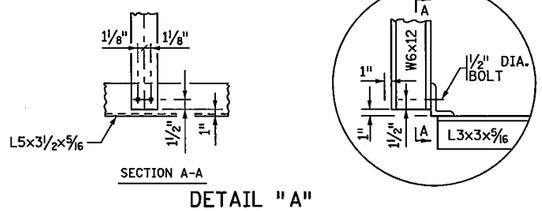

DETAIL "A"

TYP. AT PANEL
MOUNTING POST

SIGN NOTES

CONTRACTOR SHALL VERIFY DIMENSIONS BEFORE FABRICATION.

SIGN SUPPORTS TO BE VERTICAL.

SIGN TO BE PLACED HORIZONTAL.

ALL CONNECTIONS TO BE 1/2"Ø BOLTS PER MN/DOT 3391 (A325), EXCEPT AS NOTED. HOLES TO BE 9/16"Ø .

BOLT ANCHORAGES SHALL BE 1/2"Ø CHEMICAL ADHESIVE TYPE, APPROVED BY THE ENGINEER. HOLES TO BE 4 1/2" DEEP, MINIMUM, AND SHALL HAVE A MINIMUM ULTIMATE PULLOUT STRENGTH OF 8000#.

FOR GENERAL NOTES AND DETAILS NOT SHOWN SEE STANDARD SHEETS.

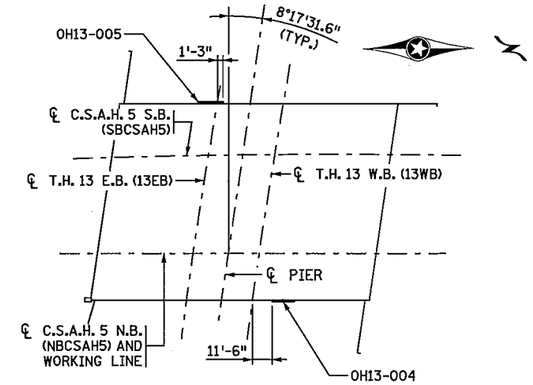

SIGN LOCATION

BR. NO. 19036 T.H. 13
UNDER C.S.A.H. 5

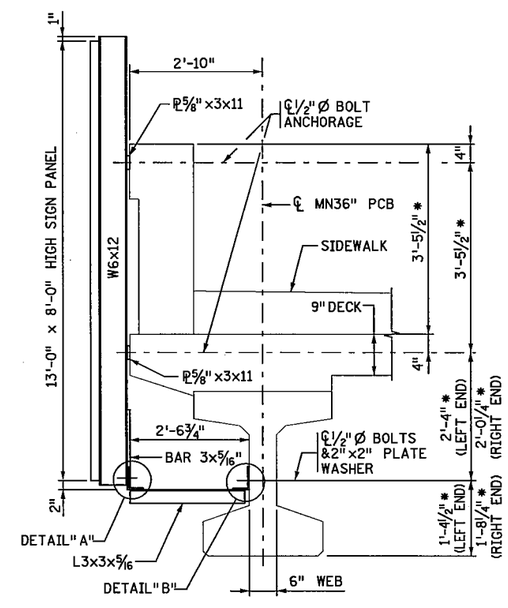

TYPICAL SECTION

* FIELD VERIFY

TRUSS QUANTITY

POUNDS 620

I HEREBY CERTIFY THAT THIS SHEET WAS PREPARED BY ME OR UNDER MY DIRECT SUPERVISION AND THAT I AM A DULY LICENSED PROFESSIONAL ENGINEER UNDER THE LAWS OF THE STATE OF MINNESOTA.

SIGNED Thomas E. Merritt DATE 6/20/2012
LICENSED PROFESSIONAL ENGINEER

NAME: THOMAS E. MERRITT P.E. LIC NO. 18904

STATE OF MINNESOTA
DEPARTMENT OF TRANSPORTATION

OVERHEAD SIGN DETAILS
OH13-004

DES: T.E.M.	DR: T.K.B.	DATE DRAWN:	
CHK: D.K.L.	CHK: T.E.M.	6/20/2012	

FILENAME: S:\FabricationMethods\FINAL_SGN\OH13-004\OH13-004.dgn
TIME : 11:22:35 AM
PLOTTED : 25-JUN-2012
PATH & FILENAME:

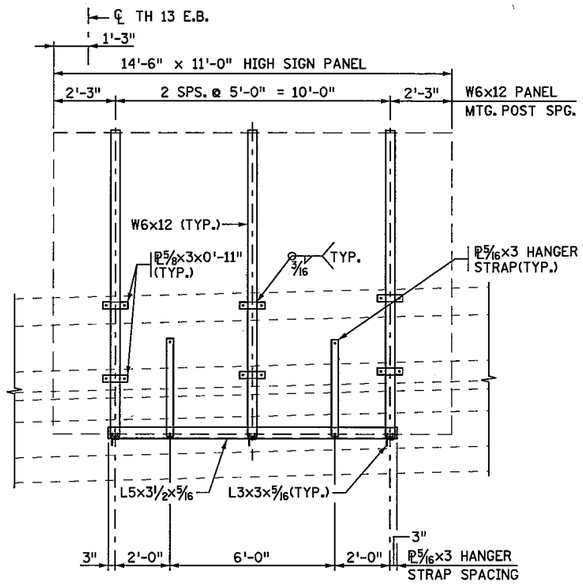

ELEVATION

BRIDGE SLOPES DOWN 2.55% FROM RIGHT TO LEFT

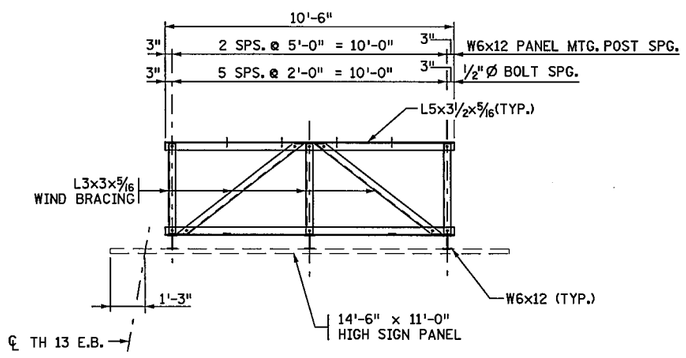

PLAN

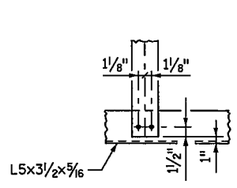

SECTION A-A

DETAIL "A"

TYP. AT PANEL MOUNTING POST

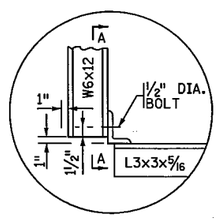

SIGN NOTES

CONTRACTOR SHALL VERIFY DIMENSIONS BEFORE FABRICATION.

SIGN SUPPORTS TO BE VERTICAL.

SIGN TO BE PLACED HORIZONTAL.

ALL CONNECTIONS TO BE 1/2"Ø BOLTS PER MN/DOT 3391 (A325), EXCEPT AS NOTED. HOLES TO BE 9/16"Ø.

BOLT ANCHORAGES SHALL BE 1/2"Ø CHEMICAL ADHESIVE TYPE, APPROVED BY THE ENGINEER. HOLES TO BE 4 1/2" DEEP, MINIMUM. AND SHALL HAVE A MINIMUM ULTIMATE PULLOUT STRENGTH OF 8000#.

FOR GENERAL NOTES AND DETAILS NOT SHOWN SEE STANDARD SHEETS.

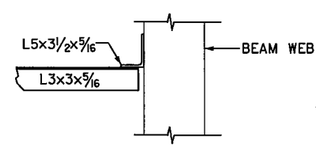

ELEVATION

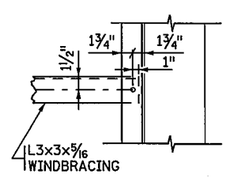

PLAN

DETAIL "B"

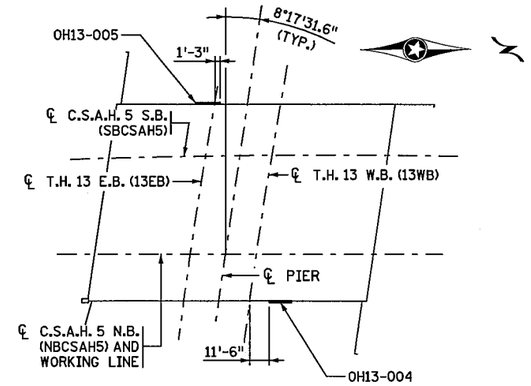

SIGN LOCATION

BR. NO. 19036 T.H. 13 UNDER C.S.A.H. 5

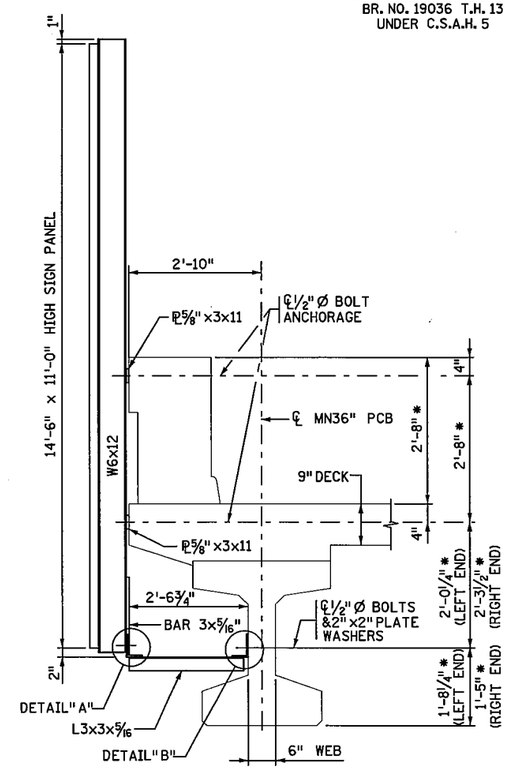

TYPICAL SECTION

* FIELD VERIFY

TRUSS QUANTITY

POUNDS 740

I HEREBY CERTIFY THAT THIS SHEET WAS PREPARED BY ME OR UNDER MY DIRECT SUPERVISION AND THAT I AM A DULY LICENSED PROFESSIONAL ENGINEER UNDER THE LAWS OF THE STATE OF MINNESOTA.

SIGNED Thomas E. Merritt LICENSED PROFESSIONAL ENGINEER DATE 6/20/2012

NAME: THOMAS E. MERRITT P.E. LIC NO. 18904

STATE OF MINNESOTA
DEPARTMENT OF TRANSPORTATION

OVERHEAD SIGN DETAILS
OH13-005

DES: T.E.M.	DR: T.K.B.	DATE DRAWN:
CHK: D.K.L.	CHK: T.E.M.	6/20/2012

FILENAME: S:\Fabrication\Methods\FINAL.SGN\OH13-005\OH13-005.sgn.dgn
TIME: 11:23:28 AM
PLOTTED: 25-JUN-2012
PATH & FILENAME:

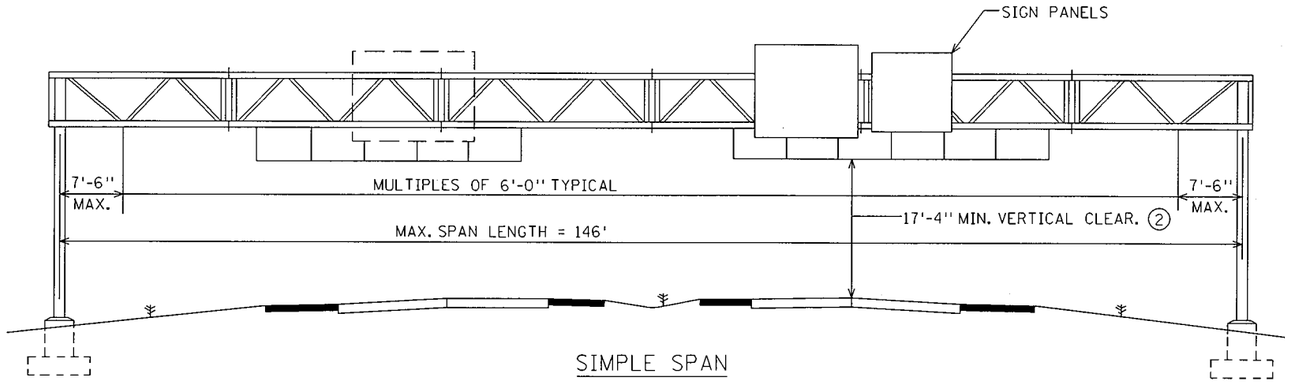

SIMPLE SPAN

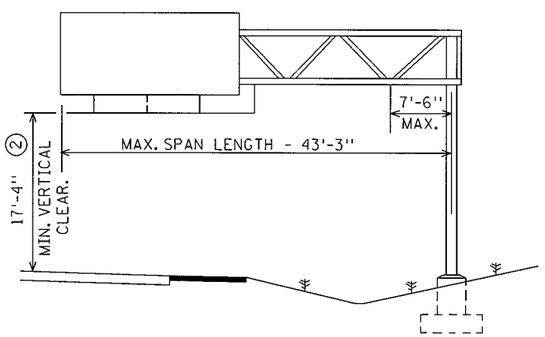

CANTILEVER

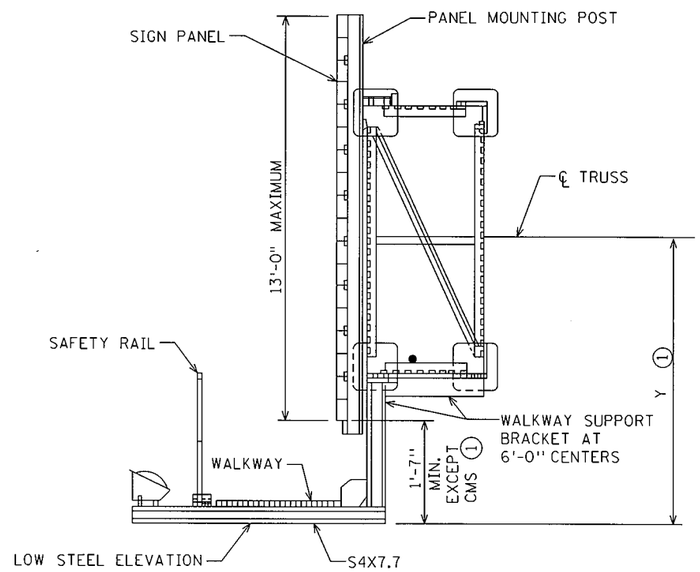

SECTION

SIGN HEIGHT	Y ①	
6'-6"	4'-4"	CMS (NEW LED)
7'-0"	4'-7"	
7'-6"	4'-10"	
8'-0"	5'-1"	CMS (LED)
8'-6"	5'-4"	
9'-0"	5'-7"	CMS (DRUM)
9'-6"	5'-10"	
10'-0"	6'-1"	
10'-6"	6'-4"	
11'-0"	6'-7"	
11'-6"	6'-10"	
12'-0"	7'-1"	
12'-6"	7'-4"	
13'-0"	7'-7"	

INDEX OF STANDARD SIGN DRAWINGS

DRAWING	TITLE
ST-1	GENERAL ELEVATION AND NOTES
ST-2	CAMBER, POST IDENTIFICATION AND ESTIMATED QUANTITIES
ST-3	FOUNDATIONS AND ANCHOR RODS
ST-4	TRUSS/POST CONNECTION & BASEPLATE
ST-5	SIGN TRUSS DETAILS - TYPE A
ST-6	SIGN TRUSS DETAILS - TYPE B
ST-7	SIGN TRUSS DETAILS - TYPE C
ST-8	WALKWAY DETAILS
ST-9	FOLDING HANDRAIL
ST-10	SIGN PANEL AND PANEL MOUNTING POST DETAILS
ST-11	ELECTRICAL DETAILS
ST-12	ELECTRICAL DETAILS
ST-13	ELECTRICAL DETAILS (CMS SIGNS)

SPECIFIC NOTES:

① DIMENSION Y IS CONSTANT AND BASED ON THE DEEPEST SIGN PANEL ABOVE THAT WALKWAY. WHEN STANDARD SIGN PANEL(S) AND CMS ARE MOUNTED ON THE SAME SPAN, DIMENSION Y SHALL BE GOVERNED BY THE CMS.

② MINIMUM CLEARANCE WILL BE MEASURED FROM THE HIGHEST ELEVATION OF PAVEMENT, SHOULDERS, AND MOUNTABLE CURBS, OR IF INSURMOUNTABLE CURBS ARE USED, THE HIGHEST ELEVATION BETWEEN CURB LINES.

GENERAL NOTES:

DESIGN SPECIFICATIONS:

TRUSS, POST, & HARDWARE:
AASHTO STANDARD SPECIFICATIONS FOR STRUCTURAL SUPPORTS FOR HIGHWAY SIGNS, LUMINAIRES AND TRAFFIC SIGNALS DATED 1999.

LOADING:

WIND LOAD 90 M.P.H. NORMAL TO SIGN FACE IN COMBINATION WITH OTHER LOADS OUTLINED IN THE DESIGN SPECIFICATIONS.

UNIT STRESSES:

CONCRETE---------- Fc = 1,600 PSI
REINFORCEMENT STEEL---------- Fs = 24,000 PSI
FOOTING SOIL PRESSURE---------- 1-1/4 TONS PER SQ. FT.

MATERIALS:

STRUCTURAL STEEL (EXCEPT POST, TUBES)- MNDOT 3306
POST STEEL---------- VARIES
HIGH STRENGTH BOLTS--------- MNDOT 3391.2B
ANCHOR RODS---------- MNDOT 3385
CASTINGS---------- MNDOT 3322
REINFORCEMENT
BARS---------- MNDOT 3301
SPIRAL---------- MNDOT 3305 NO SPLICES
WALKWAY GRATING---------- FEDERAL SPECIFICATIONS RR-G-661b, TYPE 1, STEEL
CONCRETE---------- MNDOT 2461 (MIX 3Y43)

FINISH:

ALL COMPONENTS SHALL BE GALVANIZED AFTER FABRICATION EXCEPT REINFORCEMENT BARS, LOWER PORTION OF ANCHOR RODS, ALUMINUM, AND OTHER NON FERROUS INCIDENTALS. GALVANIZING SHALL CONFORM TO MNDOT 3392 OR MNDOT 3394 AS APPLICABLE.
BEARING SURFACES MUST BE SMOOTH.

FABRICATION:

FABRICATION OF STRUCTURAL METALS SHALL BE IN ACCORDANCE WITH MNDOT 2471, MNDOT 2564 AND THE APPLICABLE SPECIAL PROVISIONS. ALL WELDING TO BE CONTINUOUS. ALL CONTACT SURFACES MUST BE COMPLETELY SEALED.

INSPECTION:

INSPECTION BEFORE AND AFTER GALVANIZING PER MNDOT 1511 AND MNDOT 2471.

STANDARD OVERHEAD SIGN SUPPORTS
INTERIM DESIGN B

GENERAL ELEVATIONS AND NOTES

DRAWING ST-1

S.P.179-020-031 S.P.019-605-028

STATE PROJ. NO. 1901-148 (TH 13) SHEET NO. ST40 OF ST48 SHEETS

PLOTTED/REVISED: 6/11/2012
DISTRICT #: METRO
IPLOT NAME: ST-1
PATH & FILENAME: IP_PWP:d1432276vt_j90h148_ SIGNING TYPICALS.dgn
REV. 12-5-2011

SIMPLE SPAN

SIMPLE SPAN TRUSS CAMBER												
SPAN	40	50	60	70	80	90	100	110	120	130	140	150
CAMBER	1/4	7/16	5/8	13/16	1 1/16	1 3/8	1 11/16	2	2 3/8	2 13/16	3 1/4	3 3/4
DL DEFLECTION	0	1/16	1/16	1/8	1/4	3/8	9/16	13/16	1 1/8	1 1/2	2 1/16	2 11/16
RESIDUAL CAMBER	1/4	3/8	9/16	11/16	13/16	1	1 1/8	1 3/16	1 1/4	1 5/16	1 3/16	1 1/16

NOTE:
CAMBER AND DEFLECTIONS SHOWN ARE AT ℄ SPAN. THE DEFLECTIONS AND CAMBER AT THE QUARTER POINTS SHALL BE APPROXIMATELY 75% OF THESE VALUES.

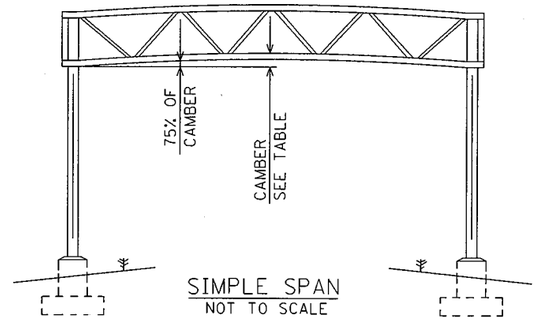

SIMPLE SPAN
NOT TO SCALE

CANTILEVER SPAN

CANTILEVER SPAN TRUSS CAMBER					
SPAN	15'	20'	30'	40'	45'
CAMBER	1/8	1/4	5/8	1 1/16	1 1/4
DL DEFLECTION	0	0	1/16	3/16	1/4
RESIDUAL CAMBER	1/8	1/4	9/16	7/8	1

NOTE:
CAMBER AND DEFLECTIONS SHOWN ARE SHOWN AT END OF CANTILEVER.

WHEN ERECTING CANTILEVER TRUSSES, THE POSTS SHALL BE SET 1/8" PER FOOT OUT OF PLUMB TO COMPENSATE FOR THE BENDING OF THE POSTS.

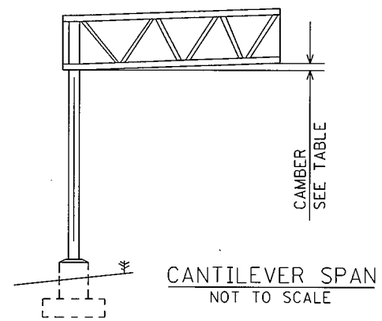

CANTILEVER SPAN
NOT TO SCALE

TRUSS QUANTITIES		
USE LENGTH FROM ℄ POST WHEN CALCULATING TOTAL WEIGHTS.		
TRUSS TYPE A	TRUSS TYPE B	TRUSS TYPE C
123 LBS./FT.	168 LBS./FT.	196 LBS./FT.

PANEL MOUNTING POST QUANTITIES INCLUDES MOUNTING ANGLES	
PANEL HEIGHT	WEIGHT/POST
6'-6"	70
7'-0"	74
7'-6"	78
8'-0"	82
8'-6"	86
9'-0"	90
9'-6"	93
10'-0"	97
10'-6"	101
11'-0"	105
11'-6"	160
12'-0"	166
12'-6"	172
13'-0"	178

WALKWAY SUPPORT QUANTITIES

USE MAXIMUM PANEL HEIGHT ON SPAN TO CALCULATE QUANTITIES. WHEN CONVENTIONAL SIGN PANEL(S) AND CMS ARE MOUNTED ON THE SAME SPAN, QUANTITIES SHALL BE GOVERNED BY THE CMS.

	PANEL HEIGHT	TRUSS TYPE (WEIGHT/SUPPORT) A	B	C
CMS(NEW LED)	6'-6"	99	105	113
	7'-0"	101	107	115
	7'-6"	103	109	117
CMS (LED)	8'-0"	105	111	119
	8'-6"	107	113	121
CMS (DRUM)	9'-0"	109	115	123
	9'-6"	111	117	125
	10'-0"	113	119	127
	10'-6"	115	121	129
	11'-0"	135	142	151
	11'-6"	138	144	153
	12'-0"	141	147	156
	12'-6"	143	150	159
	13'-0"	146	153	162

FOR FOUNDATION QUANTITIES SEE DRAWING ST-3

WALKWAY WEIGHTS:

1. USE 3'-4 3/4" WIDE GRATING @ 44 LBS/FT.
2. WEIGHT INCLUDES HANDRAIL (12 LBS/FT.) AND FIXTURE MOUNTING CHANNELS (4 LBS/FT.).

TABLE 1 - POST IDENTIFICATION					
POST IDENTIFICATION NUMBER	BASEPLATE DESIGN	PERMISSIBLE PIPE SECTIONS MIN. YIELD=35 KSI OUTSIDE DIAMETER (INCH)	WALL THICKNESS (INCH)	MIN. YIELD=42 KSI OUTSIDE DIAMETER (INCH)	WALL THICKNESS (INCH)
1	A	N.A.	N.A.	18	0.250
2	A	18	0.375	18	0.312
3	A	18	0.500	18	0.375
4	A	18	0.562	18	0.500
5	B	18	0.938	18	0.750
6	B	20	0.594	20	0.500
7	B	N.A.	N.A.	20	0.812
WALL THICKNESS IS MINIMUM, THINNER WALLS WILL NOT BE APPROVED					

POST IDENTIFICATION NOTES:

POST MATERIAL SHALL CONFORM TO ONE OF THE FOLLOWING SPECIFICATIONS:
ASTM A709, GRADE 36
ASTM A53, GRADE B
API 5L, GRADES B, X42, X46, X52, X56, X60, X65

CONTRACTOR SHALL DEMONSTRATE THAT THE POST MATERIAL MEETS THE REQUIREMENTS OF ONE OF THE ABOVE CITED SPECIFICATIONS AND THE MINIMUM YIELD STRENGTH.

NO SPLICES OF ANY KIND WILL BE PERMITTED IN POSTS INTENDED FOR USE IN CANTILEVER TYPE STRUCTURES (BRIDGE TYPE BC).

ONE OF TWO POSTS FOR SIMPLE SPAN STRUCTURES (BRIDGE TYPE S) MAY INCORPORATE ONE WELDED CIRCUMFERENTIAL BUTT SPLICE CONFORMING TO AWS D1.1 DETAIL B-U2 IN THE UPPER 1/3 OF ITS LENGTH. BACK UP RINGS FOR THESE WELDED SPLICES SHALL BE COMMERCIAL PRODUCTS. BUTT WELDS REQUIRE RADIOGRAPHIC INSPECTION (MNDOT 2471.3).

ALL RADIOGRAPHIC INSPECTIONS AND MAGNETIC PARTICLE TESTING REPORTS AND RADIOGRAPHIC FILMS SHALL BECOME THE PROPERTY OF THE DEPARTMENT.

SEE DRAWING ST-4 FOR BASEPLATE DETAILS.

POST QUANTITIES

QUANTITIES INCLUDE ANCHORAGE ASSEMBLY AND TRUSS CONNECTION PLATES. PAY LENGTH OF POSTS IS FROM THE BOTTOM OF THE BASE PLATE (ELEV. A) TO THE TOP OF THE TRUSS. POST QUANTITIES ARE BASED ON GRADE 42 STEEL. NO ADJUSTMENTS WILL BE MADE IN THE QUANTITIES FOR THE USE OF GRADE 35 STEEL POSTS.

POST TYPE	CANTILEVER TRUSS TYPE A	CANTILEVER TRUSS TYPE B	SIMPLE SPAN TRUSS TYPE A	SIMPLE SPAN TRUSS TYPE B	SIMPLE SPAN TRUSS TYPE C
1	1880+47 LBS/FT	1910+47 LBS/FT	1870+47 LBS/FT	1890+47 LBS/FT	1915+47 LBS/FT
2	1880+59 LBS/FT	1910+59 LBS/FT	1870+59 LBS/FT	1890+59 LBS/FT	1915+59 LBS/FT
3	1880+71 LBS/FT	1910+71 LBS/FT	1870+71 LBS/FT	1890+71 LBS/FT	1915+71 LBS/FT
4	1880+94 LBS/FT	1910+94 LBS/FT	1870+94 LBS/FT	1890+94 LBS/FT	1915+94 LBS/FT
5	2470+138 LBS/FT	2500+138 LBS/FT	2460+138 LBS/FT	2480+138 LBS/FT	2505+138 LBS/FT
6	N/A	2500+104 LBS/FT	N/A	2545+104 LBS/FT	2570+104 LBS/FT
7	N/A	2500+167 LBS/FT	N/A	2545+167 LBS/FT	2570+167 LBS/FT

STANDARD OVERHEAD SIGN SUPPORTS
INTERIM DESIGN B

CAMBER, POST IDENTIFICATION AND ESTIMATED QUANTITIES

DRAWING ST-2

S.P.179-020-031 S.P.019-605-028

STATE PROJ. NO. 1901-148 (TH 13) SHEET NO. ST41 OF ST48 SHEETS

PLOTTED/REVISED: 6/11/2012
DISTRICT #: METRO
IPLOT NAME: ST-2
PATH & FILENAME: IP_PWP:d1432276v_1901-148_ SIGNING TYPICALS.dgn

PLOTTED/REVISED: 6/11/2012
DISTRICT #: METRO
IPLOT NAME: ST-3
PATH & FILENAME: IP_PWP:d1432276V_J90I148_ SIGNING TYPICALS.dgn

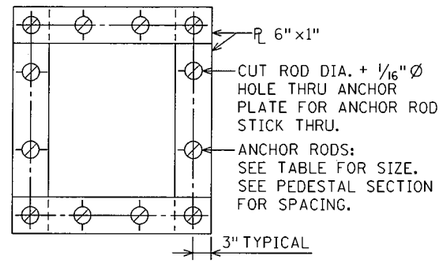

NOTE: ANCHOR PLATES SHOWN TYPICAL FOR ALL ANCHOR ROD SPACING.

ANCHOR PLATE PLAN

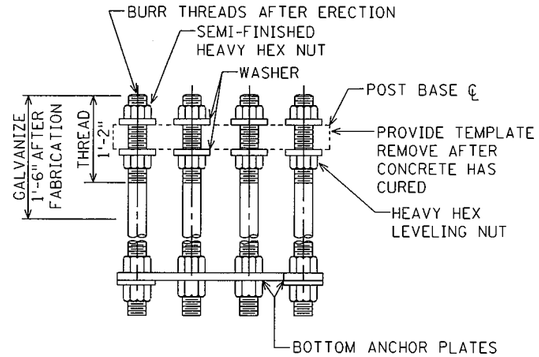

ELEVATION

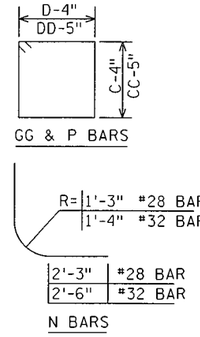

J, K, L, M, FF AND HH ARE STRAIGHT BARS
BAR BENDING DIAGRAMS

ANCHOR ROD DETAILS

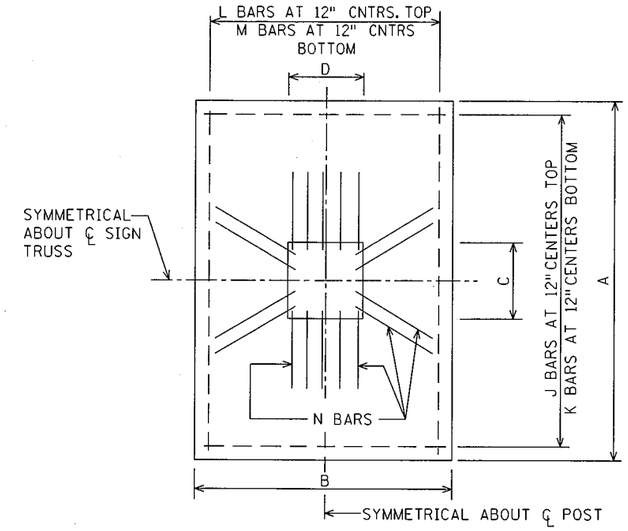

PLAN

SPECIFIC NOTES:

1. G IS IN FEET. ROUND UP TO WHOLE NUMBER. E.G. G=4.10/2G=8.2 NO. REQ'D=9.
2. G AND R ARE IN FEET.
3. BEND AS REQUIRED TO FORM A CLOSED LOOP.
4. FOR STRUCTURE STEEL SEE SPREAD FOOTING.
5. MUST BE FORMED A MIN. OF 6" BELOW THE GROUND SURFACE. THE SOIL EXCAVATED FOR FORMING SHALL BE BACKFILLED AND TAMPED TO EQUIVALENT COMPACTION AS SURROUNDING MATERAL.
6. SPECIAL LARGE RADIUS BENDS ARE REQUIRED. SEE "BAR BENDING DIAGRAMS" FOR SIZES OF RADII.

GENERAL NOTES:

1. SEE THE FORMAT SHEET FOR FOOTING LOCATIONS. POST DESIGNATIONS, TOP OF PEDESTAL ELEVATIONS AND BOTTOM OF FOOTING ELEVATIONS.
2. ALL CONCRETE SHALL CONFORM TO CONCRETE MIX 3Y43 (MNDOT 2461).
3. ALL BAR DIMENSIONS ARE OUT TO OUT OF BARS.
4. ALL SPREAD FOOTINGS HAVE AN ALLOWABLE DESIGN BEARING PRESSURE OF 1 1/4 T PER SQUARE FOOT.
5. DRILLED SHAFTS SHALL BE USED ONLY WHEN SPECIFIED IN THE CONTRACT PLANS.
6. THE DRILLED SHAFTS HAVE AN ALLOWABLE DESIGN LATERAL BEARING PRESSURE OF 250 LBS. PER SQ. FT. PER FOOT OF DEPTH.
7. UNLESS OTHERWISE NOTED, ALL REINFORCEMENT BARS SHALL BE EPOXY COATED IN ACCORDANCE WITH MMNDOT3301. SPIRAL BARS AND J, K, L, & M BARS NEED NOT BE EPOXY COATED.
8. THE FOLLOWING TORQUE VALUES SHALL BE USED WHEN INSTALLING ALL ANCHOR NUTS FOR OVERHEAD SIGN STRUCTURES:

ANCHOR BOLT DIAMETER	TORQUE (FT./LBS.)
2 1/4"	375
2 1/2"	450

THE CONTRACTOR SHALL BURR THE THREADS OF THE ANCHOR BOLTS IN ACCORDANCE WITH MNDOT 2402.3H AFTER TORQUEING NUTS.

NOTE (5): MUST BE FORMED A MINIMUM OF 6" BELOW THE GROUND SURFACE. THE EXCAVATED AREA FOR FORMING SHALL BE BACKFILLED AND TAMPED WITH EQUIVALENT TO SURROUNDING MATERIAL.

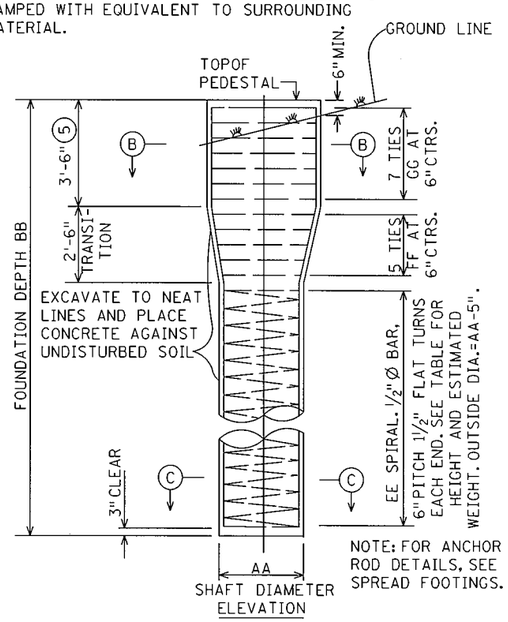

NOTE: FOR ANCHOR ROD DETAILS, SEE SPREAD FOOTINGS.

ELEVATION

DRILLED SHAFT

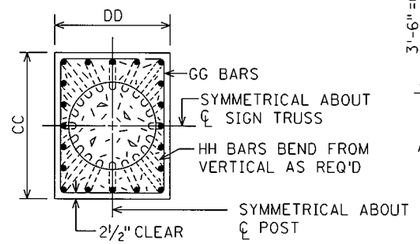

SECTION B-B

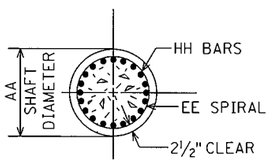

SECTION C-C

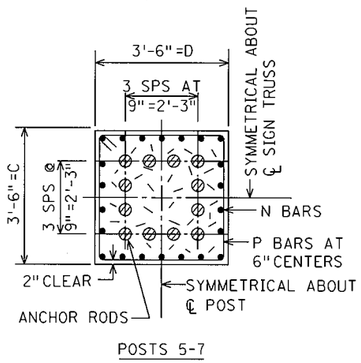

POSTS 5-7

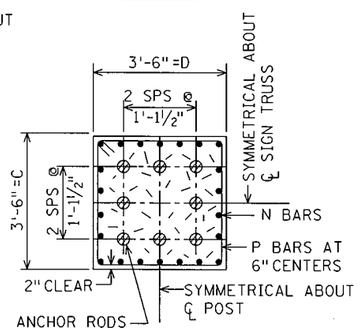

POSTS 1-4

PEDESTAL CROSS SECTIONS A-A

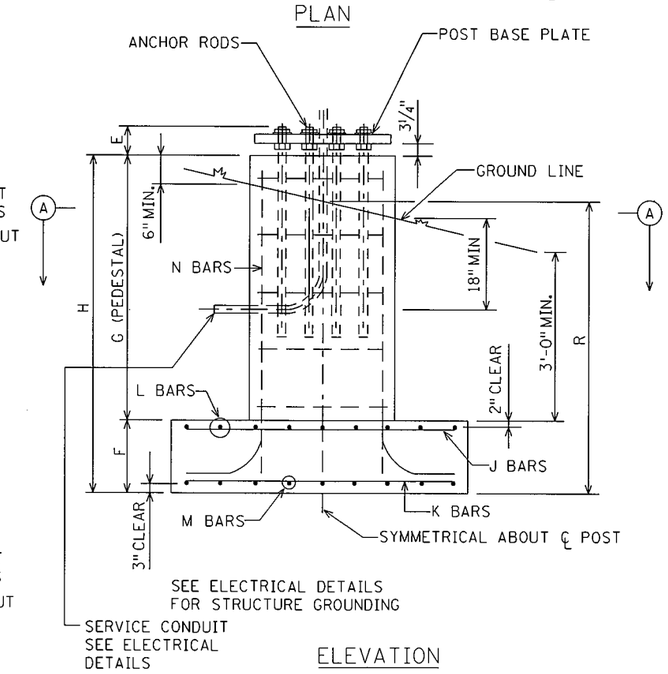

ELEVATION
SPREAD FOOTINGS

DRILLED SHAFT										
POST	DIMENSIONS				REINFORCING BARS				ESTIMATED QUANTITIES (4)	
NO.	AA	BB	CC	DD	EE	FF (3)	GG	HH	CONCRETE CY	REIN STEEL LBS.
1-4	3'-0" Ø	23'-0"	3'-6"	3'-6"	16'-6" x 197 LBS.	5 #16x 14'-1"	7 #16x 14'-1"	20 #28x 22'-7"	6.9	1910
5-7	4'-0" Ø	29'-0"	4'-0"	4'-0"	22'-6" x 362 LBS.	5 #16x 16'-1"	7 #16x 16'-1"	24 #32x 28'-7"	14.1	3490

SPREAD FOOTINGS			
SUMMARY OF ESTIMATED QUANTITIES			
CONCRETE CY (2)	REIN. STEEL LBS. (2)	ANCH. ASSM. LBS	ST. EXC. C.Y. (2)
9.3 + 0.46 G	945 + 98G	781	7.4 R
16.7 + 0.46 G	2333 + 133G	1320	12.1 R

SPREAD FOOTINGS																												
POST							ANCHOR RODS			J REIN. BARS			K REIN. BARS			L REIN. BARS			M REIN. BARS			(6) N REIN. BARS			P REIN. BARS (1)		
NO.	A	B	C	D	E	F	NO. REQ'D	DIA.	LENGTH	NO. REQ'D	SIZE	LENGTH	NO. REQ'D	SIZE	LENGTH	NO. REQ'D	SIZE	LENGTH	NO. REQ'D	SIZE	LENGTH	NO. REQ'D	SIZE	LENGTH	NO. REQ'D	SIZE	LENGTH
1-4	14'-0"	9'-0"	3'-6"	3'-6"	8 1/2"	2'-0"	8	2 1/4"	3'-10 1/2"	14	#13	8'-6"	14	#19	8'-6"	10	#16	13'-6"	10	#22	13'-6"	20	#28	H + 2'-6"	2G	#16	14'-3"
5-7	18'-0"	12'-6"	3'-6"	3'-6"	9"	2'-0"	12	2 1/2"	4'-0"	19	#13	12'-0"	19	#19	12'-0"	13	#19	17'-6"	13	#32	17'-6"	24	#32	H + 2'-9"	2G	#16	14'-3"

STANDARD OVERHEAD SIGN SUPPORTS
INTERIM DESIGN B

FOUNDATIONS AND ANCHOR RODS

DRAWING ST-3

S.P.179-020-031 S.P.019-605-028

STATE PROJ. NO. 1901-148 (TH 13) SHEET NO. ST42 OF ST48 SHEETS

REV. 4-2-2012

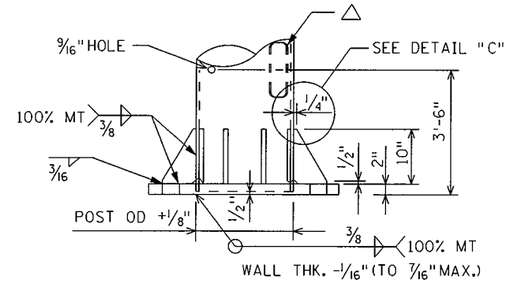

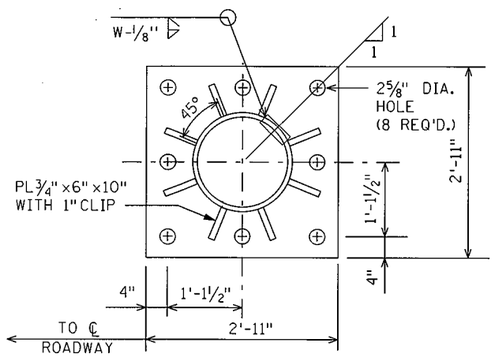

PLAN & ELEVATION - BASEPLATE TYPE A

POST NO. 1 THRU 4

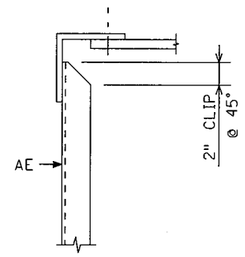

VIEW A-A

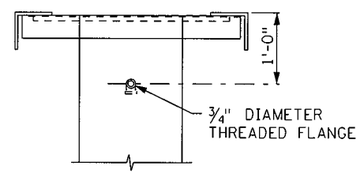

VIEW B-B

(TYPE 'E' POSTS)

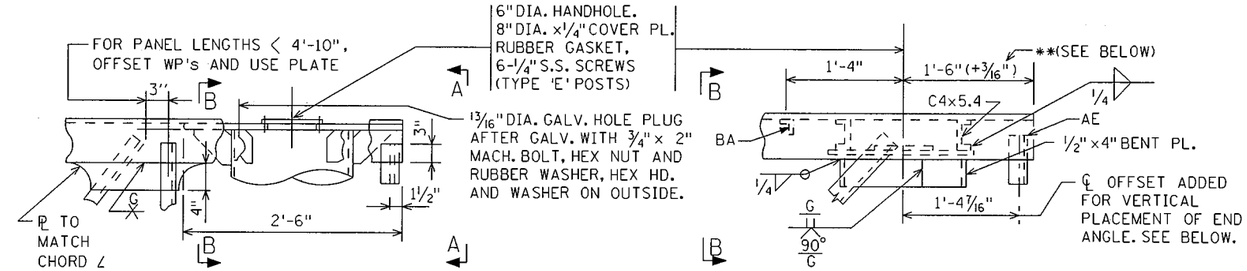

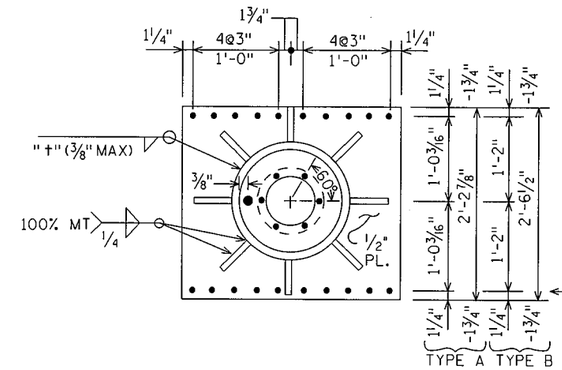

UPPER JUNCTION

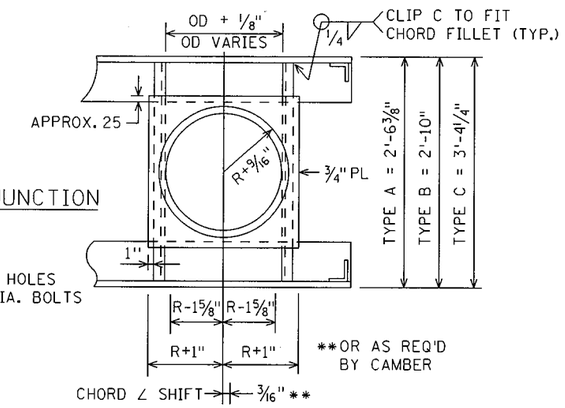

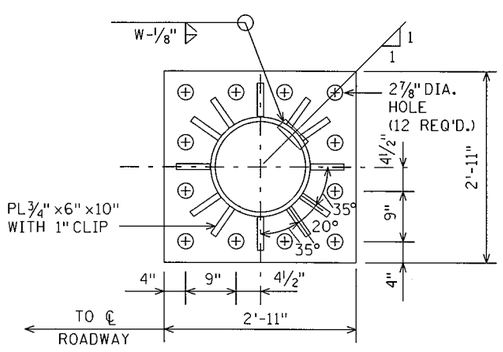

PLAN & ELEVATION - BASEPLATE TYPE B

POST NO. 5 THRU 7

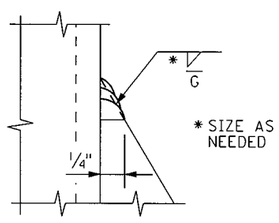

DETAIL "C"

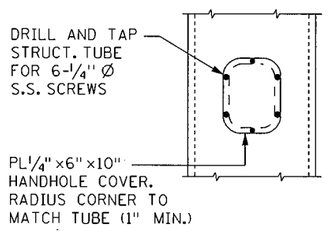

HANDHOLE & COVER PLATE DETAIL

(TYPE 'E' POSTS)

△ = FOR TYPE 'E' POST ONLY: LOCATE 45° AWAY FROM TRAFFIC. 10" x 6" x 1/2" x 0'-2" STRUCTURAL TUBE OR EQUAL W/ 1/4" RUBBER GASKET.

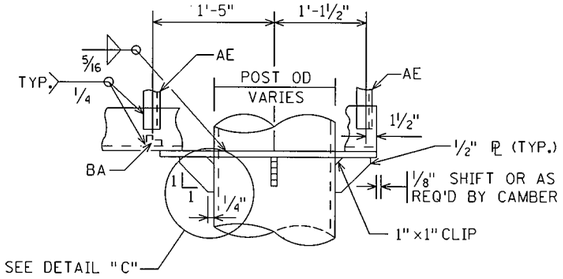

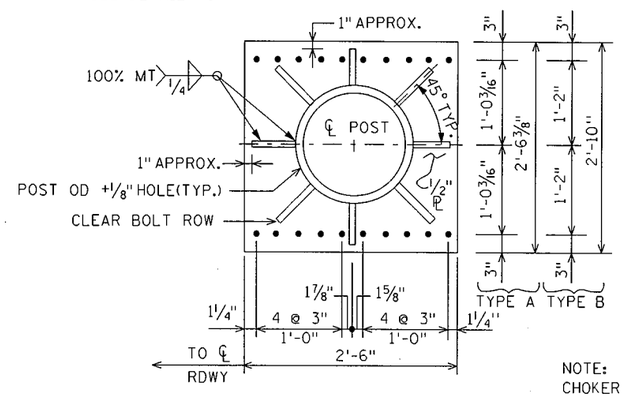

CANTILEVER TRUSS

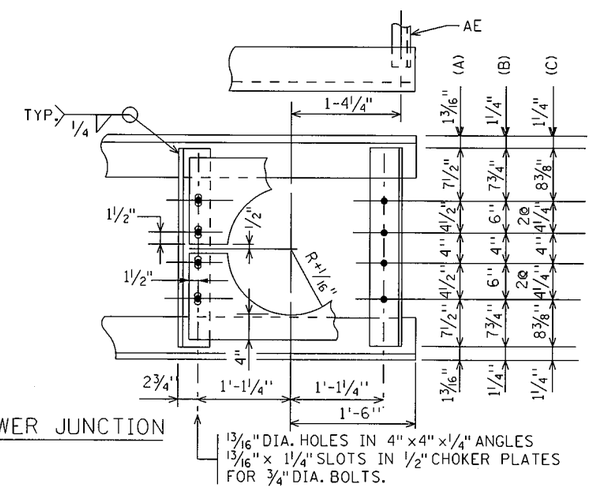

LOWER JUNCTION

SIMPLE TRUSS

NOTE:
CHOKER PLATES AND HANDHOLE COVERS SHALL BE GALVANIZED SEPARATELY.

STANDARD OVERHEAD SIGN SUPPORTS
INTERIM DESIGN B

TRUSS/POST CONNECTION
&
BASEPLATES

DRAWING ST-4

S.P.179-020-031 S.P.019-605-028

STATE PROJ. NO. 1901-148 (TH 13) SHEET NO. ST43 OF ST48 SHEETS

PLOTTED/REVISED: 6/11/2012
DISTRICT #: METRO
IPLOT NAME: ST-4
PATH & FILENAME: IP_PWP:d1432276v_1901-148_ SIGNING TYPICALS.dgn

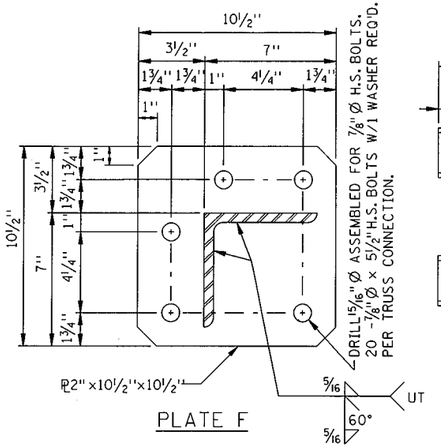

PLATE F

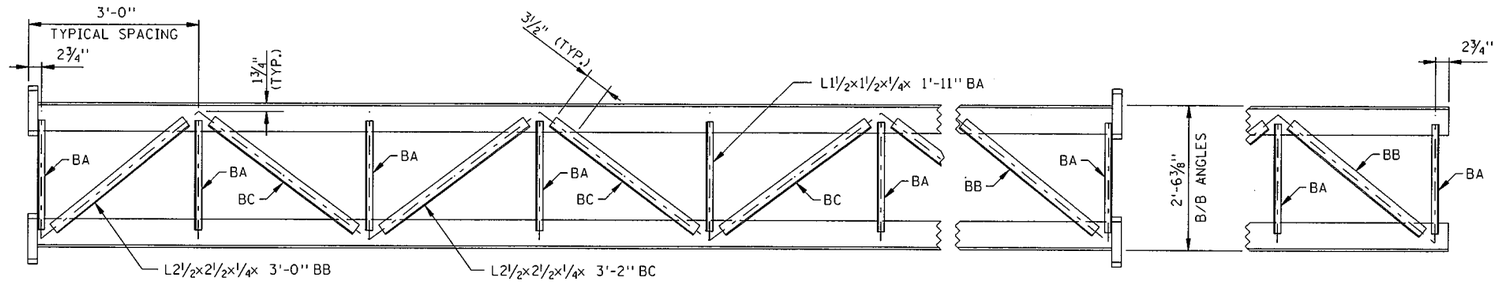

TOP VIEW

TOP VIEW

NOTES:

TRUSS SECTIONS SHALL BE MADE IN MULTIPLES OF 6'-0". EXCEPT THAT THE BRACING PANEL NEAREST EACH POST MAY VARY TO MAKE UP THE NEEDED SECTION LENGTH. WELDED CHORD SPLICES ARE NOT PERMITTED EXCEPT IN CANTILEVER TRUSSES AS NOTED BELOW.

CANTILEVER TRUSSES SHALL BE SUPPLIED AS A SINGLE UNIT WHENEVER POSSIBLE. WHEN CANTILEVER TRUSS LENGTH EXCEEDS 40'-0" CHORDS MAY BE SPLICED, AS SHOWN, IN THE END BRACING PANEL ONLY. CHORD SPLICE WELD SHALL BE COMPLETE PENETRATION, WITH 100% UT AND MT TESTING PER 2471.3M.

UNLESS OTHERWISE SHOWN, ALL WELDS SHALL BE ¼" FILLET WELDS ALL AROUND.

BOLTED SPLICES SHALL NOT BE LOCATED BEHIND CMS SIGNS.

PROVIDE 2- 1/16" BRASS, STAINLESS STEEL OR GALVANIZED STEEL SHIMS AT EACH FLANGE TO BRING TRUSS INTO CORRECT CAMBER AND ALIGNMENT.

TRUSSES SHALL BE SHOP ASSEMBLED AND MATCH MARKED.

ALL VIEWS OF THE TRUSSES ARE DRAWN FROM THE INSIDE OF THE TRUSS LOOKING OUT.

SEE DRAWING ST-4 FOR POST CONNECTION DETAILS.

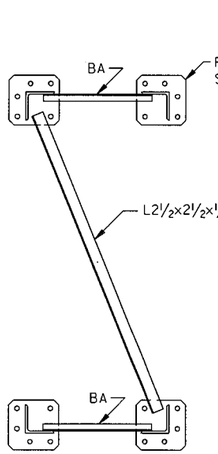

SECTION A-A

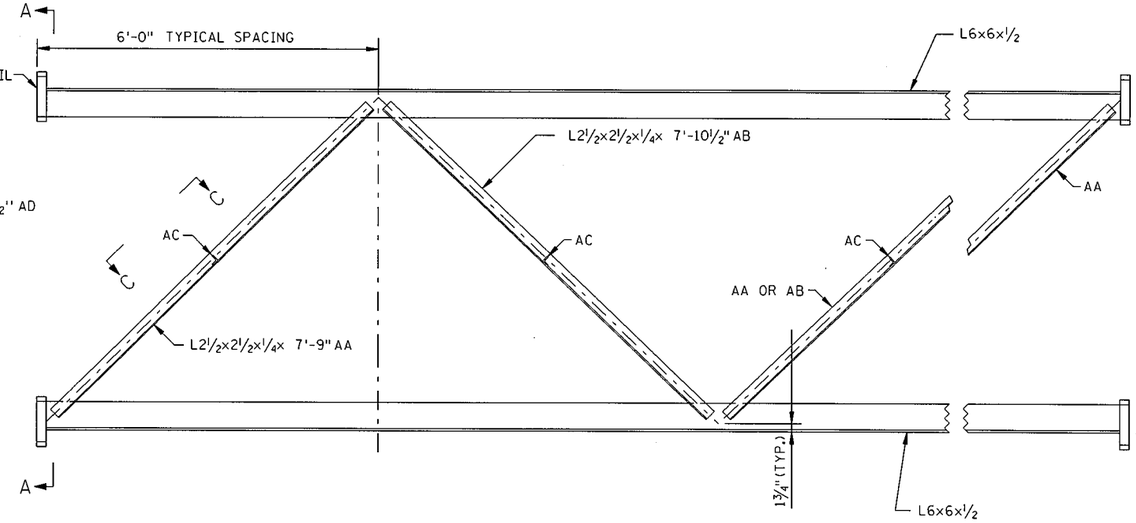

ELEVATION

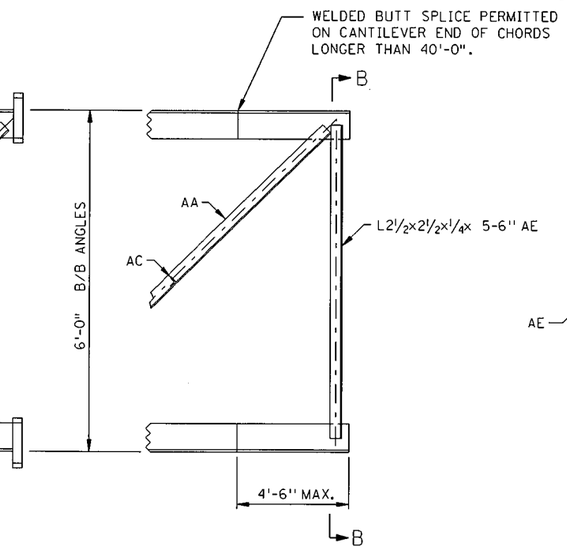

ELEVATION

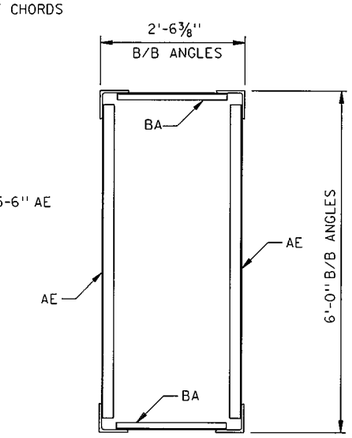

SECTION B-B

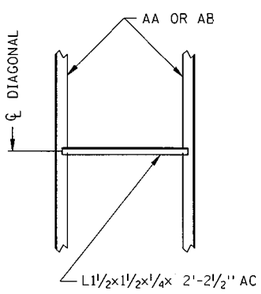

SECTION C-C

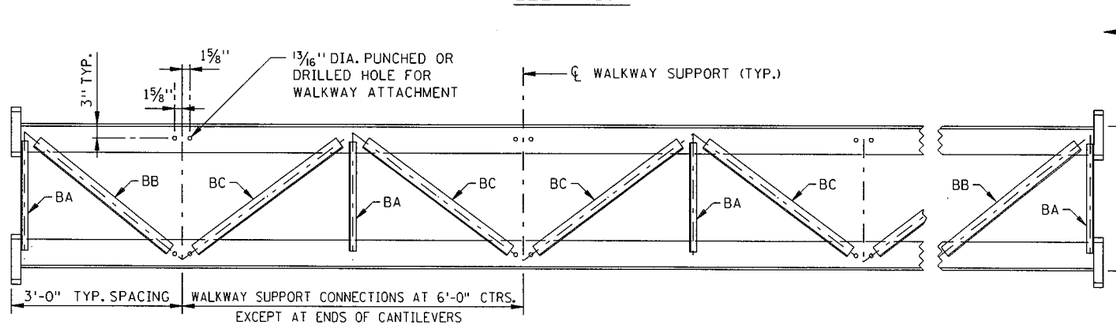

BOTTOM VIEW

SIMPLE SPAN

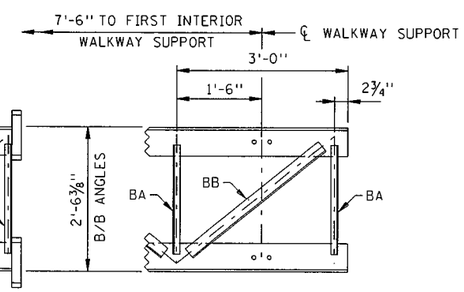

BOTTOM VIEW

CANTILEVER END

NOTE:
THE BOTTOM VIEW IS DETAILED TO PROVIDE FOR WALKWAY ATTACHMENT. WHERE THE WALKWAY IS OMITTED, PROVIDE STRUT BA AS INDICATED IN THE TOP VIEW.

S.P.179-020-031 S.P.019-605-028

DETAILS SHOWN ARE FOR THE FREE ENDS OF THE CANTILEVER SPANS. ALL OTHER DETAILS FOR CANTILEVER TRUSSES SHALL BE AS SHOWN FOR THE SIMPLE SPANS.

STANDARD OVERHEAD SIGN SUPPORTS
INTERIM DESIGN B

SIGN TRUSS DETAILS
TRUSS TYPE A

DRAWING ST-5

STATE PROJ. NO. 1901-148 (TH 13) SHEET NO. ST44 OF ST48 SHEETS

PLOTTED/REVISED: 6/11/2012
DISTRICT #: METRO
IPLOT NAME: ST-5
PATH & FILENAME: IP_PWP:d1432276V:J901-148_ SIGNING TYPICALS.dgn

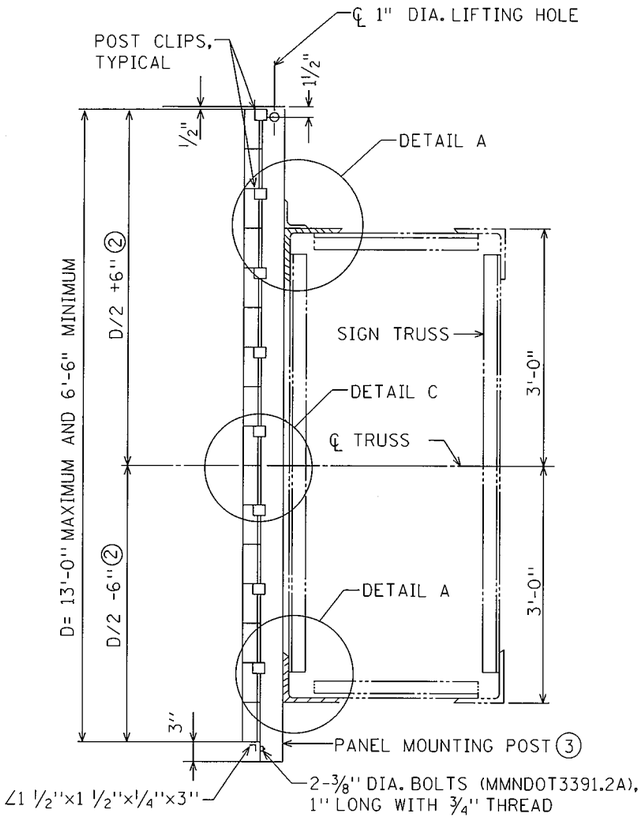

SECTION A-A

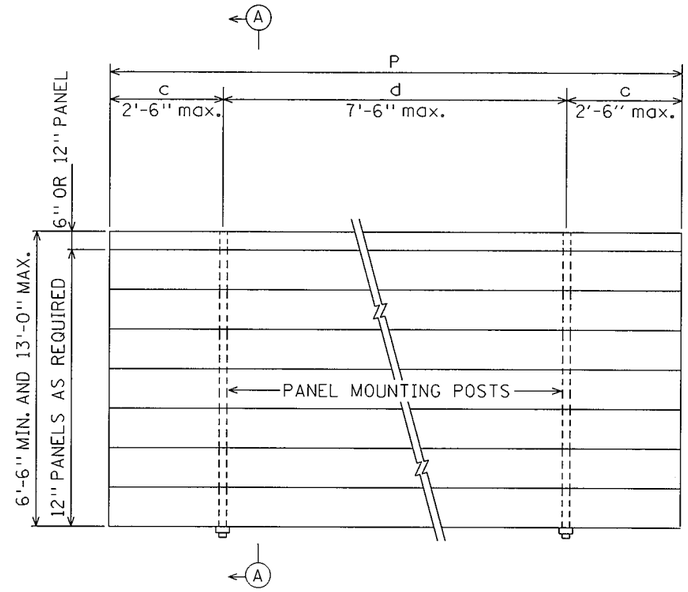

PANEL MOUNTING POST	
NO. OF POSTS	
2	P=144" OR LESS, c=.207P, d=.586P
3	P=150" THRU 204", c=.145P, d=.355P
4	P=210" THRU 276", c=.107P, d=.262P
5	P=282" THRU 348", c=.084P, d=.208P
6	P=354" THRU 420", c=.070P, d=.172P
7	P=426" THRU 492", c=.059P, d=.147P
POST SPACING MAY BE ADJUSTED AS REQUIRED IF CONFLICT WITH TRUSS DETAILS IS ENCOUNTERED.	

SIGN PANEL ELEVATION

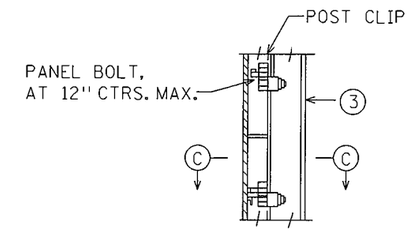

DETAIL C

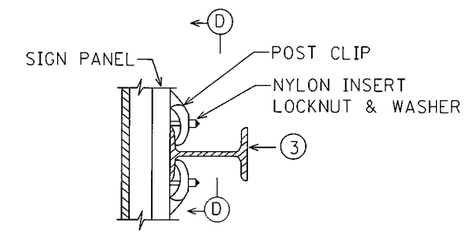

SECTION C

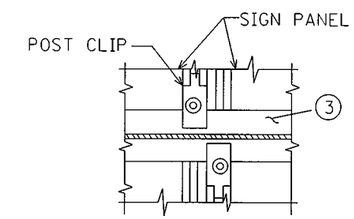

SECTION D-D

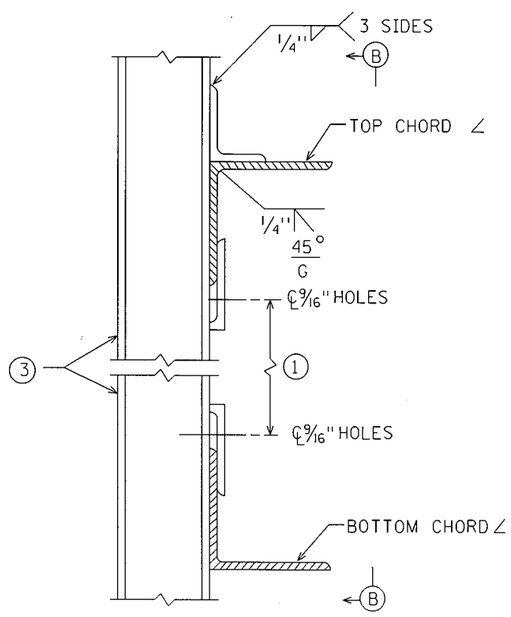

DETAIL A

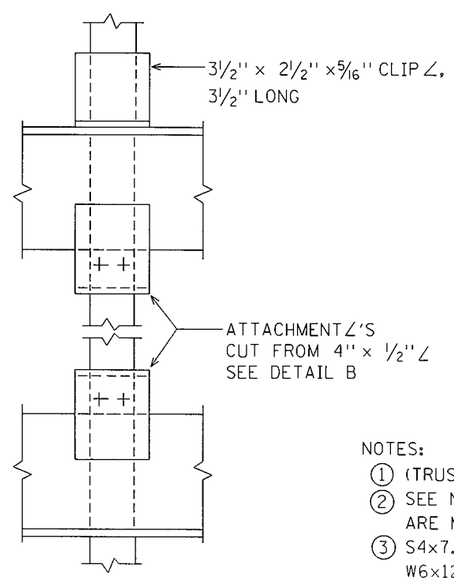

VIEW B-B

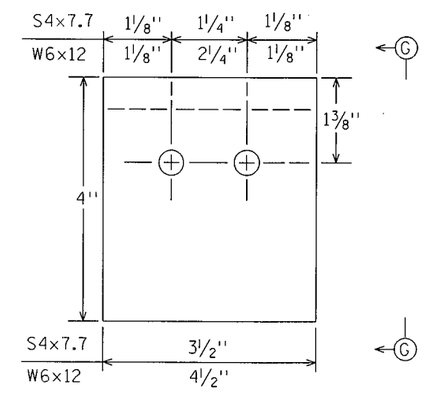

DETAIL B

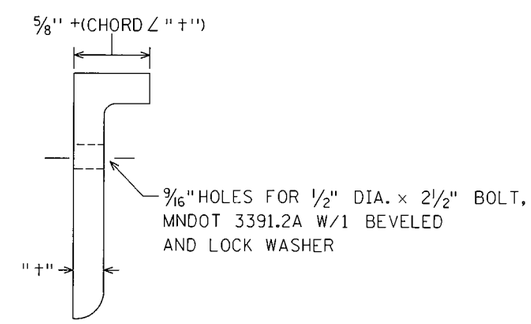

VIEW G-G

NOTES:

① (TRUSS DEPTH)-(TOP & BOTTOM CHORD ∠ LEGS)-1¼"

② SEE NOTE 1 ON ST-1 WHEN STANDARD PANELS AND CMS ARE MOUNTED ON THE SAME SPAN

③ S4×7.7 FOR SIGN HEIGHTS ≤ 11'-0"
W6×12 FOR SIGN HEIGHTS OVER 11'-0"

S.P.179-020-031 S.P.019-605-028

STANDARD OVERHEAD SIGN SUPPORTS
INTERIM DESIGN B

SIGN PANEL AND PANEL MOUNTING POST DETAILS

DRAWING ST-10

STATE PROJ. NO. 1901-148 (TH 13) SHEET NO. ST45 OF ST48 SHEETS

REV. 12-5-2011

PLOTTED/REVISED: 6/11/2012
DISTRICT : METRO
IPLOT NAME: ST-10
PATH & FILENAME: IP_PWP:d1432276V_1901-148_ SIGNING TYPICALS.dgn

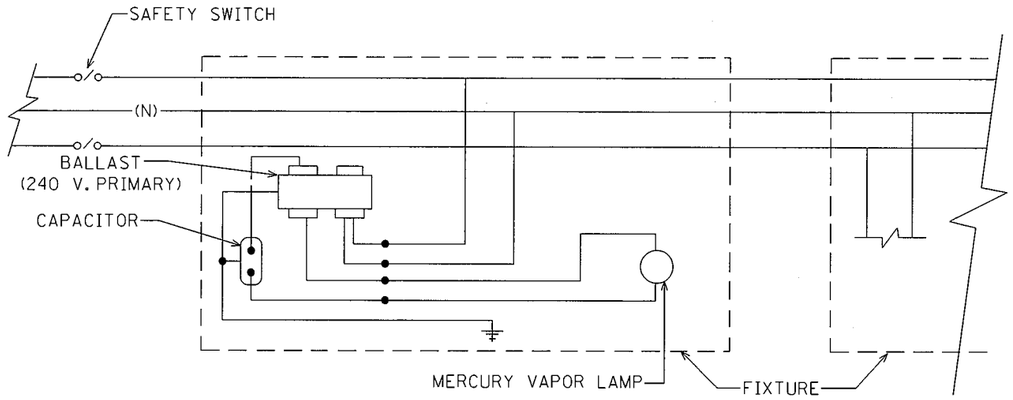

240/480 V. CIRCUIT

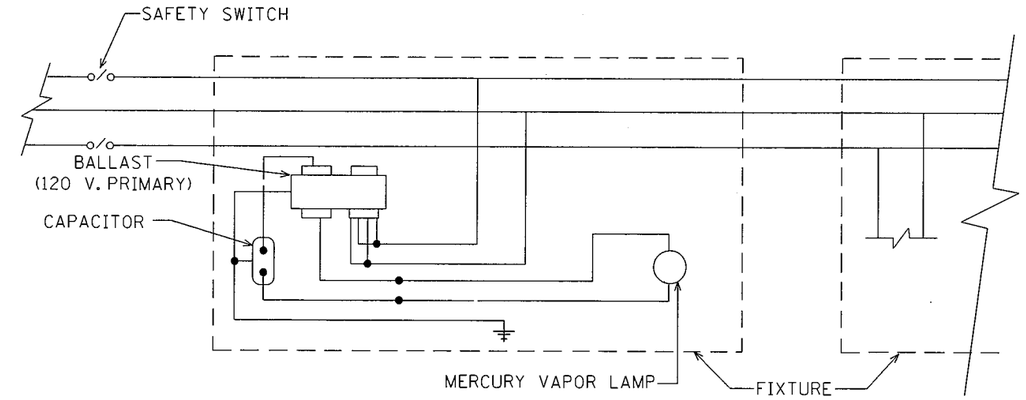

120/240 V. CIRCUIT

TYPICAL CIRCUIT DIAGRAMS

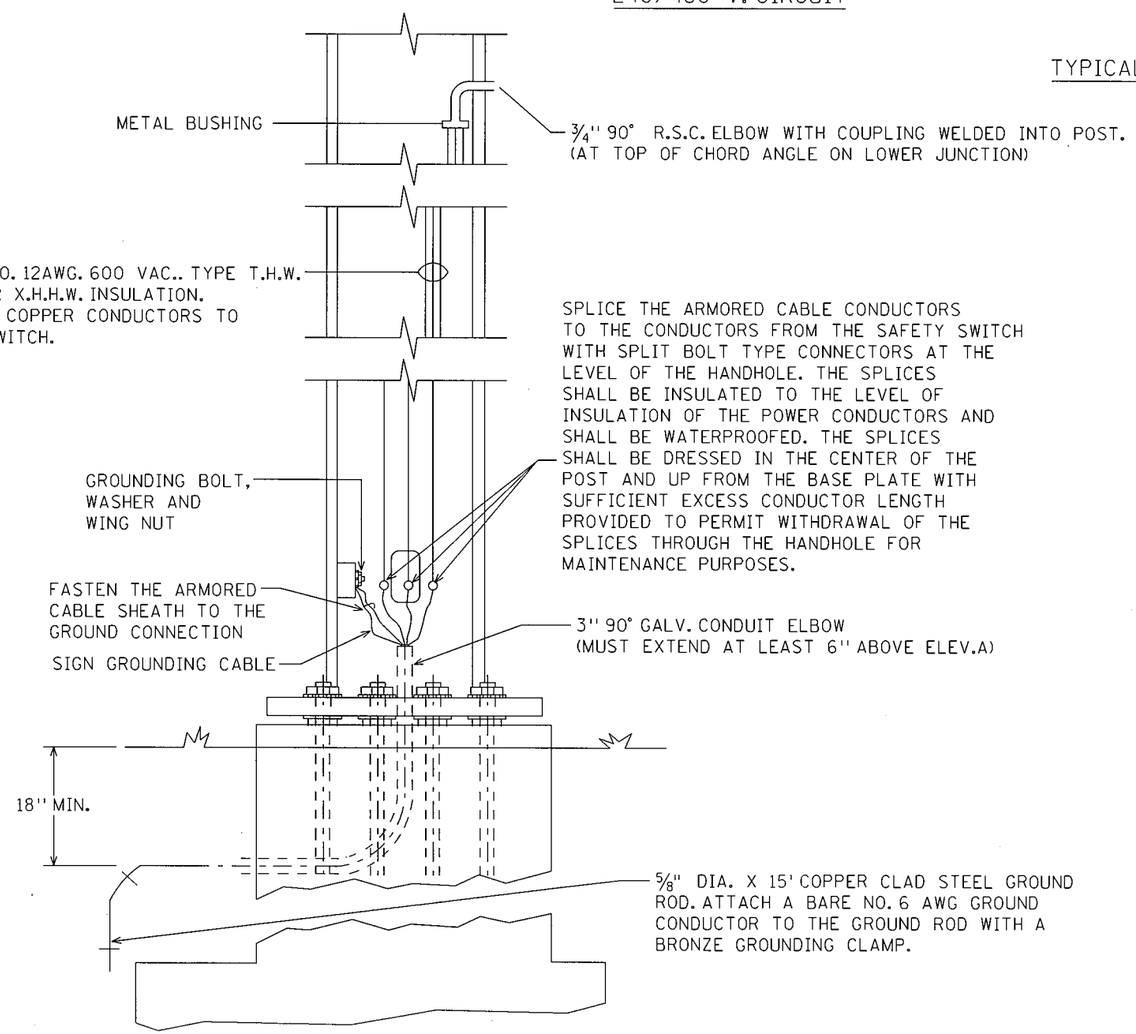

SIGN BASE DETAIL

ELECTRICAL NOTES:

1. WHEN SIGN LIGHTING SYSTEMS HAVE BEEN COMPLETED, THE CONTRACTOR SHALL, WITHOUT FURTHER COMPENSATION, CONDUCT BURNING AND RESISTANCE TESTS FOR FINAL ACCEPTANCE. THE RESISTANCE TO GROUND OF EACH UNGROUNDED CONDUCTOR SHALL BE NOT LESS THAN 8 MEGOHMS.
2. ALL FITTINGS, HUBS, UNIONS, BUSHINGS, ETC. SHALL BE SUPPLIED AS PART OF CONDUIT, CONDUIT ENTERING SIGN POSTS SHALL HAVE INSULATED GROUNDING BUSHINGS INSTALLED BEFORE PULLING WIRE.
3. CONDUIT ON STRUCTURE SHALL BE SURFACED MOUNTED, STRAPPED AT EVERY ANGLE BRACE WITH U-BOLT TYPE CLAMPS.
4. SUCCESSIVE LIGHTING FIXTURES SHALL BE CONNECTED ON ALTERNATE SIDES OF THE 3-WIRE CIRCUIT.
5. THE CABLE SHEATH SHALL EXTEND AT LEAST 4" ABOVE THE TOP OF THE CONDUIT END AND THE TAPE ARMOR OF ARMORED CABLE SHALL BE CONNECTED TO THE GROUNDING BOLT IN THE SIGN POSTS.
6. WIRING FROM THE SAFETY SWITCH TO LIGHTING FIXTURES SHALL BE 1/C NO. 12 AWG AND SHALL BE RUN IN 3/4" R.S.C. ALL SPLICING SHALL BE ACCOMPLISHED WITH A WIRE NUT AND WATERPROOF COATING. ALL CONDUIT CONNECTIONS SHALL BE RAIN TIGHT.

STANDARD OVERHEAD SIGN SUPPORTS
INTERIM DESIGN B

ELECTRICAL DETAILS

DRAWING ST-12

S.P.179-020-031 S.P.019-605-028

STATE PROJ. NO. 1901-148 (TH 13) SHEET NO. ST46 OF ST48 SHEETS

REV. 4-9-2012

PLOTTED/REVISED: 6/11/2012
DISTRICT •: METRO
IPLOT NAME: ST-12
PATH & FILENAME: IP_PWP:d1432276_1901-148_ SIGNING TYPICALS.dgn

PLOTTED/REVISED: 7/27/2012

OH 13-006

W.B. TH 13

STA. 705+25

QUANTITIES

	DESIGN	FINAL
POST STEEL	3566 LBS	
TRUSS STEEL	3752 LBS	
WALKWAY SUPPORT STEEL	0 LBS	
WALKWAY GRATING STEEL	0 LBS	
PANEL MOUNTING POST STEEL	246 LBS	
CONCRETE (SPREAD) FOOTING	11.5 CU YDS	

NOTE: 1. LOW STEEL IS BOTTOM OF PANEL MOUNTING POSTS ON THE TALLEST PANEL.

2. STRUCTURE IS DESIGNED FOR FUTURE WALKWAY

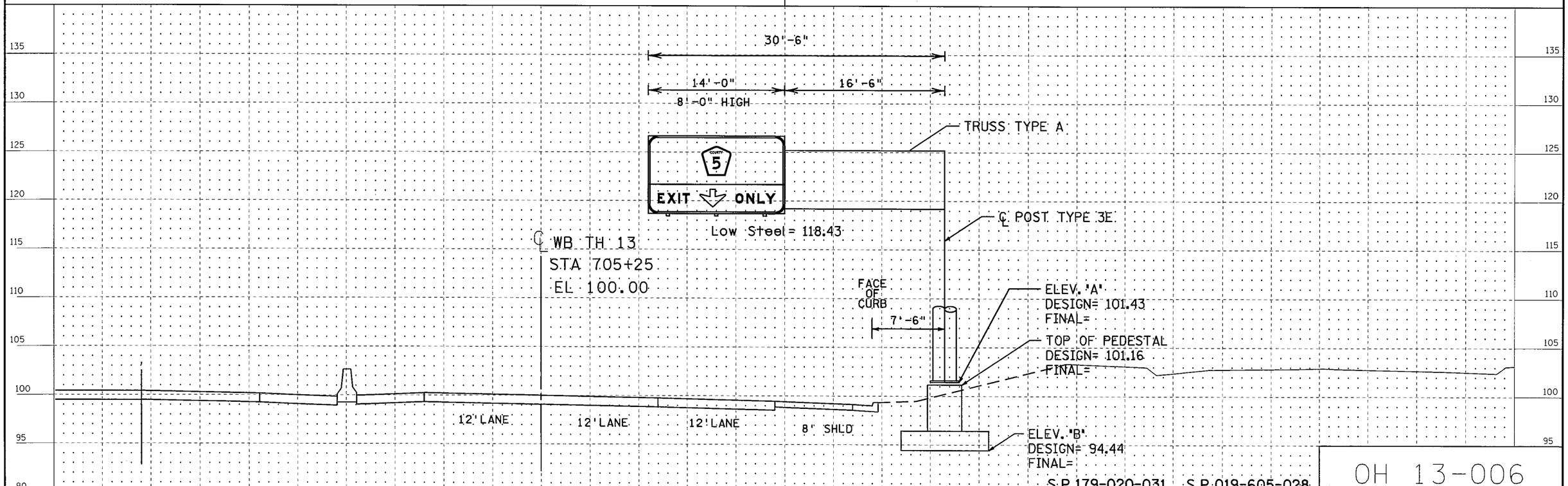

DISTRICT #: METRO
IPLOT NAME: _ST47
IP_PWPdl432276\1901-148 X sect.dgn

DRAWN BY: BB	CHECKED BY:	CERTIFIED BY Tiffany Kraft LICENSED PROFESSIONAL ENGINEER LIC. NO. 45918 DATE 7/27/2012	STATE PROJ. NO. 1901-148 (TH 13) SHEET NO. ST47 OF ST48 SHEETS

PLOTTED/REVISED: 7/27/2012

OH 13-007

W.B. TH 13

STA. 732+83

QUANTITIES

	DESIGN	FINAL
POST STEEL	4236 LBS	
TRUSS STEEL	3813 LBS	
WALKWAY SUPPORT STEEL	0 LBS	
WALKWAY GRATING STEEL	0 LBS	
PANEL MOUNTING POST STEEL	382 LBS	
CONCRETE (SHAFT) FOOTING	11.5 CU YDS	

NOTE: 1. LOW STEEL IS BOTTOM OF PANEL MOUNTING POSTS ON THE TALLEST PANEL.

2. STRUCTURE IS DESIGNED FOR FUTURE WALKWAY

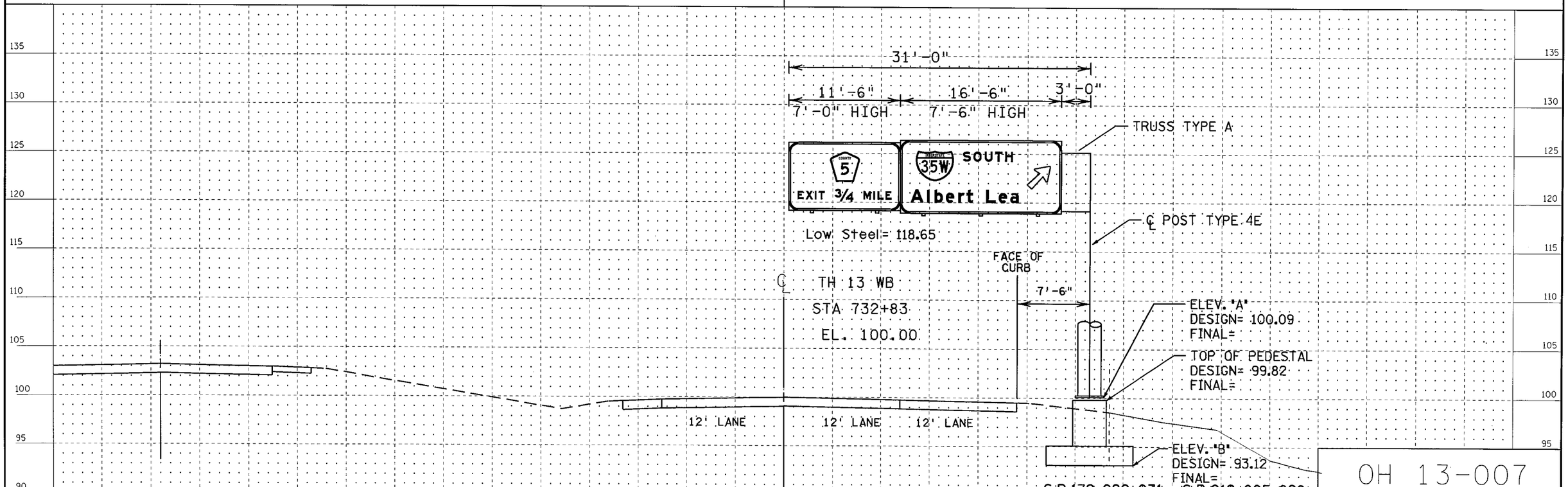

DISTRICT #:
IPLOT NAME: _ST48
PATH & FILENAME:

DRAWN BY: BB	CHECKED BY:	CERTIFIED BY Tiffany Kauth (LICENSED PROFESSIONAL ENGINEER) LIC. NO. 45918 DATE 7/27/2012	STATE PROJ. NO. 1901-148 (TH 13) SHEET NO. ST48 OF ST48 SHEETS

Koob1Tom MDROSFRWXD038 TMS
PLOTTED: 7/26/2012 1:00:49 PM

LEGEND OF SYMBOLS	
	CABLE TRAY
	CONDUIT - INPLACE
	CONDUIT - F&I
	CONDUIT FIBER ONLY - INPLACE
	CONDUIT FIBER ONLY - F&I
	DIRECT BURIED COMMUNICATION CABLE - INPLACE
	DIRECT BURIED COMMUNICATION CABLE - F&I
	DIRECT BURIED POWER CABLE - INPLACE
	DIRECT BURIED POWER CABLE - F&I
	INPLACE CONDUIT/CABLE HAS GPS COORDINATES
	LOOP DETECTOR- DESIGN (SPECIFY)
	FLASHER - INPLACE
	FLASHER - F&I
	FLASHING BEACON - F&I
	FOUNDATION INPLACE, GATE ARM - F&I
	FOUNDATION F&I, GATE ARM - F&I
	GATE ARM - INPLACE
	GUARDRAIL END TREATMENT (SPECIFY)
	GUARDRAIL (PLATE BEAM) - (SPECIFY)
	HANDHOLE - INPLACE
	HANDHOLE - F&I
	JUNCTION BOX OR CONDULET - INPLACE
	JUNCTION BOX OR CONDULET - F&I
	OVERHEAD SIGN - INPLACE
	OVERHEAD SIGN - F&I
	CABINET (SPECIFY) - INPLACE
	CABINET (SPECIFY) - F&I
	PEDESTAL - INPLACE
	PEDESTAL - F&I

LEGEND OF SYMBOLS	
	RAMP CONTROL SIGNAL (DESIGN ONE-WAY) - INPLACE
	RAMP CONTROL SIGNAL (DESIGN ONE-WAY) - F&I
	RAMP CONTROL SIGNAL (DESIGN TWO-WAY) - INPLACE
	RAMP CONTROL SIGNAL (DESIGN TWO-WAY) - F&I
	RAMP CONTROL SIGNAL (DESIGN ONE-WAY)(SCREW IN BASE) - INPLACE
	RAMP CONTROL SIGNAL (DESIGN ONE-WAY)(SCREW IN BASE) - F&I
	RAMP CONTROL SIGNAL (DESIGN TWO-WAY)(SCREW IN BASE) - INPLACE
	RAMP CONTROL SIGNAL (DESIGN TWO-WAY)(SCREW IN BASE) - F&I
	SHELTER (TMS) - INPLACE
	SHELTER (TMS) - F&I
	SIGN (TYPE A OR D) - (SPECIFY)
	SIGN (TYPE C) - (SPECIFY)
	SIGN (TYPE DMS) - (SPECIFY)
	SIGNAL FACE - INPLACE
	SIGNAL FACE - F&I
	SPLICE CABINET - (SPECIFY)
	SPLICE VAULT (FIBER OPTIC) - (SPECIFY)
	TELEVISION CAMERA (CCTV) - (SPECIFY)
	WOOD POLE - F&I
	WOOD POLE - INPLACE
	WOOD POLE F&I, SERVICE INSTALLATION - F&I
	WOOD POLE INPLACE, SERVICE INSTALLATION - F&I
	WOOD POLE INPLACE, SERVICE INSTALLATION - INPLACE
	FIBER PATCHING SHELTER - F&I
	OUTDOOR FIBER SPLICE ENCLOSURE - F&I
	PULL VAULT
	ELECTRICAL SERVICE
	TRANSFORMER
	SIGNAL CABINET

GENERAL NOTES:

TURF ESTABLISHMENT SHALL BE CONSIDERED INCIDENTAL, APPLIED TO ALL DISTURBED AREAS, IN ACCORDANCE WITH MN/DOT 2575.1, 2575.2 AND 2575.3

SZ	TABULATION OF ESTIMATED QUANTITIES			
ITEM NO.	ITEM	NOTES	UNIT	ESTIMATED INTERCHANGE QUANTITES
2011	GPS ASBUILT		LUMP SUM	1
2104	REMOVE HANDHOLE		EACH	1
2104	REMOVE FOUNDATION	1	EACH	2
2104	REMOVE SERVICE INSTALLATION		EACH	1
2104	SALVAGE FIBER OPTIC VAULT	2 5	EACH	1
2104	SALVAGE CABINET	5	EACH	1
2104	SALVAGE SERVICE CABINET	5	EACH	1
2104	SALVAGE DMS	3 5	EACH	1
2104	REMOVE CABLES		LUMP SUM	1
2550	CABINET FOUNDATION		EACH	1
2550	HANDHOLE TYPE-PVC METAL COVER		EACH	1
2550	FIBEROPTIC SPLICE VAULT		EACH	1
2550	OUTDOOR FIBER SPLICE ENCLOSURE		EACH	1
2550	BURIED CABLE SIGN		EACH	25
2550	1.5" NON-METALLIC CONDUIT		LIN FT	8700
2550	2" NON-METALLIC CONDUIT		LIN FT	100
2550	POWER CABLE 1 CONDUCTOR NO 6		LIN FT	150
2550	POWER CABLE 3 CONDUCTOR NO 8		LIN FT	120
2550	CAT 6 CABLE		LIN FT	120
2550	INSTALL CABINET	4	EACH	2
2550	TEMPORARY COMMUNICATION SYSTEM		LUMP SUM	1
2550	FIBER OPTIC CABLE TESTING		LUMP SUM	1
2550	FIBER OPTIC PIGTAIL TERMINATION		EACH	3
2550	FIBER OPTIC CABLE SPLICING		EACH	2
2550	INSTALL FIBER OPTIC VAULT	2	EACH	1
2550	INSTALL DMS POST MOUNTED	3	EACH	1
2550	1.5" BORED CONDUIT		LIN FT	450
2550	4" BORED CONDUIT		LIN FT	70
2550	ARMORED FIBER OPTIC PIGTAIL CABLE 6SM		LIN FT	2000
2550	ARMORED FIBER OPTIC PIGTAIL CABLE 12SM		LIN FT	800
2550	REROUTE CABLE		LIN FT	200
2550	FIBER OPTIC TRUNK CABLE 36SM		LIN FT	6600
2564	STRUCT STEEL-POSTS FOR TYPE A SIGNS		POUND	812

1. CONSISTS OF 1-334 CABINET FOUNDATION AND 1-DMS POST MOUNTED FOUNDATION
2. INCLUDES OUTDOOR SPLICE ENCLOSURE, VAULT MARKER AND VAULT DRAINAGE COMPONENTS
3. 10' BY 10' POST MOUNTED STYLE (INCLUDES STRUCTURAL STEEL)
4. CONSISTS OF 1-334 CABINET AND 1-SERVICE CABINET
5. TO BE INSTALLED ON THIS PROJECT

I HEREBY CERTIFY THAT SHEETS SZ1 THROUGH SZ23 OF THIS PLAN WERE PREPARED BY ME OR UNDER MY DIRECT SUPERVISION AND THAT I AM A DULY LICENSED PROFESSIONAL ENGINEER UNDER THE LAWS OF THE STATE OF MINNESOTA.

GEOFFREY M. PRELGO

DATE MAY 25, 2012 LIC. NO. 26530

DESIGNER TOM KOOB

TMS COMPONENTS

REV. NO.	DATE: / /
REV. NO.	DATE: / /

S.P. 179-020-031 S.P. 019-605-028
STATE PROJ. NO. 1901-148 (TH 13) SHEET NO. SZ1 OF SZ23 SHEETS

c:\projectwise\pw_working\koob1tom\d1341146\1901_164det.dgn

Koob1Tom MDROSFRWXD038 TMS
PLOTTED: 6/11/2012 10:18:59 AM

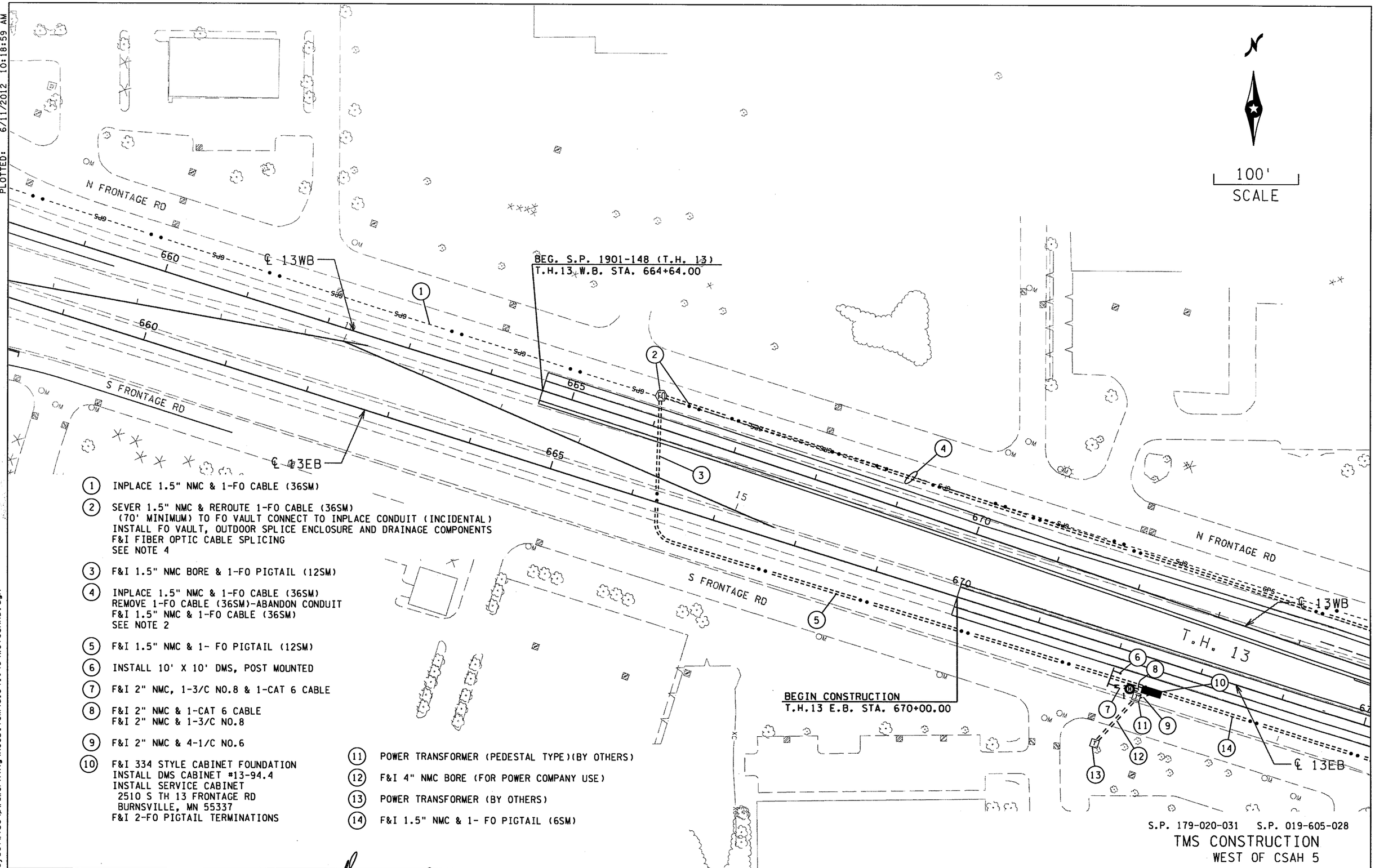

1. INPLACE 1.5" NMC & 1-FO CABLE (36SM)
2. SEVER 1.5" NMC & REROUTE 1-FO CABLE (36SM) (70' MINIMUM) TO FO VAULT CONNECT TO INPLACE CONDUIT (INCIDENTAL) INSTALL FO VAULT, OUTDOOR SPLICE ENCLOSURE AND DRAINAGE COMPONENTS F&I FIBER OPTIC CABLE SPLICING SEE NOTE 4
3. F&I 1.5" NMC BORE & 1-FO PIGTAIL (12SM)
4. INPLACE 1.5" NMC & 1-FO CABLE (36SM) REMOVE 1-FO CABLE (36SM)-ABANDON CONDUIT F&I 1.5" NMC & 1-FO CABLE (36SM) SEE NOTE 2
5. F&I 1.5" NMC & 1- FO PIGTAIL (12SM)
6. INSTALL 10' X 10' DMS, POST MOUNTED
7. F&I 2" NMC, 1-3/C NO.8 & 1-CAT 6 CABLE
8. F&I 2" NMC & 1-CAT 6 CABLE F&I 2" NMC & 1-3/C NO.8
9. F&I 2" NMC & 4-1/C NO.6
10. F&I 334 STYLE CABINET FOUNDATION INSTALL DMS CABINET #13-94.4 INSTALL SERVICE CABINET 2510 S TH 13 FRONTAGE RD BURNSVILLE, MN 55337 F&I 2-FO PIGTAIL TERMINATIONS
11. POWER TRANSFORMER (PEDESTAL TYPE)(BY OTHERS)
12. F&I 4" NMC BORE (FOR POWER COMPANY USE)
13. POWER TRANSFORMER (BY OTHERS)
14. F&I 1.5" NMC & 1- FO PIGTAIL (6SM)

S.P. 179-020-031 S.P. 019-605-028

TMS CONSTRUCTION
WEST OF CSAH 5

REV. NO.	DATE: / /
REV. NO.	DATE: / /

CERTIFIED BY _____ LICENSED PROFESSIONAL ENGINEER LIC.NO. 26530 MAY 25 2012

STATE PROJ. NO. 1901-148 (TH 13) SHEET NO. SZ2 OF SZ23 SHEETS

c:\projectwise\pw_working\koob1tom\d1341146\WofCSAH5.dgn

PLOTTED: 6/11/2012 10:28:16 AM Koobltom MDROSFRWXD038 TMS

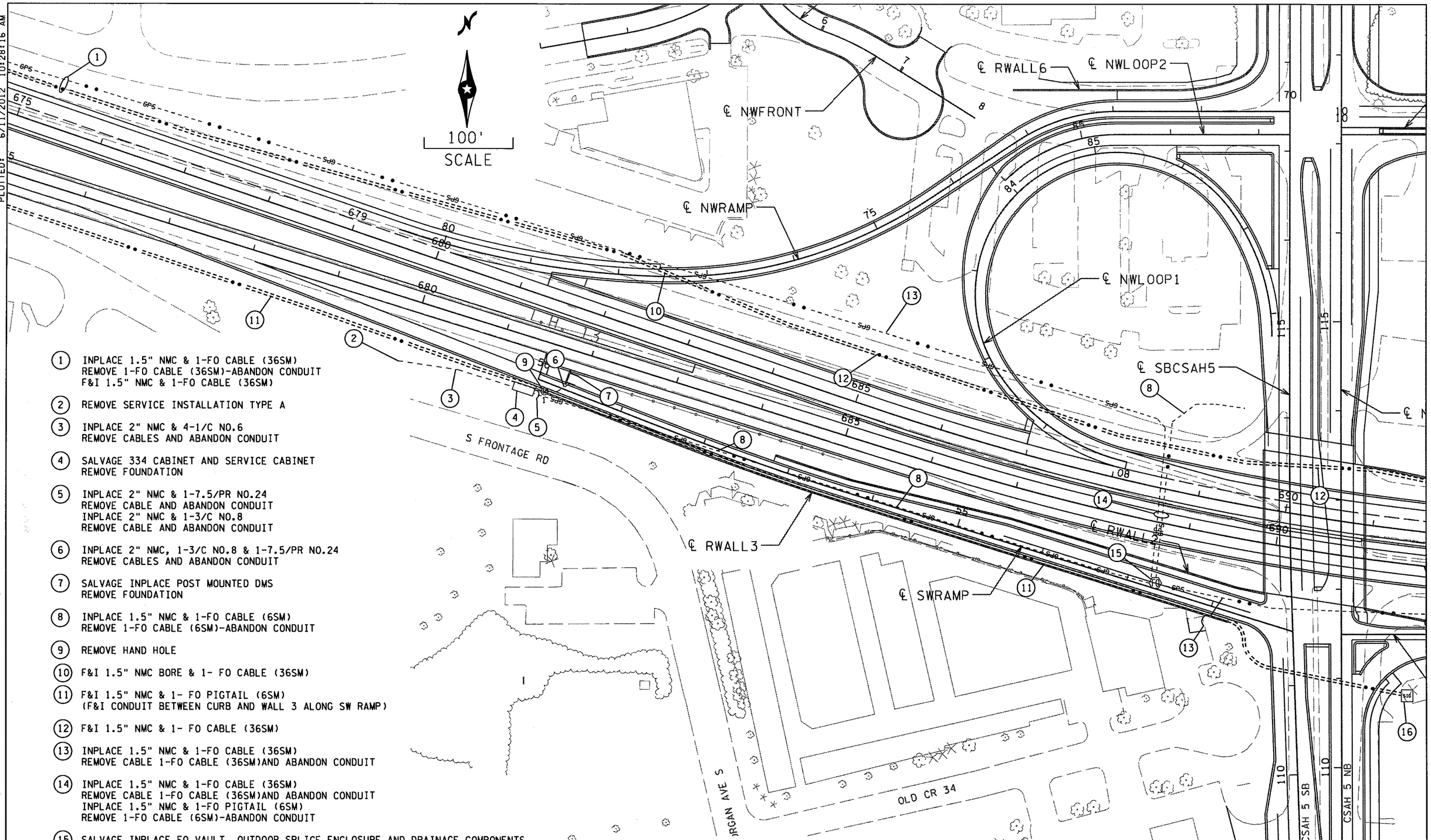

1. INPLACE 1.5" NMC & 1-FO CABLE (36SM)
   REMOVE 1-FO CABLE (36SM)-ABANDON CONDUIT
   F&I 1.5" NMC & 1-FO CABLE (36SM)
2. REMOVE SERVICE INSTALLATION TYPE A
3. INPLACE 2" NMC & 4-1/C NO.6
   REMOVE CABLES AND ABANDON CONDUIT
4. SALVAGE 334 CABINET AND SERVICE CABINET
   REMOVE FOUNDATION
5. INPLACE 2" NMC & 1-7.5/PR NO.24
   REMOVE CABLE AND ABANDON CONDUIT
   INPLACE 2" NMC & 1-3/C NO.8
   REMOVE CABLE AND ABANDON CONDUIT
6. INPLACE 2" NMC, 1-3/C NO.8 & 1-7.5/PR NO.24
   REMOVE CABLES AND ABANDON CONDUIT
7. SALVAGE INPLACE POST MOUNTED DMS
   REMOVE FOUNDATION
8. INPLACE 1.5" NMC & 1-FO CABLE (6SM)
   REMOVE 1-FO CABLE (6SM)-ABANDON CONDUIT
9. REMOVE HAND HOLE
10. F&I 1.5" NMC BORE & 1- FO CABLE (36SM)
11. F&I 1.5" NMC & 1- FO PIGTAIL (6SM)
    (F&I CONDUIT BETWEEN CURB AND WALL 3 ALONG SW RAMP)
12. F&I 1.5" NMC & 1- FO CABLE (36SM)
13. INPLACE 1.5" NMC & 1-FO CABLE (36SM)
    REMOVE CABLE 1-FO CABLE (36SM)AND ABANDON CONDUIT
14. INPLACE 1.5" NMC & 1-FO CABLE (36SM)
    REMOVE CABLE 1-FO CABLE (36SM)AND ABANDON CONDUIT
    INPLACE 1.5" NMC & 1-FO PIGTAIL (6SM)
    REMOVE 1-FO CABLE (6SM)-ABANDON CONDUIT
15. SALVAGE INPLACE FO VAULT, OUTDOOR SPLICE ENCLOSURE AND DRAINAGE COMPONENTS
16. PROPOSED SIGNAL CABINET LOCATION (SEE SIGNAL PLANS)
    F&I 1-FO PIGTAIL TERMINATION

NOTE: DO NOT ATTACH FO BURIED CABLE SIGNS TO RWALL 3
WITHOUT PROJECT ENGINEER'S APPROVAL.
F&I FO BURIED CABLES SIGNS AT ENDS OF WALL

S.P. 179-020-031 S.P. 019-605-028
TMS CONSTRUCTION
CSAH 5

REV. NO.	DATE: / /
REV. NO.	DATE: / /

CERTIFIED BY _____ LICENSED PROFESSIONAL ENGINEER LIC.NO. 26530 MAY 25 2012

STATE PROJ. NO. 1901-148 (TH 13) SHEET NO. SZ3 OF SZ23 SHEETS

c:\projectwise\pw_working\kooblitom\d1341146\WestsideCSAH5.dgn

PLOTTED: 5/16/2012 10:31:02 AM Kooblitom MDROSFRWXD038 TMS

c:\projectwise\pw_working\kooblitom\d1341146\Eastsidecsah5.dgn

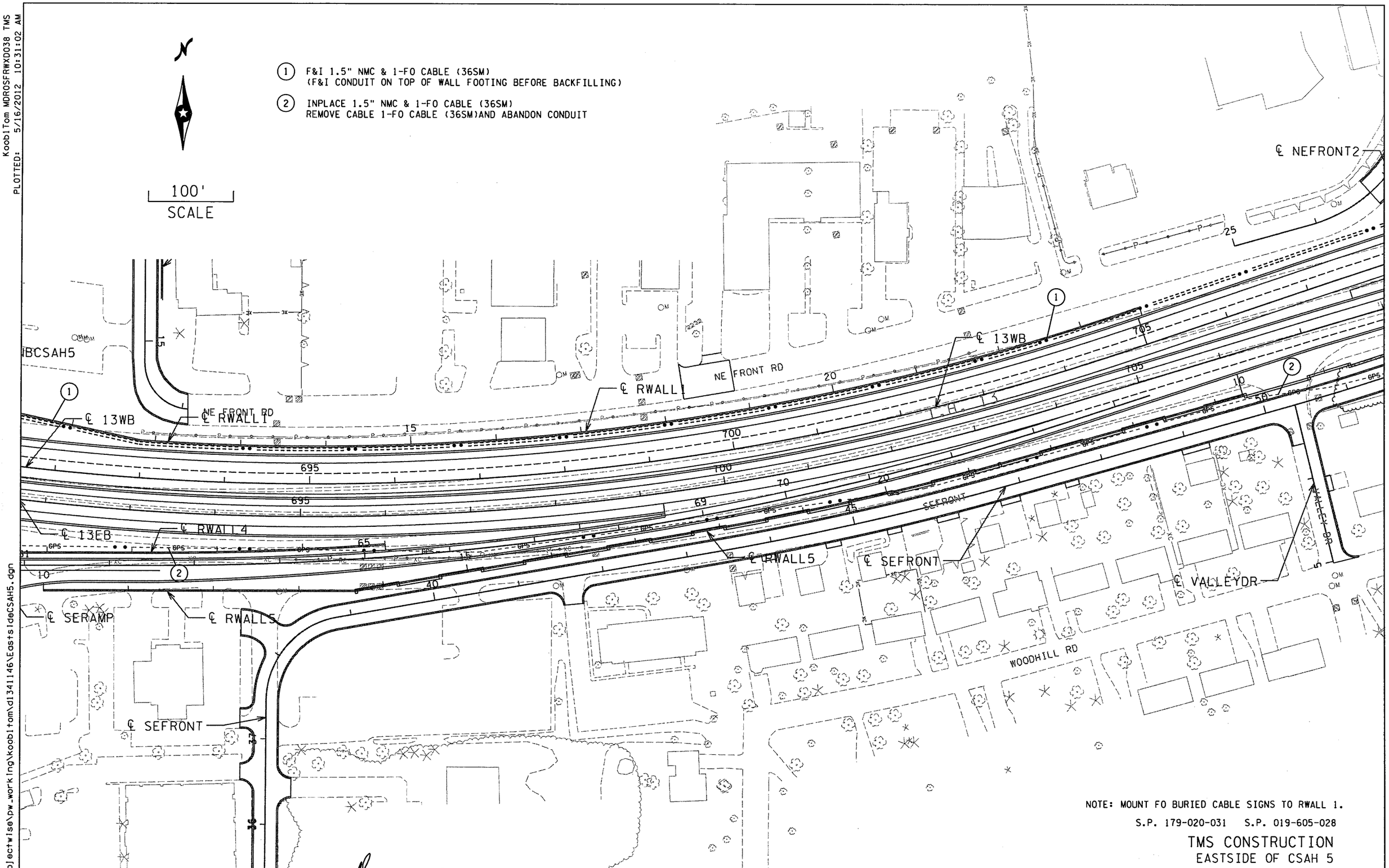

NOTE: MOUNT FO BURIED CABLE SIGNS TO RWALL 1.

S.P. 179-020-031 S.P. 019-605-028

TMS CONSTRUCTION
EASTSIDE OF CSAH 5

REV. NO.	DATE: / /
REV. NO.	DATE: / /

CERTIFIED BY LICENSED PROFESSIONAL ENGINEER LIC.NO. 26530 MAY 25 2012

STATE PROJ. NO. 1901-148 (TH 13) SHEET NO. SZ4 OF SZ23 SHEETS

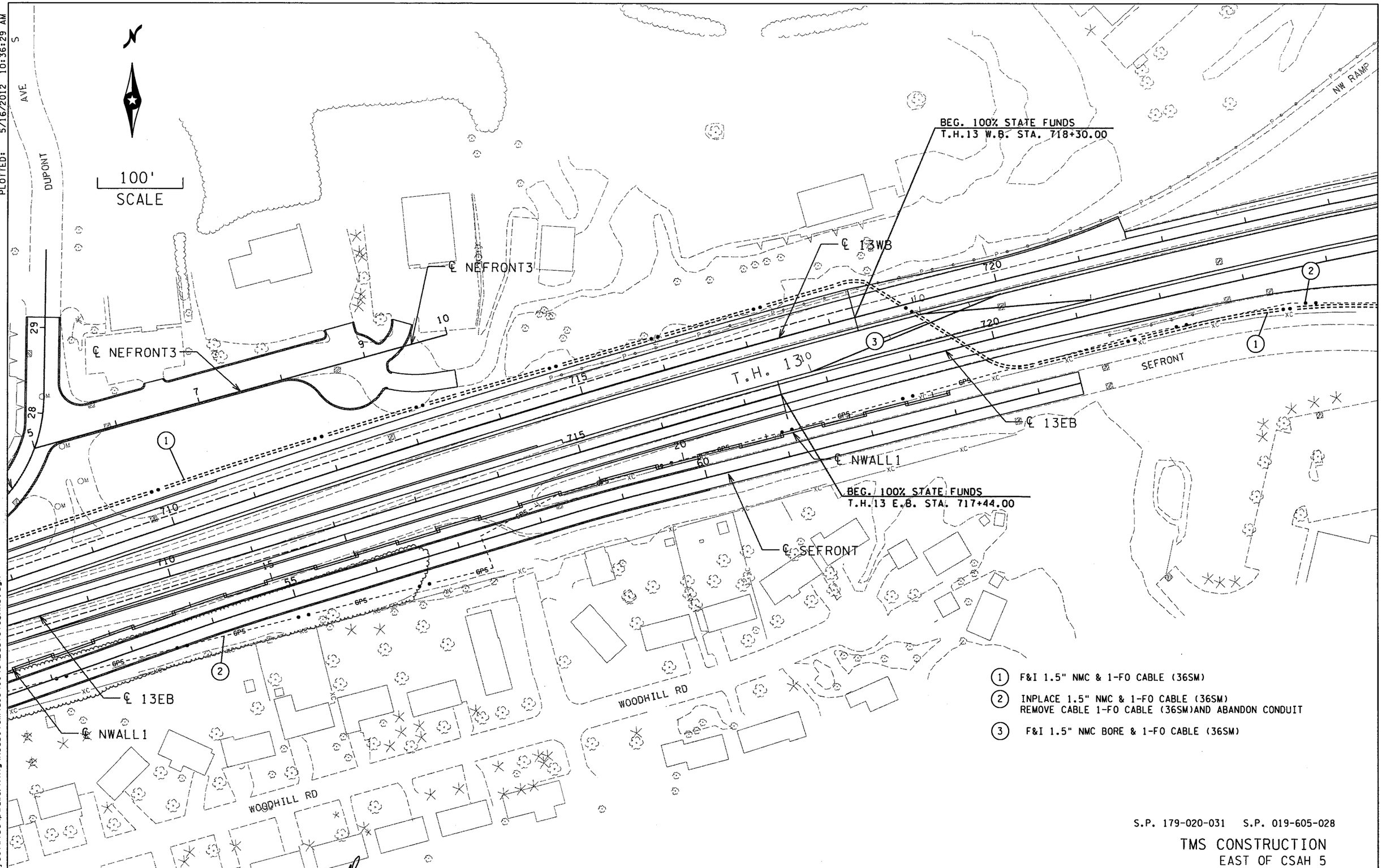

1. F&I 1.5" NMC & 1-FO CABLE (36SM)
2. INPLACE 1.5" NMC & 1-FO CABLE (36SM) REMOVE CABLE 1-FO CABLE (36SM)AND ABANDON CONDUIT
3. F&I 1.5" NMC BORE & 1-FO CABLE (36SM)

S.P. 179-020-031 S.P. 019-605-028

TMS CONSTRUCTION
EAST OF CSAH 5

REV. NO.	DATE: / /
REV. NO.	DATE: / /

CERTIFIED BY [signature] LICENSED PROFESSIONAL ENGINEER LIC.NO. 26530 MAY 25 2012

STATE PROJ. NO. 1901-148 (TH 13) SHEET NO. SZ5 OF SZ23 SHEETS

KoobiTom MDROSFRWXD038 TMS
PLOTTED: 5/16/2012 10:36:29 AM
c:\projectwise\pw_working\koobitom\d1341146\EastofCSAH5.dgn

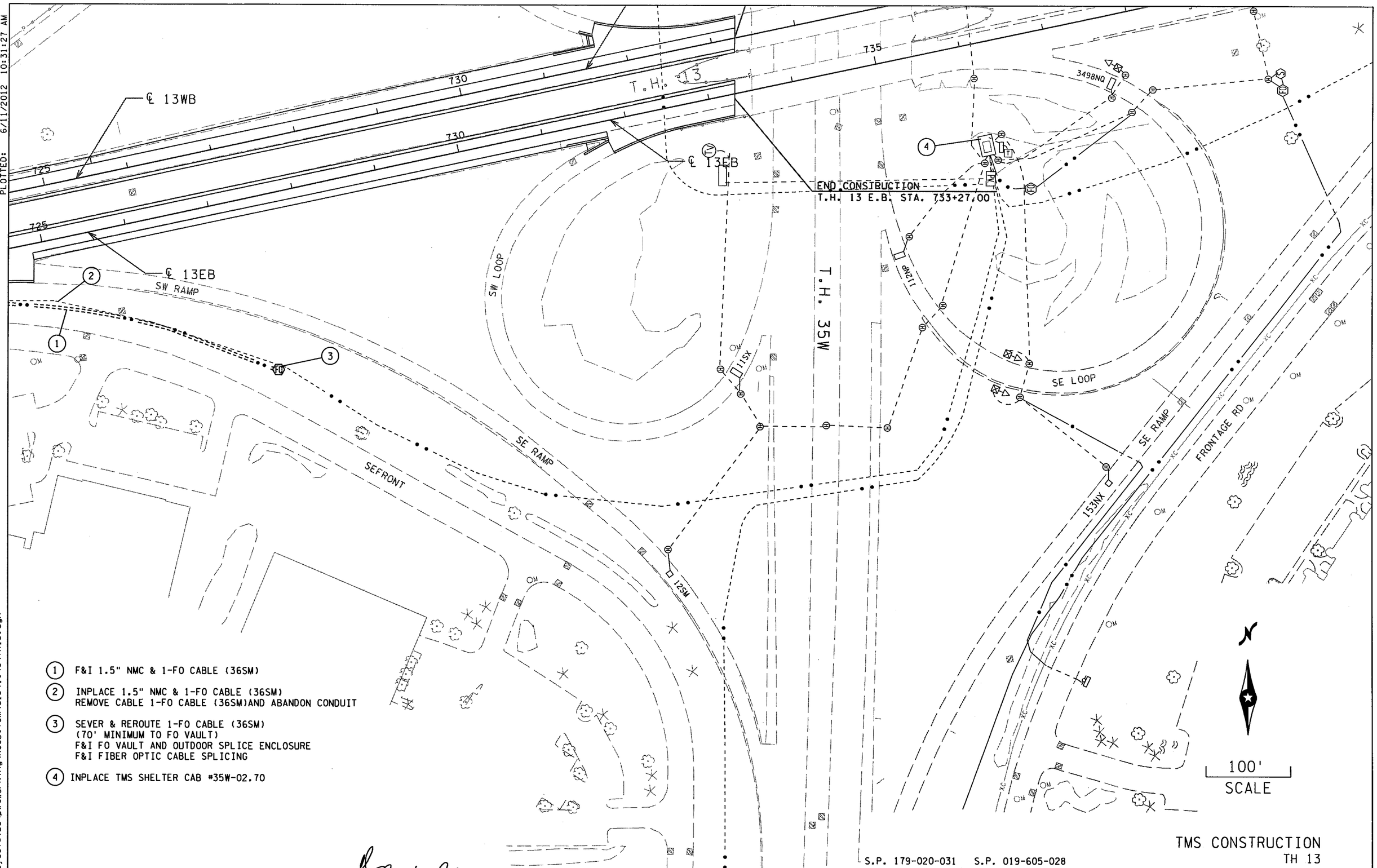

1. F&I 1.5" NMC & 1-FO CABLE (36SM)
2. INPLACE 1.5" NMC & 1-FO CABLE (36SM)
   REMOVE CABLE 1-FO CABLE (36SM)AND ABANDON CONDUIT
3. SEVER & REROUTE 1-FO CABLE (36SM)
   (70' MINIMUM TO FO VAULT)
   F&I FO VAULT AND OUTDOOR SPLICE ENCLOSURE
   F&I FIBER OPTIC CABLE SPLICING
4. INPLACE TMS SHELTER CAB #35W-02.70

S.P. 179-020-031 S.P. 019-605-028

TMS CONSTRUCTION
TH 13

REV. NO.	DATE: / /
REV. NO.	DATE: / /

CERTIFIED BY [signature] LICENSED PROFESSIONAL ENGINEER LIC.NO. 26530 MAY 25 2012

STATE PROJ. NO. 1901-148 (TH 13) SHEET NO. SZ6 OF SZ23 SHEETS

KoobiTom MDROSFRWXD038 TMS
PLOTTED: 6/11/2012 10:31:27 AM

c:\projectwise\pw_working\koobitom\d1341146\TH13.dgn

PLOTTED: 5/16/2012 10:11:49 AM KoobiTom MDROSFRWXD038 TMS

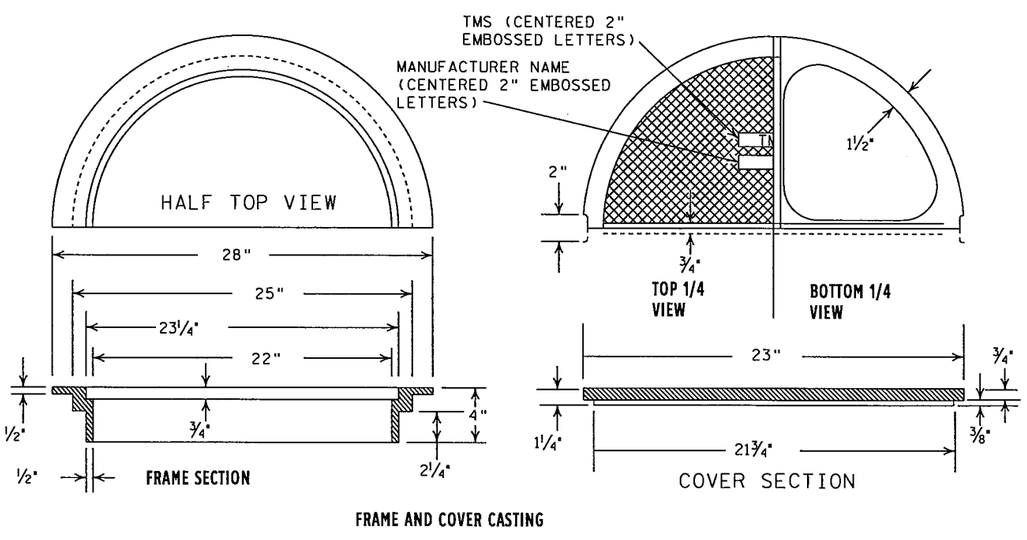

NOTE:
ALL CASTINGS ARE GRAY IRON PER MN/DOT SPEC. 3321 CLASS 35B

LIGHT DUTY METAL COVER

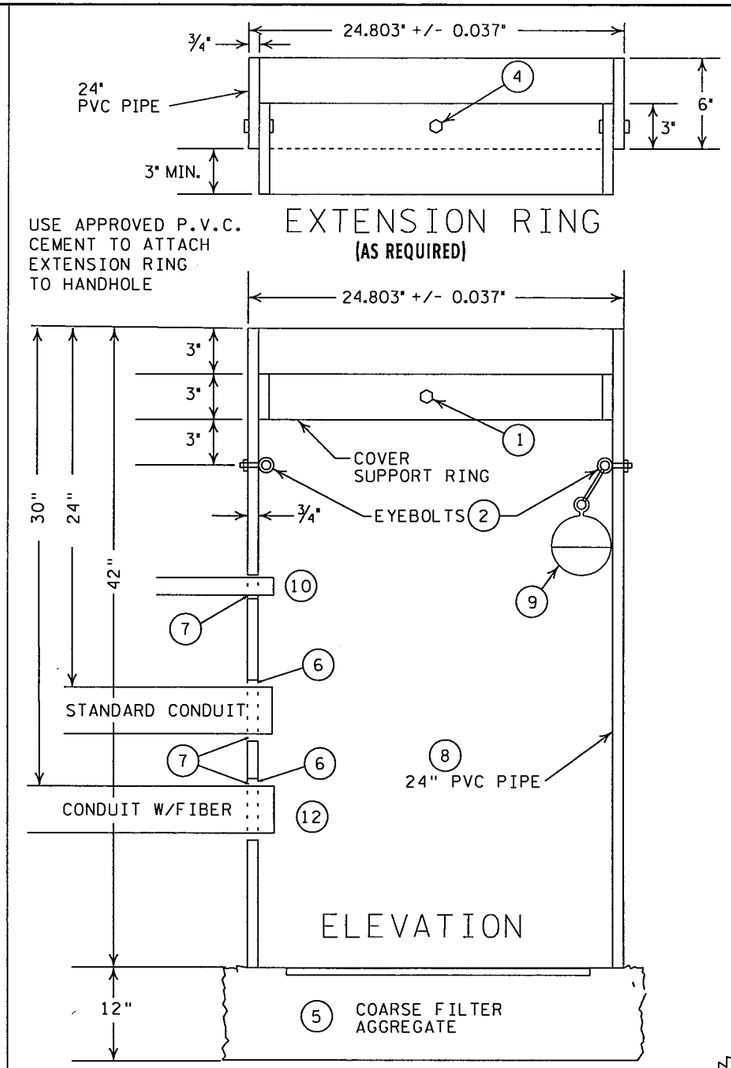

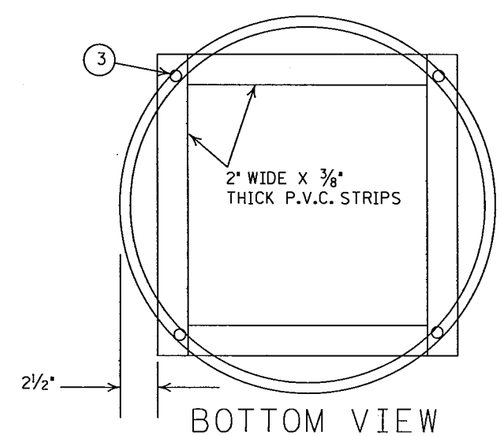

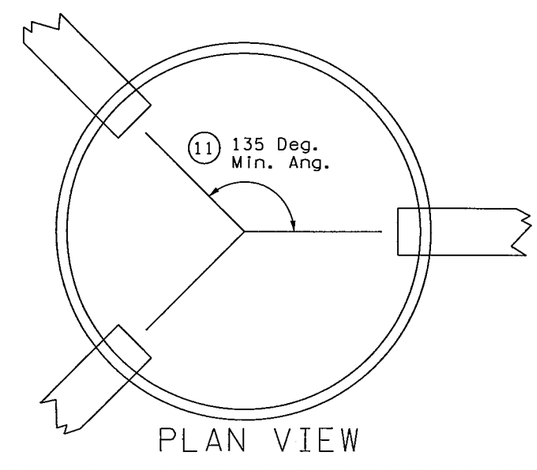

HANDHOLE DETAIL - (PVC HANDHOLE/METAL COVER)

NOTES:

1. ATTACH SPLIT 24" DIA. P.V.C. COVER SUPPORT RING WITH FOUR 3/8 " DIA. X 2" LONG BOLTS AND NUTS AT 90° APART.
2. TWO TYPE 2 SHOULDER EYEBOLTS, 3/8 " DIA. X 1 1/4 " SHANK LENGTH, WITH HEX. NUTS AT 180° APART (FOR LIFTING HANDHOLES AND SUPPORTING ELECTRICAL CABLES).
3. FOUR 1/4 " X 1 1/4 " LONG GALVANIZED LAG SCREWS.
4. ATTACH SPLIT 24" DIA. PVC EXTENSION RING WITH FOUR 3/8 " DIA. X 2" LONG BOLTS AT 90° APART. THE BOLTS & NUTS COMPLY WITH MN/DOT 3391.2E, THE OTHER HARDWARE WITH 3392.
5. COMPACT COARSE FILTER AGGREGATE COMPLYING WITH MN/DOT 3149.2H TO A 12" DEPTH.
6. CONDUIT ENTRANCES IN THE BARREL ARE SIZED 1.0" LARGER THAN THE CONDUIT USED.
7. PLUG HANDHOLE AT CONDUIT INSTALLATION, PROVIDING A WATER TIGHT SEAL.
8. THE PVC PIPE COMPLIES WITH ASTM F 9T-1.
9. INSTALL ORANGE LOCATER BALL WITH TIE WRAP TO EYE BOLT. (INCIDENTAL-BALL FURNISHED BY MNDOT)
10. MINIMUM CONDUIT DEPTH FOR LOOP WIRES SHALL BE 1.5'.
11. F&I CONDUITS NO SHARPER THAN 135 DEG. FOR INSTALLATIONS OF CONDUIT WHERE FIBER WILL PASS THRU.
12. F&I CONDUITS WITH FIBER PASSING THRU AT 30" DEPTH THRU HANDHOLES. TRANSITION TO/FROM STANDARD 36" FIBER DEPTH OR PUSH DEPTH OUTSIDE HANDHOLES. NOTE:PROVIDE 36" CONDUIT STUB OUT FOR DIRECT BURIED FIBER PASSING THRU HANDHOLE.

REV. NO.	DATE: / /
REV. NO.	DATE: / /

CERTIFIED BY _____ LICENSED PROFESSIONAL ENGINEER LIC.NO. 26530 MAY 25 2012

S.P. 179-020-031 S.P. 019-605-028 (TH 13)
STATE PROJ. NO. 1901-148 SHEET NO. SZ7 OF SZ23 SHEETS

c:\projectwise\pw_working\koobitom\d1341146\1901_164det.dgn

PLOTTED: 5/16/2012 10:11:33 AM Koobltom MDROSFRWXD038 TMS

STAND ALONE SERVICE FOUNDATION

(SEE TMS SERVICE EQUIPMENT DETAIL)

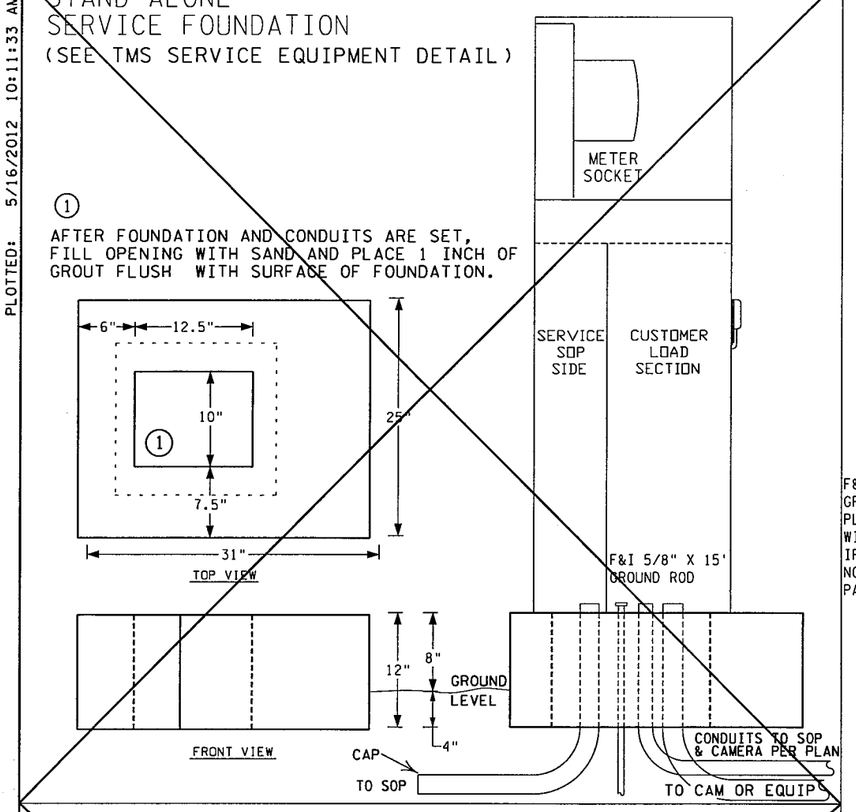

NOTE: INSTALL SCREW-IN RCS FOUNDATION WITHIN CONCRETE AREAS AS DIRECTED IN PLANS

SEE STD. PLATE 8112 FOR ANCHOR BOLT REQUIREMENTS

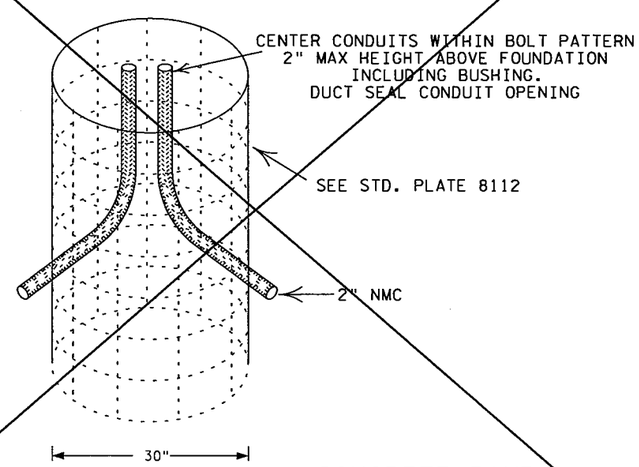

CONCRETE RAMP CONTROL SIGNAL FOUNDATION

(SEE RAMP CONTROL SIGNAL DETAIL)

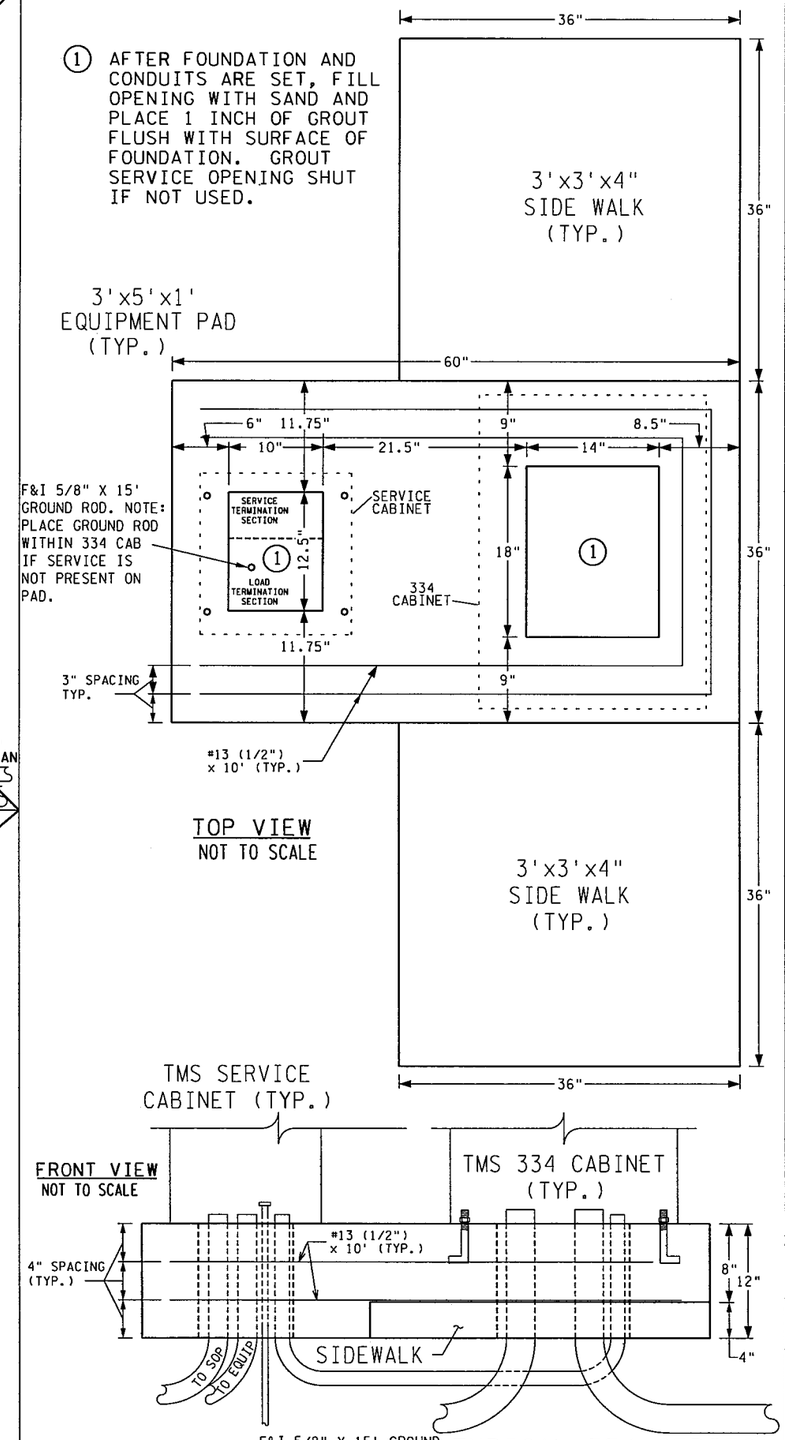

(SEE CABINET INSTALLATION DETAIL)

TYPICAL 334 SERIES & DMS FOUNDATION WITH SERVICE CABINET

SEE STD. PLATE 8120 FOR ANCHOR BOLT REQUIREMENTS

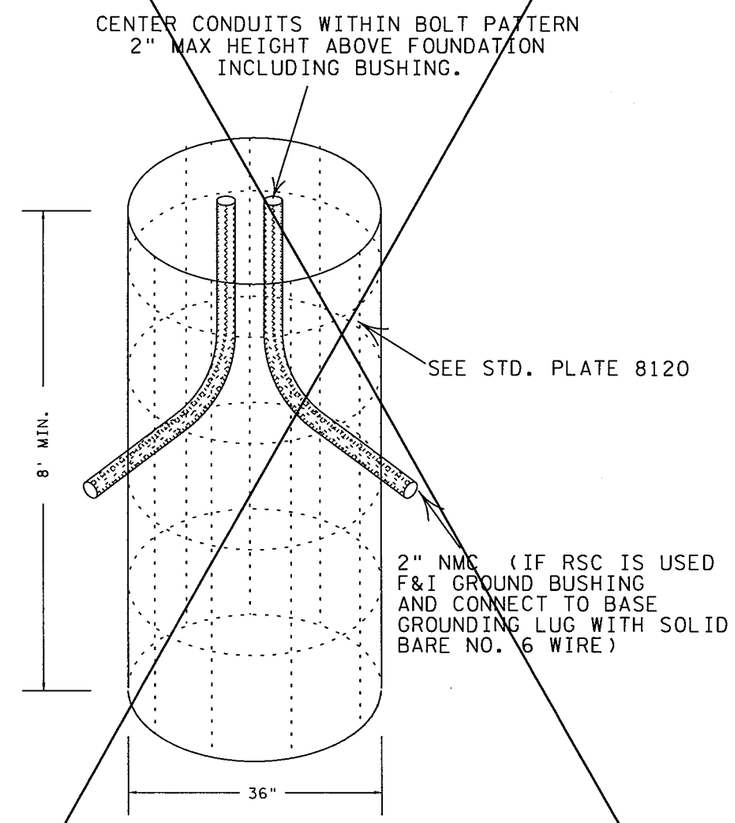

CCTV POLE FOUNDATION

(SEE CCTV INSTALLATION DETAIL)

TYPICAL FOUNDATION DETAILS

REV. NO.	DATE: / /	CERTIFIED BY LICENSED PROFESSIONAL ENGINEER	LIC.NO. 26530 MAY 25 2012	STATE PROJ. NO. 1901-148	S.P. 179-020-031 (TH 13) S.P. 019-605-028	SHEET NO. SZ8 OF SZ23 SHEETS
REV. NO.	DATE: / /					

c:\projectwise\pw_working\koobltom\d1341146\1901_164det.dgn

Kooblitom MDROSFRWXD038 TMS
PLOTTED: 5/16/2012 10:09:09 AM

FRONT VIEW

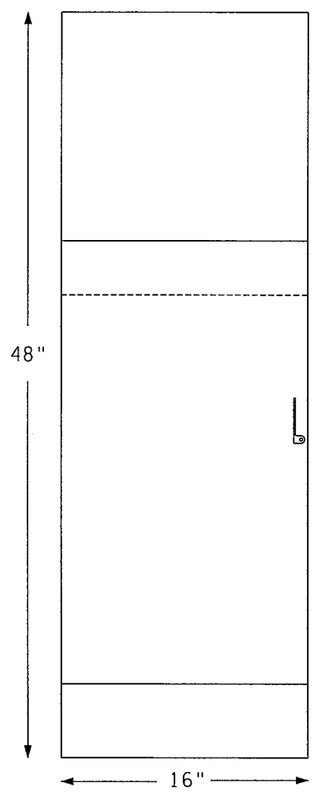

FRONT VIEW (INTERIOR)

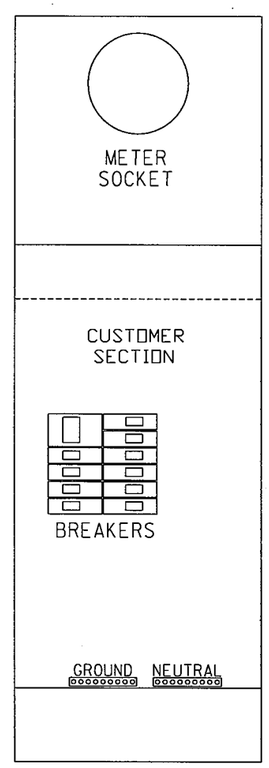

REAR VIEW

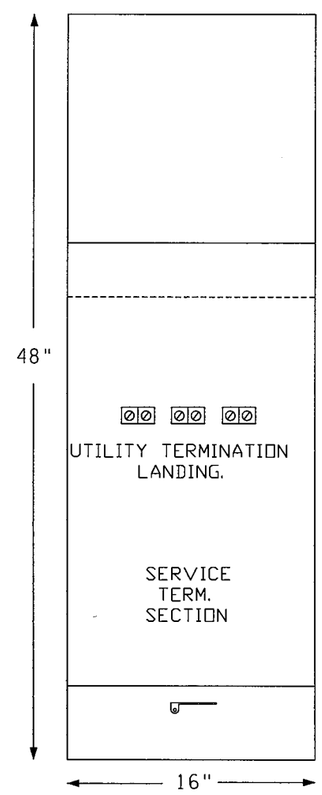

SIDE VIEW

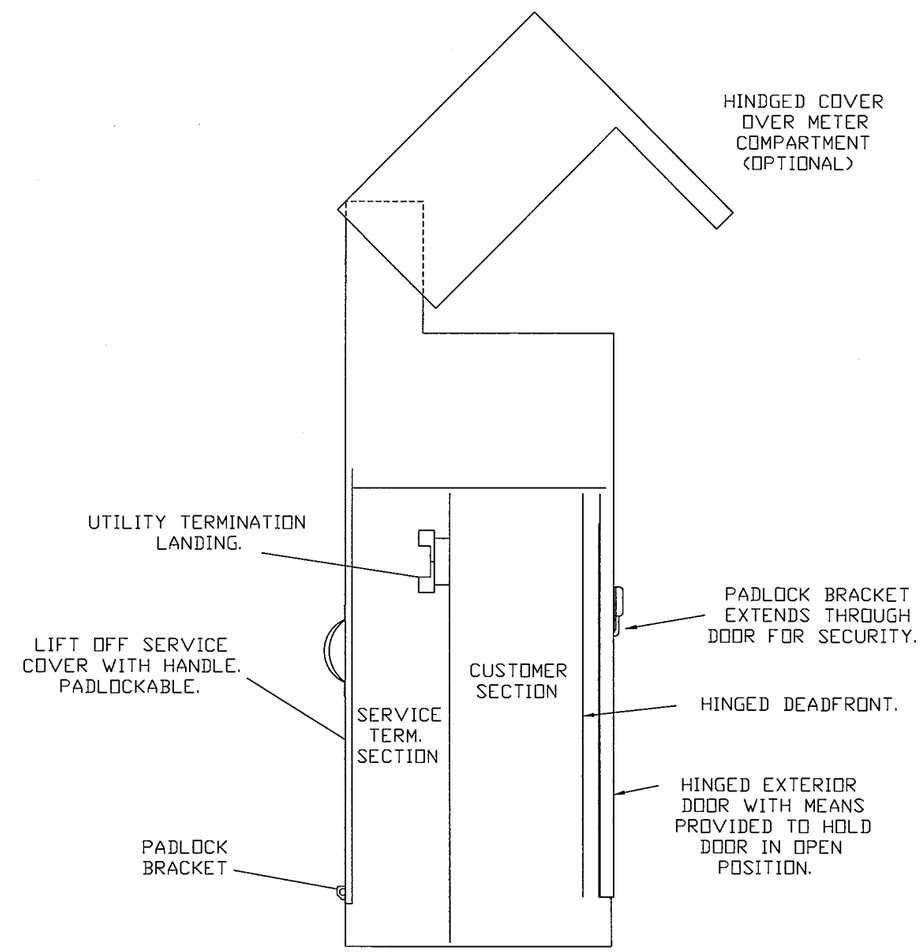

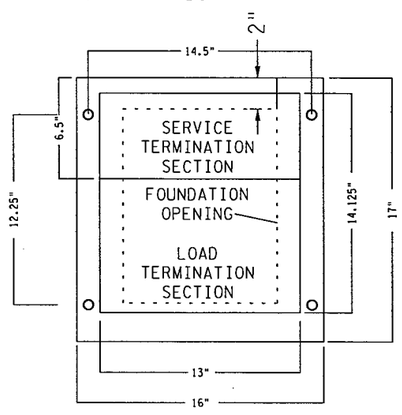

CABINET CONSTRUCTION:

-NEMA3R
-1/8" ALUMINUM 5052-H32
-ANODIZED 1 HOUR CLEAR
-NEOPRENE GASKETED DOORS
-NON-CORRODING HARDWARE
-ETL LISTED IN ACCORDANCE W/UL508A

STANDARD TMS SERVICE CABINET SHALL COME EQUIPPED WITH 60A 2-P MAIN BREAKER, 1-30A CB & 1-20A CB WITH OPENINGS FOR 12 CIRCUITS TOTAL, UNLESS MODIFIED AT INDIVIDUAL LOCATIONS AS NOTED IN THE PLANS.

TMS SERVICE CABINET

REV. NO.	DATE: / /	CERTIFIED BY LICENSED PROFESSIONAL ENGINEER LIC.NO. 26530 MAY 25 2012	S.P. 179-020-031 S.P. 019-605-028 STATE PROJ. NO. 1901-148 (TH 13) SHEET NO. SZ9 OF SZ23 SHEETS
REV. NO.	DATE: / /		

c:\projectwise\pw_working\kooblitom\d1341146\1901_164det.dgn

PLOTTED: 5/16/2012 10:11:58 AM Koobltom MDROSFRWXD038 TMS

1. F&I POWER CABLE FROM SOURCE OF POWER-TERMINATE AT TERMINAL BLOCK
2. F&I POWER CABLE TO DMS-TERMINATE AT EACH END
3. F&I 1-FO PIGTAIL-PLACE SLACK LOOP OF PIGTAIL CABLE WITHIN CABINET AGAINST SIDEWALL. CONNECT ARMOUR TO NORSCAN DEVICE-TERMINATE END & LAND IN PATCH PANEL
4. FIBER OPTIC PATCH CORDS (MNDOT PROVIDED & INSTALLED)
5. F&I CAT 6 TO CMS-CONNECTED BY DMS MANUFACTURER (PROVIDE 10' SLACK IN CABINET & 40' SLACK IN SIGN)
6. COMM LINE (MNDOT PROVIDED & INSTALLED)
7. F&I 1-1/C NO.6 BARE GROUND WIRE-COAT CONNECTION WITH ANTI-OXIDIZING AGENT
8. INSTALL NEOPRENE GASKET (SUPPLIED BY MNDOT)
9. COMMUNICATION EQUIPMENT (MNDOT PROVIDED & INSTALLED)
10. SHEATH GROUNDING UNIT

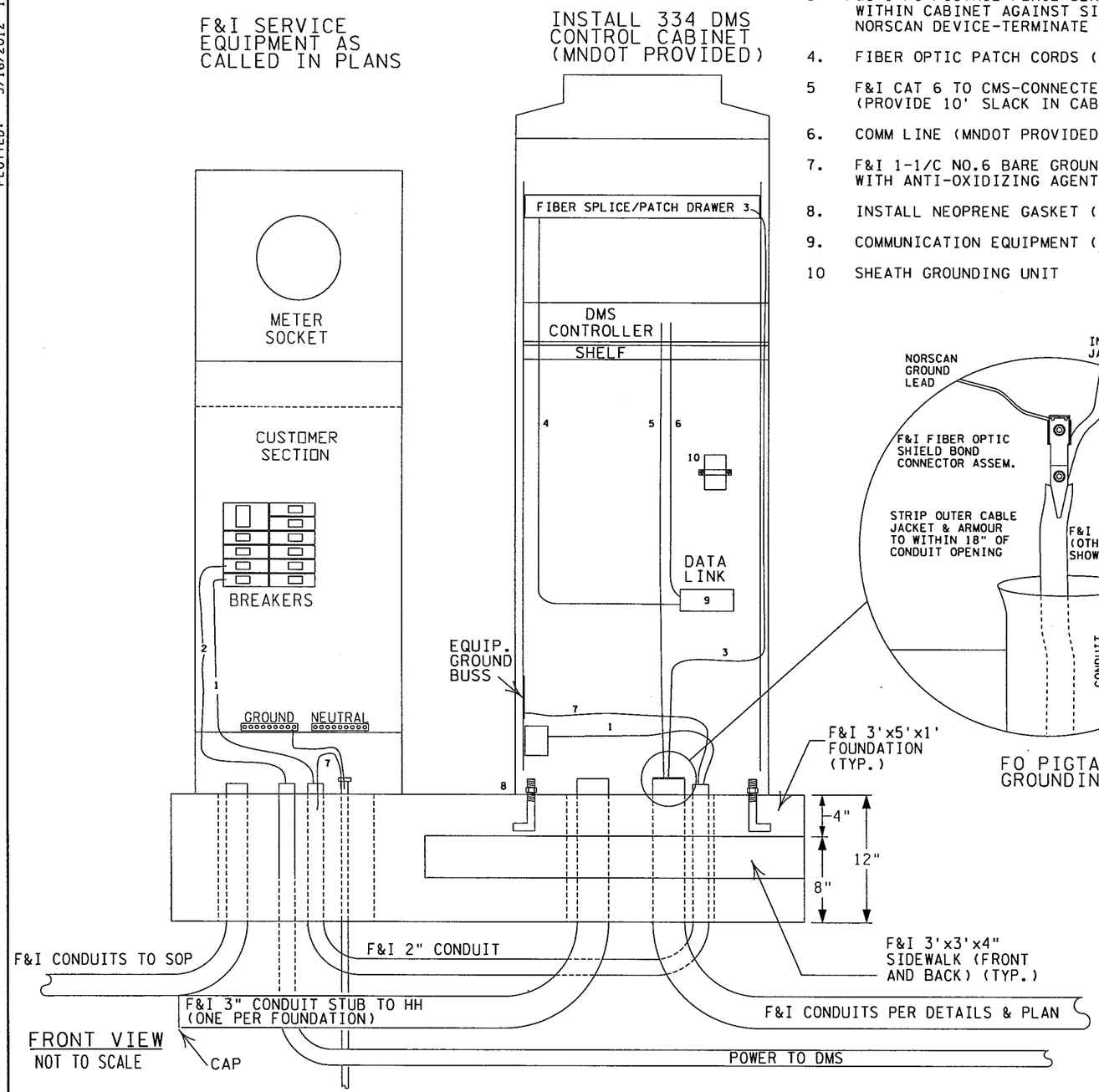

FRONT VIEW
NOT TO SCALE

FO PIGTAIL GROUNDING

F&I 5/8" X 15' GROUND ROD ON BREAKER SIDE OF SERV. CAB. NOTE: PLACE GROUND ROD WITHIN 334 CAB IF SERVICE IS NOT PRESENT ON PAD.

TYPICAL 334 SERIES DMS CABINET INSTALLATION

MNDOT PROVIDED

1. TMS 334Z CONTROL CABINET INCLUDING:
   A) DMS CONTROLLER
   B) FIBER OPTIC PATCH PANEL
   C) NEOPRENE CAB. GASKET
   D) SHEATH GROUNDING UNIT

MNDOT PROVIDED & INSTALLED

1. FIBER OPTIC PATCH CORDS
2. COMMUNICATION EQUIPMENT

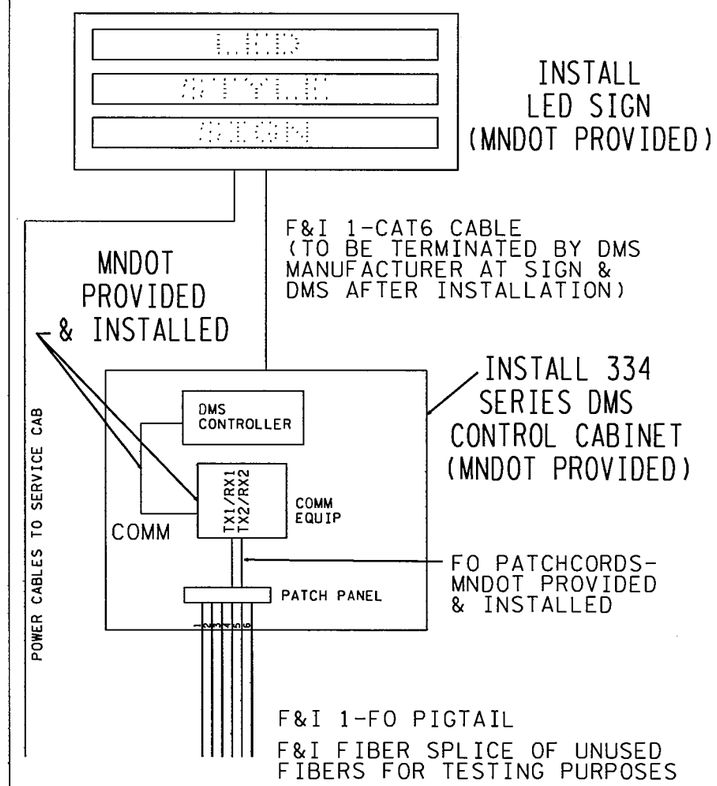

TYPICAL FIBER OPTIC CONTROLLED DMS EQUIPMENT INSTALLATION

TYPICAL DMS 334 CABINET INSTALLATION

REV. NO.	DATE: / /
REV. NO.	DATE: / /

CERTIFIED BY _____ LICENSED PROFESSIONAL ENGINEER LIC.NO. 26530 MAY 25 2012

S.P. 179-020-031 S.P. 019-605-028
STATE PROJ. NO. 1901-148 (TH 13) SHEET NO. SZ10 OF SZ23 SHEETS

c:\projectwise\pw_working\koobltom\d1341146\1901_164det.dgn

PLOTTED: 5/16/2012 10:07:12 AM KooblTom MDROSFRWXD038 TMS

GENERAL NOTES

* Add cable identifiers to color coded electrical tape with a permanent marker as shown on this detail.

e.g.: 94.41 East 24SM 01467M.

94.41 = Cable ID#
East = Direction
24SM = Cable fiber count
01467 = Nearest cable length marking to where the tape is applied.

* Electrical tape colors:
  NB (Blue)
  SB (Green)
  EB (Yellow)
  WB (Orange)
  Pigtails (White)

* The electrical tape with the identifiers is added to:
  - 334Z-Type Cabinets to within 18" of the entrance conduit on the outer jacket of the fiber optic cable.
  - Pole Mounted CCTV Cabinet between the entrance point and the fiber termination panel.
  - FO Splice Vaults to within 18" of the splice enclosure and the entrance conduit.
  - TMS Shelter Cabinets to within 18" of the entrance conduit on the outer jacket of the fiber optic cable and again to within 18" of the splice panel on the inner jacket of the fiber optic cable.

* Neatly tape the fiber optic cables together as needed near the fiber enclosure then throughout the length of slack.

* Neatly coil the fiber optic cables into the fiber optic hanger brackets inside the vault.

* This drawing is not intended to show the fiber optic cables in their final position.

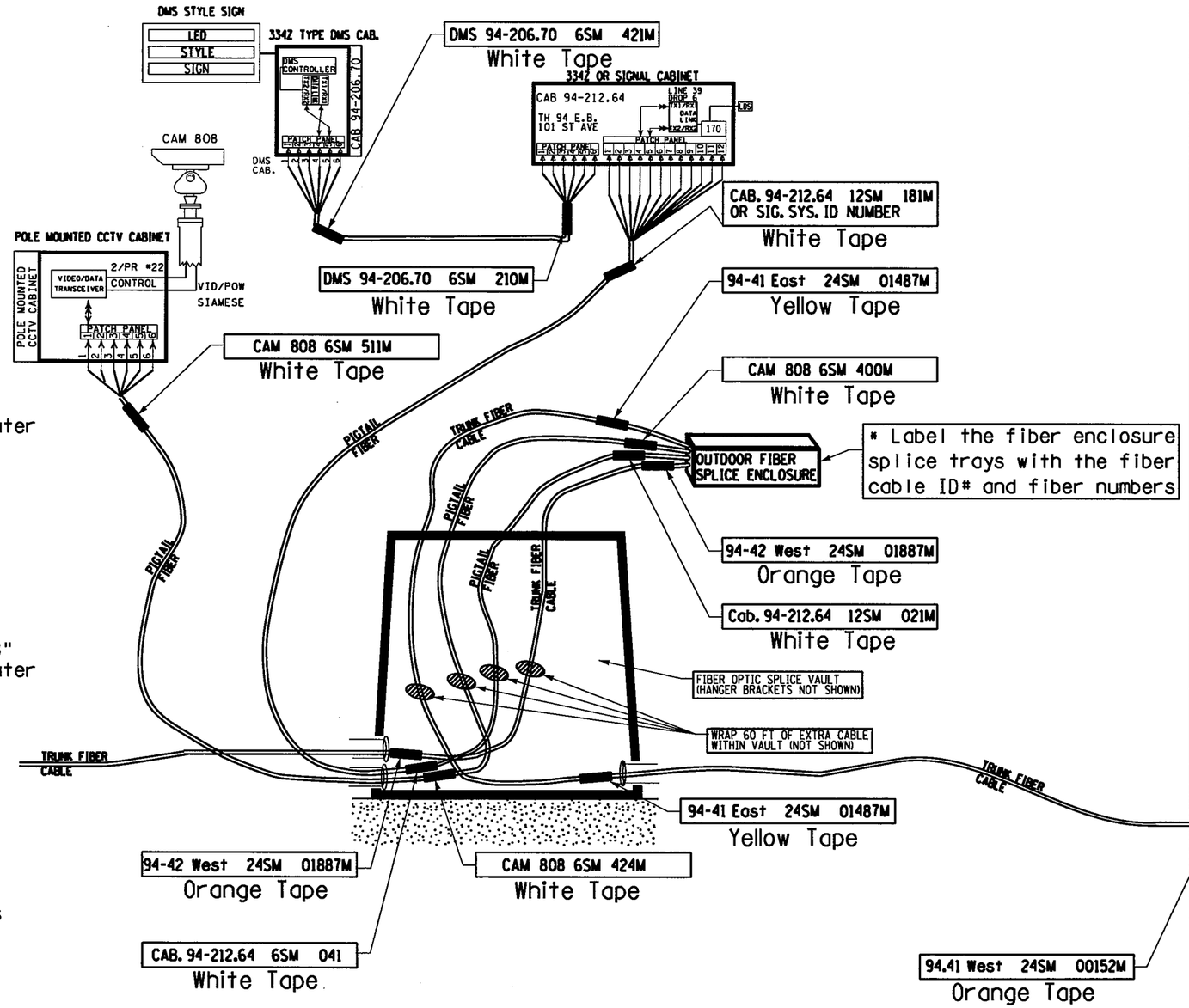

TMS SHELTER CABINET

SHELTER NOTES

* Label the indoor pigtail six-paks on the outer jacket at both the splice tray/wheel and inside the patch panel to indicate the fiber cable ID # and which six fibers the six-paks are spliced to: (e.g. 94-12 SM7-12)

* Label the front of the splice panels with the fiber cable ID#, direction, and fiber count.

* Label splice trays/wheels with the fiber cable ID# and the fiber count.

* Label the front of patch panels with the fiber cable ID#, direction and fiber count.

* Label the sheath grounding unit with the fiber cable ID#, direction and fiber count.

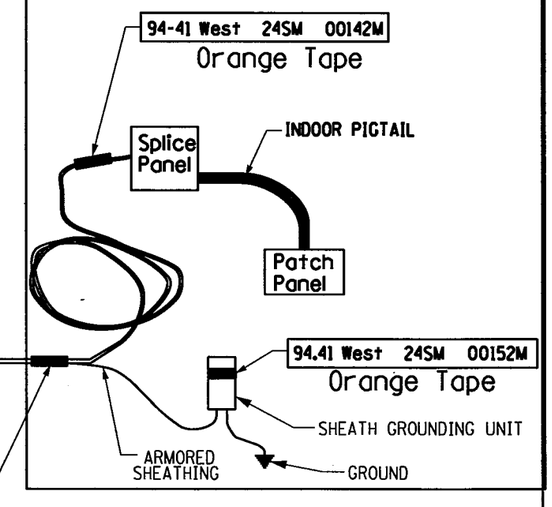

PLEASE NOTE: OUTDOOR FIBER SPLICE ENCLOSURE IS SHOWN OUTSIDE OF THE SPLICE VAULT. THE ACTUAL PLACEMENT IS WITHIN THE VAULT HANGING ON BRACKETS (NOT SHOWN)

FIBER OPTIC CABLE LABELING DETAIL

S.P. 179-020-031 S.P. 019-605-028

REV. NO.	DATE: / /
REV. NO.	DATE: / /

CERTIFIED BY LICENSED PROFESSIONAL ENGINEER LIC.NO. 26530 MAY 25 2012

STATE PROJ. NO. 1901-148 (TH 13) SHEET NO. SZ11 OF SZ23 SHEETS

c:\projectwise\pw_working\kooblitom\d1341146\1901_164det.dgn

Koobltom MDROSFRWXD038 TWS
PLOTTED: 5/16/2012 10:07:24 AM

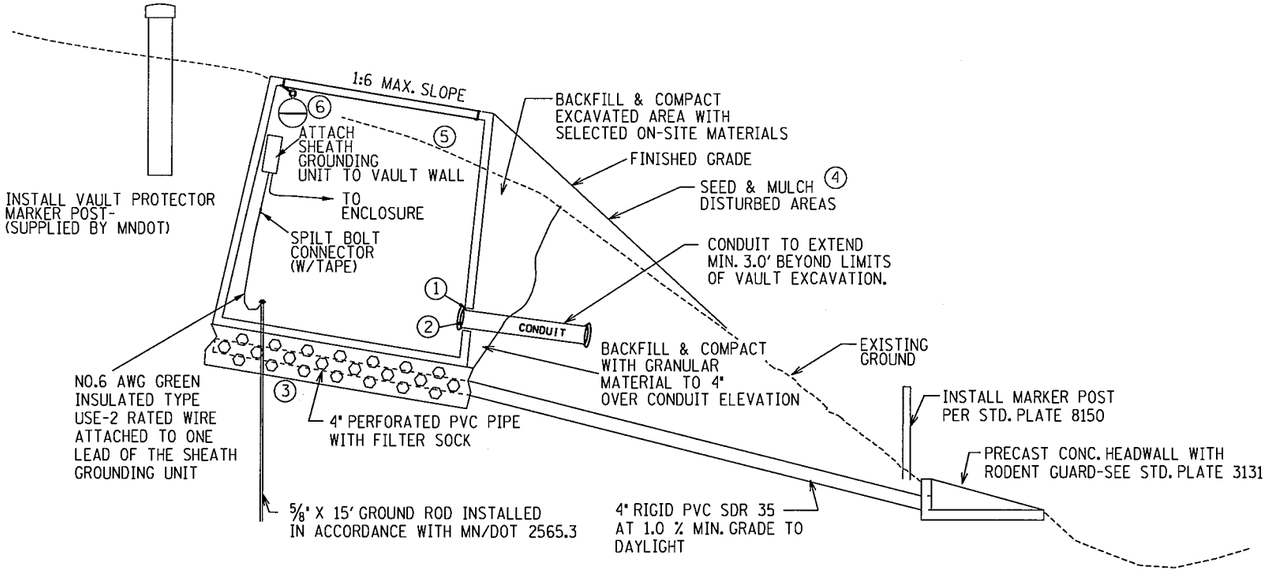

VAULT INSTALLATION & DRAINAGE SYSTEM (SLOPED AREAS)

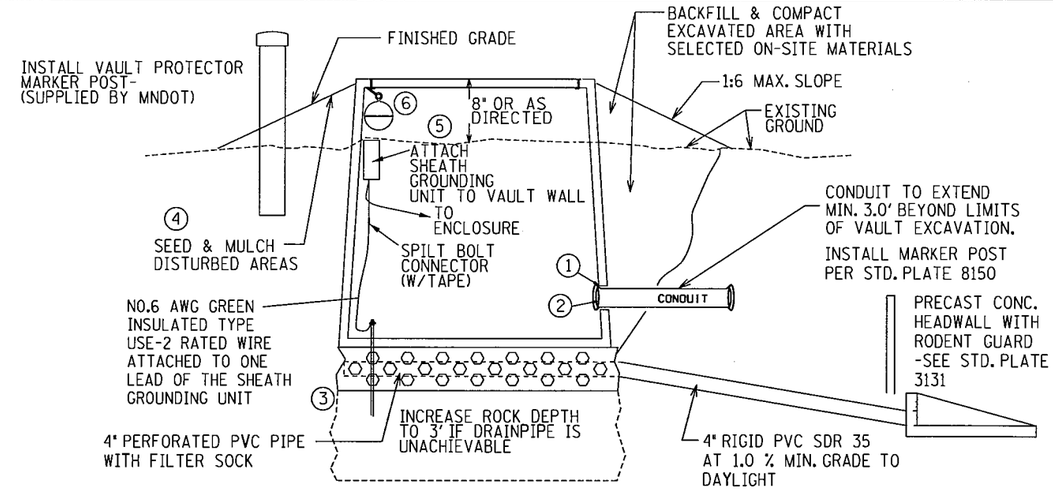

VAULT INSTALLATION & DRAINAGE SYSTEM
(LEVEL GROUND & ACHIEVABLE DRAINAGE AREAS)

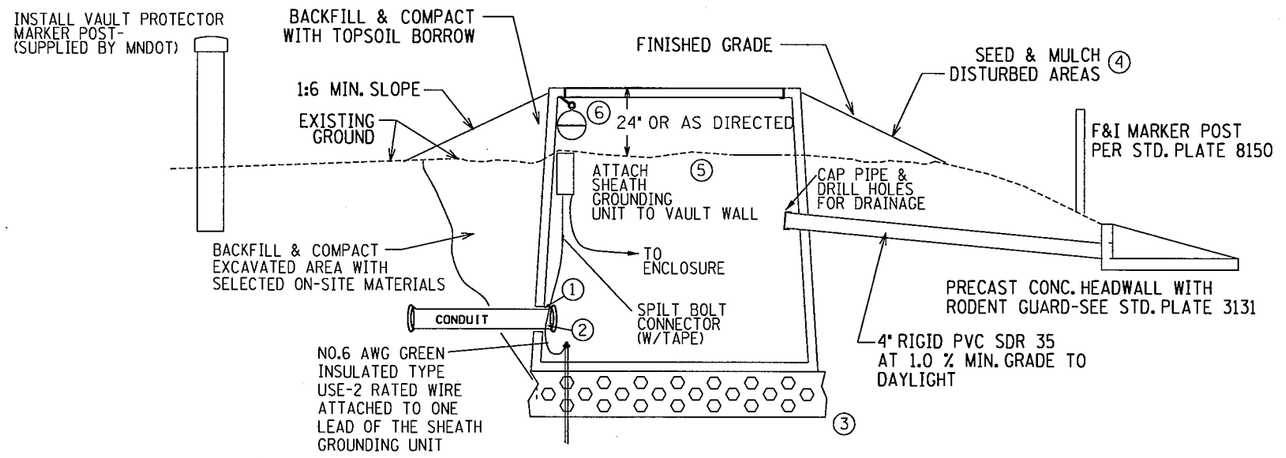

VAULT INSTALLATION & DRAINAGE SYSTEM
(LEVEL GROUND & MINIMUM ACHIEVABLE DRAINAGE AREAS)

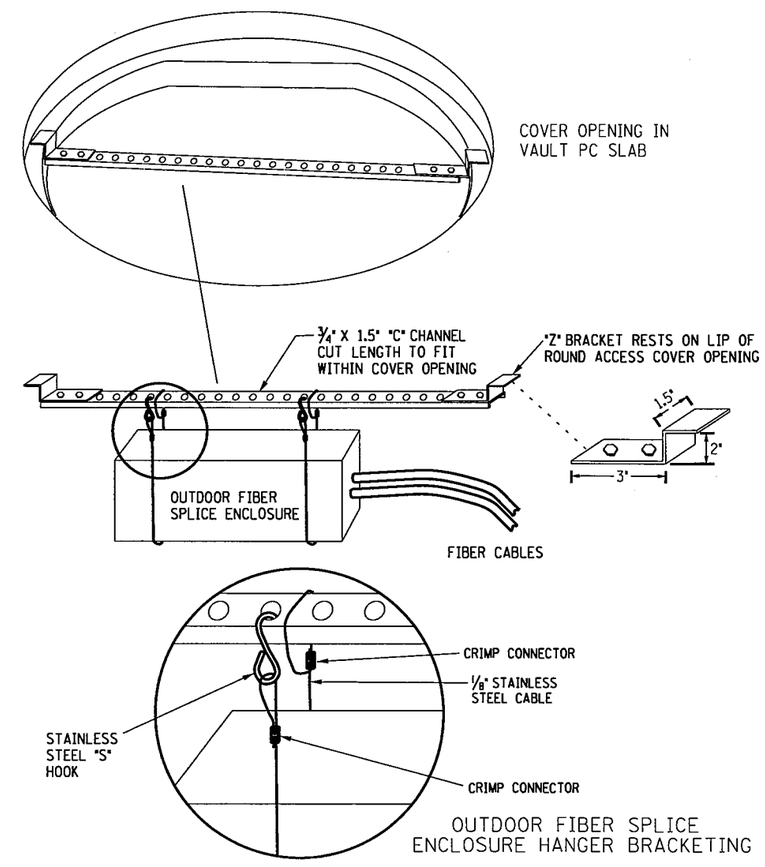

FIBER OPTIC SPLICE VAULT INSTALLATION

SPECIFIC NOTES

1. OPENINGS FOR CONDUIT SHALL BE SEALED WITH MATERIAL COMPATIBLE SEALANT. (INCIDENTAL)
2. PLUG CONDUIT OPENING WITH A DRAINABLE COMPOUND (INCIDENTAL)
3. F&I 1.0' COARSE FILTER AGGREGATE UNDER BASE COMPLYING WITH MN/DOT 3149.2H. F&I 4" PERFERATED PVC PIPE WITH FILTER SOCK TO PROVIDE DRAINAGE. (INCIDENTAL)
4. RESTORE DISTURBED AREAS FOR TMS INSTALLATION WITH SEED AND TYPE I MULCH PER MNDOT 2575.3 (INCIDENTAL)
5. STRIP TOPSOIL FROM VAULT AND SLOPE AREAS PRIOR TO VAULT INSTALLATION (INCIDENTAL)
6. MOUNT LOCATOR BALL WITH TIE WRAP TO COVER LEDGE

GENERAL NOTES

1. GROUND CONNECTIONS SHALL BE COATED WITH OXIDATION PROHIBITING COMPOUND.
2. CABLE SHALL ENTER BELOW THE SUPPORT BRACKETS WITH MIN. 70' OF SLACK FOR EACH CABLE OUTSIDE OF THE ENCLOSURE. CABLE SHALL BE COILED AROUND INSIDE OF SUPPORT BRACKETS. CABLES SHALL BE CUT TO THE SAME LENGTH AT THE ENCLOSURE.
3. ALL HARDWARE SHALL BE STAINLESS STEEL WITH EXCEPTION OF THE "C" CHANNEL MOUNTING BAR.
4. THE FRAME AND LID OF THE VAULT SHALL BE IN ACCORDANCE WITH AASHTO LOAD RATING H-10

REV. NO.	DATE: / /
REV. NO.	DATE: / /

CERTIFIED BY _____ LICENSED PROFESSIONAL ENGINEER LIC.NO. 26530 MAY 25 2012

S.P. 179-020-031 S.P. 019-605-028
STATE PROJ. NO. 1901-148 (TH 13) SHEET NO. SZ12 OF SZ23 SHEETS

c:\projectwise\pw_working\koobltom\d1341146\1901_164det.dgn

PLOTTED: 5/16/2012 10:06:53 AM Koobi Tom MDROSFRWXD038 TMS

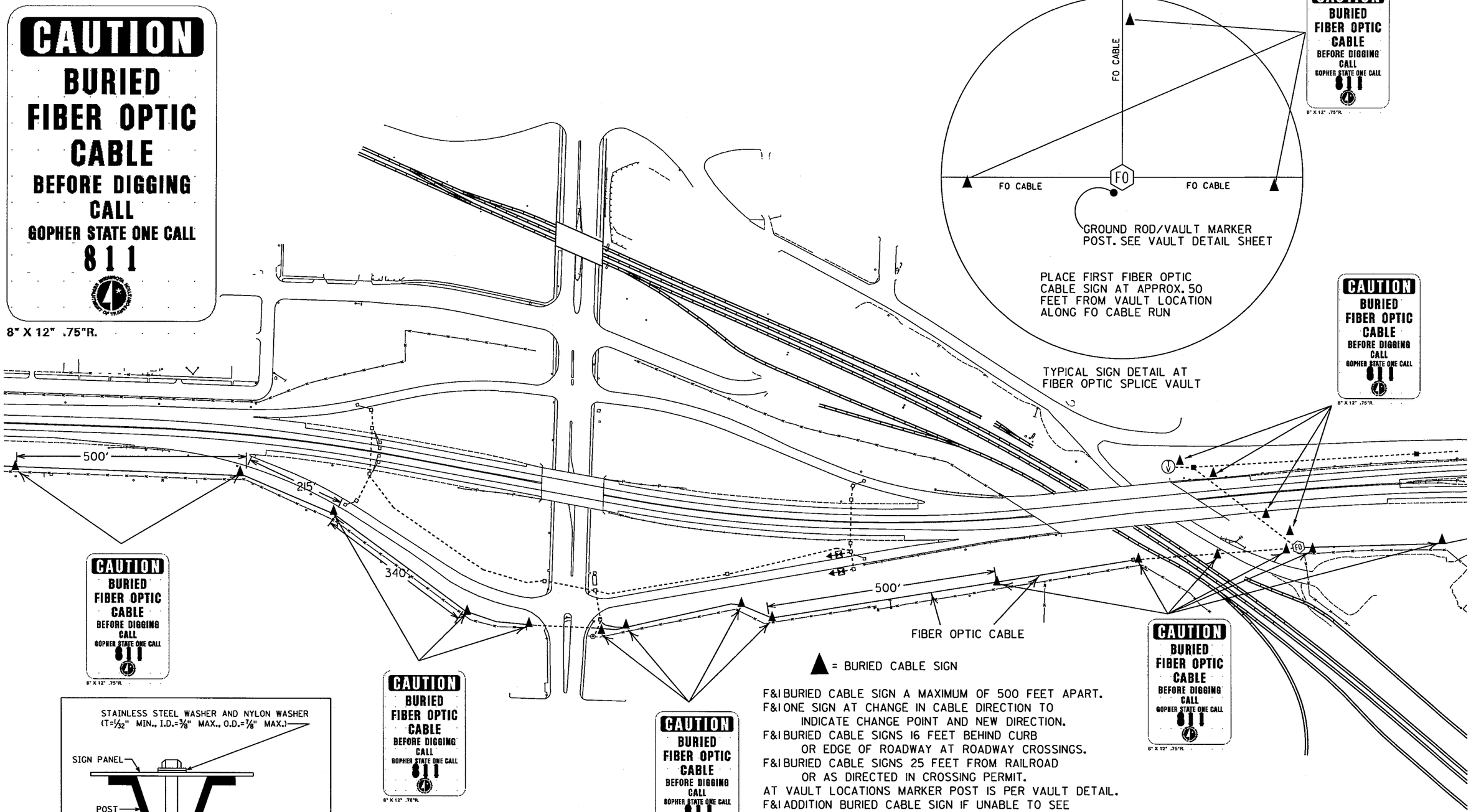

F&I BURIED CABLE SIGN A MAXIMUM OF 500 FEET APART.
F&I ONE SIGN AT CHANGE IN CABLE DIRECTION TO INDICATE CHANGE POINT AND NEW DIRECTION.
F&I BURIED CABLE SIGNS 16 FEET BEHIND CURB OR EDGE OF ROADWAY AT ROADWAY CROSSINGS.
F&I BURIED CABLE SIGNS 25 FEET FROM RAILROAD OR AS DIRECTED IN CROSSING PERMIT.
AT VAULT LOCATIONS MARKER POST IS PER VAULT DETAIL.
F&I ADDITION BURIED CABLE SIGN IF UNABLE TO SEE FROM SIGN TO SIGN (THIS INCLUDES CHANGES IN ELEVATION).
F&I BURIED CABLE SIGNS BETWEEN CABLE AND R/W FENCE, 3.0' FROM CABLE WITH SIGN PANEL PARALLEL TO BURIED CABLE
NOTE: SIGNS MAY BE MOUNTED ON FACE OF WALLS WHERE NECESSARY AND AS APPROVED BY THE ENGINEER

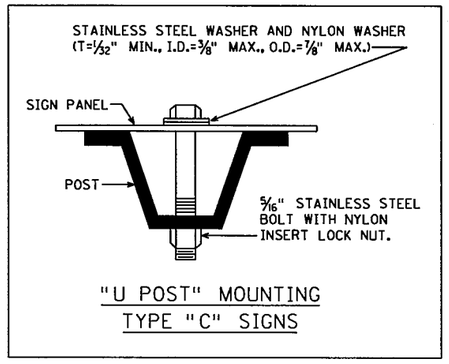

"U POST" MOUNTING
TYPE "C" SIGNS

S.P. 179-020-031 S.P. 019-605-028 BURIED CABLE SIGN PLACEMENT TYPICAL

REV. NO.	DATE: / /
REV. NO.	DATE: / /

CERTIFIED BY _____ LICENSED PROFESSIONAL ENGINEER LIC.NO. 26530 MAY 25 2012

STATE PROJ. NO. 1901-148 (TH 13) SHEET NO. SZ13 OF SZ23 SHEETS

c:\projectwise\pw_working\koobitom\d1341146\1901_164det.dgn

SZ 2	SALVAGE & INSTALL DMS (TYPE A H PILE FOOTINGS)															
				POST								PILE				
SIGN NO.	PRESENT LOCATION	NEW LOCATION	PANEL SIZE (IN.)	SIZE	QUANT.	L1 (FT.)	L2 (FT.)	ADDITIONAL STEEL PER POST (LBS.)(1)	WEIGHT (LBS.)	c (IN.)	d (IN.)	"P" (FT.)	WEIGHT (LBS.)	TOTAL WEIGHT STRUCTURAL STEEL (LBS.)	"X" (FT.)	"H" (FT.)
	681+00 NB	672+00 NB	120 x 120	W 8 X 24	2			118	236	24	72	12	576	812	18.25	7
TOTAL														812		

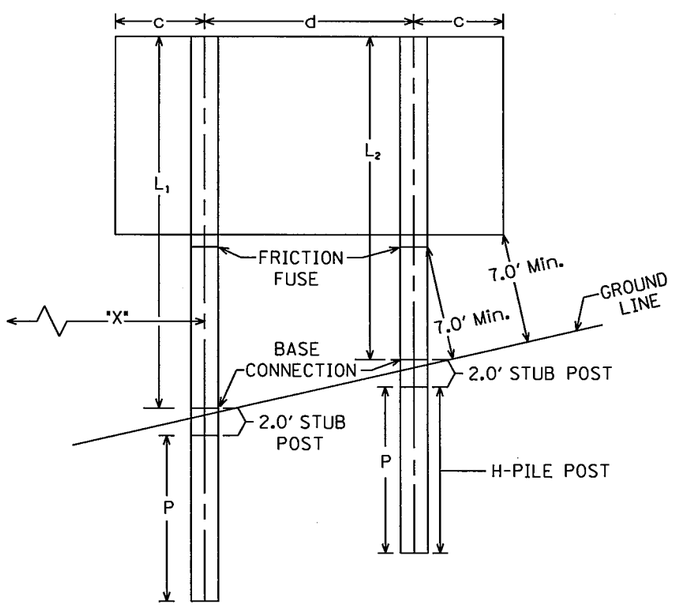

BREAKAWAY POSTS-H-PILE FOOTING

(L_1 IS POST NEAREST ROADWAY)

TYPE A SIGNS

POST QUANTITIES			
POST SIZE	QUANTITY (1)	POST SIZE	QUANTITY (1)
W4X13	59+13 LBS/FT	W8X28	143+28 LBS/FT
W5X16	67+16 LBS/FT	W8X31	173+31 LBS/FT
W6X20	104+20 LBS/FT	W10X39	195+39 LBS/FT
W8X24	118+24 LBS/FT		

SPECIFIC NOTE:

(1) Constant includes stub post weight

GENERAL NOTES:

1. Pile shall be the same size as the sign post and is to be driven to a 12 to 14 ton bearing capacity.
2. See sheets SZ16 and SZ17 for Structural Details, Type A Signs (Breakaway).
3. Post lengths are approximate.
4. "X" is the distance from the edge of the thru lane to the first post.
5. "H" is the height above the pavement edge to the bottom edge of panel.
6. P is the length of H-pile post.
7. See sheets SZ15 for cross sections.

S.P. 179-020-031 S.P. 019-605-028

A SIGN DATA SHEET

DRAWN BY: TLK	CHECKED BY: RAS	CERTIFIED BY [signature] LICENSED PROFESSIONAL ENGINEER	LIC. NO. 26530	MAY 25, 2012	STATE PROJ. NO. 1901-148 (TH 13)	SHEET NO. SZ14 OF SZ23 SHEETS

PLOTTED/REVISED: 6/13/2012
DISTRICT #: METRO
IPLOT NAME: IPLOT Not Installed on RTMC KoobiTom MDROSFRWXD038
PATH & FILENAME: c:\projectwise\pw_working\koobitom\d1341146\1901_164det.dgn

Koobl Tom MDROSFRWXD038 TMS
PLOTTED: 5/16/2012 10:07:53 AM

NOTE:
EACH INSTALL DMS ITEM SHALL INCLUDE THE INSTALLATION OF A 15' ONE PIECE GROUND ROD AND THE INSTALLATION OF THE 7/16 " GROUNDING BRAID STRAPPED TO THE POWER CONDUIT OR SIGN POST AS INDICATED

THE DMS GROUNDING BRAID WILL BE CONTINUOUS FROM THE DMS GROUND LUG THROUGH THE GROUND ROD EXOTHERMICAL WELD TO THE INTERNAL SIGN POST GROUND LUG WHEN APPLICABLE

STRAP GROUNDING BRAID TO POST OR CONDUIT AWAY FROM VIEW OF TRAFFIC.

DMS GROUNDING BRAID IS CONSTRUCTED OF 32 STRANDS OF 17 GAUGE COPPER WIRE, 7/16 " DIAMETER, BRAIDED SMOOTH TWIST, 65,500 CIRCULAR MILLS, NET WEIGHT 215 LBS. PER 1000 FT.

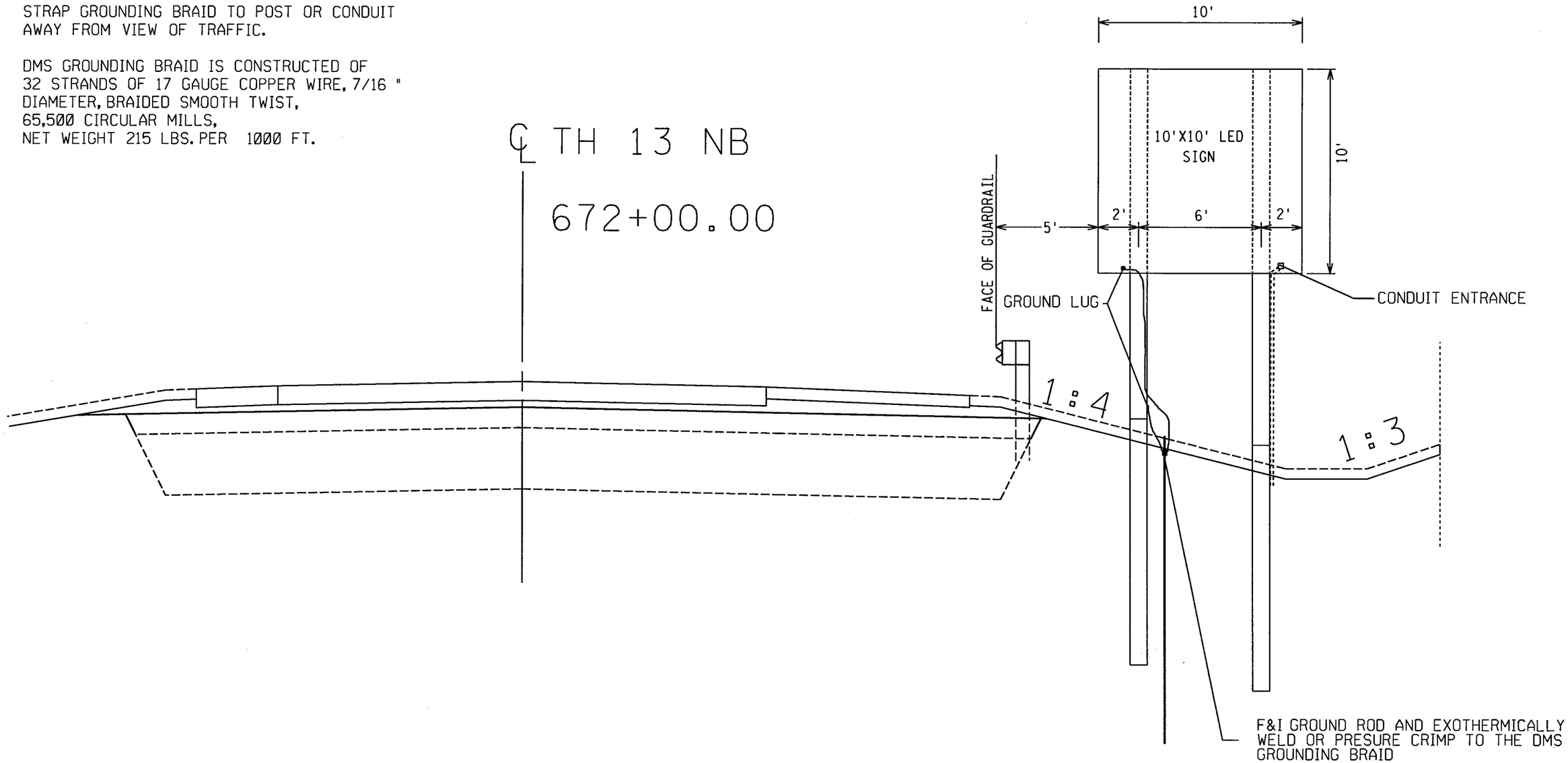

S.P. 179-020-031 S.P. 019-605-028

SIDE MOUNT DMS INSTALLATION

REV. NO.	DATE: / /	CERTIFIED BY LICENSED PROFESSIONAL ENGINEER LIC.NO. 26530 MAY 25 2012	STATE PROJ. NO. 1901-148 (TH 13) SHEET NO. SZ15 OF SZ23 SHEETS
REV. NO.	DATE: / /		

c:\projectwise\pw_working\koobltom\d1341146\1901_164det.dgn

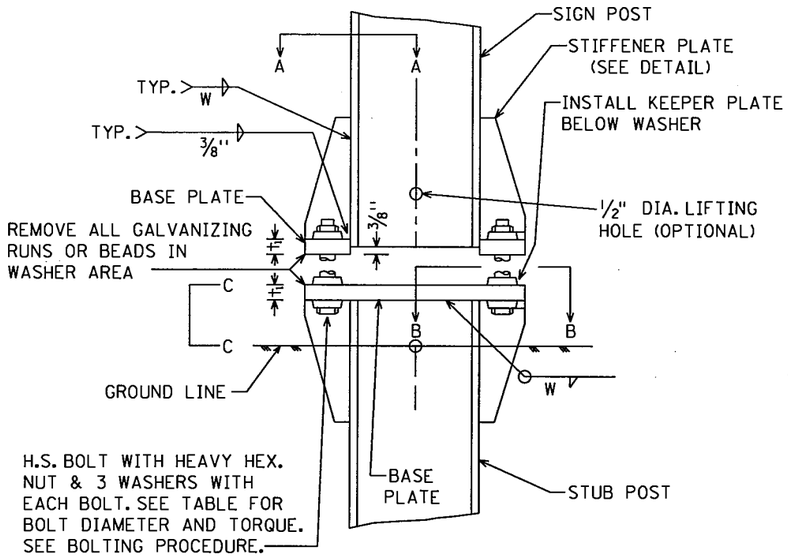

SIGN POST AND STUB POST
ELEVATION

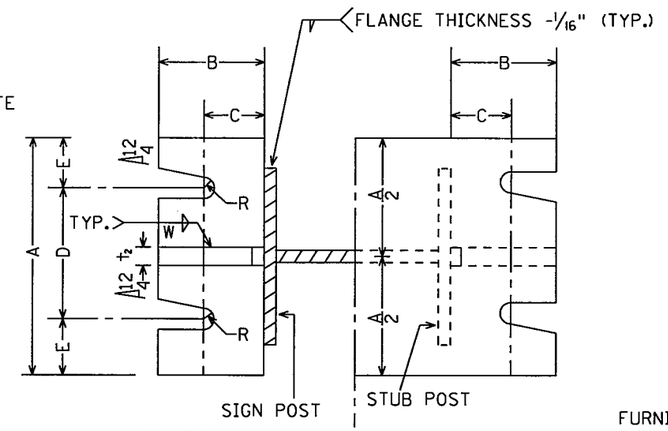

SECTION A-A SECTION B-B

(SEE TABLE FOR DIMENSIONS)

SECTIONS SHOWN ARE FOR INSTALLATIONS ON RIGHT SHOULDER AND IN GORE. PLATE SLOT BEVELS ARE OPPOSITE HAND FROM THAT SHOWN FOR INSTALLATIONS ON LEFT SHOULDER.

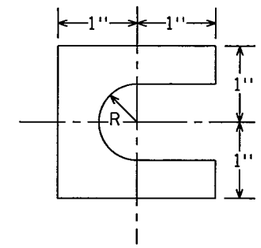

FURNISH TWO-.012"± THICK AND TWO-.032"± THICK SHIMS PER POST. SHIMS SHALL BE FABRICATED FROM BRASS SHIM STOCK OR STRIP CONFORMING TO A.S.T.M. B36.

SHIM DETAIL

BOLTING PROCEDURE - BASE CONNECTION

1. ASSEMBLE SIGN POST TO STUB POST WITH BOLTS AND WITH ONE OF THE FLAT WASHERS ON EACH BOLT BETWEEN PLATES.
2. SHIM AS REQUIRED TO PLUMB POST.
3. TIGHTEN ALL BOLTS THE MAXIMUM POSSIBLE WITH 12" OR 15" WRENCH TO BED WASHERS AND SHIMS AND TO CLEAN BOLT THREADS, THEN LOOSEN EACH BOLT IN TURN AND RETIGHTEN IN A SYSTEMATIC ORDER TO THE PRESCRIBED TORQUE. (SEE TABLE)
4. BURR THREADS AT JUNCTION WITH NUT USING A CENTER PUNCH TO PREVENT NUT LOOSENING.

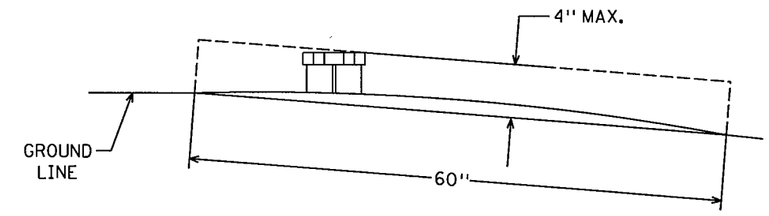

VIEW C-C

MAXIMUM PROJECTION OF STUB POST SHALL NOT EXTEND BEYOND A LINE, ABOVE AND 4" PARALLEL TO ANY CHORD, WHICH IS PERPENDICULAR TO (OR ALIGNED RADIALLY TO) THE CENTERLINE OF THE HIGHWAY AND HAS ITS (THE CHORD'S) END POINTS ON THE GROUND SURFACE ON OPPOSITE SIDES OF THE STUB POST.

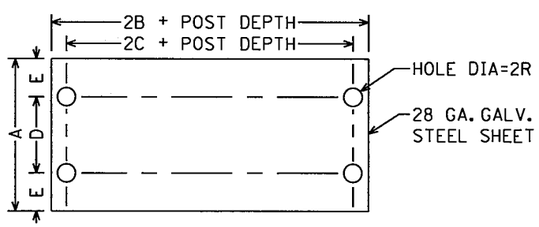

KEEPER PLATE

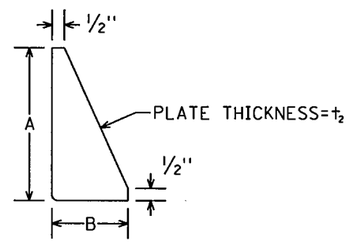

STIFFENER PLATE DETAIL

(SEE TABLE FOR DIMENSIONS)

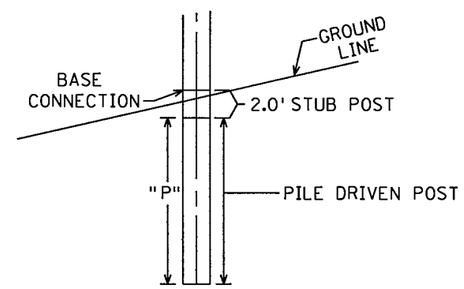

H-PILE FOOTING

DIMENSION / POST SIZE	BASE CONNECTION DATA: BOLT SIZE AND TORQUE	A	B	C	D	E	t_1	t_2	W	R	FUSE AND HINGE PLATE DATA: G	H	J	K	L	M	d_1	d_2	t_3	BOLT DIA.	FOOTING DATA: STUB POST LENGTH (1)	H PILE POST "P" (MIN. LENGTH)
W4X13	3/4" DIA. x 3-1/2" TORQUE=600"#	6"	2 1/2"	1 1/2"	3 1/2"	1 1/4"	1"	1/2"	1/4"	13/32"	2"	1 1/4"	4"	2 1/4"	7/8"	1"	11/16"	3/4"	3/8"	5/8"	2'	12'
W5X16											2 1/2"	1 1/4"	5"	2 3/4"	1 1/8"	1 1/8"	13/16"	7/8"	3/8"	3/4"	2'	12'
W6X20	7/8" DIA. x 4-1/4" TORQUE=800"#	8"	3"	1 3/4"	4"	2"	1 1/4"	1/2"	1/4"	15/32"	2 1/2"	1 1/4"	6"	3 1/2"	1 1/4"	1 3/8"	13/16"	1 1/8"	3/8"	3/4"	2'	12'
W8X24											2 1/2"	1 1/2"	6 1/2"	3 1/2"	1 1/2"	1 1/2"	15/16"	1 1/4"	1/2"	7/8"	2'	12'
W8X28	1" DIA. x 5" TORQUE=1000"#	8"	3"	2"	4"	2"	1 1/2"	3/4"	5/16"	17/32"	2 1/2"	1 1/2"	6 1/2"	3 1/2"	1 1/2"	1 5/8"	1 1/16"	1 1/8"	1/2"	1"	2'	12'
W8X31	1-1/8" DIA. x 5" TORQUE=1200"#	9"	3 1/2"	2"	5"	2"	1 1/2"	3/4"	5/16"	19/32"	3"	1 3/4"	8"	5 1/2"	1 1/4"	2"	1 1/16"	1 1/2"	1/2"	1"	2'	12'
(2) W10X39											3"	1 3/4"	8"	5 1/2"	1 1/4"	1 7/8"	1 3/16"	1 3/8"	1/2"	1 1/8"	2'	12'

SPECIFIC NOTES:

(1) MEASURED FROM TOP OF BASE PLATE

(2) OLD BEAM DEPTH = 10". NEW REVISED BEAM DEPTH = 9-7/8". KEEPER PLATES MUST BE FABRICATED ACCORDINGLY

TYPE A SIGN STRUCTURAL DETAILS

H-PILE FOOTING

SHEET 1 OF 2

S.P. 179-020-031 S.P. 019-605-028

Revised 9-10-01

STATE PROJ. NO. 1901-148 (TH 13) SHEET NO. SZ16 OF SZ23 SHEETS

PLOTTED/REVISED: 5/16/2012
DISTRICT •: METRO
IPLOT NAME: IPLOT Not Installed on RTMC KoobiTom MDROSFRWXD038
PATH & FILENAME: c:\projectwise\pw_working\koobitom\d1341\46\901_l64def.dgn

PLOTTED/REVISED: 5/16/2012
DISTRICT #: METRO
IPLOT NAME: IPLOT Not Installed on RTMC KoobiTom MDROSFRWXD038
PATH & FILENAME: c:\projectwise\pw_working\koobitom\d1341146\901_i64det.dgn

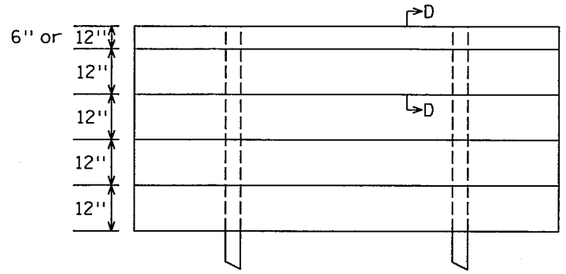

TYPICAL PANEL MOUNTING

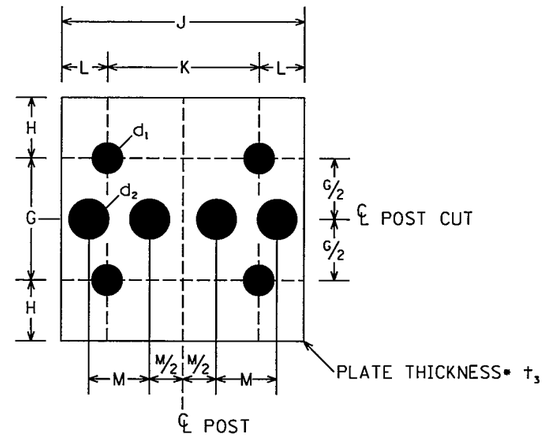

FRICTION FUSE PLATE DETAIL

(SEE TABLE ON SHEET 1 OF 2 FOR DIMENSIONS)

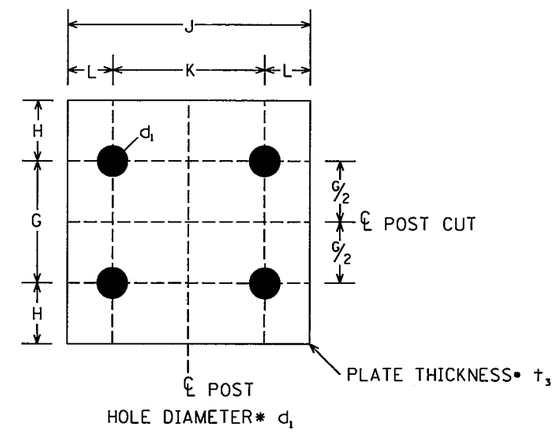

HINGE PLATE DETAIL

(SEE TABLE ON SHEET 1 OF 2 FOR DIMENSIONS)

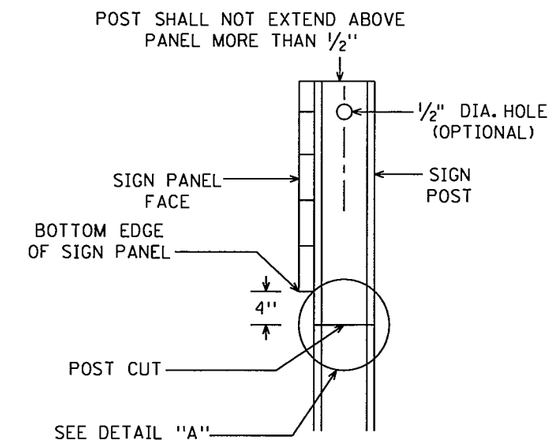

FRICTION FUSE SIDE VIEW

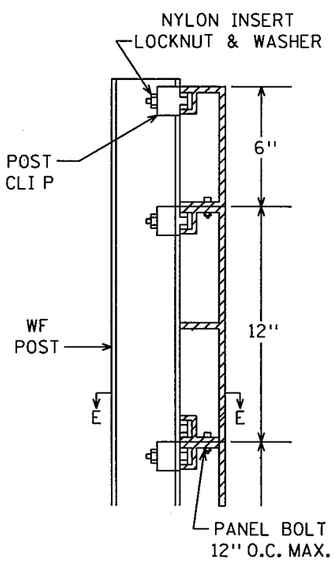

SECTION D-D

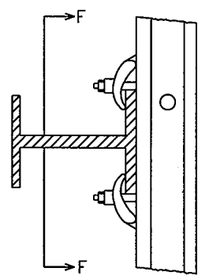

SECTION E-E

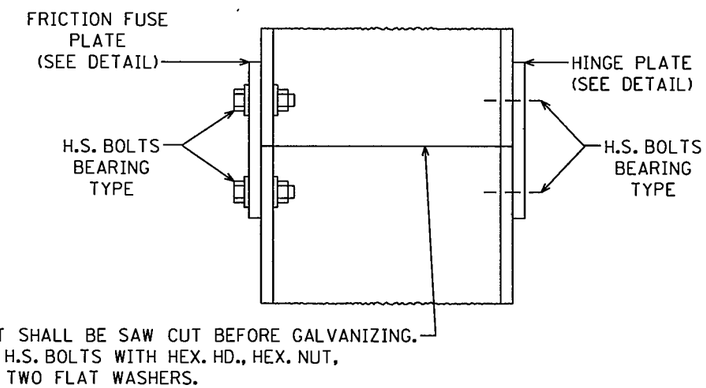

DETAIL "A" FRICTION FUSE

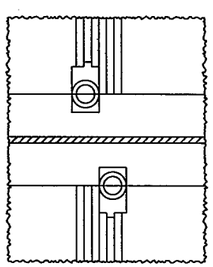

NOTE: POST CLIPS SHALL BE INSTALLED ON BOTH SIDES OF EACH POST AT EACH PANEL JOINT AS INDICATED.

SECTION F-F

CONTRACTOR NOTE: ALL FRICTION FUSE BOLTS SHALL BE TORQUE WRENCH TIGHTENED IN THE FIELD IN THE PRESENCE OF THE ENGINEER OR HIS REPRESENTATIVE. NUTS SHALL HAVE BEEN RETAPPED AND BOLT THREADS SHALL HAVE BEEN CLEANED WITH A 1/64" OVERSIZED RETHREADING DIE AFTER GALVANIZING. BEFORE TIGHTENING MAY BEGIN, THE TORQUE WRENCH SHALL BE CALIBRATED WITH A BOLT-TENSION-CALIBRATOR USING TYPICAL BOLT-NUT-WASHER ASSEMBLIES OF EACH SIZE AND LOT TO BE USED SO AS TO SHOW THE TORQUE NECESSARY TO OBTAIN THE FOLLOWING MINIMUM RESIDUAL TENSION IN EACH BOLT.

BOLT SIZE	MIN. RESIDUAL, BOLT TENSION
1/2" DIA.	12,050#
5/8" DIA.	19,200#
3/4" DIA.	28,400#
7/8" DIA.	39,250#
1" DIA.	51,500#
1-1/8" DIA.	56,450#

GENERAL NOTES:

1. STRUCTURAL STEEL SHALL CONFORM TO MN/DOT 3308. REINFORCING BARS SHALL CONFORM TO MN/DOT 3301. SPIRALS SHALL CONFORM TO MN/DOT 3305-NO SPLICES. HIGH STRENGTH BOLTS SHALL CONFORM TO A.S.T.M.-A325.
2. FORMS WILL BE REQUIRED FOR THE EXPOSED VERTICAL SURFACES OF THE FOOTINGS.
3. REFER TO "SIGN DATA" SHEET FOR SPECIFIC DATA ON EACH INDIVIDUAL SIGN INSTALLATION.
4. FRICTION FUSE PLATE SHALL BE INSTALLED ON SIDE OF POST FACING TRAFFIC.
5. ALL POST CUTS SHALL BE SAW CUTS. PLATES MAY BE SHEARED OR FLAME CUT USING A MECHANICALLY GUIDED CUTTING TORCH. EDGE PREPARATION SHALL BE IN ACCORDANCE WITH MN/DOT 2471.3C4 AND MN/DOT 2471.3d4.

TYPE A SIGN STRUCTURAL DETAILS

SHEET 2 OF 2

S.P. 179-020-031 S.P. 019-605-028

Revised 10-14-98

PLOTTED: 5/16/2012 10:06:38 AM Koobl Tom MDROSFRWXD038 TMS

INDEX OF REFRACTION

PROVIDE CABLE MANUFACTURERS INDEX OF REFRACTION USED FOR TESTING ON PROJECT.

◡ = FURNISHED SPLICE, NO SPLICE OTDR READING REQUIRED AT THIS LOCATION

X.X POWER METER TEST POINT

INSERT OPTICAL LINK LOSS IN dB
(TEST MULTI MODE FIBER AT 1300)
(TEST SINGLE MODE FIBER AT 1550)

.00/.00

INSERT OTDR SPLICE LOSS SHOT FROM THIS DIRECTION

INSERT OTDR SPLICE LOSS SHOT FROM THIS DIRECTION

= FO CABLE SPLICE POINT & OTDR TEST SPLICE READING

= OTDR TEST SPLICE READING ON INPLACE CABLE

PIGTAIL OTDR LENGTH ____km

OTDR LENGTH ____km TO SHELTER

PROVIDE TRUNK AND PIGTAIL OTDR FIBER LENGTH MEASUREMENTS USING OTDR READINGS FROM CONNECTORS AT SHELTER OR CABINETS TO SPLICE POINTS IN VAULTS

PIGTAIL ID#: _____

_____ m B
_____ m E

PROVIDE PIGTAIL CABLE JACKET DISTANCE MARKINGS AT ENTRY TO CONTROL CABINET AND AT ENTRY TO OUTDOOR FIBER SPLICE ENCLOSURE

FIBER OPTIC CABLE MARKINGS @
SPLICE ENCLOSURE _____
VAULT ENTRY _____

PROVIDE TRUNK CABLE JACKET DISTANCE MARKINGS AT ENTRY TO VAULT AND AT ENTRY TO OUTDOOR FIBER SPLICE ENCLOSURE

FACTORY TERMINATED FIBER OPTIC PATCH/PIGTAIL PANEL

SFP1 SFP2 GIGE SERV PORT ETHERNET PORTS

FO ETHERNET TRANSPORT

ETHERNET/ SERIAL CONVERTER 1 2 3 4

RS232 ETHERNET/ SERIAL CONVERTER
FO ETHERNET TRANSPORT SFP1 SFP2
ETHERNET CABLE

1 3 2 4 RTMC NET CISCO 3750 G-24

ETHERNET SWITCH

COMMON ETHERNET EQUIPMENT

EXISTING FO CABLE SPLICE POINT

1 2 3 4 5 6

FIBER OPTIC PIGTAIL SPLICE DIAGRAM

(SPLICE UNUSED FIBERS TOGETHER IN THE SPLICE VAULT SO THAT THE FIBERS CAN BE TESTED)

DATA LINK RX2 RX1 TX2 TX1

FORCE TRANS. MODEL 2869 DATA LINK

TX1/RX1 DATA LINK TX2/RX2

OPTELECOM MODEM DATA LINK

E1 D1 DATA LINK E2 D2

EIA/TIA 232 DATA LINK

VIDEO/DATA TRANSCEIVER

VIDEO & DATA TRANSCEIVER TRANSMITTER

170 170 CONTROLLER

DMS CHANGEABLE MESSAGE SIGN

FLS FLASHER

RCS RAMP CONTROL SIGNAL

LDS LOOP DETECTOR STATION

LD LOOP DETECTOR"S"

ILCS INTELLIGENT LANE CONTROL SIGN

EXISTING CAMERA WITH PAN AND TILT UNIT

F&I CAMERA WITH PAN AND TILT UNIT

LED STYLE SIGN

DYNAMIC MESSAGE SIGN

FIBER OPTIC PATCHCORD

TWISTED PAIR INTERCONNECT

J1A J2A J3A J4A J5A J6A J7A J8A J9A J10A J11A J12A J13A J14A J15A J16A DV6000

DTS EQUIPMENT

RS232 1 2 3 4 5 6 7 8 LINE SHARER

RS 232 LINE SHARER

S.P. 179-020-031 S.P. 019-605-028

LEGEND FOR COMMUNICATION SCHEMATICS

REV. NO.	DATE: / /
REV. NO.	DATE: / /

CERTIFIED BY _____ LICENSED PROFESSIONAL ENGINEER LIC.NO. 26530 MAY 25 2012

STATE PROJ. NO. 1901-148 (TH 13) SHEET NO. SZ18 OF SZ23 SHEETS

c:\projectwise\pw_working\koobltom\d1341146\1901_164det.dgn

Koob1Tom MDROSFRWXD038 TWS
PLOTTED: 5/16/2012 10:23:27 AM

TH 169 @ CSAH 101
SHELTER (NE QUAD)
169-116.61

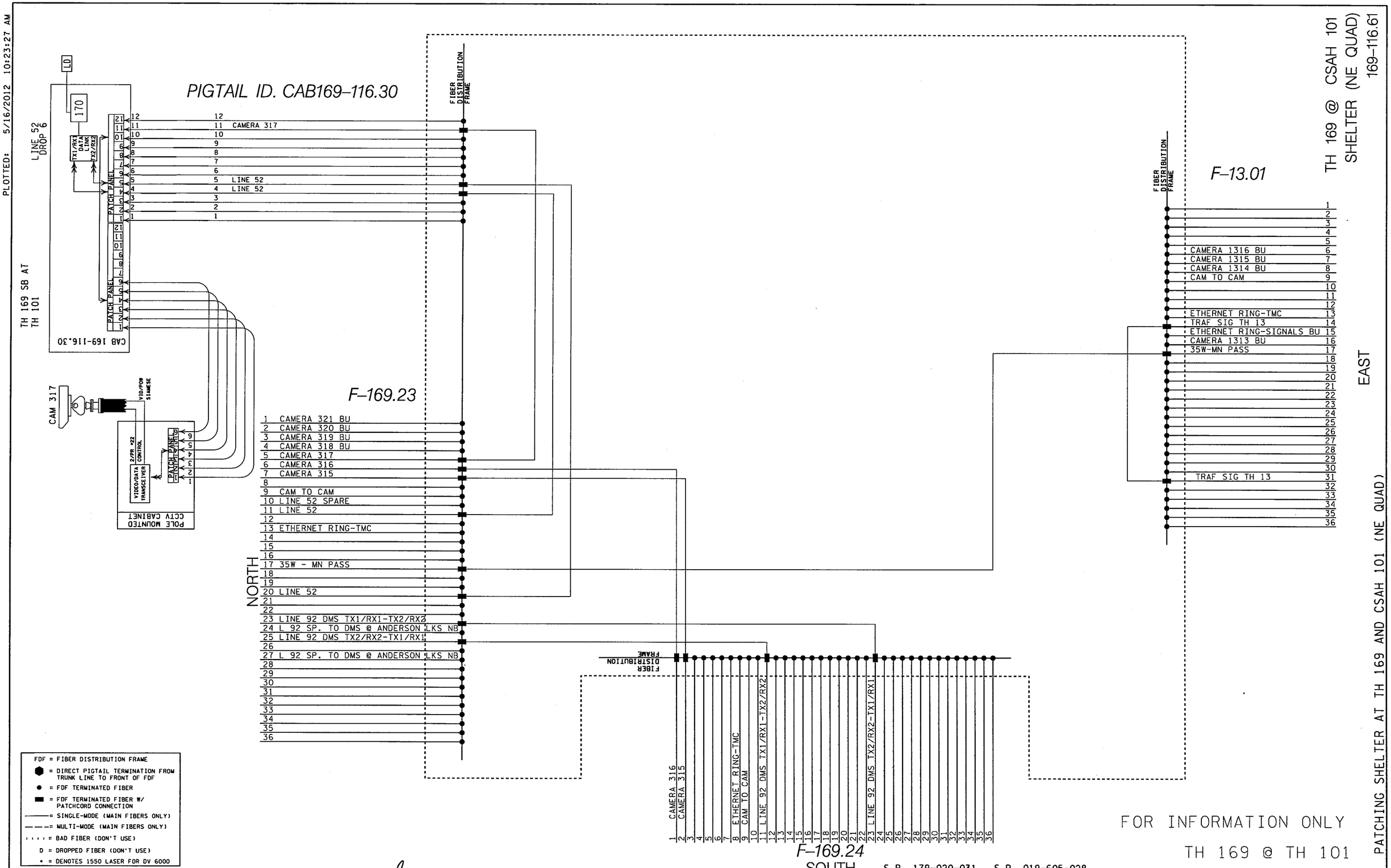

FOR INFORMATION ONLY

TH 169 @ TH 101

S.P. 179-020-031 S.P. 019-605-028

PATCHING SHELTER AT TH 169 AND CSAH 101 (NE QUAD)

FDF = FIBER DISTRIBUTION FRAME
⬢ = DIRECT PIGTAIL TERMINATION FROM TRUNK LINE TO FRONT OF FDF
● = FDF TERMINATED FIBER
■ = FDF TERMINATED FIBER W/ PATCHCORD CONNECTION
——— = SINGLE-MODE (MAIN FIBERS ONLY)
— — — = MULTI-MODE (MAIN FIBERS ONLY)
, , , , = BAD FIBER (DON'T USE)
D = DROPPED FIBER (DON'T USE)
* = DENOTES 1550 LASER FOR DV 6000

REV. NO. B	DATE: 02/16/11
REV. NO. C	DATE: 02/02/12

CERTIFIED BY _____ LICENSED PROFESSIONAL ENGINEER LIC.NO. 26530 MAY 25 2012

STATE PROJ. NO. 1901-148 (TH 13) SHEET NO. SZ19 OF SZ23 SHEETS

PLOTTED: 6/13/2012 11:21:54 AM Koob1Tom MDROSFRWXD038 TMS

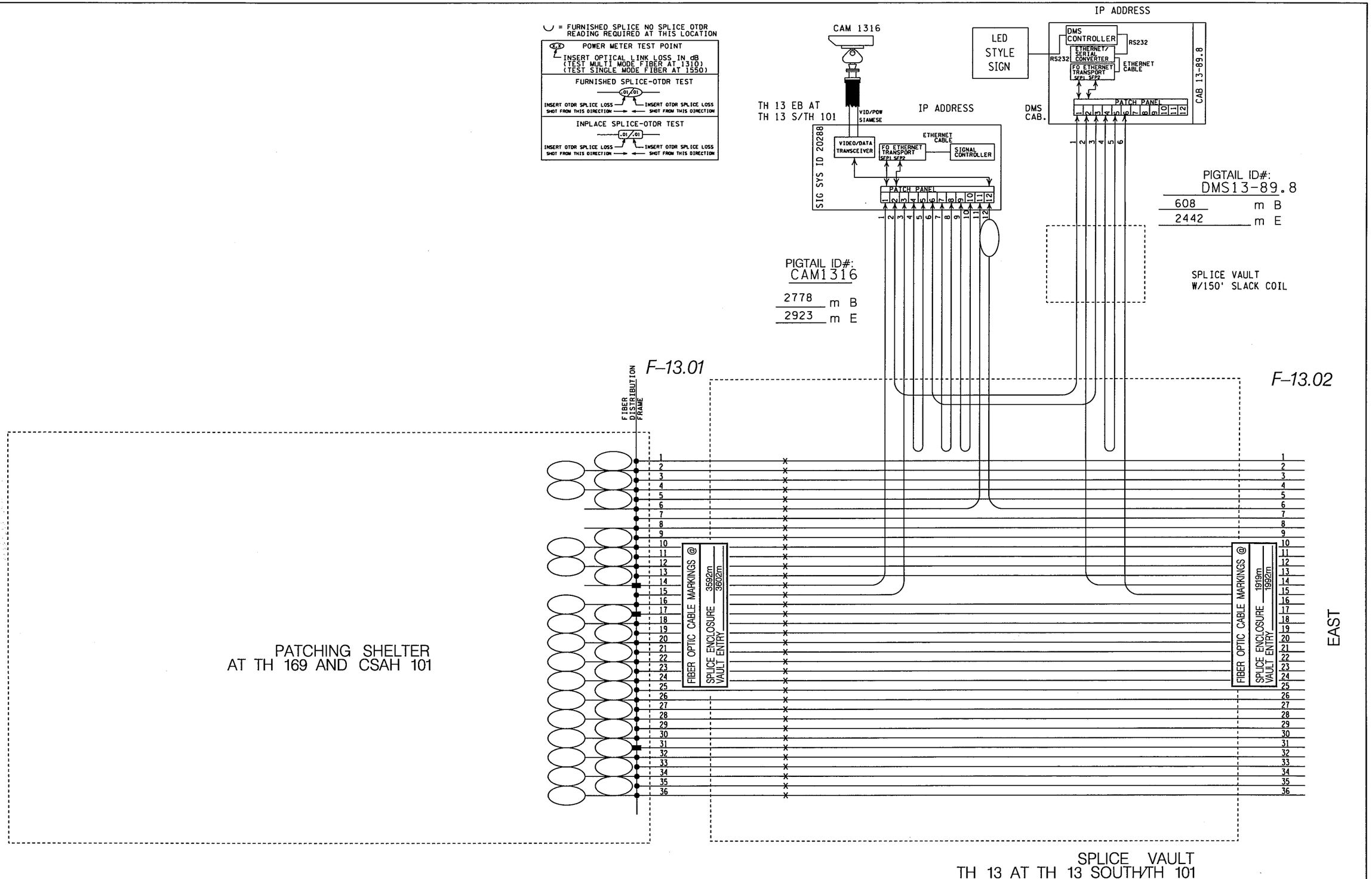

S.P. 179-020-031 S.P. 019-605-028

REV. NO. A	DATE: 06/02/11
REV. NO.	DATE: / /

CERTIFIED BY _____ LICENSED PROFESSIONAL ENGINEER LIC.NO. 26530 MAY 25 2012

STATE PROJ. NO. 1901-148 (TH 13) SHEET NO. SZ20 OF SZ23 SHEETS

c:\projectwise\pw_working\koob1tom\d1341146\1901_148schematics.dgn

Koob1Tom MDROSFRWXD038 TMS
PLOTTED: 6/11/2012 10:46:15 AM

◡ = FURNISHED SPLICE NO SPLICE OTDR READING REQUIRED AT THIS LOCATION

POWER METER TEST POINT
INSERT OPTICAL LINK LOSS IN dB
(TEST MULTI MODE FIBER AT 1310)
(TEST SINGLE MODE FIBER AT 1550)

FURNISHED SPLICE-OTDR TEST
.01/.01
INSERT OTDR SPLICE LOSS SHOT FROM THIS DIRECTION → ← INSERT OTDR SPLICE LOSS SHOT FROM THIS DIRECTION

INPLACE SPLICE-OTDR TEST
.01/.01
INSERT OTDR SPLICE LOSS SHOT FROM THIS DIRECTION → ← INSERT OTDR SPLICE LOSS SHOT FROM THIS DIRECTION

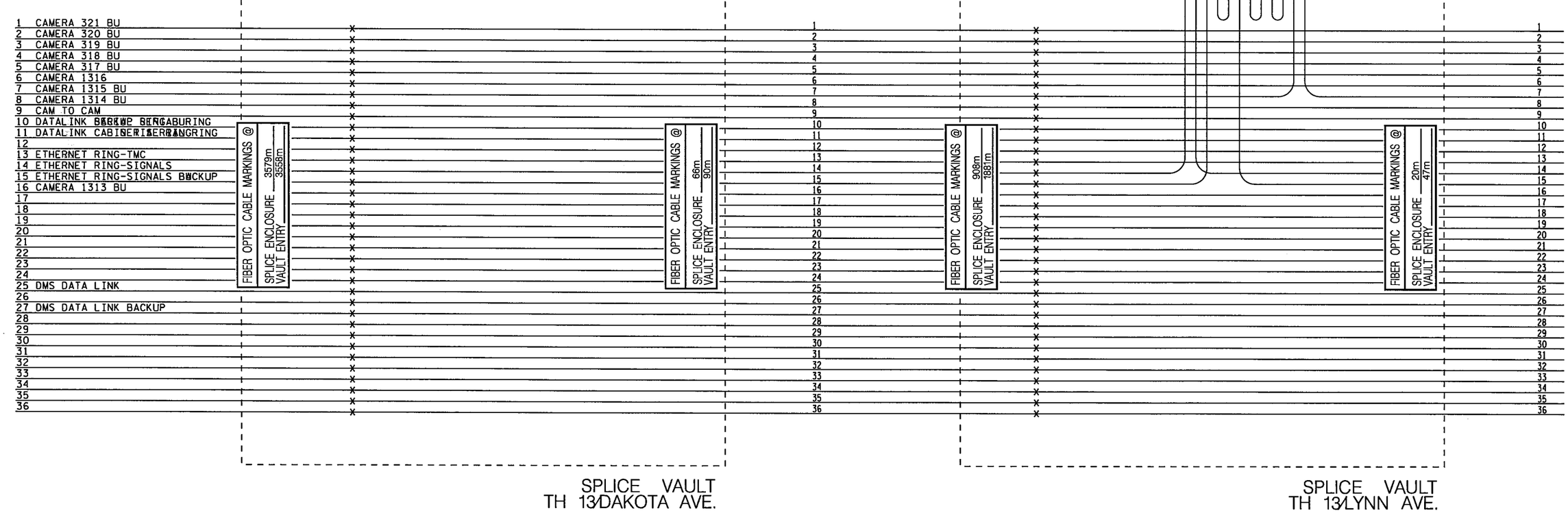

S.P. 179-020-031 S.P. 019-605-028

REV. NO. A	DATE: 06/02/11
REV. NO.	DATE: / /

CERTIFIED BY _____ LICENSED PROFESSIONAL ENGINEER LIC.NO. 26530 MAY25 2012

STATE PROJ. NO. 1901-148 (TH 13) SHEET NO. SZ21 OF SZ23 SHEETS

c:\projectwise\pw_working\koobitam\d1341146\1901_148schematics.dgn

Koob1Tom MDROSFRWXD038 TMS
PLOTTED: 6/11/2012 10:44:57 AM

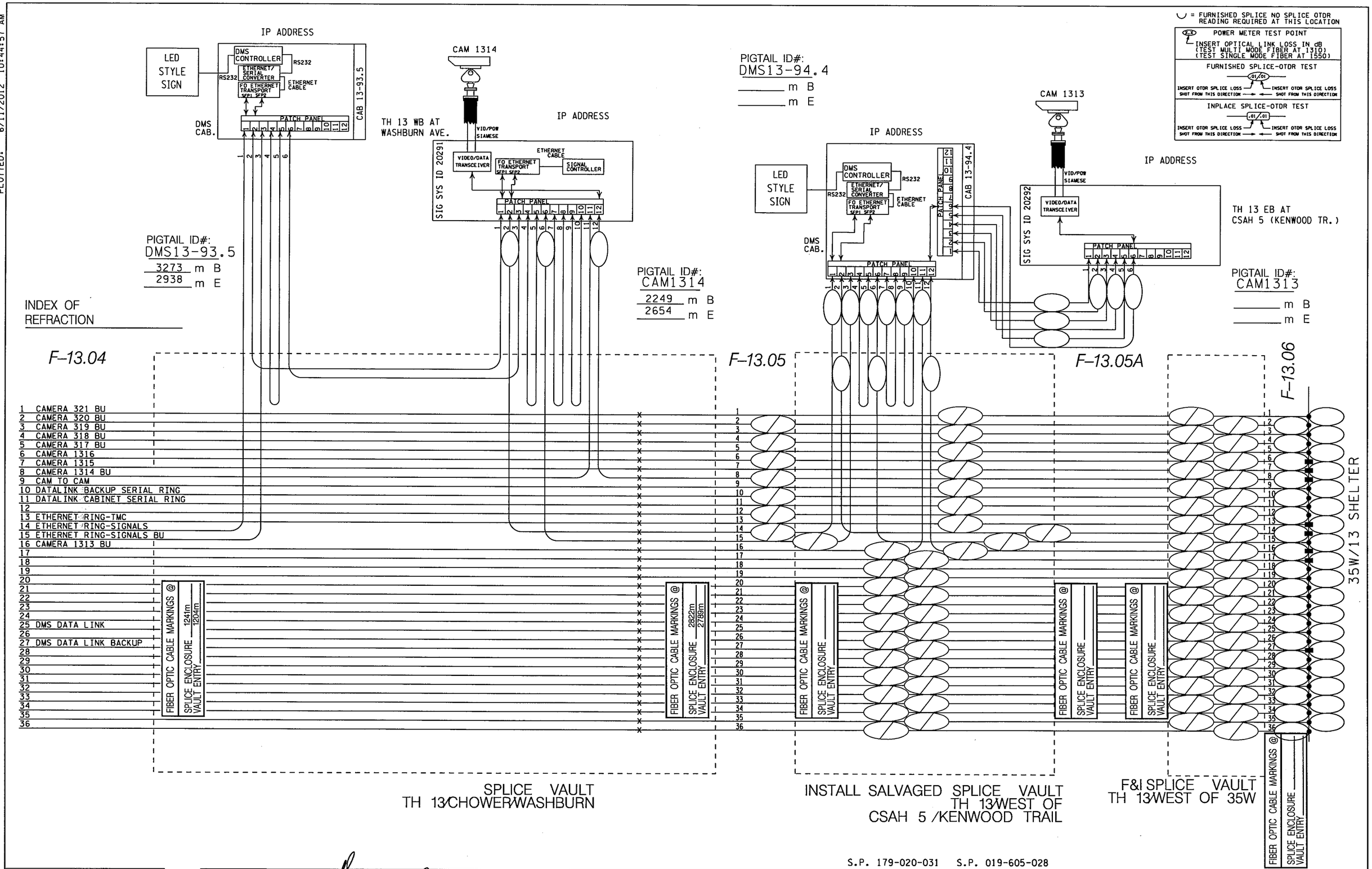

S.P. 179-020-031 S.P. 019-605-028

REV. NO. A	DATE: 06/02/11
REV. NO.	DATE: / /

CERTIFIED BY _____ LICENSED PROFESSIONAL ENGINEER LIC.NO. 26530 MAY 25 2012

STATE PROJ. NO. 1901-148 (TH 13) SHEET NO. SZ22 OF SZ23 SHEETS

c:\projectwise\pw_working\koob1tom\d1341146\1901_148schematics.dgn

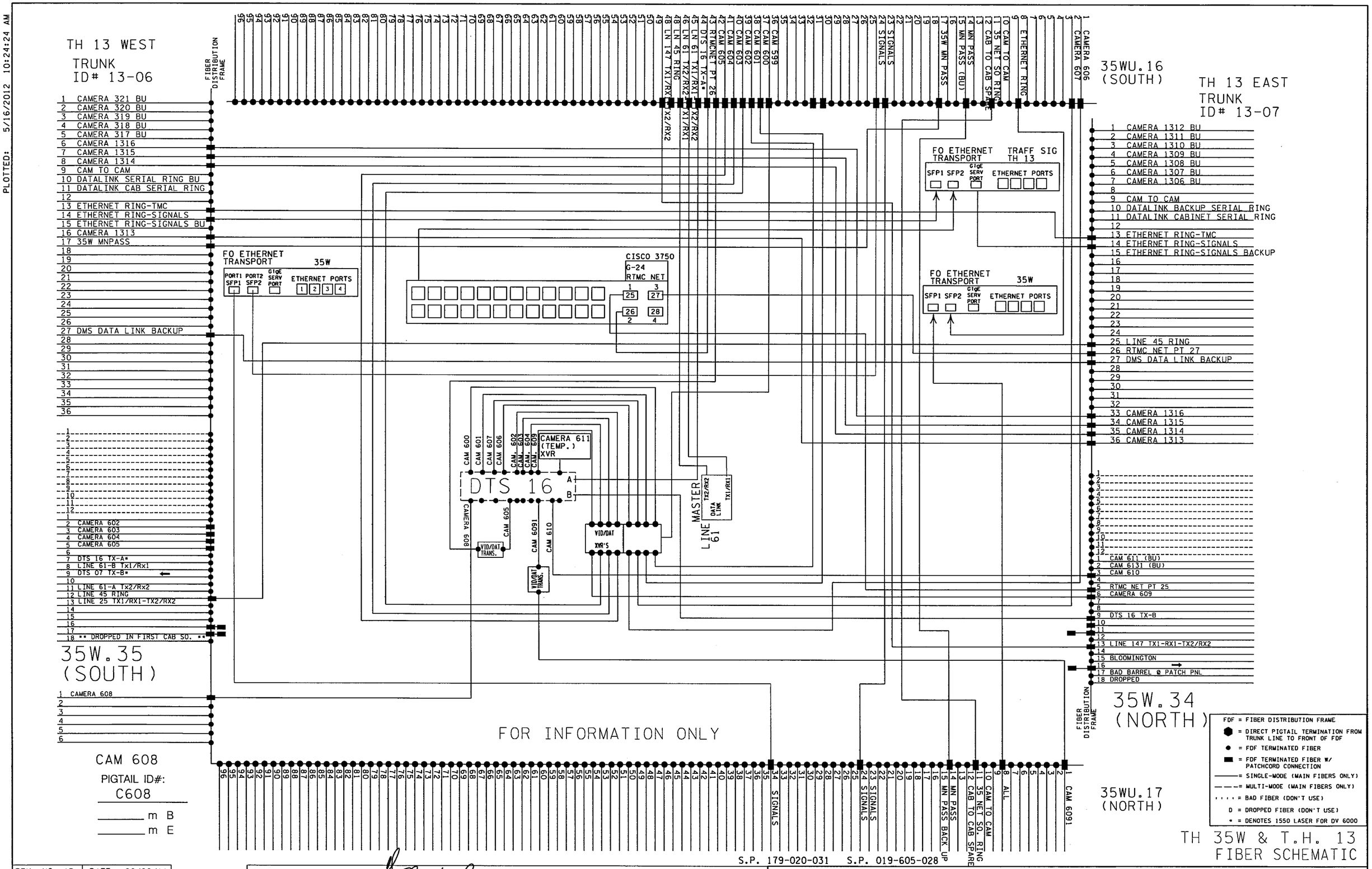

TH 35W & T.H. 13
FIBER SCHEMATIC

REV. NO. AP	DATE: 06/06/11
REV. NO. AO	DATE: 05/02/11

CERTIFIED BY [signature] LICENSED PROFESSIONAL ENGINEER LIC.NO. 26530 MAY 25 2012

STATE PROJ. NO. 1901-148 (TH 13) SHEET NO. SZ23 OF SZ23 SHEETS

TRAFFIC CONTROL SIGNAL SYSTEMS AND INTERCONNECT

T.H. 13 AT THE INTERSECTIONS OF: C.S.A.H. 5 (KENWOOD TRAIL) NORTH RAMP
C.S.A.H. 5 (KENWOOD TRAIL) SOUTH RAMP
C.S.A.H. 5 AT WILLIAMS DRIVE/GREENWOOD DRIVE
WILLIAMS DRIVE AT MORGAN AVENUE

ABBREVIATIONS

APS	ACCESSIBLE PEDESTRIAN SIGNAL
AWF	ADVANCE WARNING FLASHER
C.D.	COUNT DOWN
D2-1 (e.g.)	DETECTOR (PHASE 2, NO. 1)
DEG	DEGREES
DWK	DON'T WALK
EQ.G	EQUIPMENT GROUND
EVP	EMERGENCY VEHICLE PRE-EMPTION
F&I	FURNISH AND INSTALL
FL	FLASH/FLASHING
FYA	FLASHING YELLOW ARROW
FYLA	FLASHING YELLOW LEFT ARROW
GLA	GREEN LEFT ARROW
GRN	GREEN INDICATION
GR. RD.	GROUND ROD
GRA	GREEN RIGHT ARROW
GTA	GREEN THRU ARROW
HH	HANDHOLE
HPS	HIGH PRESSURE SODIUM
IND	INDICATION
IMC	INTERMEDIATE METAL CONDUIT
INP	INPLACE
INS. GR.	INSULATED GROUND
JB	JUNCTION BOX
LED	LIGHT EMITTING DIODE
LUM	LUMINAIRE
NEU	NEUTRAL
NMC	NONMETALLIC CONDUIT
P1-1 (e.g.)	PEDESTRIAN INDICATION (PHASE 1, NO. 1)
PB	PUSH BUTTON
PB2-1 (e.g.)	PUSH BUTTON (PHASE 2, NO. 1)
PEC	PHOTOELECTRIC CELL
PED	PEDESTRIAN
PVC	POLYVINYL CHLORIDE (CONDUIT)
RED	RED INDICATION
R&S	REMOVE AND SALVAGE
RLA	RED LEFT ARROW
RSC	RIGID STEEL CONDUIT
S&I	SALVAGE AND INSTALL
SOP	SOURCE OF POWER
SPR	SPARE
STA	STATION
WLK	WALK
YEL	YELLOW INDICATION
YLA	YELLOW LEFT ARROW
YRA	YELLOW RIGHT ARROW

SYMBOLS

- EQ.G CONNECTION
- EVP CONFIRMATORY LIGHT
- EVP DETECTOR
- EVP DETECTOR AND CONFIRMATORY LIGHT
- FIBER OPTIC VAULT
- LUMINAIRE NO.
- SIGNAL BASE NO.
- SIGNAL FACE NO./FLASHER FACE NO.
- BARREL MOUNT BASE NO.
- WOOD POLE NO.
- SPLICE
- VIDEO DETECTION
- MICROWAVE DETECTION
- SONIC DETECTION

FOR PLANS AND UTILITIES SYMBOLS SEE TECHNICAL MANUAL

TABULATED QUANTITIES CHART

SS

ITEM NO.	DESCRIPTION	UNIT	ESTIMATED QUANTITIES	S.P. 1901-148 (STATE)	S.P. 019-605-028 (COUNTY)	S.P. 179-020-031 (CITY)
2104	HAUL SALVAGED MATERAL	LUMP SUM	1	1		
2565	TRAFFIC CONTROL SIGNAL SYSTEM A	SIG SYS	1		0.5	0.5
2565	TRAFFIC CONTROL SIGNAL SYSTEM B	SIG SYS	1	0.5	0.5	
2565	TRAFFIC CONTROL SIGNAL SYSTEM C	SIG SYS	1	0.25	0.25	0.5
2565	EMERGENCY VEHICLE PREEMPTION SYSTEM A	LUMP SUM	1		0.5	0.5
2565	EMERGENCY VEHICLE PREEMPTION SYSTEM B	LUMP SUM	1	0.5	0.5	
2565	EMERGENCY VEHICLE PREEMPTION SYSTEM C	LUMP SUM	1	0.25	0.25	0.5
2565	TRAFFIC CONTROL INTERCONNECTION	LUMP SUM	1	0.21	0.42	0.37
2565	REVISE SIGNAL SYSTEM	SYSTEM	1			1

INDEX

SHEET NO.	DESCRIPTION
SS1	SIGNATURE, INDEX, TABULATED QUANTITIES, ABBREVIATIONS, SYMBOLS, AND STANDARD PLATES
SS2 - SS14	DETAILS
SS15 - SS17	TRAFFIC CONTROL SIGNAL SYSTEM "A"
SS18 - SS20	TRAFFIC CONTROL SIGNAL SYSTEM "B"
SS21 - SS23	TRAFFIC CONTROL SIGNAL SYSTEM "C"
SS24 - SS26	REVISE SIGNAL SYSTEM
SS27 - SS31	"FOR INFORMATION ONLY"

I HEREBY CERTIFY THAT SHEETS SS1 THROUGH SS31 OF THIS PLAN WERE PREPARED BY ME OR UNDER MY DIRECT SUPERVISION AND THAT I AM A DULY LICENSED PROFESSIONAL ENGINEER UNDER THE LAWS OF THE STATE OF MINNESOTA.

MICHAEL GERBENSKE LIC. NO. 19863 DATE 6-12-2012

DESIGNER EDWARD ANDRAJACK JR., GLEN SIMKUNAS, STEPHEN KURALLE

STANDARD PLATES - SIGNAL SYSTEMS

THE FOLLOWING STANDARD PLATES, APPROVED BY THE FEDERAL HIGHWAY ADMINISTRATION, SHALL APPLY ON THIS PROJECT

PLATE NO.		DESCRIPTION
▷ 7036	G	PEDESTRIAN CURB RAMP PERPENDICULAR DESIGN
▷ 7038	A	DETECTABLE WARNING SURFACE TRUNCATED DOMES
▷ 7113	A	CONCRETE APPROACH NOSE DETAIL
▷ 8110	E	TRAFFIC SIGNAL BRACKETING (POLE MOUNTED)
▷ 8111	E	TRAFFIC SIGNAL BRACKETING (PEDESTAL MOUNTED)
► 8112	G	PEDESTAL FOUNDATION
► 8114	A	PVC HANDHOLE/PULLBOX
▷ 8117	F	PRECAST CONCRETE HAND HOLE
▷ 8118	D	SERVICE EQUIPMENT AND POLE
► 8119	C	GROUND MOUNTED CABINET FOUNDATION
► 8120	P	POLE FOUNDATION (PA-85)
► 8121	G	TRANSFORMER BASE AND POLE BASE PLATE
► 8122	F	PEDESTAL AND PEDESTAL BASE
► 8123	G	POLE AND MAST ARM
► 8126	J	POLE FOUNDATION (PA90 AND PA100)
▷ 8130	E	SAW CUT LOOP DETECTORS
► 8132	B	PREFORMED RIGID PVC CONDUIT LOOP DETECTOR

► STANDARD PLATES APPLICABLE TO THIS PROJECT

DRAWN BY: SJK	REVISED BY:	REVISED BY:	AS BUILT BY:
CKD BY: EJA DATE: 05-09-12	CKD BY: DATE:	CKD BY: DATE:	CKD BY: DATE:

SYSTEM ID: 39427,39428,39429,39447

S.P. NO.179-020-031, SP 019-605-028

SIGNATURE, INDEX, TABULATED QUANTITIES, ABBREVIATIONS, SYMBOLS AND STANDARD PLATES

STATE PROJ. NO. 1901-148 (T.H.13)

SHEET NO. SS1 OF SS31 SHEETS

PLOTTED/REVISED: 6/12/2012
DISTRICT #: METRO
IPLOT NAME: signature sheet
PATH & FILENAME: IP_PWP-d144972AT39429_sgl.dgn

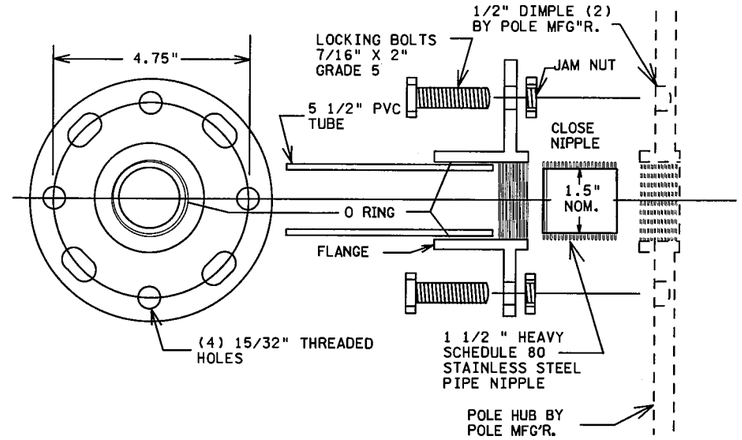

THREADED HUB AND FLANGE POLE ADAPTOR

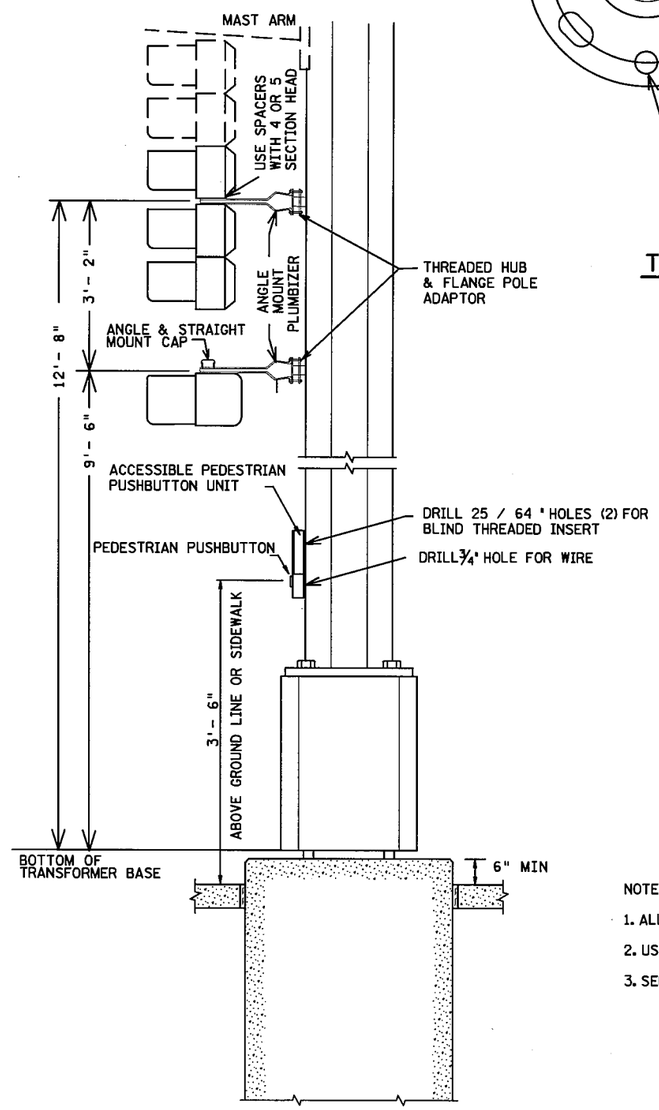

TYPICAL SIGNAL POLE MOUNTING

NOT TO SCALE

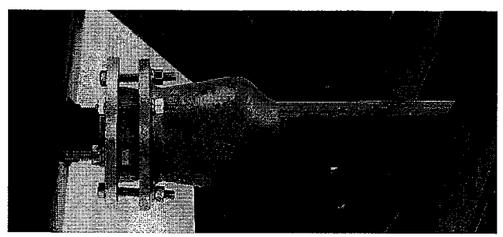

NOTE:

1. ALL THREADED SURFACES TO BE COATED WITH ANTI-SEIZE COMPOUND.
2. USE SIGNAL HEAD MOUNTED SPACERS FOR 4 & 5 SECTION POLY HEADS.
3. SEE STANDARD PLATE NUMBER 8123 FOR ADDITIONAL SIGNAL POLE DETAILS.

BY	DATE	REVISIONS

SYSTEM ID:39427,39428,39429 T.E.
METER ADDRESS:
MASTER ID: T.E.

POLE MOUNT DETAIL

S.P. NO. 179-020-031, SP 019-605-028 | DRAWN BY:SJK | CKD BY:EJA | DATE:05-09-12

CERTIFIED BY Michael P. Gilbertsky LICENSED PROFESSIONAL ENGINEER | LIC. NO. 19863 | DATE: 06-12-12

STATE PROJ.NO. 1901-148 (T.H.13) | SHEET NO. SS2 OF SS31 SHEETS

PLOTTED/REVISED: 6/12/2012

DISTRICT #: METRO
IPLOT NAME: pole mount detail
PATH & FILENAME: IP_PWP:d1449724\T39429_sgl.dgn

PEDESTRIAN PUSH BUTTON STATION

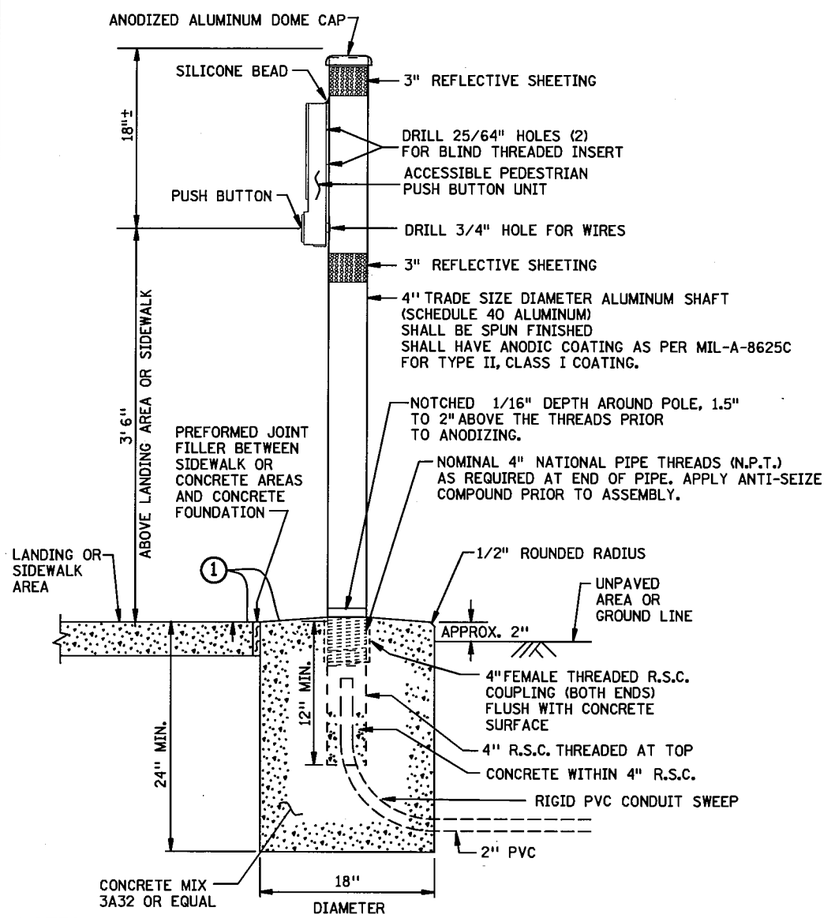

NOTES:

- PLACEMENT AND ORIENTATION OF THE PUSH BUTTON STATION IS CRITICAL. MOUNT THE BUTTON SO THAT THE FACE IS PARALLEL WITH THE ASSOCIATED CROSSWALK. SCREW IN POST TO A TIGHTENED POSITION BEFORE MOUNTING ACCESSIBLE PEDESTRIAN PUSH BUTTON UNIT TO THE POST.
- BLIND THREADED INSERTS (RIVET NUT) MUST BE INSERTED USING MANUFACTURERS SPECIFIC INSTALLATION TOOL. NO OTHER METHOD OF INSTALLATION IS ACCEPTABLE.
- BLIND THREADED INSERTS SHALL BE ZINC PLATED STEEL WITH 1/4 - 20 UNC THREADS. INSERT SHALL BE SUITABLE FOR USE ON A MOUNTING SURFACE WALL THICKNESS OF .337". APPROVED BLIND THREADED INSERTS CAN BE FOUND ON THE MN/DOT QUALIFIED PRODUCTS LIST.
- MOUNTING BOLTS SHALL BE 1/4 - 20 STAINLESS STEEL. APPLY BRUSH ON ANTI SEIZE COMPOUND TO BOLTS PRIOR TO ASSEMBLY.
- APPLY A BEAD OF 100% SILICONE SEALANT ALONG THE TOP OF THE PUSH BUTTON UNIT WHERE IT COMES IN CONTACT WITH THE 4" POST.
- THE REFLECTIVE SHEETING SHALL BE WHITE AT INTERSECTION CORNERS AND SHALL BE YELLOW WHEN USED IN CENTER MEDIANS. SEE MN/DOT SIGNING QUALIFIED PRODUCTS LIST (QPL) FOR APPROVED TUBE DELINEATOR SHEETING.
- ANTI-SEIZE COMPOUND MUST BE USED ON THE MOUNTING BOLTS WHEN THE PEDESTRIAN SIGN IS MOUNTED.

(1) THE CONCRETE FOUNDATION SHALL BE CAST INPLACE AND CONSTRUCTED FLUSH WITH THE SURROUNDING SIDEWALK.

GUIDELINES FOR LOCATING APS PUSH BUTTONS:

- THIS IS A GENERAL DETAIL INTENDED TO SHOW THE REQUIREMENTS OF APS PUSH BUTTON LOCATION. FOR PROJECT SPECIFIC DETAILS REGARDING PEDESTRIAN RAMP LAYOUT, SEE THE PEDESTRIAN CURB RAMP AND SIDEWALK DETAILS.
- BUTTONS SHALL BE WITHIN 5' OF THE OUTSIDE EDGE OF THE CROSSWALK.
- THE FACE OF THE BUTTON SHALL BE PARALLEL WITH THE CROSSWALK.
- A MIN. 4'X4' LANDING AREA SHALL BE PROVIDED ADJACENT TO EACH BUTTON.
- BUTTONS SHALL BE WITHIN 10' OF THE BACK OF CURB OR EDGE OF ROADWAY.
- BUTTONS SHALL BE AT LEAST 10' APART.

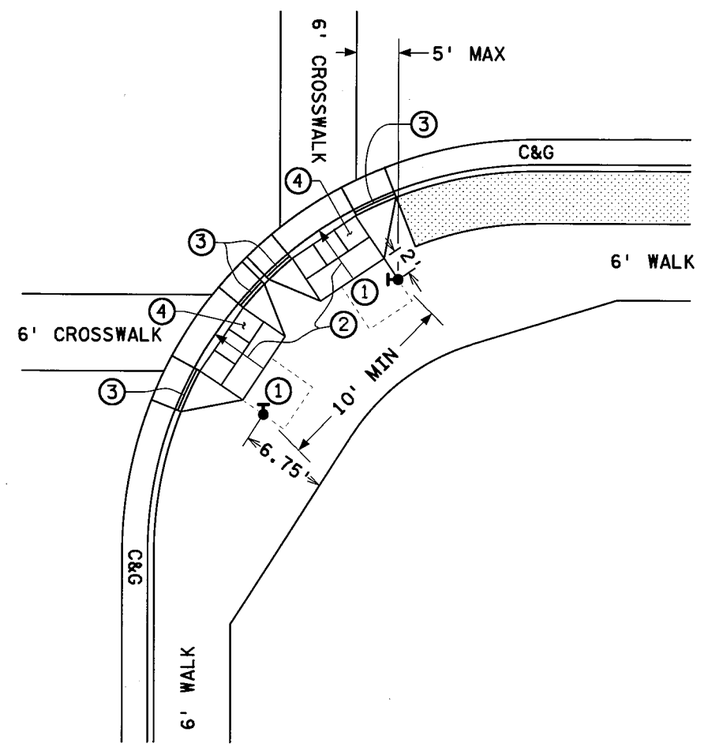

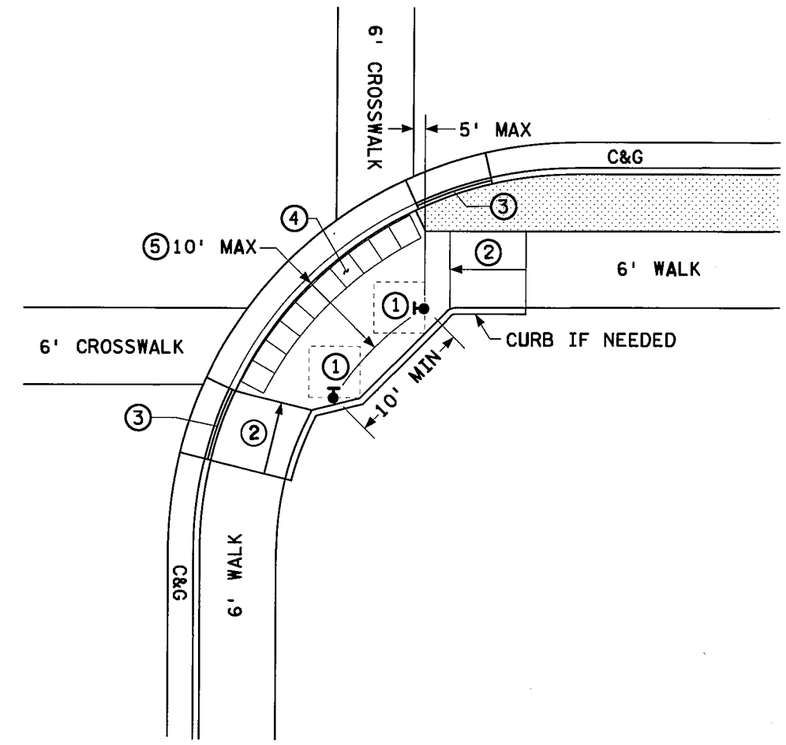

(1) 4'X4' MINIMUM LANDING AREA ADJACENT TO PUSH BUTTON. (2% SLOPE MAX.)

(2) RAMP - SLOPE (5% PREFERRED 8% MAX).

(3) CURB TAPER SECTION AT 1:10 (10%) (HEIGHT OF CURB IS TAPERED TO 0").

(4) DETECTABLE WARNING SURFACE (TRUNCATED DOMES) - RADIUS SECTIONS WHERE SPECIFIED.

(5) DISTANCE FROM THE BACK OF CURB TO PUSH BUTTON STATION.

TYPICAL APS PEDESTRIAN PUSH BUTTON LOCATION

BY	DATE	REVISIONS

SYSTEM ID: 39427,39428,39429 T.E.
METER ADDRESS:
MASTER ID: T.E.

ACCESSIBLE PEDESTRIAN SIGNAL (APS)
PEDESTRIAN PUSH BUTTON STATION
TYPICAL APS PUSH BUTTON LOCATION DETAIL

S.P. NO. 179-020-031, SP 019-605-028 | DRAWN BY: SJK | CKD BY: EJA | DATE: 05-09-12
CERTIFIED BY Michael P. Gibrowski LICENSED PROFESSIONAL ENGINEER LIC. NO. 19863 DATE: 06-12-12
STATE PROJ.NO. 1901-148 (T.H.13) SHEET NO. SS3 OF SS31 SHEETS

PLOTTED/REVISED: 6/12/2012
DISTRICT #: METRO
IPLOT NAME: accessible pedestrain detail
PATH & FILENAME: IP_PWP:dl449T24VT39429_sgl.dgn

PLOTTED/REVISED: 6/12/2012

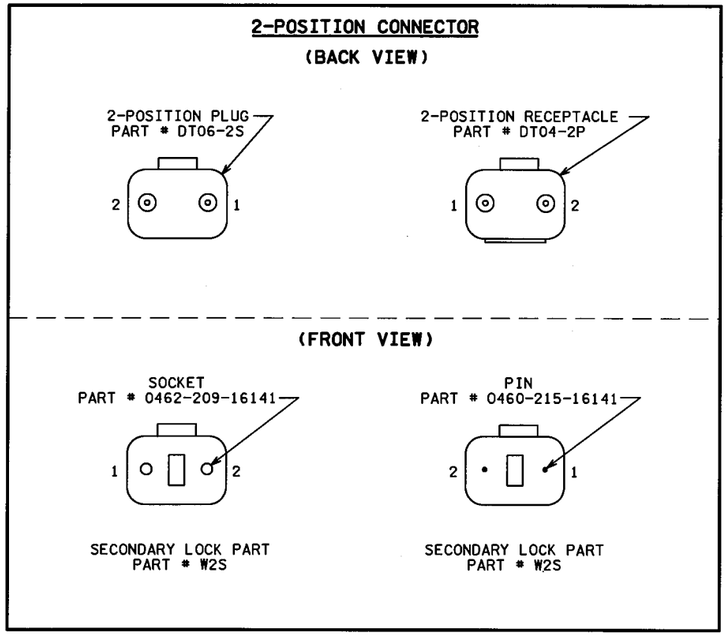

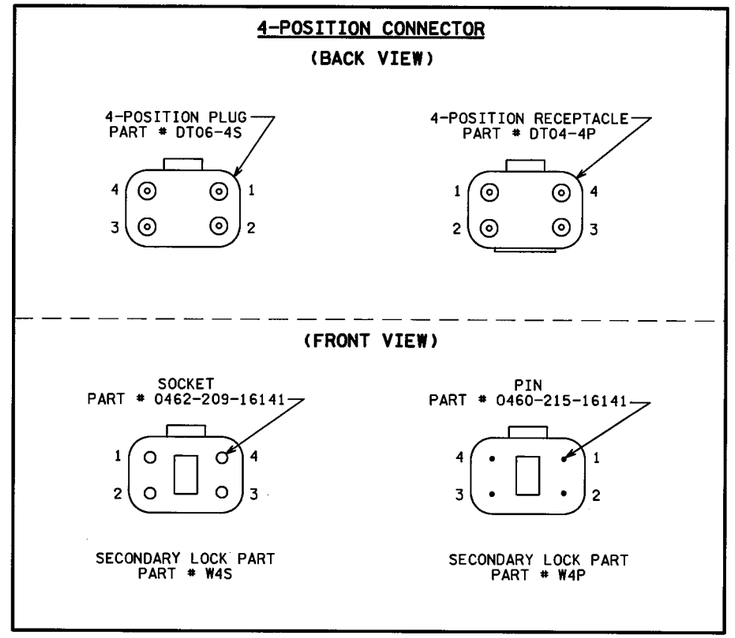

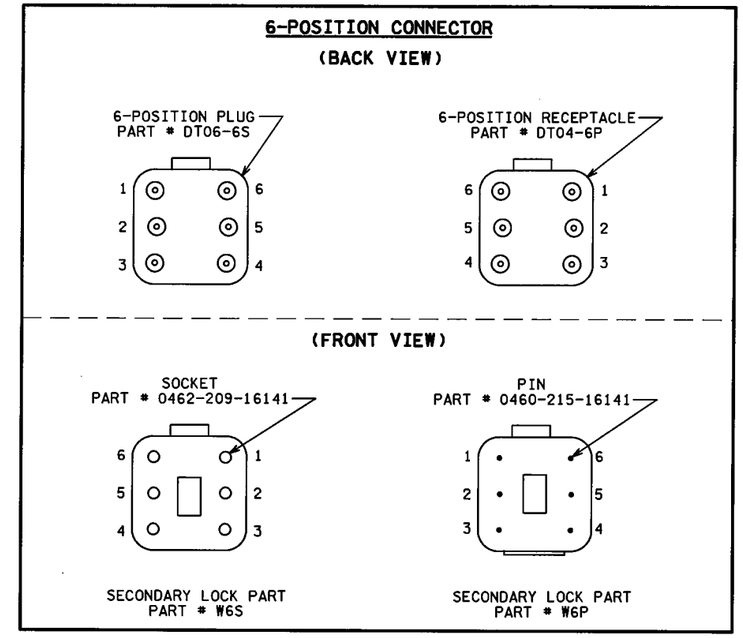

TABLE 1 — 2 Position DT Connector (As Needed)

Wire to Control Cabinet	Connector pin #	Wire to Signal Indication	Signal Indication
BLK	1	BLK	PB (If Required)
WH or CL	2	WH or CL	NEU

TABLE 2a — 4 Position DT Connector (3 Section Head/DWK/WLK)

Wire to Control Cabinet	Connector pin #	Wire to Signal Indication	Signal Indication
R or R/BLK or BLK	1	R	RED or DWK
O or O/BLK or BLK/WH or BLK	2	BLK/R	YEL or WLK
BL or BL/BLK or BLK/R or BLK	3	BLK	GRN or SPR
WH or WH/BLK or WH/R	4	WH	NEU

TABLE 3 — 6 Position DT Connector (4 and 5 Section Heads)

Wire to Control Cabinet	Connector pin #	Wire to Signal Indication	Signal Indication
R	1	R	RED
O	2	O	YEL
BL	3	BL	GRN
WH	4	WH	NEU
O/BLK or BLK/R (6/C)	5	BLK/R	YLA or FYLA
BL/BLK or BLK (6/C)	6	BLK	GLA

TABLE 2b — 4 Position DT Connector (Used with 3 Conductor Cable Only) (EVP LHT/LUM/Flasher)

Wire to Control Cabinet	Connector pin #	Wire to Signal Indication	Signal Indication
BLK	1	BLK	EVP LHT or LUM or RED or YEL
(Not Used)	2	(Not Used)	(Not Used) (See Note #8)
G	3	G	EQ.G
WH	4	WH	NEU

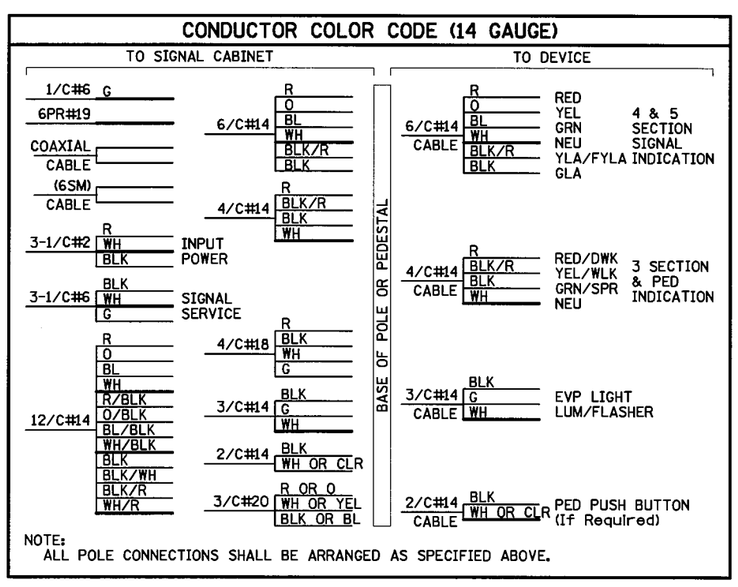

NOTES:

1. DT04-P RECEPTACLE SHALL BE TERMINATED TO THE WIRING HARNESS RUNNING FROM THE BASE/JUNCTION BOX OF THE POLE TO SIGNAL INDICATIONS.
2. DT06-_S PLUG SHALL BE TERMINATED TO THE CABLES RUNNING FROM THE TRAFFIC SIGNAL CABINET TO THE BASE/JUNCTION BOX OF THE POLE.
3. THERE SHALL BE A MINIMUM OF 24 INCHES OF SLACK ON EACH CABLE IN EVERY POLE BASE /JUNCTION BOX.
4. STRIP A MAXIMUM OF 6 INCHES OF THE OUTER JACKET OF EACH SIGNAL CABLE.
5. STRIP .250 INCHES OF INSULATION FROM EACH INDIVIDUAL CONDUCTOR.
6. CRIMP PINS OR SOCKETS USING RATCHETING TYPE CRIMPING TOOL HDT-48-00. NO OTHER CRIMPING TOOL WILL BE ALLOWED.
7. WIRES MUST BE TERMINATED AS DETAILED IN TABLES 1 THRU 3 DEPENDING ON WIRE COUNT.
8. ANY UNUSED PIN MUST HAVE A SEALING PLUG PLACED IN BOTH THE PLUG & RECEPTACLE (PART # 114017).
9. LABEL EACH HALF OF THE CONNECTOR (PLUG AND RECEPTACLE) WITH THE DEVICE DESIGNATION (AS INDICATED IN THE WIRING DIAGRAM) USING A PERMANENT BLACK MARKER.

Wire Color Code Key

R	Red
O	Orange
BL	Blue
WH	White
BLK	Black
BRN	Brown
CL	Clear
G	Green
R/BLK	Red with Black Stripe
O/BLK	Orange with Black Stripe
BL/BLK	Blue with Black Stripe
WH/BLK	White with Black Stripe
WH/R	White with Red Stripe
BLK/WH	Black with White Stripe
BLK/R	Black with Red Stripe

DISTRICT #: METRO
IPLOT NAME: connector detail
PATH & FILENAME: IP_PWP:d144972AT39429_sgl.dgn

BY	DATE	REVISIONS

SYSTEM ID:39427,39428,39429 T.E.
METER ADDRESS:
MASTER ID: T.E.

TRAFFIC SIGNAL POLE WIRING CONNECTOR DETAIL

S.P. NO. 179-020-031, SB 019-605-028 | DRAWN BY:SJK | CKD BY:EJA | DATE:05-09-12

CERTIFIED BY Michael P. Gilbreath LICENSED PROFESSIONAL ENGINEER LIC. NO. 19863 DATE: 06-12-12

STATE PROJ.NO. 1901-148 (T.H.13) SHEET NO. SS4 OF SS31 SHEETS

TYPICAL PAD WITH CONTROLLER CABINET AND SERVICE CABINET

SEE INTERSECTION LAYOUT FOR CABLE INFORMATION (NOT TO SCALE)

PLAN VIEW

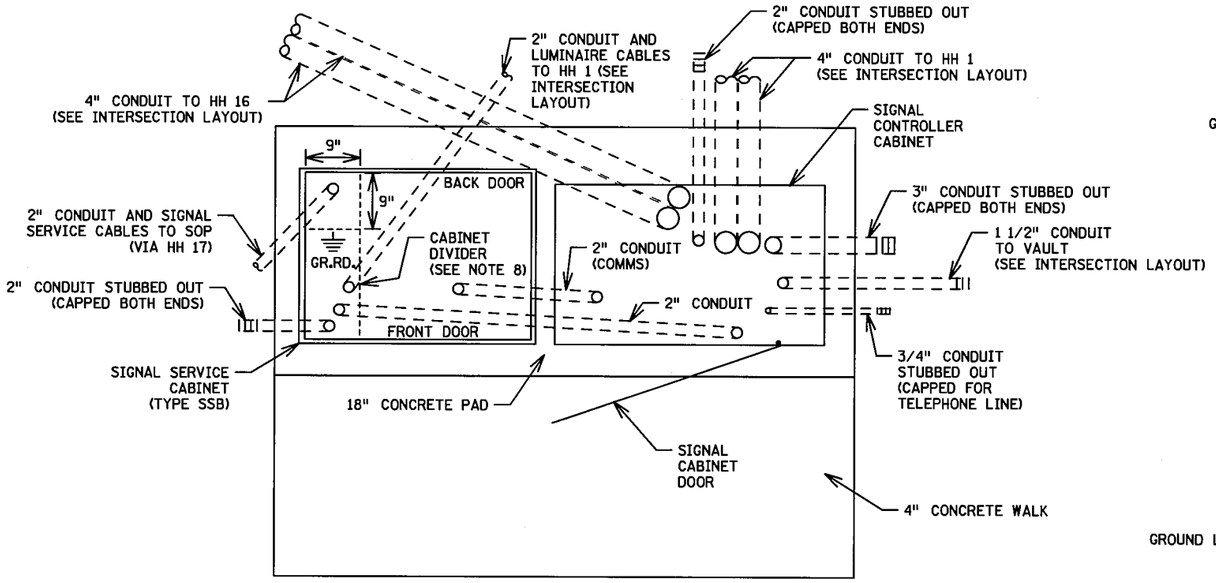

SIDE VIEW

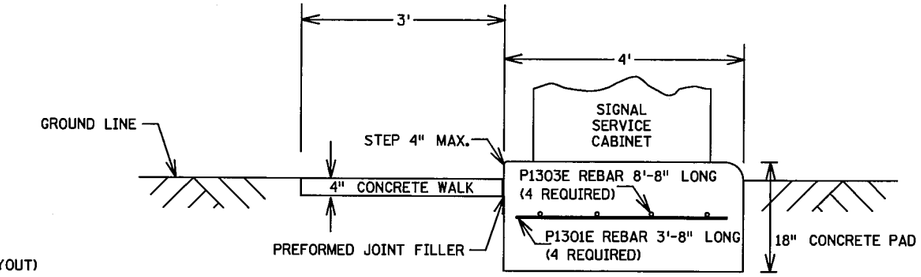

FRONT VIEW

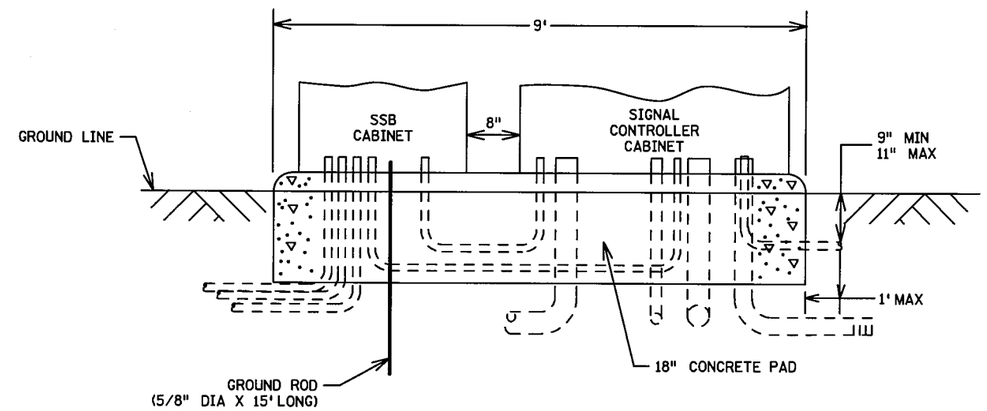

NOTES:

1. THE ANCHOR RODS, NUTS, WASHERS AND RUBBER GASKET FOR THE CONTROLLER CABINET SHALL BE FURNISHED BY MNDOT.
2. THE OUTER EDGE OF THE ENTIRE EQUIPMENT PAD AND CONCRETE WALK SHALL BE BEVELED OR CHAMFERED IN A NEAT MANNER AS DIRECTED BY THE ENGINEER.
3. THE TOP OF THE CONDUITS SHALL BE CAPPED AFTER INSTALLATION (UNTIL CABLES ARE PULLED IN).
4. CONDUIT SHALL PROJECT A MINIMUM OF 2" ABOVE THE CONCRETE AND SHALL BE LOCATED INSIDE THE CABINET WHERE DIRECTED BY THE ENGINEER, BUT SHALL NOT INTERFERE WITH THE CABINET FUNCTIONS (SUPPORTING MEMBERS, ETC.).
5. CONCRETE MIX 3A32 OR EQUAL SHALL BE USED FOR THE EQUIPMENT PAD AND SIDEWALK.
6. CONDUITS WITH BOTH ENDS TERMINATING WITHIN THE PAD SHALL NOT BE PLACED BELOW THE CONCRETE.
7. THE EXACT LOCATION OF CONDUITS WITHIN THE PAD SHALL BE DETERMINED BY THE ENGINEER IN THE FIELD.
8. CORRECT PLACEMENT OF CONDUIT TO THE LEFT OF THE CABINET DIVIDER IS CRITICAL.
9. ANCHOR RODS SHALL PROJECT A MINIMUM OF 3" ABOVE THE CONCRETE BUT SHALL NOT INTERFERE WITH THE CABINET FUNCTIONS (SUPPORTING MEMBERS, ETC.).
10. CABINETS TO BE CENTERED (LEFT & RIGHT) ON THE PAD.
11. BRUSH ON ANTI-SEIZE LUBRICANT MUST BE APPLIED TO ALL ANCHOR ROD THREADS PROTRUDING ABOVE THE CONCRETE PAD BEFORE THE CABINET IS SET.

S.S.B. SERVICE CABINET BOLT PATTERN

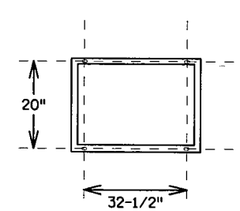

DIMENSION SHOWN ARE CENTER ROD TO CENTER ROD

CONTROLLER CABINET TYPE "P" & "R" BOLT PATTERN

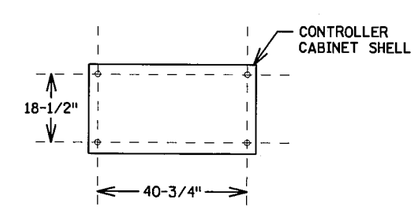

DIMENSION SHOWN ARE CENTER ROD TO CENTER ROD

BY	DATE	REVISIONS

SYSTEM ID: 39429 T.E. 5609
METER ADDRESS: 12755 COUNTY RD 5
MASTER ID: T.E.

EQUIPMENT PAD LAYOUT
TRAFFIC CONTROL SIGNAL SYSTEM A
TH 13 AT CSAH 5 (KENWOOD TRAIL) AT
WILLIAMS DRIVE/GREENWOOD DRIVE
IN BURNSVILLE, DAKOTA COUNTY

S.P. NO. 179-020-031, SP 019-605-028 | DRAWN BY: SJK | CKD BY: EJA | DATE: 05-09-12

CERTIFIED BY Michael P. Gibrosky LICENSED PROFESSIONAL ENGINEER LIC. NO. 19863 DATE: 06-12-12

STATE PROJ.NO. 1901-148 (T.H.13) SHEET NO. SS5 OF SS31 SHEETS

PLOTTED/REVISED: 6/12/2012
DISTRICT #: METRO
IPLOT NAME: controller cabinet
PATH & FILENAME: IP_PWP:d1449724\T39429_sgl.dgn

TYPICAL PAD WITH CONTROLLER CABINET AND SERVICE CABINET

SEE INTERSECTION LAYOUT FOR CABLE INFORMATION (NOT TO SCALE)

PLAN VIEW

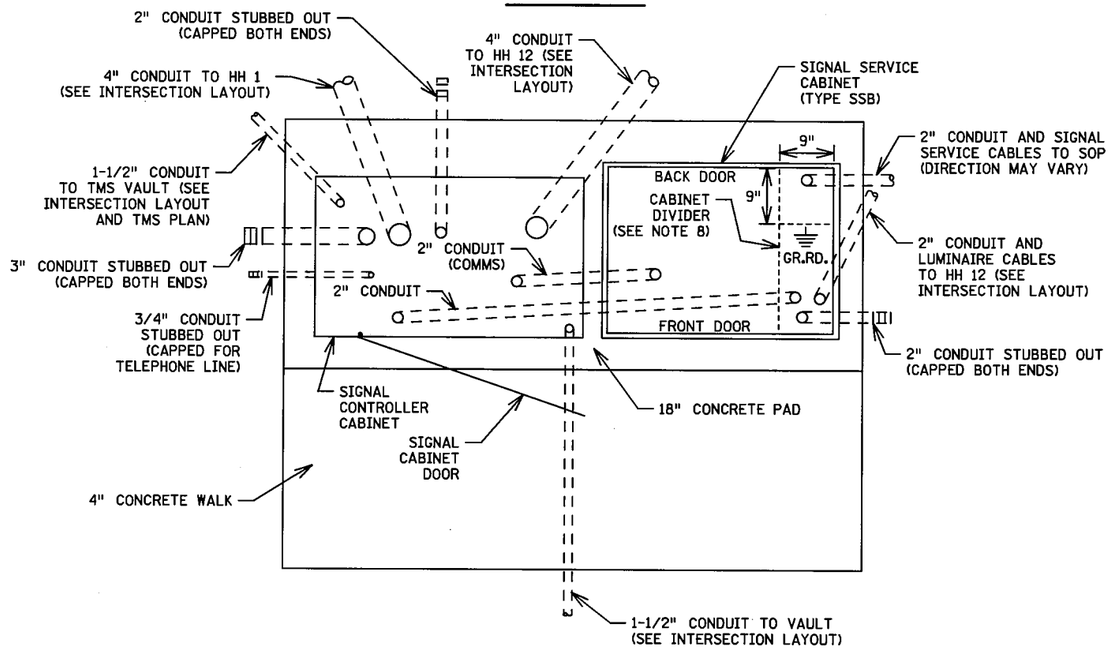

SIDE VIEW

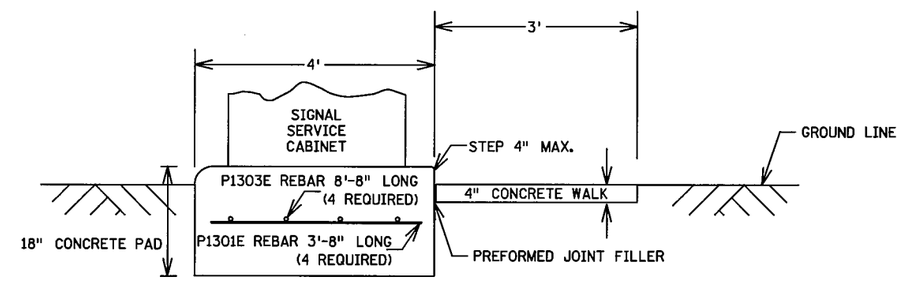

FRONT VIEW

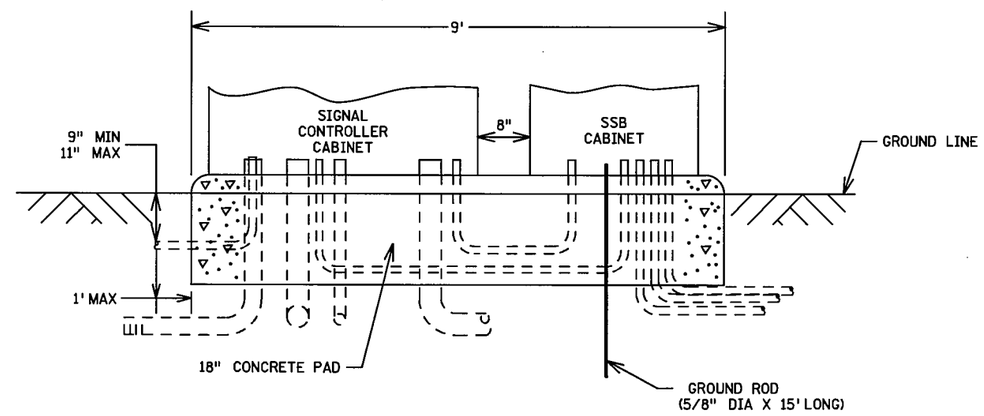

CONTROLLER CABINET TYPE "P" & "R" BOLT PATTERN

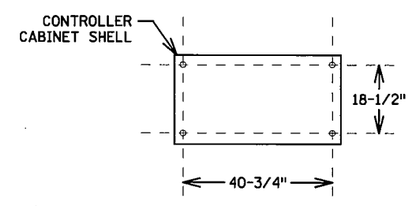

DIMENSION SHOWN ARE CENTER ROD TO CENTER ROD

S.S.B. SERVICE CABINET BOLT PATTERN

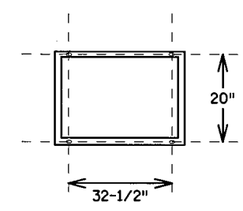

DIMENSION SHOWN ARE CENTER ROD TO CENTER ROD

NOTES:

1. THE ANCHOR RODS, NUTS, WASHERS AND RUBBER GASKET FOR THE CONTROLLER CABINET SHALL BE FURNISHED BY MNDOT.
2. THE OUTER EDGE OF THE ENTIRE EQUIPMENT PAD AND CONCRETE WALK SHALL BE BEVELED OR CHAMFERED IN A NEAT MANNER AS DIRECTED BY THE ENGINEER.
3. THE TOP OF THE CONDUITS SHALL BE CAPPED AFTER INSTALLATION (UNTIL CABLES ARE PULLED IN).
4. CONDUIT SHALL PROJECT A MINIMUM OF 2" ABOVE THE CONCRETE AND SHALL BE LOCATED INSIDE THE CABINET WHERE DIRECTED BY THE ENGINEER, BUT SHALL NOT INTERFERE WITH THE CABINET FUNCTIONS (SUPPORTING MEMBERS, ETC.).
5. CONCRETE MIX 3A32 OR EQUAL SHALL BE USED FOR THE EQUIPMENT PAD AND SIDEWALK.
6. CONDUITS WITH BOTH ENDS TERMINATING WITHIN THE PAD SHALL NOT BE PLACED BELOW THE CONCRETE.
7. THE EXACT LOCATION OF CONDUITS WITHIN THE PAD SHALL BE DETERMINED BY THE ENGINEER IN THE FIELD.
8. CORRECT PLACEMENT OF CONDUIT TO THE LEFT OF THE CABINET DIVIDER IS CRITICAL.
9. ANCHOR RODS SHALL PROJECT A MINIMUM OF 3" ABOVE THE CONCRETE BUT SHALL NOT INTERFERE WITH THE CABINET FUNCTIONS (SUPPORTING MEMBERS, ETC.).
10. CABINETS TO BE CENTERED (LEFT & RIGHT) ON THE PAD.
11. BRUSH ON ANTI-SEIZE LUBRICANT MUST BE APPLIED TO ALL ANCHOR ROD THREADS PROTRUDING ABOVE THE CONCRETE PAD BEFORE THE CABINET IS SET.

BY	DATE	REVISIONS

SYSTEM ID: 39428 T.E. 5608
METER ADDRESS: 12659 COUNTY ROAD 5
MASTER ID: T.E.

EQUIPMENT PAD LAYOUT SYSTEM B
(TYPE SSB SERVICE CABINET)
T.H. 13 AT C.S.A.H. 5 (KENWOOD TRAIL) S. RAMP
IN BURNSVILLE, DAKOTA COUNTY

S.P. 179-020-031, S.P. 019-605-028 | DRAWN BY: GDS | CKD BY: EJA | DATE: 05-09-12

CERTIFIED BY Michael P. Gulbransby LICENSED PROFESSIONAL ENGINEER LIC. NO. 19863 DATE: 06-12-12

STATE PROJ.NO. 1901-148 (T.H.13) SHEET NO. SS6 OF SS31 SHEETS

PLOTTED/REVISED: 6/12/2012
DISTRICT *: METRO
IPLOT NAME: equip pad B
PATH & FILENAME: IP_PWP:d1338009\T39428_sgl.dgn

TYPICAL PAD WITH CONTROLLER CABINET AND SERVICE CABINET

SEE INTERSECTION LAYOUT FOR CABLE INFORMATION (NOT TO SCALE)

PLAN VIEW

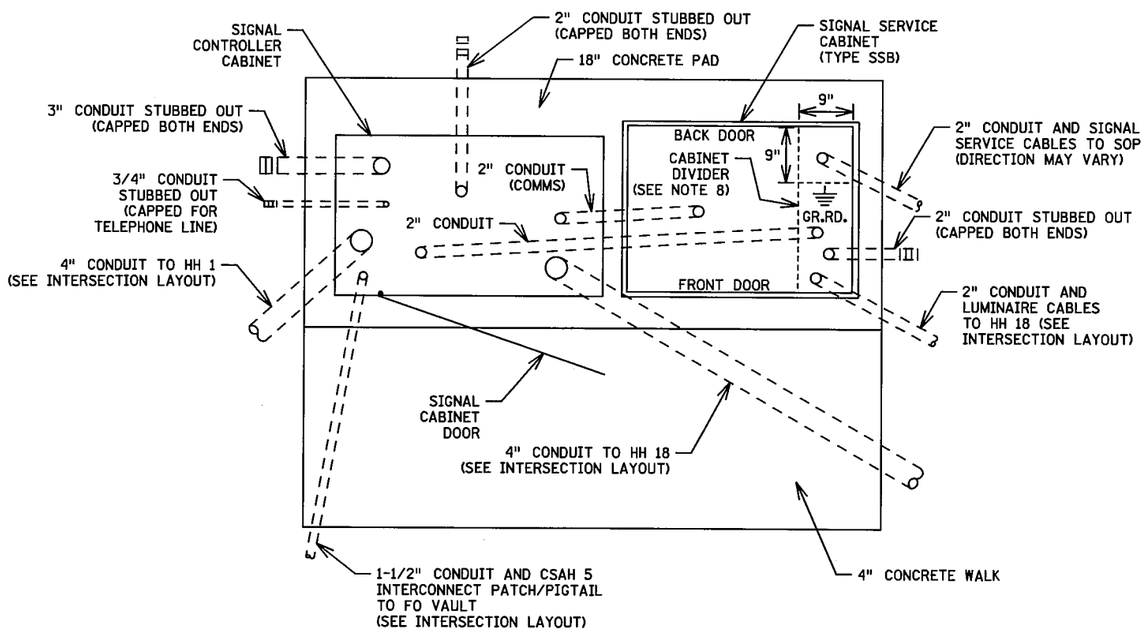

SIDE VIEW

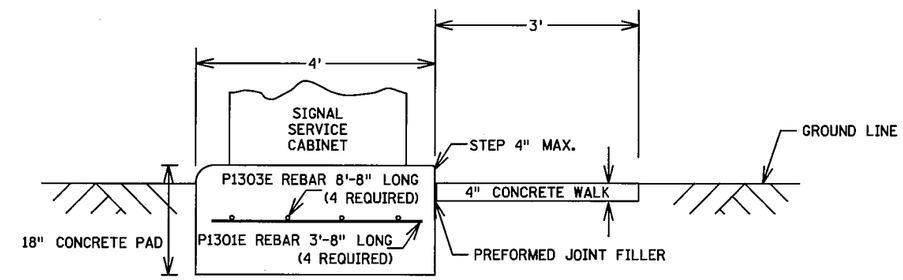

FRONT VIEW

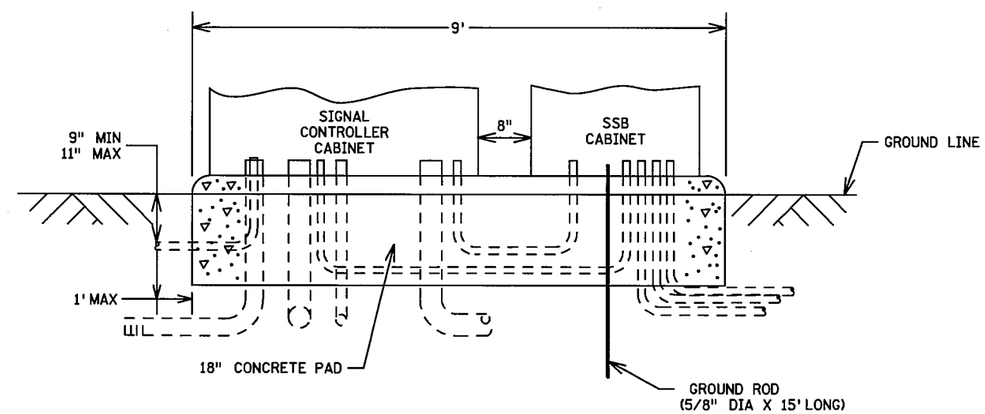

CONTROLLER CABINET TYPE "P" & "R" BOLT PATTERN

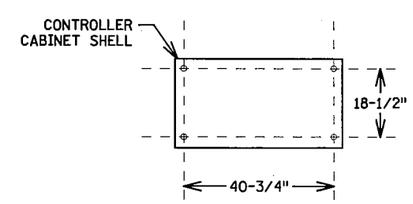

DIMENSION SHOWN ARE CENTER ROD TO CENTER ROD

S.S.B. SERVICE CABINET BOLT PATTERN

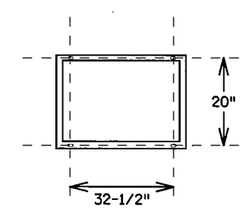

DIMENSION SHOWN ARE CENTER ROD TO CENTER ROD

NOTES:

1. THE ANCHOR RODS, NUTS, WASHERS AND RUBBER GASKET FOR THE CONTROLLER CABINET SHALL BE FURNISHED BY MNDOT.
2. THE OUTER EDGE OF THE ENTIRE EQUIPMENT PAD AND CONCRETE WALK SHALL BE BEVELED OR CHAMFERED IN A NEAT MANNER AS DIRECTED BY THE ENGINEER.
3. THE TOP OF THE CONDUITS SHALL BE CAPPED AFTER INSTALLATION (UNTIL CABLES ARE PULLED IN).
4. CONDUIT SHALL PROJECT A MINIMUM OF 2" ABOVE THE CONCRETE AND SHALL BE LOCATED INSIDE THE CABINET WHERE DIRECTED BY THE ENGINEER, BUT SHALL NOT INTERFERE WITH THE CABINET FUNCTIONS (SUPPORTING MEMBERS, ETC.).
5. CONCRETE MIX 3A32 OR EQUAL SHALL BE USED FOR THE EQUIPMENT PAD AND SIDEWALK.
6. CONDUITS WITH BOTH ENDS TERMINATING WITHIN THE PAD SHALL NOT BE PLACED BELOW THE CONCRETE.
7. THE EXACT LOCATION OF CONDUITS WITHIN THE PAD SHALL BE DETERMINED BY THE ENGINEER IN THE FIELD.
8. CORRECT PLACEMENT OF CONDUIT TO THE LEFT OF THE CABINET DIVIDER IS CRITICAL.
9. ANCHOR RODS SHALL PROJECT A MINIMUM OF 3" ABOVE THE CONCRETE BUT SHALL NOT INTERFERE WITH THE CABINET FUNCTIONS (SUPPORTING MEMBERS, ETC.).
10. CABINETS TO BE CENTERED (LEFT & RIGHT) ON THE PAD.
11. BRUSH ON ANTI-SEIZE LUBRICANT MUST BE APPLIED TO ALL ANCHOR ROD THREADS PROTRUDING ABOVE THE CONCRETE PAD BEFORE THE CABINET IS SET.

BY	DATE	REVISIONS

SYSTEM ID: 39427 T.E. 5607
METER ADDRESS: 12707 COUNTY ROAD 5
MASTER ID: T.E.

EQUIPMENT PAD LAYOUT SYSTEM C
(TYPE SSB SERVICE CABINET)
T.H. 13 AT C.S.A.H. 5 (KENWOOD TRAIL) N. RAMP
IN BURNSVILLE, DAKOTA COUNTY

S.P. 179-020-031, S.P. 019-605-028 | DRAWN BY: GDS | CKD BY: EJA | DATE: 05-09-12

CERTIFIED BY Michael P. Gibinsky LICENSED PROFESSIONAL ENGINEER LIC. NO. 19863 DATE: 06-12-12

STATE PROJ.NO. 1901-148 (T.H.13) SHEET NO. SS7 OF SS31 SHEETS

PLOTTED/REVISED: 6/12/2012
DISTRICT #: METRO
IPLOT NAME: equip pad C
PATH & FILENAME: IP_PWP-dl336560\T39427_sgl.dgn

PLOTTED/REVISED: 6/12/2012
DISTRICT #: METRO
IPLOT NAME: CAMERA EXENSION
PATH & FILENAME: IP_PWP:d1449724VT39429_sgl.dgn

S&I: X6-350/CAM 400 EXTENSION

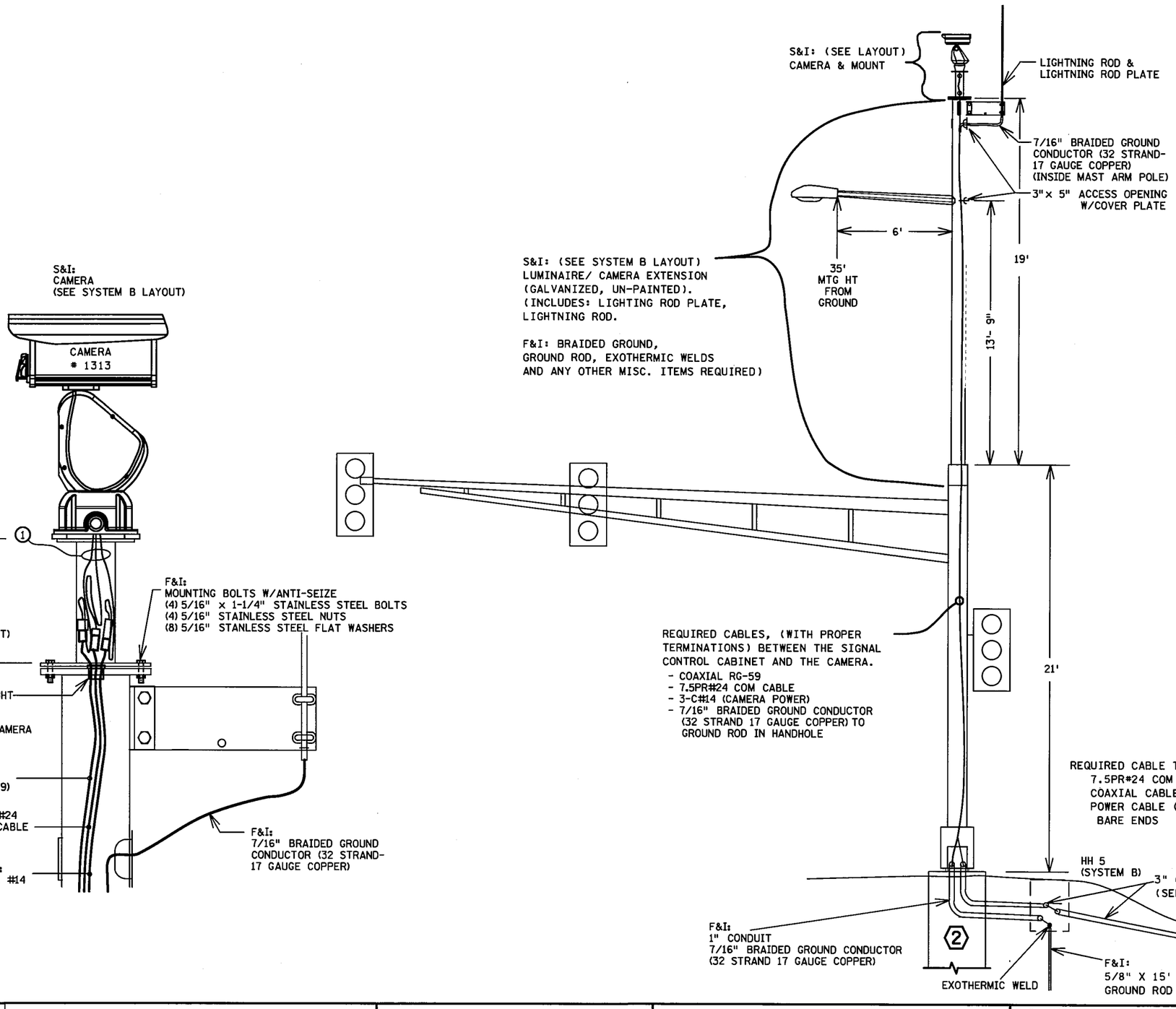

EXTENSION TOP & LIGHTNING PROTECTION DETAIL

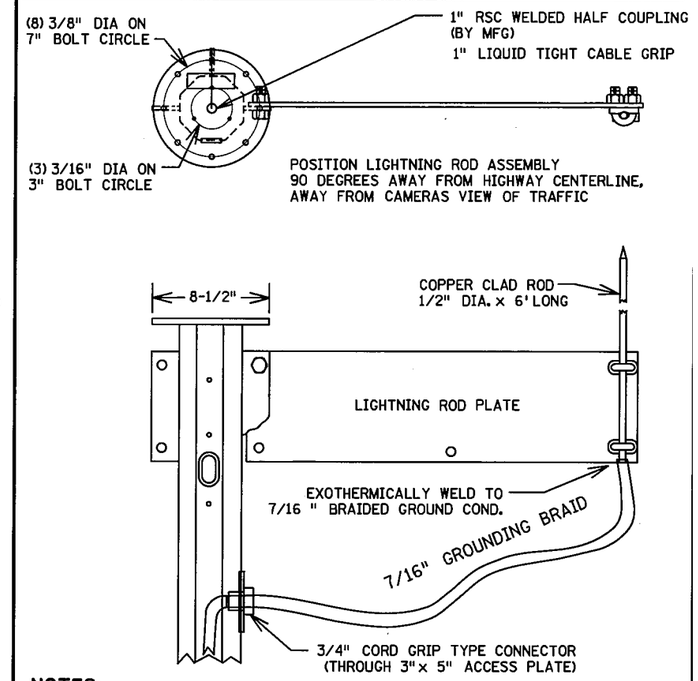

NOTES:

1) FURNISH & INSTALL 7/16" BRAIDED GROUND CONDUCTOR INSIDE MAST ARM POLE AND THROUGH INPLACE CONDUIT TO CLOSEST HANDHOLE (SEE LAYOUT).
2) CONTRACTOR SHALL EXOTHERMICALLY WELD 7/16" BRAIDED GROUND WIRE TO GROUND ROD IN HANDHOLE.
3) NO SPLICES ALLOWED IN 7/16" BRAIDED GROUND WIRE.
4) CONTRACTOR SHALL CUT A 3/4 INCH KNOCK OUT HOLE IN THE INSPECTION PLATE NEAR THE CAMERA AND PLACE A 3/4 INCH CORD GRIP TYPE FITTING TO RUN THE 7/16 INCH BRAIDED GROUND CONDUCTOR INTO THE POLE.

BY	DATE	REVISIONS

SYSTEM ID:39428, T.E. 5608
METER ADDRESS: 12659 COUNTY ROAD 5

LUMINAIRE/CAMERA EXTENSION DETAIL
TYPE X6-350 CAM 400 AT SYSTEM B
T.H. 13 AT C.S.A.H. 5 (KENWOOD TRAIL) S. RAMP
IN BURNSVILLE, DAKOTA COUNTY

S.P. NO. 179-020-031, SP 019-605-028 | DRAWN BY: SJK | CKD BY: EJA | DATE: 05-10-12

CERTIFIED BY Michael P. Gibrowsky (LICENSED PROFESSIONAL ENGINEER) LIC. NO. 19863 DATE: 06-12-12

STATE PROJ.NO. 1901-148 (T.H.13) SHEET NO. SS8 OF SS31 SHEETS

SIGN DETAILS

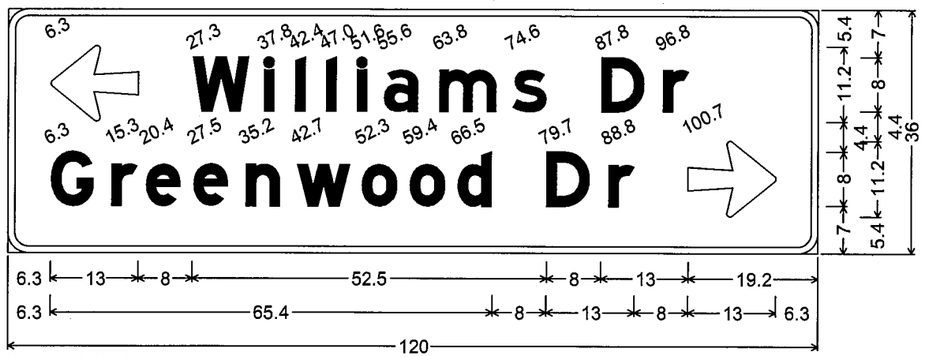

D-1; 3.0" Radius, 1.0" Border, White on Green;
Arrow 5 - 13.0" 180°; [Williams Dr] E Mod; [Greenwood Dr] E Mod;
Arrow 5 - 13.0" 0°;

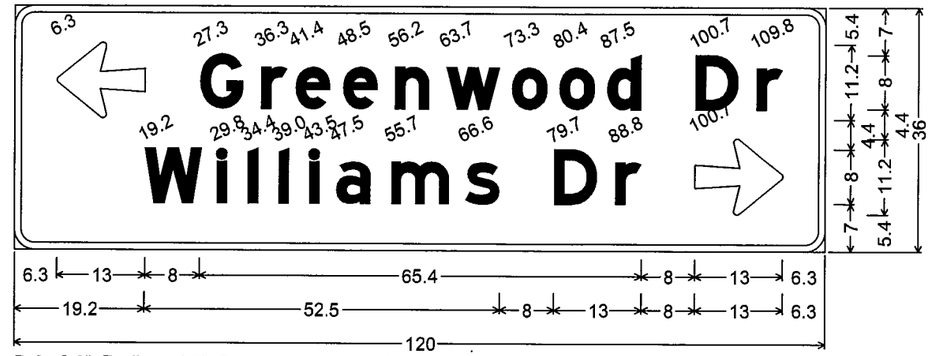

D-2; 3.0" Radius, 1.0" Border, White on Green;
Arrow 5 - 13.0" 180°; [Greenwood Dr] E Mod; [Williams Dr] E Mod;
Arrow 5 - 13.0" 0°;

MAST ARM SIGN LOCATION

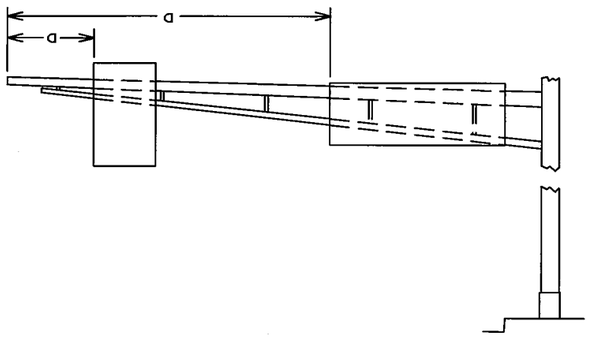

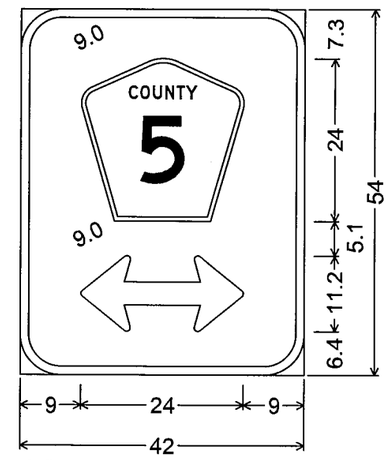

D-3;
6.0" Radius, 1.3" Border, White on Green;
Double Headed Arrow 5 - 24.0" 0°;

MAST ARM MOUNTED SIGNS

SIGN NO	SIGNAL SYSTEM	POLE NO	QTY	a	PANEL SIZE			PANEL AREA	PANEL TOTAL AREA	MOUNTING BRACKET NUMBER	MOUNTING BRACKET SPACING (1)	PANEL LEGEND
				FEET	INCH			SQ FT	SQ FT			
R10-X12	A	1	1	0	42	x	48	14.00	14.00	2	30	LEFT TURN YIELD FLASHING YELLOW ARROW
D-1	A	1	1	30	120	x	36	30.00	30.00	5	27	WILLIAMS DR - GREENWOOD DR
R10-X12	A	3	1	0	42	x	48	14.00	14.00	2	30	LEFT TURN YIELD FLASHING YELLOW ARROW
D-3	A	3	1	18	42	x	54	15.75	15.75	2	30	COUNTY 5
R10-X12	A	4	1	0	42	x	48	14.00	14.00	2	30	LEFT TURN YIELD FLASHING YELLOW ARROW
D-2	A	4	1	29	120	x	36	30.00	30.00	5	27	GREENWOOD DR - WILLIAMS DR
R10-X12	A	5	1	0	42	x	48	14.00	14.00	2	30	LEFT TURN YIELD FLASHING YELLOW ARROW
D-3	A	5	1	7	42	x	54	15.75	15.75	2	30	COUNTY 5

SPECIFIC NOTES:
(1) SPACING BETWEEN STIFFENERS SHALL NOT EXCEED 36 INCHES AND SHALL BE UNIFORMLY SPACED.
SEE STANDARD SIGNS MANUAL, PAGE 105A FOR BRACKET SPACING REQUIREMENTS.

GENERAL NOTES:
1. CORNERS OF STANDARD SIGN PANELS WITH MARGINS SHALL BE TRIMMED.
2. TYPE D SIGN PANELS EXTENDING BEYOND THE BORDER SHALL NOT BE TRIMMED.
3. FOR STRUCTURAL DETAILS OF MAST ARM MOUNTED SIGNS SEE STANDARD SIGNS MANUAL, PAGE 105A.
4. FOR TYPE D STRINGER AND PANEL JOINT DETAILS SEE STANDARD SIGNS MANUAL, PAGE 105.
5. THE MAST ARM MOUNTED SIGNS ARE INCLUDED IN THE TRAFFIC CONTROL SIGNAL SYSTEM PAY ITEM.

SIGN PANELS TYPE OVERLAY

CODE NO.	QTY	SIZE INCH	AREA SQ FT	TOTAL SQ FT	LEGEND
M1-6A	2	45 x 36	11.25	22.50	COUNTY 5
			TOTAL	22.50	

BY	DATE	REVISIONS

SYSTEM ID: 39429 T.E. 5609
METER ADDRESS: 12755 COUNTY RD 5
MASTER ID: T.E.

SIGNING DETAILS
TRAFFIC CONTROL SIGNAL SYSTEM A
TH 13 AT CSAH 5 (KENWOOD TRAIL) AT
WILLIAMS DRIVE/GREENWOOD DRIVE
IN BURNSVILLE, DAKOTA COUNTY

S.P. NO. 179-020-031, SP 019-605-028 | DRAWN BY: SJK | CKD BY: EJA | DATE: 05-09-12
CERTIFIED BY Michael P. Gabrosky LICENSED PROFESSIONAL ENGINEER LIC. NO. 19863 DATE: 06-12-12
STATE PROJ.NO. 1901-148 (T.H.13) SHEET NO. SS9 OF SS31 SHEETS

PLOTTED/REVISED: 6/12/2012
DISTRICT *: METRO
IPLOT NAME: type d signs
PATH & FILENAME: IP_PWP:dl449724VT39429_sgl.dgn

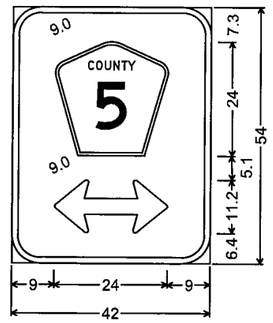

D-1;
6.0" Radius, 1.3" Border, White on Green;
Double Headed Arrow 5 - 24.0" 0°;

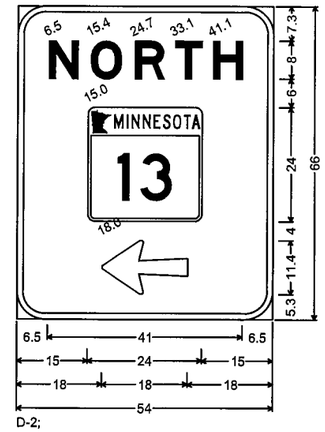

D-2;
6.0" Radius, 1.3" Border, White on Green;
[NORTH] E Mod;
Arrow 14 - 18.0" 180°;

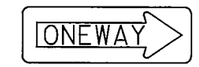

R6-1R

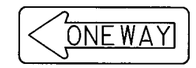

R6-1L

MAST ARM MOUNTED SIGNS

SIGN NO	SIGNAL SYSTEM	POLE NO	QTY	a	PANEL SIZE	PANEL AREA	PANEL TOTAL AREA	MOUNTING BRACKET NUMBER	MOUNTING BRACKET SPACING (1)	PANEL LEGEND
				FEET	INCH	SQ FT	SQ FT			
D-1	B	1	1	10	42 x 54	15.75	15.75	2	30	COUNTY 5 DOUBLE ARROW
R10-X12	B	2	1	0	42 x 48	14.00	14.00	2	30	LEFT TURN YIELD ON FLASHING ARROW
D-2	B	2	1	7	54 x 66	24.75	24.75	3	21	NORTH MINNESOTA 13 LEFT ARROW

SPECIFIC NOTES:
(1) SPACING BETWEEN STIFFENERS SHALL NOT EXCEED 36 INCHES AND SHALL BE UNIFORMLY SPACED. SEE STANDARD SIGNS MANUAL, PAGE 105A FOR BRACKET SPACING REQUIREMENTS.

GENERAL NOTES:
1. CORNERS OF STANDARD SIGN PANELS WITH MARGINS SHALL BE TRIMMED.
2. TYPE D SIGN PANELS EXTENDING BEYOND THE BORDER SHALL NOT BE TRIMMED.
3. FOR STRUCTURAL DETAILS OF MAST ARM MOUNTED SIGNS SEE STANDARD SIGNS MANUAL, PAGE 105A.
4. FOR TYPE D STRINGER AND PANEL JOINT DETAILS SEE STANDARD SIGNS MANUAL, PAGE 105.
5. THE MAST ARM MOUNTED SIGNS ARE INCLUDED IN PAYMENT FOR THE TRAFFIC CONTROL SIGNAL SYSTEM B PAY ITEM.

MAST ARM SIGN LOCATION

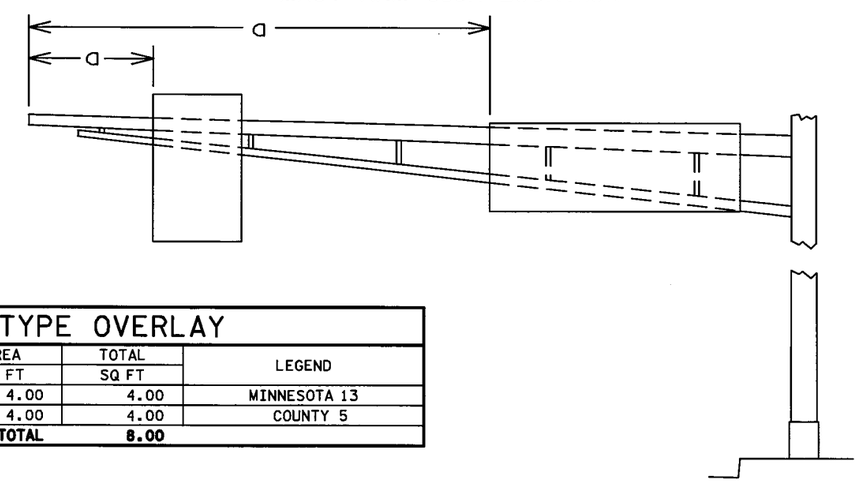

SIGN PANELS TYPE OVERLAY

CODE NO.	QTY	SIZE INCH	AREA SQ FT	TOTAL SQ FT	LEGEND
M1-5B	1	24 x 24	4.00	4.00	MINNESOTA 13
M1-6A	1	24 x 24	4.00	4.00	COUNTY 5
			TOTAL	8.00	

BY	DATE	REVISIONS

SYSTEM ID: 39428 T.E. 5608
METER ADDRESS: 12659 COUNTY ROAD 5
MASTER ID: T.E.

TYPE "D" SIGNS DETAILS
TRAFFIC CONTROL SIGNAL SYSTEM B
T.H. 13 AT C.S.A.H. 5 (KENWOOD TRAIL) S. RAMP
IN BURNSVILLE, DAKOTA COUNTY

S.P. 179-020-031, S.P. 019-605-028 | DRAWN BY: GDS | CKD BY: EJA | DATE: 05-09-12
CERTIFIED BY Michael P. Gibinsky LICENSED PROFESSIONAL ENGINEER LIC. NO. 19863 DATE: 06-12-12
STATE PROJ.NO. 1901-148 (T.H.13) SHEET NO. SS10 OF SS31 SHEETS

PLOTTED/REVISED: 6/12/2012
DISTRICT #: METRO
IPLOT NAME: signs B
PATH & FILENAME: IP_PWPxdl338009\739428_sgl.dgn

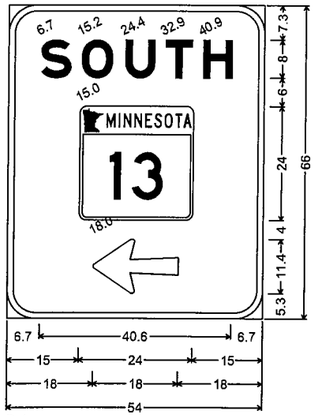

D-1;
6.0" Radius, 1.3" Border, White on Green;
[SOUTH] E Mod;
Arrow 14 - 18.0" 180°;

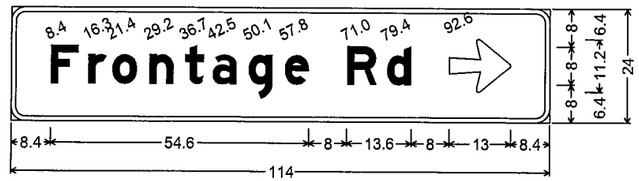

D-2; 3.0" Radius, 1.0" Border, White on Green;
[Frontage Rd] E Mod; Arrow 5 - 13.0" 0°;

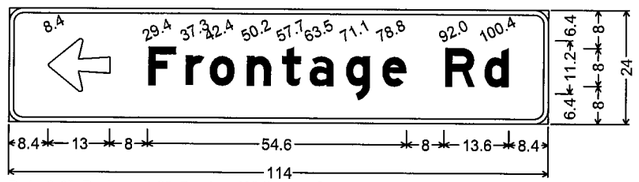

D-4; 3.0" Radius, 1.0" Border, White on Green;
Arrow 5 - 13.0" 180°; [Frontage Rd] E Mod;

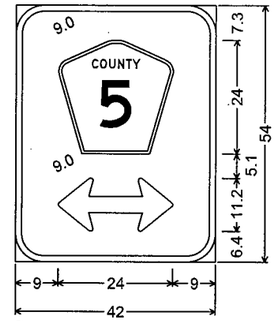

D-3;
6.0" Radius, 1.3" Border, White on Green;
Double Headed Arrow 5 - 24.0" 0°;

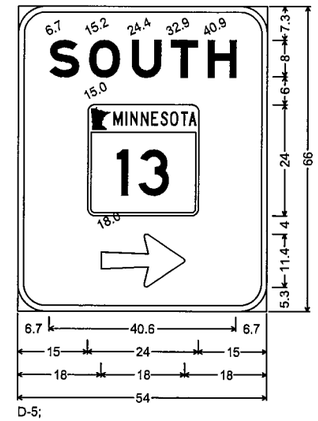

D-5;
6.0" Radius, 1.3" Border, White on Green;
[SOUTH] E Mod; Arrow 14 - 18.0" 0°;

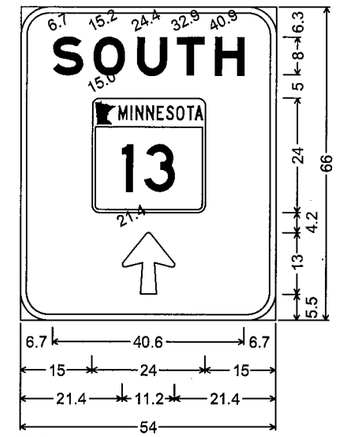

D-6;
6.0" Radius, 1.3" Border, White on Green;
[SOUTH] E Mod;
Arrow 5 - 13.0" 90°;

MAST ARM MOUNTED SIGNS

SIGN NO	SIGNAL SYSTEM	POLE NO	QTY	a	PANEL SIZE			PANEL AREA	PANEL TOTAL AREA	MOUNTING BRACKET NUMBER	MOUNTING BRACKET SPACING	PANEL LEGEND
				FEET	INCH			SQ FT	SQ FT		(1)	
R10-X12	C	1	1	0	42	x	48	14.00	14.00	2	30	LEFT TURN YIELD ON FLASHING YELLOW ARROW
D-1	C	1	1	6	54	x	66	24.75	24.75	3	21	SOUTH MINNESOTA 13 LEFT ARROW
D-2	C	1	1	26	114	x	24	19.00	19.00	4	33	FRONTAGE RD RIGHT ARROW
R10-X12	C	3	1	0	42	x	48	14.00	14.00	2	30	LEFT TURN YIELD ON FLASHING YELLOW ARROW
D-3	C	3	1	7	42	x	54	15.75	15.75	2	30	COUNTY 5 DOUBLE ARROW
R10-X12	C	4	1	0	42	x	48	14.00	14.00	2	30	LEFT TURN YIELD ON FLASHING YELLOW ARROW
D-4	C	4	1	14	114	x	24	19.00	19.00	4	33	LEFT ARROW FRONTAGE RD
D-5	C	4	1	34	54	x	66	24.75	24.75	3	21	SOUTH MINNESOTA 13 RIGHT ARROW
R10-X12	C	6	1	0	42	x	48	14.00	14.00	2	30	LEFT TURN YIELD ON FLASHING YELLOW ARROW
D-6	C	6	1	13	54	x	66	24.75	24.75	3	21	SOUTH 13 UP ARROW
D-3	C	6	1	18	42	x	54	15.75	15.75	2	30	COUNTY 5 DOUBLE ARROW

SPECIFIC NOTES:
(1) SPACING BETWEEN STIFFENERS SHALL NOT EXCEED 36 INCHES AND SHALL BE UNIFORMLY SPACED. SEE STANDARD SIGNS MANUAL, PAGE 105A FOR BRACKET SPACING REQUIREMENTS.

GENERAL NOTES:
1. CORNERS OF STANDARD SIGN PANELS WITH MARGINS SHALL BE TRIMMED.
2. TYPE D SIGN PANELS EXTENDING BEYOND THE BORDER SHALL NOT BE TRIMMED.
3. FOR STRUCTURAL DETAILS OF MAST ARM MOUNTED SIGNS SEE STANDARD SIGNS MANUAL, PAGE 105A.
4. FOR TYPE D STRINGER AND PANEL JOINT DETAILS SEE STANDARD SIGNS MANUAL, PAGE 105.
5. THE MAST ARM MOUNTED SIGNS ARE INCLUDED IN PAYMENT FOR THE TRAFFIC CONTROL SIGNAL SYSTEM C PAY ITEM.

MAST ARM SIGN LOCATION

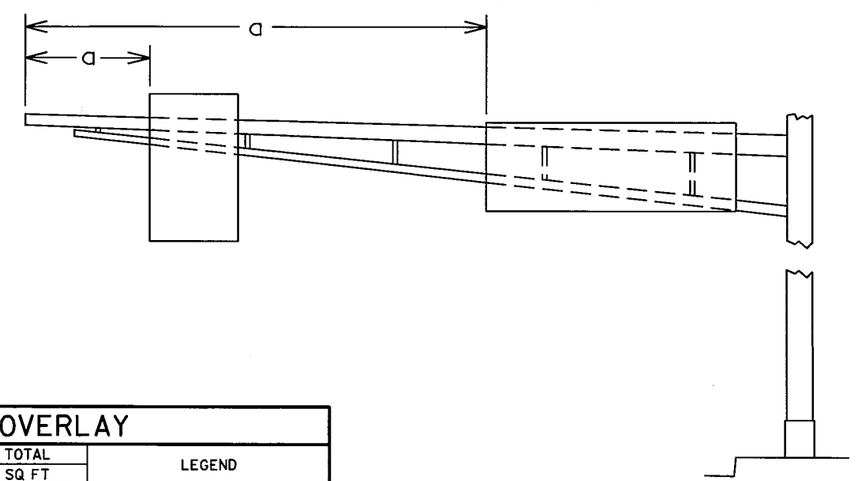

SIGN PANELS TYPE OVERLAY

CODE NO.	QTY	SIZE INCH	AREA SQ FT	TOTAL SQ FT	LEGEND
M1-5B	3	24 x 24	4.00	12.00	MINNESOTA 13
M1-6A	2	24 x 24	4.00	8.00	COUNTY 5
			TOTAL	20.00	

BY	DATE	REVISIONS

SYSTEM ID: 39427 T.E. 5607
METER ADDRESS: 12707 COUNTY ROAD 5
MASTER ID: T.E.

TYPE "D" SIGNS DETAILS
TRAFFIC CONTROL SIGNAL SYSTEM C
T.H. 13 AT C.S.A.H. 5 (KENWOOD TRAIL) N. RAMP
IN BURNSVILLE, DAKOTA COUNTY

S.P. 179-020-031, S.P. 019-605-028 | DRAWN BY:GDS | CKD BY:EJA | DATE:05-09-12
CERTIFIED BY Michael P. Gibinsky LICENSED PROFESSIONAL ENGINEER LIC. NO. 19863 DATE: 06-12-12
STATE PROJ.NO. 1901-148 (T.H.13) SHEET NO. SS11 OF SS31 SHEETS

PLOTTED/REVISED: 6/12/2012
DISTRICT #: METRO
IPLOT NAME: signs C
PATH & FILENAME: IP_PWP:dl336560\T39427_sgl.dgn

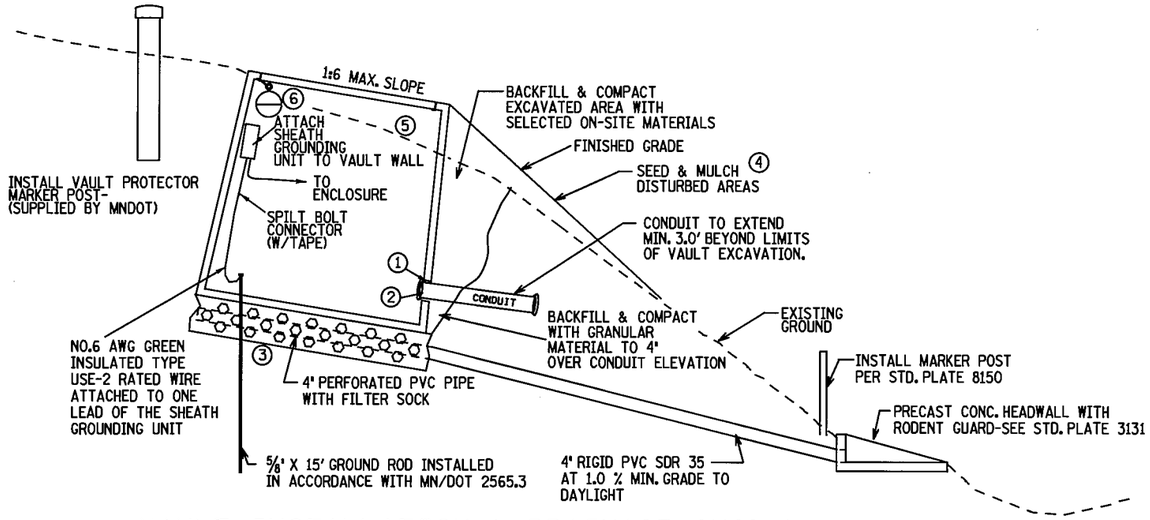

VAULT INSTALLATION & DRAINAGE SYSTEM (SLOPED AREAS)

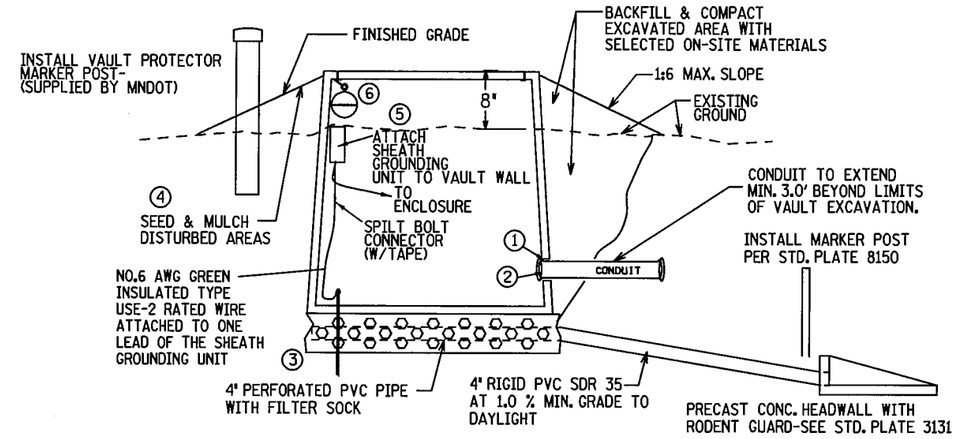

VAULT INSTALLATION & DRAINAGE SYSTEM
(LEVEL GROUND & ACHIEVABLE DRAINAGE AREAS)

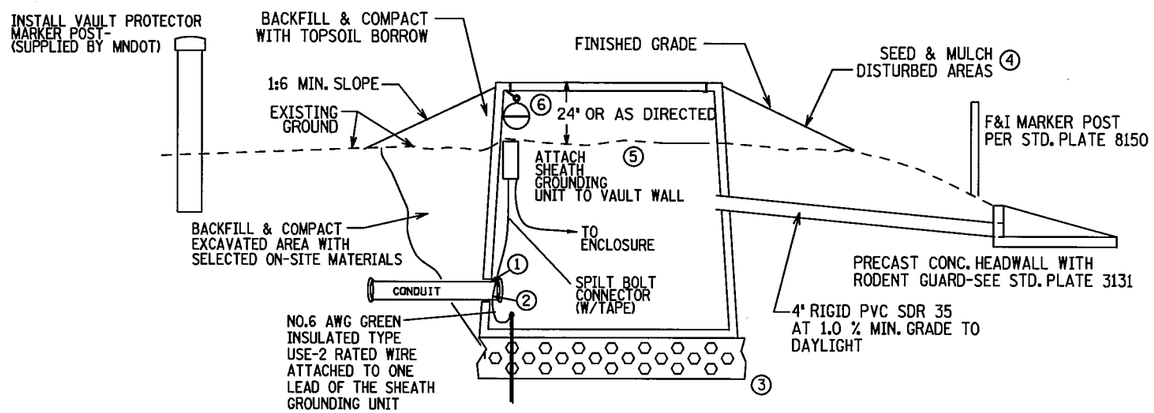

VAULT INSTALLATION & DRAINAGE SYSTEM
(LEVEL GROUND & MINIMUM ACHIEVABLE DRAINAGE AREAS)

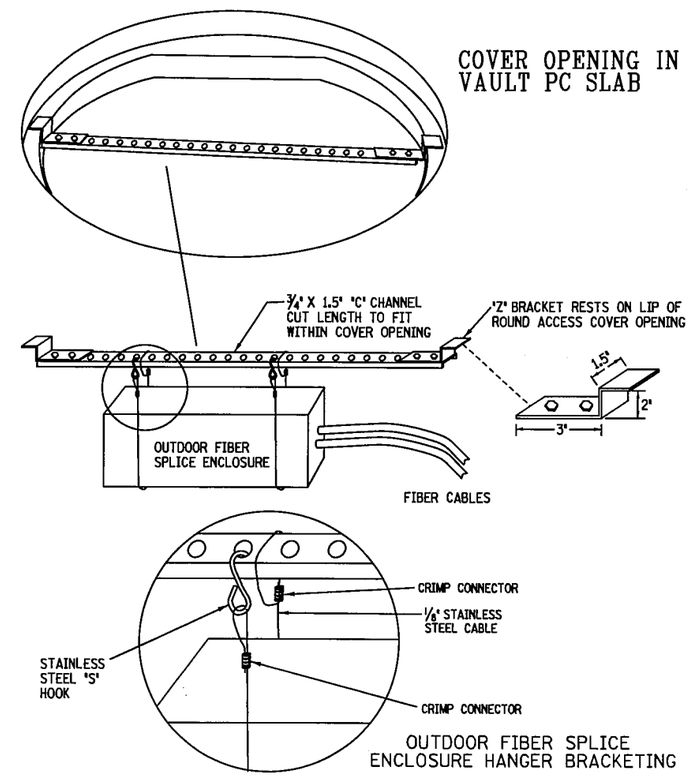

FIBER OPTIC SPLICE VAULT INSTALLATION

SPECIFIC NOTES

1. OPENINGS FOR CONDUIT SHALL BE SEALED WITH MATERIAL COMPATIBLE SEALANT. (INCIDENTAL)
2. PLUG CONDUIT OPENING WITH A DRAINABLE COMPOUND (INCIDENTAL)
3. F&I 1.0' COARSE FILTER AGGREGATE UNDER BASE COMPLYING WITH MN/DOT 3149.2H. F&I 4" PERFERATED PVC PIPE WITH FILTER SOCK TO PROVIDE DRAINAGE. (INCIDENTAL)
4. RESTORE DISTURBED AREAS WITH SEED MIXTURE 240 AND TYPE I MULCH PER MNDOT 2575.3
5. STRIP TOPSOIL FROM VAULT AND SLOPE AREAS PRIOR TO VAULT INSTALLATION (INCIDENTAL)
6. MOUNT LOCATOR BALL WITH TIE WRAP TO COVER LEDGE

GENERAL NOTES

1. GROUND CONNECTIONS SHALL BE COATED WITH OXIDATION PROHIBITING COMPOUND.
2. CABLE SHALL ENTER BELOW THE SUPPORT BRACKETS WITH 60' OF EXTRA CABLE FOR EACH CABLE COILED AROUND INSIDE OF SUPPORT BRACKETS. CABLES SHALL BE CUT TO THE SAME LENGTH
3. ALL HARDWARE SHALL BE STAINLESS STEEL WITH EXCEPTION OF THE 'C' CHANNEL MOUNTING BAR.
4. THE FRAME AND LID OF THE VAULT SHALL BE IN ACCORDANCE WITH AASHTO LOAD RATING H-10

BY	DATE	REVISIONS

SYSTEM ID:39427,39428,39429 T.E.
METER ADDRESS:
MASTER ID: T.E.

SPLICE VAULT INSTALLATION
TRAFFIC CONTROL SIGNAL SYSTEM
T.H. 13 AT C.S.A.H. 5 (KENWOOD TRAIL)
IN BURNSVILLE, DAKOTA COUNTY

S.P. NO. 179-020-031, SP 019-605-028 | DRAWN BY:SJK | CKD BY:EJA | DATE:05-09-12
CERTIFIED BY Michael P. Gibralty LICENSED PROFESSIONAL ENGINEER LIC. NO. 19863 DATE: 06-12-12
STATE PROJ.NO. 1901-148 (T.H.13) SHEET NO. SS12 OF SS31 SHEETS

PLOTTED/REVISED: 6/12/2012
DISTRICT #: METRO
IPLOT NAME: SPLICE VAULT INSTALLATIONS
PATH & FILENAME: IP_PWP:dl449724T39429_sgl.dgn

PLOTTED/REVISED: 6/12/2012
DISTRICT #: METRO
IPLOT NAME: SPLICE VAULT
PATH & FILENAME: IP_PWP:dl449724\T39429_sgl.dgn

STAINLESS STEEL COILING BRACKETS,
SIZED FOR 4" PIPE
& 8-3/8" IN HEIGHT (6 EACH).
PLACE 12" BELOW TOP OF PC RING.
FASTEN WITH SS HH BOLTS 5/8" X 4-1/2"
LONG AND SS "NYLOCK" STYLE LOCKNUT

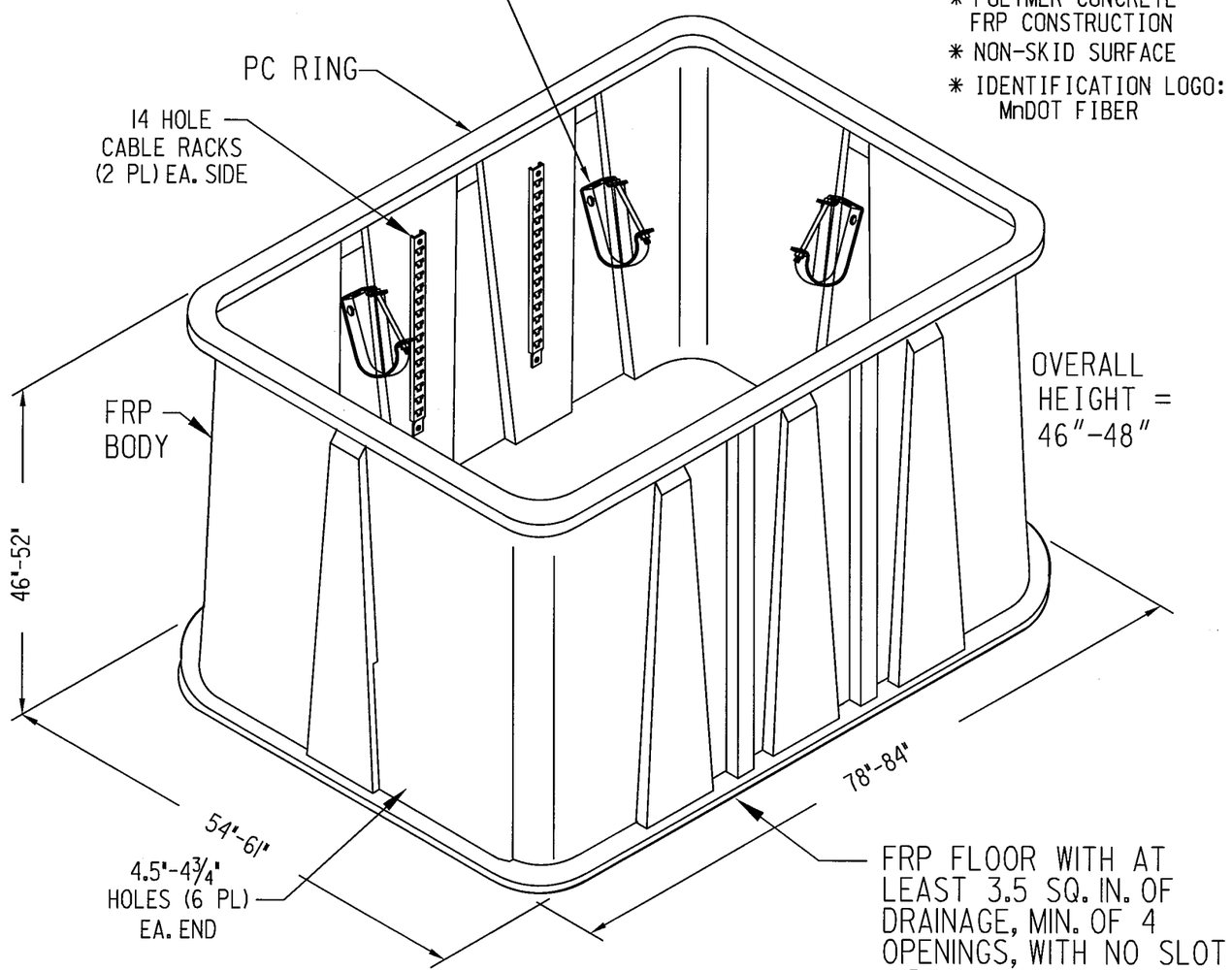

DRAWING NOT TO SCALE
* ALL BOLTS STAINLESS STEEL

COVER FEATURES

* (2) 3/8"-16 UNC X 3-1/2" LONG HEX HEAD STAINLESS STEEL BOLTS W/SELF ALIGNING REPLACEABLE STAINLESS STEEL NUTS POSITIONED IN HOLES TO ALLOW DRAINAGE OF SOIL & DEBRIS
* POLYMER CONCRETE FRP CONSTRUCTION
* NON-SKID SURFACE
* IDENTIFICATION LOGO: MnDOT FIBER

ENTIRE ASSEMBLY SHALL BE RATED
FORE MINIMUM DESIGN LOAD OF
15,000 LB. AND TEST LOAD OF 20,000 LB.

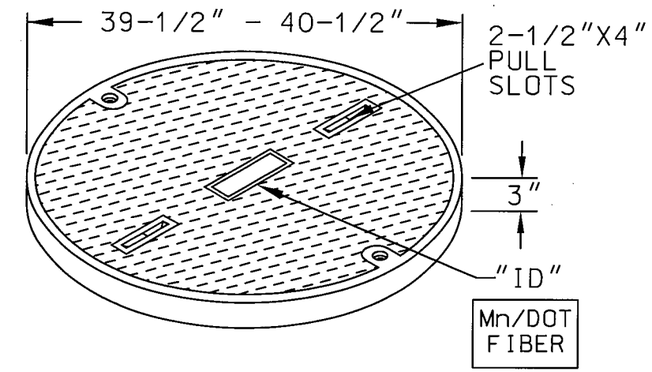

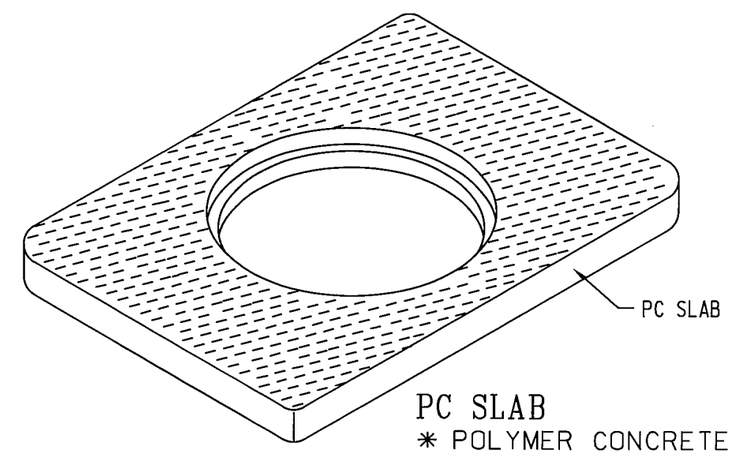

PC SLAB

* POLYMER CONCRETE
* NON-SKID SURFACE

FRP VAULT FEATURES

*FIBERGLASS REINFORCED POLYMER (FRP) CONSTRUCTION

FIBER OPTIC SPLICE VAULT

BY	DATE	REVISIONS

SYSTEM ID:39427,39428,39429 T.E.
METER ADDRESS:
MASTER ID: T.E.

SPLICE VAULT
TRAFFIC CONTROL SIGNAL SYSTEM
T.H. 13 AT C.S.A.H. 5 (KENWOOD TRAIL)
IN BURNSVILLE, DAKOTA COUNTY

S.P. NO. 179-020-031, SP 019-605-028 | DRAWN BY: SJK | CKD BY: EJA | DATE: 05-09-12
CERTIFIED BY Michael P. Gibrosky LICENSED PROFESSIONAL ENGINEER LIC. NO. 19863 DATE: 06-12-12
STATE PROJ.NO. 1901-148 (T.H.13) SHEET NO. SS13 OF SS31 SHEETS

FIBER OPTIC SCHEMATIC

(FOR SIGNAL COMMUNICATIONS)

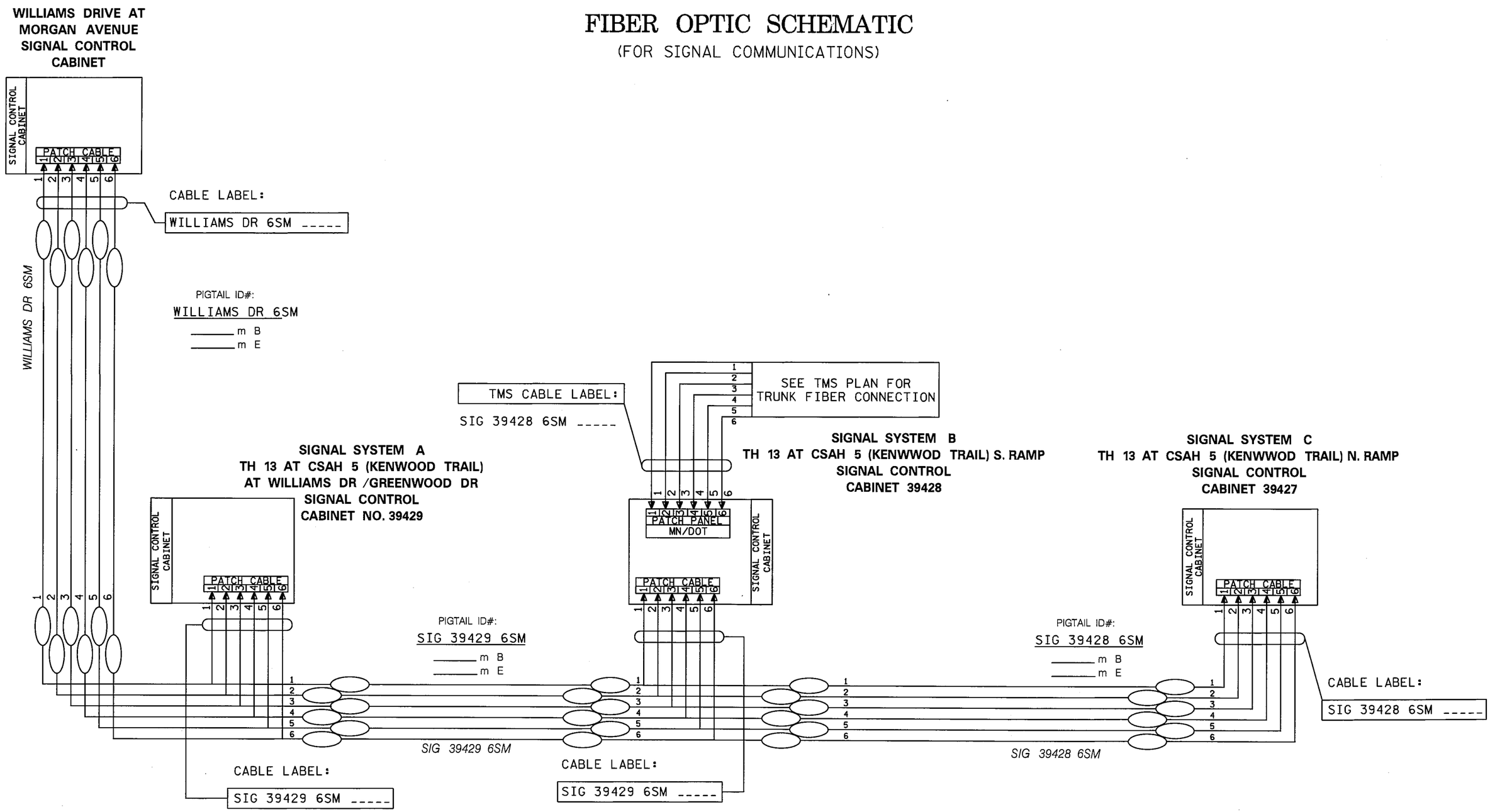

PLOTTED/REVISED: 6/12/2012

DISTRICT #: METRO
IPLOT NAME: fiber optic schematic
PATH & FILENAME: IP_PWP-d1449724\T39429_sgl.dgn

BY	DATE	REVISIONS

SYSTEM ID:39427,39428,39429 T.E.
METER ADDRESS:
MASTER ID: T.E.

FIBER OPTIC SCHEMATIC
TRAFFIC CONTROL SIGNAL SYSTEM
T.H. 13 AT C.S.A.H. 5 (KENWOOD TRAIL)
IN BURNSVILLE, DAKOTA COUNTY

S.P. NO. 179-020-031, SP 019-605-028 | DRAWN BY: SJK | CKD BY: EJA | DATE: 05-09-12

CERTIFIED BY Michael P. Gibensky LICENSED PROFESSIONAL ENGINEER LIC. NO. 19863 DATE: 06-12-12

STATE PROJ.NO. 1901-148 (T.H.13) SHEET NO. SS14 OF SS31 SHEETS

SIGNAL FACE CHART

FACE	R	Y	FYA	G
1-1, 1-2	←	←	←	←
2-1, 2-2, 2-3	●	●		●
3-1, 3-2	←	←	←	←
4-1, 4-2	●	●		●
5-1, 5-2	←	←	←	←
6-1, 6-2, 6-3	●	●		●
7-1, 7-2, 7-3	←	←	←	←
8-1, 8-2	●	●		●

-ALL SIGNAL INDICATIONS SHALL BE 12" LED
-ALL SIGNAL HEADS SHALL BE BLACK POLYCARBONITE WITH BACKGROUND SHIELDS
-FYA DENOTES FLASHING YELLOW ARROW

LOOP DETECTOR CHART

NUMBER	SIZE (FT)	LOCATION
D1-1, D5-1	2-6x6	20 & 50
D1-2, D5-2	2-6x6	5 & 35
D2-1, D2-2	6x6	300
D3-1, D7-1, D7-3	2-6x6	20 & 50
D3-2, D7-2, D7-4	2-6x6	5 & 35
D4-1	6x6	120
D4-2	6x6	5
D4-3	2-6x6	5 & 20
D6-1, D6-2	6x6	300
D8-1	6x6	120
D8-2	2-6x6	5 & 20

-ALL LOOP DETECTORS SHALL BE PVC UNLESS NOTED OTHERWISE
-LOCATION: DISTANCE FROM CROSSWALK/STOP BAR IN FEET

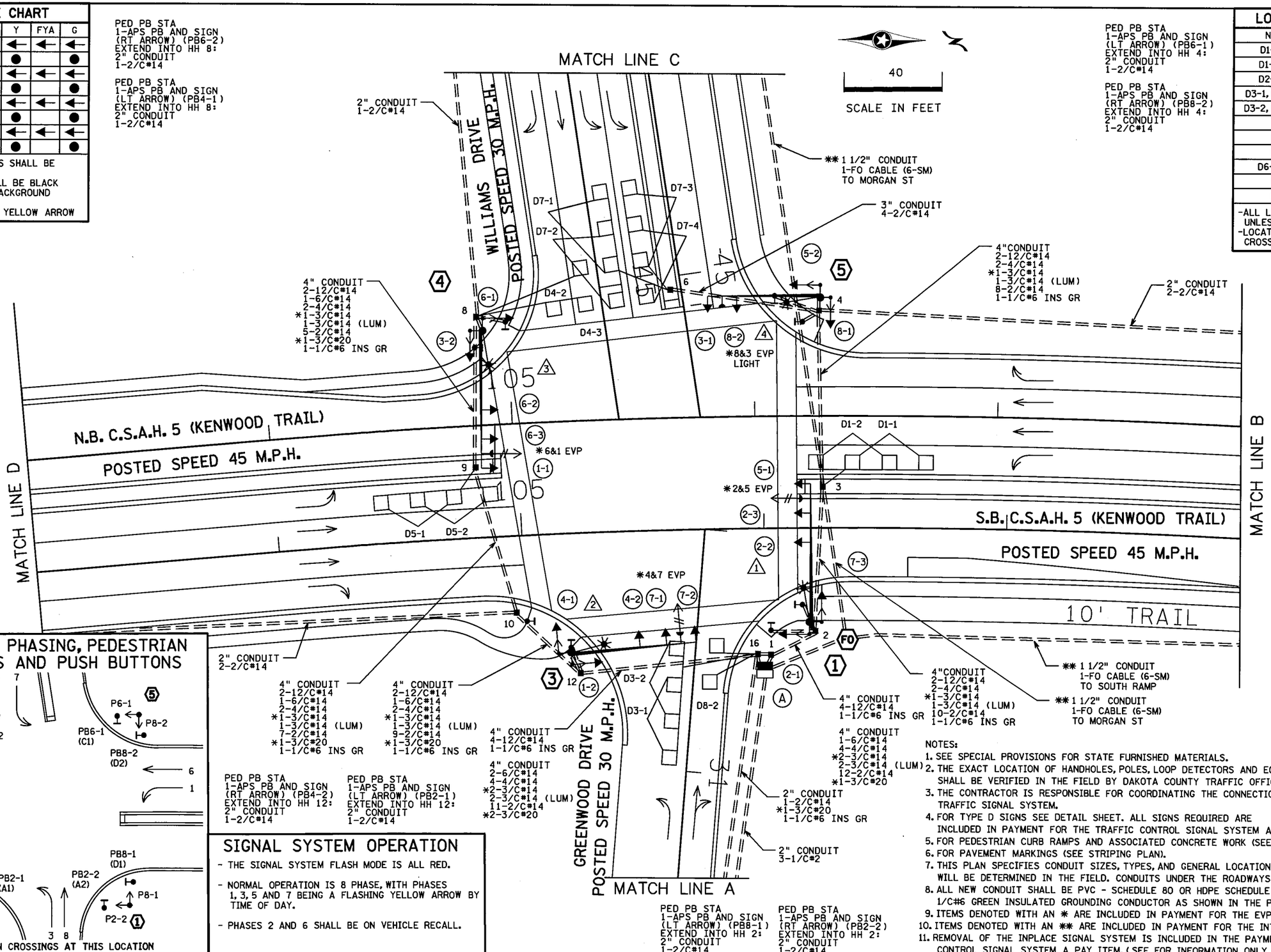

CONTROLLER PHASING, PEDESTRIAN INDICATIONS AND PUSH BUTTONS

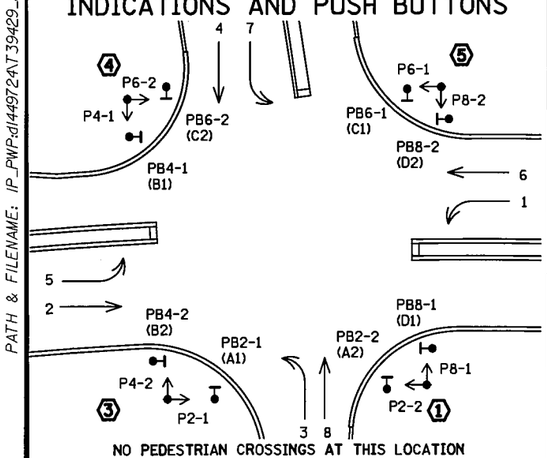

SIGNAL SYSTEM OPERATION

- THE SIGNAL SYSTEM FLASH MODE IS ALL RED.
- NORMAL OPERATION IS 8 PHASE, WITH PHASES 1, 3, 5 AND 7 BEING A FLASHING YELLOW ARROW BY TIME OF DAY.
- PHASES 2 AND 6 SHALL BE ON VEHICLE RECALL.

NOTES:

1. SEE SPECIAL PROVISIONS FOR STATE FURNISHED MATERIALS.
2. THE EXACT LOCATION OF HANDHOLES, POLES, LOOP DETECTORS AND EQUIPMENT PAD SHALL BE VERIFIED IN THE FIELD BY DAKOTA COUNTY TRAFFIC OFFICE PERSONNEL.
3. THE CONTRACTOR IS RESPONSIBLE FOR COORDINATING THE CONNECTION OF THE POWER FOR THE TRAFFIC SIGNAL SYSTEM.
4. FOR TYPE D SIGNS SEE DETAIL SHEET. ALL SIGNS REQUIRED ARE INCLUDED IN PAYMENT FOR THE TRAFFIC CONTROL SIGNAL SYSTEM A PAY ITEM.
5. FOR PEDESTRIAN CURB RAMPS AND ASSOCIATED CONCRETE WORK (SEE CONSTRUCTION PLAN).
6. FOR PAVEMENT MARKINGS (SEE STRIPING PLAN).
7. THIS PLAN SPECIFIES CONDUIT SIZES, TYPES, AND GENERAL LOCATIONS. THE EXACT LOCATIONS WILL BE DETERMINED IN THE FIELD. CONDUITS UNDER THE ROADWAYS REQUIRE BORING.
8. ALL NEW CONDUIT SHALL BE PVC - SCHEDULE 80 OR HDPE SCHEDULE 80 AND SHALL CARRY 1/C#6 GREEN INSULATED GROUNDING CONDUCTOR AS SHOWN IN THE PLAN.
9. ITEMS DENOTED WITH AN * ARE INCLUDED IN PAYMENT FOR THE EVP SYSTEM A PAY ITEM.
10. ITEMS DENOTED WITH AN ** ARE INCLUDED IN PAYMENT FOR THE INTERCONNECT SYSTEM PAY ITEM.
11. REMOVAL OF THE INPLACE SIGNAL SYSTEM IS INCLUDED IN THE PAYMENT FOR THE TRAFFIC CONTROL SIGNAL SYSTEM A PAY ITEM. (SEE FOR INFORMATION ONLY SHEETS)

BY	DATE	REVISIONS

SYSTEM ID: 39429 T.E. 5609
METER ADDRESS: 12755 COUNTY RD 5
MASTER ID: T.E.

INTERSECTION LAYOUT
TRAFFIC CONTROL SIGNAL SYSTEM A
TH 13 AT CSAH 5 (KENWOOD TRAIL) AT
WILLIAMS DRIVE/GREENWOOD DRIVE
IN BURNSVILLE, DAKOTA COUNTY

S.P. NO. 179-020-031, SP 019-605-028 | DRAWN BY: SJK | CKD BY: EJA | DATE: 05-10-12
CERTIFIED BY Michael P. Gabinsky LICENSED PROFESSIONAL ENGINEER LIC. NO. 19863 DATE: 06-12-12
STATE PROJ.NO. 1901-148 (T.H.13) SHEET NO. SS15 OF SS31 SHEETS

PLOTTED/REVISED: 6/12/2012
DISTRICT *: METRO
IPLOT NAME: SYSTEM A LAYOUT
PATH & FILENAME: IP_PWP:d1449724\T39429_sgl.dgn

PLOTTED/REVISED: 6/12/2012

DISTRICT #: METRO
IPLOT NAME: SYSTEM A MATCH LINES
PATH & FILENAME: IP_PWP-d1449724\T39429_sgl.dgn

4 PA100 POLE FOUNDATION
TYPE PA100-A-55-D40-9 (DAVIT AT 350 DEG)
1-ANGLE MOUNT SIGNAL OVERHEAD AT 0'
2-STRAIGHT MOUNT SIGNALS OVERHEAD AT 11' AND 23'
2-ANGLE MOUNT SIGNALS AT 90 AND 180 DEG
2-ANGLE MOUNT C.D.PED INDS AT 90 AND 180 DEG
* 1-ONE WAY EVP DETECTOR AND
CONFIRMATORY LIGHT (PHASES 6&1)
LUMINAIRE-250W HPS
1-R10-X12 SIGN ADJACENT TO HEAD (1-1)
1-TYPE D SIGN (D-2) (SEE SIGN DETAILS)
3" CONDUIT TO HH 8:
2-12/C #14
1-6/C #14
2-4/C #14
* 1-3/C #14
1-3/C #14 (LUM)
* 1-3/C #20
1-1/C #6 INS. GR.

5 PA100 POLE FOUNDATION
TYPE PA100-A-45-D40-9 (DAVIT AT 350 DEG)
1-ANGLE MOUNT SIGNAL OVERHEAD AT 0'
1-STRAIGHT MOUNT SIGNALS OVERHEAD AT 11'
2-ANGLE MOUNT SIGNALS AT 90 AND 180 DEG
2-ANGLE MOUNT C.D.PED INDS AT 90 AND 180 DEG
* 1-ONE WAY EVP CONFIRMATORY LIGHT (PHASES 8&3)
LUMINAIRE-250W HPS
1-R10-X12 SIGN ADJACENT TO HEAD (3-1)
1-TYPE D SIGN (D-2) (SEE SIGN DETAILS)
3" CONDUIT TO HH 4:
2-12/C #14
2-4/C #14
* 1-3/C #14
1-3/C #14 (LUM)
1-1/C #6 INS. GR.

3 PA100 POLE FOUNDATION
TYPE PA100-A-50-D40-9 (DAVIT AT 350 DEG)
1-ANGLE MOUNT SIGNAL OVERHEAD AT 0'
2-STRAIGHT MOUNT SIGNALS OVERHEAD AT 11' AND 23'
2-ANGLE MOUNT SIGNALS AT 90 AND 180 DEG
2-ANGLE MOUNT C.D.PED INDS AT 90 AND 180 DEG
* 1-ONE WAY EVP DETECTOR AND
CONFIRMATORY LIGHT (PHASES 4&7)
LUMINAIRE-250W HPS
1-R10-X12 SIGN ADJACENT TO HEAD (7-2)
1-TYPE D SIGN (D-2) (SEE SIGN DETAILS)
3" CONDUIT TO HH 12:
2-12/C #14
1-6/C #14
2-4/C #14
* 1-3/C #14
1-3/C #14 (LUM)
* 1-3/C #20
1-1/C #6 INS. GR.

1 PA100 POLE FOUNDATION
TYPE PA100-A-55-D40-9 (DAVIT AT 350 DEG)
1-ANGLE MOUNT SIGNAL OVERHEAD AT 0'
2-STRAIGHT MOUNT SIGNALS OVERHEAD AT 11' AND 23'
2-ANGLE MOUNT SIGNALS AT 90 AND 180 DEG
2-ANGLE MOUNT C.D.PED INDS AT 90 AND 180 DEG
* 1-ONE WAY EVP DETECTOR AND
CONFIRMATORY LIGHT (PHASES 2&5)
LUMINAIRE-250W HPS
1-R10-X12 SIGN ADJACENT TO HEAD (5-1)
1-TYPE D SIGN (D-2) (SEE SIGN DETAILS)
3" CONDUIT TO HH 2:
2-12/C #14
1-6/C #14
2-4/C #14
* 1-3/C #14
1-3/C #14 (LUM)
* 1-3/C #20
1-1/C #6 INS. GR.

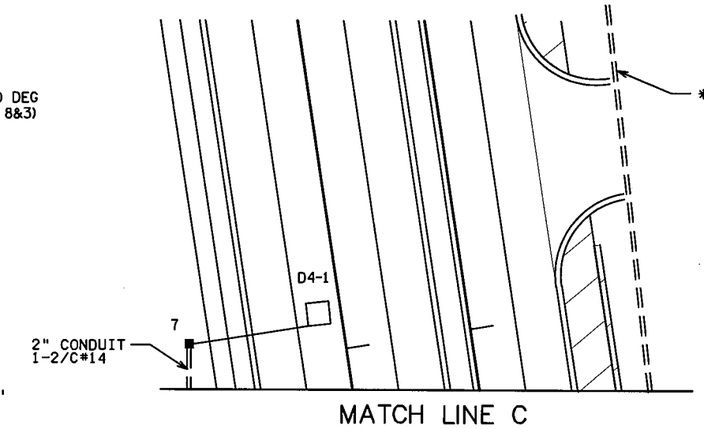

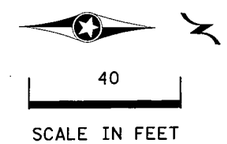

A EQUIPMENT PAD (SEE DETAIL SHEET)
SERVICE CABINET (SSB)
CONTROLLER AND CABINET (STATE FURNISHED)

4" CONDUIT TO HH 16:	4" CONDUIT TO HH 1:
4-12/C #14	4-12/C #14
1-1/C #6 INS. GR.	1-1/C #6 INS. GR.
4" CONDUIT TO HH 16:	4" CONDUIT TO HH 1:
2-6/C #14	1-6/C #14
4-4/C #14	4-4/C #14
* 2-3/C #14	* 2-3/C #14
15-2/C #14	12-2/C #14
* 3-3/C #20	* 1-3/C #20

2-2" AND 1-3" CONDUIT STUBBED OUT (CAPPED BOTH ENDS
3/4" CONDUIT STUBBED OUT (FOR TELEPHONE LINE)
** 1-1/2" CONDUIT TO VAULT:
** 1-FO PATCH PIGTAIL (6-SM)
CONTROLLER CABINET TO SERVICE CABINET:
2" CONDUIT
2-1/C #6
1-1/C #6 INS. GR.
CONTROLLER CABINET TO SERVICE CABINET (COMMS):
2" CONDUIT
1-6PR #19 (SPARE)
SERVICE CABINET TO SOP VIA HH17:
2" CONDUIT
3-1/C #2
SERVICE CABINET TO HH 1:
2" CONDUIT
4-3/C #14 (LUM)
HH 1 TO HH 16:
2" CONDUIT
2-3/C #14 (LUM)

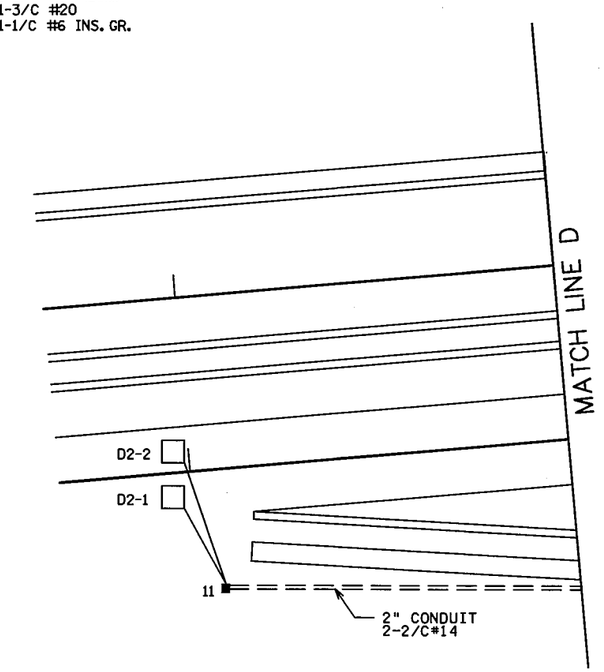

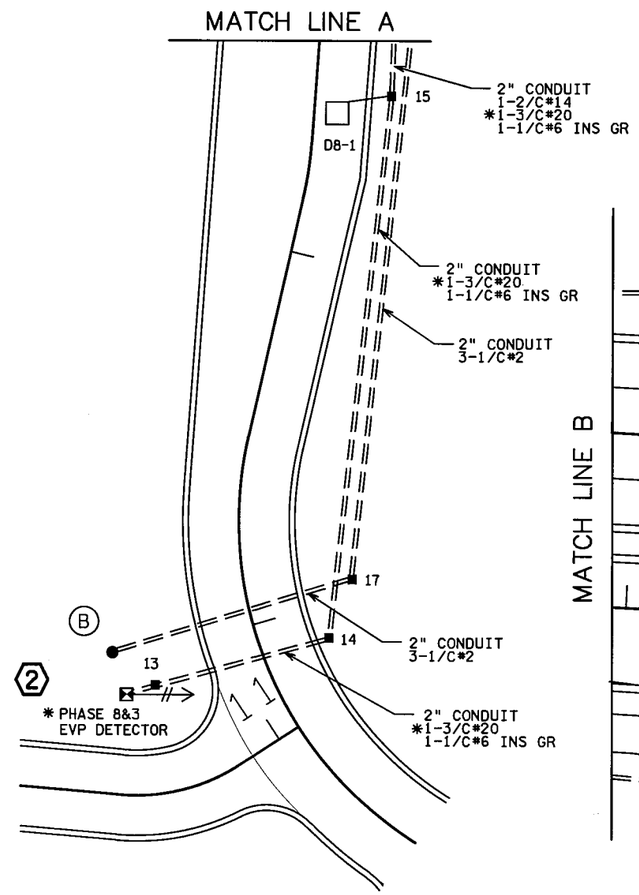

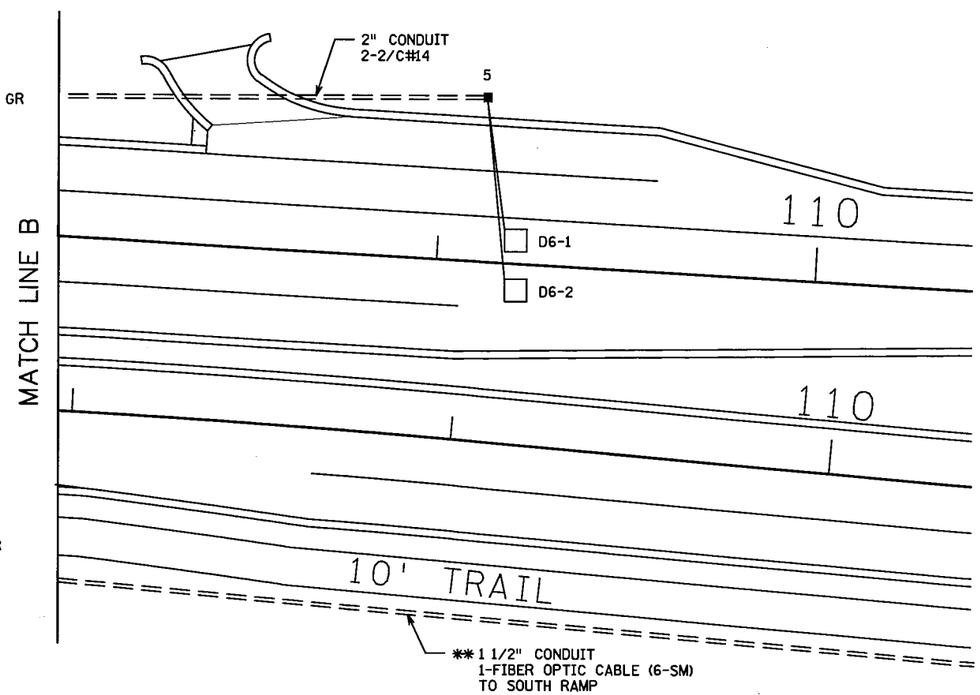

B SOP WOOD POLE (XCEL ENERGY)
2" CONDUIT RISER AND WEATHERHEAD
TO SERVICE CABINET VIA HH 17:
2" CONDUIT
3-1/C#2

2 PEDESTAL FOUNDATION
13' PEDESTAL POLE PLUS BASE
* PHASE 8 EVP DETECTOR
EXTEND INTO HH 14
2" CONDUIT
*1-3/C#20
1-1/C#6 INS GR

BY	DATE	REVISIONS

SYSTEM ID: 39429 T.E. 5609
METER ADDRESS: 12755 COUNTY RD 5
MASTER ID: T.E.

MATCH LINES AND POLE NOTES
TRAFFIC CONTROL SIGNAL SYSTEM A
TH 13 AT CSAH 5 (KENWOOD TRAIL) AT
WILLIAMS DRIVE/GREENWOOD DRIVE
IN BURNSVILLE, DAKOTA COUNTY

S.P. NO. 179-020-031, SP 019-605-028 | DRAWN BY: SJK | CKD BY: EJA | DATE: 05-09-12
CERTIFIED BY Michael P. Gabrosky LICENSED PROFESSIONAL ENGINEER LIC. NO. 19863 DATE: 06-12-12
STATE PROJ.NO. 1901-148 (T.H.13) SHEET NO. SS16 OF SS31 SHEETS

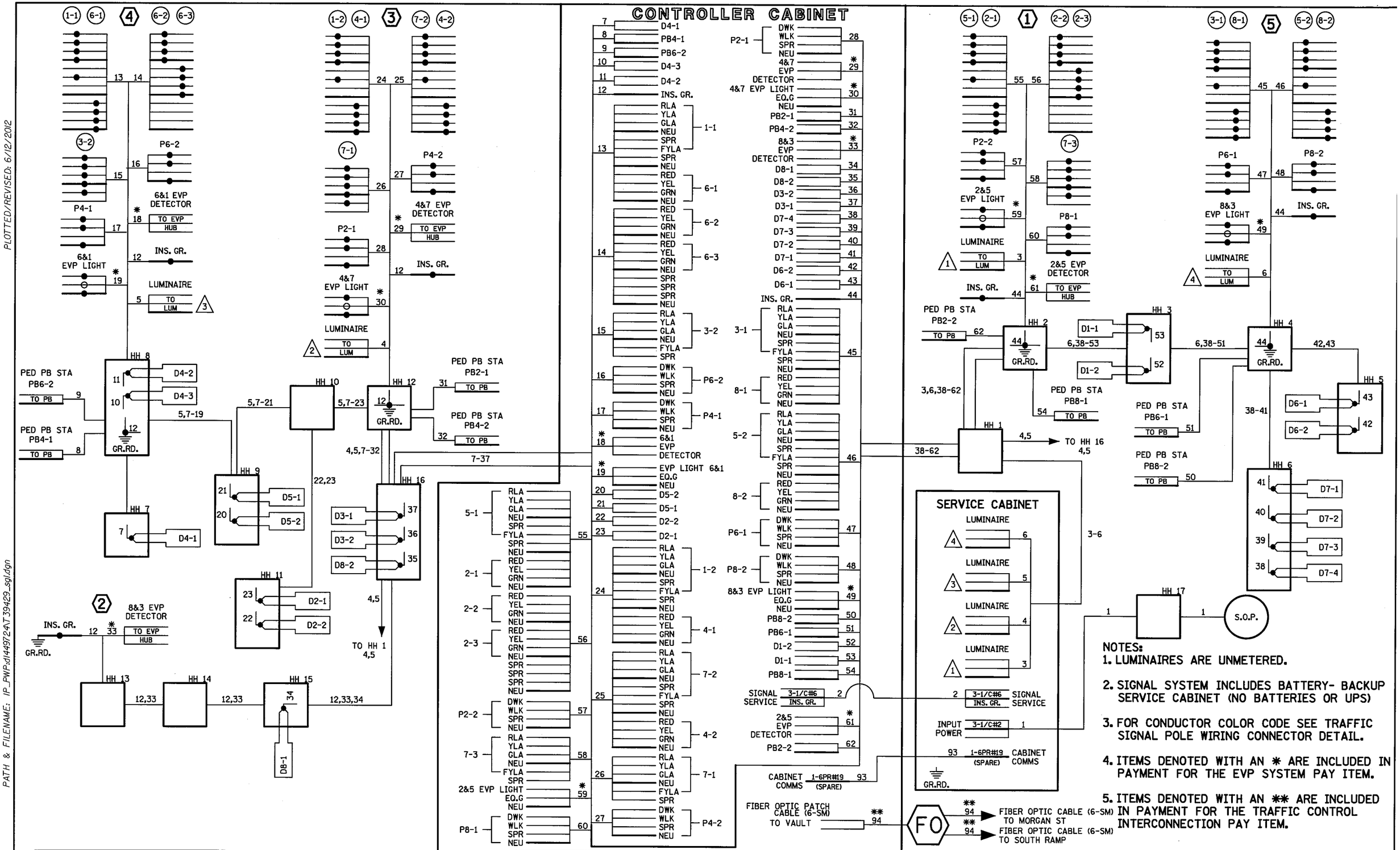

NOTES:

1. LUMINAIRES ARE UNMETERED.
2. SIGNAL SYSTEM INCLUDES BATTERY- BACKUP SERVICE CABINET (NO BATTERIES OR UPS)
3. FOR CONDUCTOR COLOR CODE SEE TRAFFIC SIGNAL POLE WIRING CONNECTOR DETAIL.
4. ITEMS DENOTED WITH AN * ARE INCLUDED IN PAYMENT FOR THE EVP SYSTEM PAY ITEM.
5. ITEMS DENOTED WITH AN ** ARE INCLUDED IN PAYMENT FOR THE TRAFFIC CONTROL INTERCONNECTION PAY ITEM.

PLOTTED/REVISED: 6/12/2012

DISTRICT #: METRO
IPLOT NAME: SYSTEM A WIRING DIAGRAM
PATH & FILENAME: IP_PWP:d1449724\T39429_sgl.dgn

BY	DATE	REVISIONS

SYSTEM ID: 39429 T.E. 5609
METER ADDRESS: 12755 COUNTY RD 5
MASTER ID: T.E.

FIELD WIRING DIAGRAM
TRAFFIC CONTROL SIGNAL SYSTEM A
TH 13 AT CSAH 5 (KENWOOD TRAIL) AT
WILLIAMS DRIVE/GREENWOOD DRIVE
IN BURNSVILLE, DAKOTA COUNTY

S.P. NO. 179-020-031, SP 019-605-028 | DRAWN BY: SJK | CKD BY: EJA | DATE: 05-09-12

CERTIFIED BY Michael P. Gubinsky LICENSED PROFESSIONAL ENGINEER LIC. NO. 19863 DATE: 06-12-12

STATE PROJ.NO. 1901-148 (T.H.13) SHEET NO. SS17 OF SS31 SHEETS

SIGNAL FACE CHART

FACE	R	Y	FYA	G
1-1, 1-2	←	←	←	←
2-1, 2-2, 2-3	●	●		●
4-1, 4-2, 4-3	●	●		●
6-1, 6-2, 6-3, 6-4	●	●		●

-ALL SIGNAL INDICATIONS SHALL BE 12" LED
-ALL SIGNAL HEADS SHALL BE BLACK POLYCARBONITE WITH BACKGROUND SHIELDS
-FYA DENOTES FLASHING YELLOW ARROW

LOOP DETECTOR CHART

NUMBER	SIZE (FT)	LOCATION
D1-1 (1)	2-6x6	20 & 50
D1-2 (1)	2-6x6	5 & 35
D2-1, D2-2	6x6	300
D4-1, D4-2	6x6	120
D4-3	2-6x6	0 & 15
D4-4	2-6x6	5 & 20
D6-1, D6-2	6x6	300

-ALL LOOP DETECTORS SHALL BE PVC UNLESS NOTED OTHERWISE
-LOCATION: DISTANCE FROM CROSSWALK/STOP BAR IN FEET

(1) CONDUITS SUPENDED UNDER BRIDGE, JUNCTION BOX NO. 1 AND (4) 6'x6' PVC LOOP DETECTORS ON BRIDGE 19036, SHALL BE FURNISHED, INSTALLED AND PAID FOR AS PART OF THE BRIDGE CONTRACT. (SEE BRIDGE PLAN)

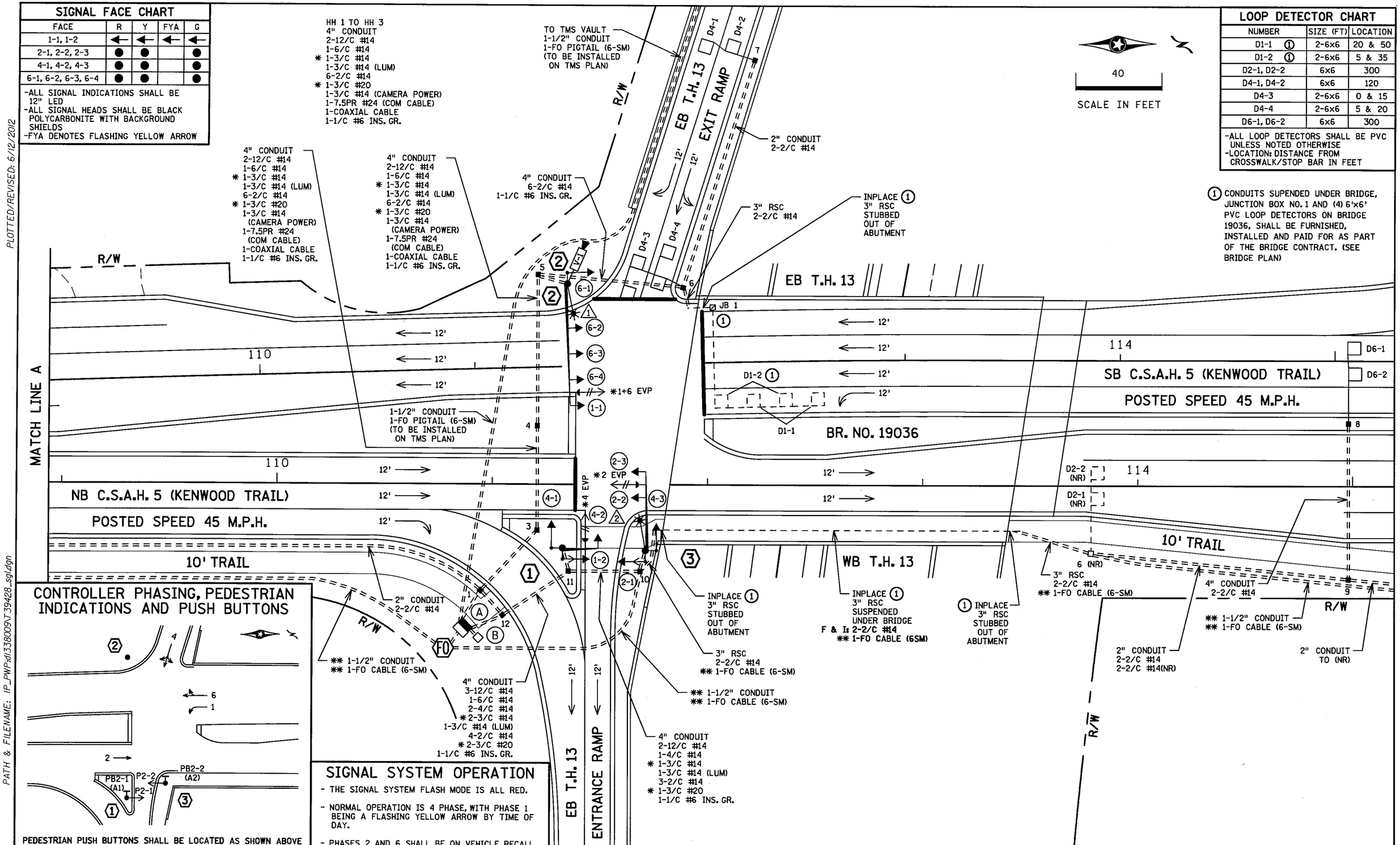

CONTROLLER PHASING, PEDESTRIAN INDICATIONS AND PUSH BUTTONS

PEDESTRIAN PUSH BUTTONS SHALL BE LOCATED AS SHOWN ABOVE

SIGNAL SYSTEM OPERATION

- THE SIGNAL SYSTEM FLASH MODE IS ALL RED.
- NORMAL OPERATION IS 4 PHASE, WITH PHASE 1 BEING A FLASHING YELLOW ARROW BY TIME OF DAY.
- PHASES 2 AND 6 SHALL BE ON VEHICLE RECALL.

BY	DATE	REVISIONS

SYSTEM ID: 39428 T.E. 5608
METER ADDRESS: 12659 COUNTY ROAD 5
MASTER ID: T.E.

INTERSECTION LAYOUT
TRAFFIC CONTROL SIGNAL SYSTEM B
T.H. 13 AT C.S.A.H. 5 (KENWOOD TRAIL) S. RAMP
IN BURNSVILLE, DAKOTA COUNTY

S.P. 179-020-031, S.P. 019-605-028 | DRAWN BY: GDS | CKD BY: EJA | DATE: 05-09-12
CERTIFIED BY Michael P. Gibrosky (LICENSED PROFESSIONAL ENGINEER) LIC. NO. 19863 DATE: 06-12-12
STATE PROJ.NO. 1901-148 (T.H.13) SHEET NO. SS18 OF SS31 SHEETS

PLOTTED/REVISED: 6/12/2012
DISTRICT *: METRO
IPLOT NAME: layout B
PATH & FILENAME: I:\P_PWP-d1338009\739428_sgl.dgn

INTERSECTION NOTES

(2) PA100 POLE FOUNDATION
TYPE PA100-A-55
S & I: X6-350/CAM 400 (MOUNTED AT 355 DEG)
FROM INPLACE POLE 2 (SEE NOTE 10)
1-ANGLE MOUNT SIGNAL OVERHEAD AT 0'
1-STRAIGHT MOUNT SIGNAL OVERHEAD
AT 11', 23' AND 35'
1-ANGLE MOUNT SIGNAL AT 180 DEG
S & I: 1-VIDEO CAMERA # 1313 (V1) MOUNTED ON
LUMINAIRE EXTENSION FROM INPLACE
POLE 2 (SEE NOTE 10)
* 1-ONE WAY EVP DETECTOR AND
CONFIRMATORY LIGHT (PHASES 1+6)
LUMINAIRE-250W HPS
2-R9-3a SIGN (NO PEDS) FACING POLE 1 AND NORTH
1-R10-X12 SIGN ADJACENT TO HEAD (1-1)
1-TYPE D SIGN (D-2) (SEE SIGN DETAILS)
3" CONDUIT TO HH 5:
2-12/C #14
1-6/C #14
* 1-3/C #14
1-3/C #14 (LUM)
* 1-3/C #20
1-3/C #14 (CAMERA POWER)
1-7.5PR #24 (COM CABLE)
1-COAXIAL CABLE
1-1/C #6 INS. GR.
1" CONDUIT TO HH 5:
1-7/16" BRAIDED GROUND ROD CONDUCTOR

(1) PA85 POLE FOUNDATION
TYPE PA85-A-15
1-ANGLE MOUNT SIGNAL OVERHEAD AT 0'
2-ANGLE MOUNT SIGNALS AT 90 AND 180 DEG
1-ANGLE MOUNT C.D. PED IND AT 90 DEG
1-APS PB AND SIGN (LT ARROW) (PB2-1)
* 1-ONE WAY EVP DETECTOR AND
CONFIRMATORY LIGHT (PHASE 4)
1-R9-3a SIGN (NO PEDS) FACING POLE 2
1-R6-1R SIGN (ONE WAY)
1-R6-1L SIGN (ONE WAY)
1-TYPE D SIGN (D-1) (SEE SIGN DETAILS)
3" CONDUIT TO HH 11:
1-12/C #14
1-6/C #14
1-4/C #14
* 1-3/C #14
1-2/C #14
* 1-3/C #20
1-1/C #6 INS. GR.

(3) PA90 POLE FOUNDATION
TYPE PA90-A-35-D40-9 (DAVIT AT 350 DEG)
1-ANGLE MOUNT SIGNAL OVERHEAD AT 0'
1-STRAIGHT MOUNT SIGNAL OVERHEAD AT 11'
2-ANGLE MOUNT SIGNALS AT 90 AND 180 DEG
1-ANGLE MOUNT C.D. PED IND AT 180 DEG
1-APS PB AND SIGN (RT ARROW) (PB2-2)
* 1-ONE WAY EVP DETECTOR AND
CONFIRMATORY LIGHT (PHASE 2)
LUMINAIRE-250W HPS
1-R9-3a SIGN (NO PEDS) FACING WEST
3" CONDUIT TO HH 10:
2-12/C #14
1-4/C #14
* 1-3/C #14
1-3/C #14 (LUM)
1-2/C #14
* 1-3/C #20
1-1/C #6 INS. GR.

(A) EQUIPMENT PAD (SEE DETAIL SHEET)
SERVICE CABINET (SSB)
CONTROLLER AND CABINET (STATE FURNISHED)

4" CONDUIT TO HH 1:	4" CONDUIT TO HH 12:
2-12/C #14	3-12/C #14
1-6/C #14	1-6/C #14
* 1-3/C #14	2-4/C #14
8-2/C #14	* 2-3/C #14
* 1-3/C #20	4-2/C #14
1-3/C #14 (CAMERA POWER)	* 2-3/C #20
1-7.5PR #24 (COM CABLE)	1-1/C #6 INS. GR.
1-COAXIAL CABLE	
1-1/C #6 INS. GR.	

2-2" AND 1-3" CONDUIT STUBBED OUT (CAPPED BOTH ENDS
3/4" CONDUIT STUBBED OUT (FOR TELEPHONE LINE)
1-1/2" CONDUIT TO TMS VAULT: (TO BE INSTALLED
ON TMS PLAN)
1-FO PIGTAIL (6-SM) (TO BE INSTALLED ON TMS PLAN)
** 1-1/2" CONDUIT TO FO VAULT:
** 1-FO PATCH CABLE (6-SM)
CONTROLLER CABINET TO SERVICE CABINET:
2" CONDUIT
2-1/C #6
1-1/C #6 INS. GR.
CONTROLLER CABINET TO SERVICE CABINET (COMMS):
2" CONDUIT
1-6PR #19 (SPARE)
SERVICE CABINET TO GROUND MOUNTED TRANSFORMER:
2" CONDUIT
3-1/C #2
SERVICE CABINET TO HH 12:
2" CONDUIT
2-3/C #14 (LUM)
HH 12 TO HH 1:
2" CONDUIT
1-3/C #14 (LUM)

(B) SOP-GROUND MOUNTED
TRANSFORMER (XCEL ENERGY)
2" CONDUIT INTO SERVICE CABINET:
3-1/C #2

40
SCALE IN FEET

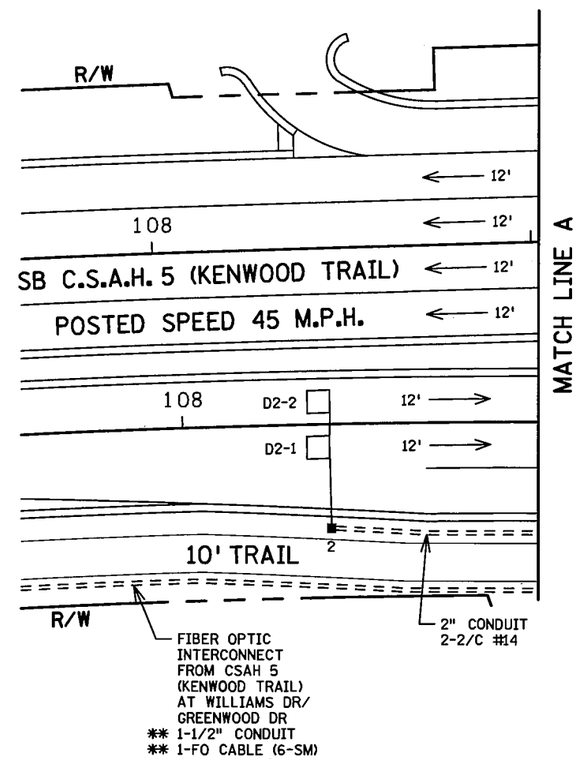

NOTES:
1. SEE SPECIAL PROVISIONS FOR STATE FURNISHED MATERIALS.
2. REFER TO "FOR INFORMATION ONLY" SHEETS FOR INPLACE SIGNAL COMPONENTS.
3. THE EXACT LOCATION OF HANDHOLES, POLES, LOOP DETECTORS AND EQUIPMENT PAD, SHALL BE VERIFIED IN THE FIELD BY MNDOT TRAFFIC OFFICE PERSONNEL.
4. THE CONTRACTOR IS RESPONSIBLE FOR COORDINATING THE CONNECTION OF THE POWER FOR THE TRAFFIC SIGNAL SYSTEM.
5. FOR TYPE D SIGNS SEE DETAIL SHEET. ALL SIGNS REQUIRED ARE INCLUDED IN PAYMENT FOR THE TRAFFIC CONTROL SIGNAL SYSTEM B PAY ITEM.
6. FOR PAVEMENT MARKINGS SEE STRIPING PLAN.
7. FOR PEDESTRIAN CURB RAMPS AND ASSOCIATED CONCRETE WORK SEE CONSTRUCTION PLAN.
8. THIS PLAN SPECIFIES CONDUIT SIZES, TYPES, AND GENERAL LOCATIONS. THE EXACT LOCATIONS WILL BE DETERMINED IN THE FIELD. CONDUITS UNDER THE ROADWAYS REQUIRE BORING.
9. ALL NEW CONDUIT SHALL BE PVC - SCHEDULE 80 OR HDPE SCHEDULE 80 AND SHALL CARRY 1/C#6 GREEN INSULATED GROUNDING CONDUCTOR AS SHOWN IN THE PLAN.
10. SALVAGE INPLACE X6-350/CAM 400 AND VIDEO CAMERA FROM INPLACE POLE 2 AND THEN INSTALL ON NEW POLE 2.
11. (NR) INDICATES C.S.A.H. 5 (KENWOOD TRAIL) (NORTH RAMP).
12. REMOVAL OF THE INPLACE SIGNAL SYSTEM IS INCLUDED IN THE PAYMENT FOR THE TRAFFIC CONTROL SIGNAL SYSTEM B PAY ITEM.
13. ITEMS DENOTED WITH AN * ARE INCLUDED IN PAYMENT FOR THE EVP SYSTEM B PAY ITEM.
14. ITEMS DENOTED WITH AN ** ARE INCLUDED IN PAYMENT FOR THE TRAFFIC CONTROL INTERCONNECTION PAY ITEM.

PLOTTED/REVISED: 6/12/2012
DISTRICT *: METRO
IPLOT NAME: notes & match lines B
PATH & FILENAME: IP_PWP:d1338009\T39428_sgl.dgn

BY	DATE	REVISIONS

SYSTEM ID: 39428 T.E. 5608
METER ADDRESS: 12659 COUNTY ROAD 5
MASTER ID: T.E.

MATCH LINE LAYOUT/INTERSECTION NOTES
TRAFFIC CONTROL SIGNAL SYSTEM B
T.H. 13 AT C.S.A.H. 5 (KENWOOD TRAIL) S. RAMP
IN BURNSVILLE, DAKOTA COUNTY

S.P. 179-020-031, S.P. 019-605-028 | DRAWN BY: GDS | CKD BY: EJA | DATE: 05-10-12
CERTIFIED BY Michael P. Gibrowsky (LICENSED PROFESSIONAL ENGINEER) LIC. NO. 19863 DATE: 06-12-12
STATE PROJ.NO. 1901-148 (T.H.13) SHEET NO. SS19 OF SS31 SHEETS

NOTES:
1. LUMINAIRES ARE UNMETERED.
2. SIGNAL SYSTEM INCLUDES BATTERY -BACKUP SERVICE CABINET (NO BATTERIES OR U.P.S.).
3. FOR CONDUCTOR COLOR CODE SEE TRAFFIC SIGNAL POLE WIRING CONNECTOR DETAIL.
4. ITEMS DENOTED WITH AN * ARE INCLUDED IN PAYMENT FOR THE EVP SYSTEM PAY ITEM.
5. ITEMS DENOTED WITH AN ** ARE INCLUDED IN PAYMENT FOR THE TRAFFIC CONTROL INTERCONNECTION PAY ITEM.

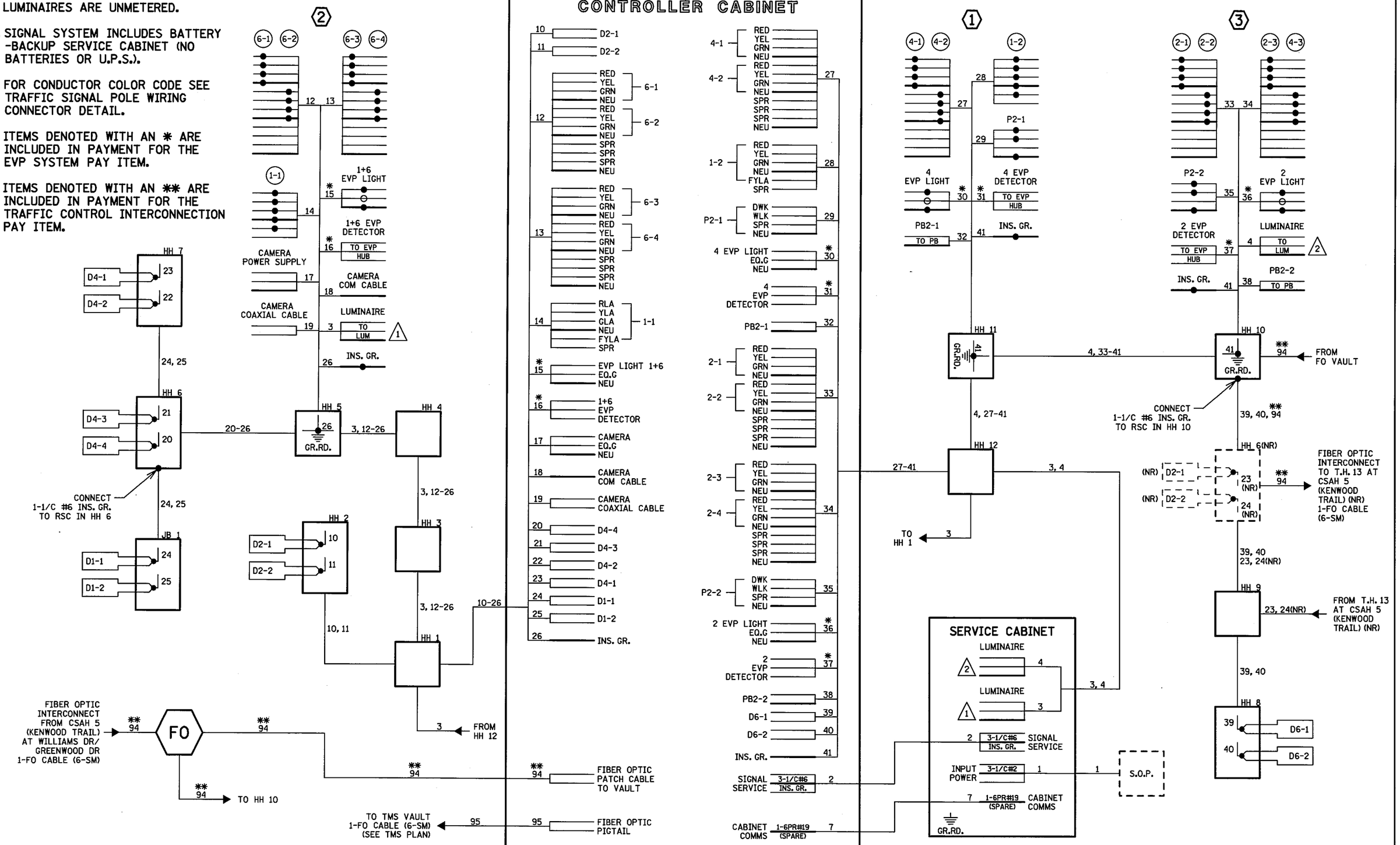

BY	DATE	REVISIONS

SYSTEM ID: 39428 T.E. 5608
METER ADDRESS: 12659 COUNTY ROAD 5
MASTER ID: T.E.

FIELD WIRING DIAGRAM
TRAFFIC CONTROL SIGNAL SYSTEM B
T.H. 13 AT C.S.A.H. 5 (KENWOOD TRAIL) S. RAMP
IN BURNSVILLE, DAKOTA COUNTY

S.P. 179-020-031, S.P. 019-605-028 | DRAWN BY: GDS | CKD BY: EJA | DATE: 05-09-12

CERTIFIED BY Michael P. Gabrinaly LICENSED PROFESSIONAL ENGINEER LIC. NO. 19863 DATE: 06-12-12

STATE PROJ.NO. 1901-148 (T.H.13) SHEET NO. SS20 OF SS31 SHEETS

PLOTTED/REVISED: 6/12/2012

DISTRICT #: METRO
IPLOT NAME: wiring B
PATH & FILENAME: IP_PWP-dl338009\T39428_sgl.dgn

NOTES:
1. SEE SPECIAL PROVISIONS FOR STATE FURNISHED MATERIALS.
2. REFER TO "FOR INFORMATION ONLY" SHEETS FOR INPLACE SIGNAL COMPONENTS.
3. THE EXACT LOCATION OF HANDHOLES, POLES, LOOP DETECTORS AND EQUIPMENT PAD, SHALL BE VERIFIED IN THE FIELD BY MNDOT TRAFFIC OFFICE PERSONNEL.
4. THE CONTRACTOR IS RESPONSIBLE FOR COORDINATING THE CONNECTION OF THE POWER FOR THE TRAFFIC SIGNAL SYSTEM.
5. FOR TYPE D SIGNS SEE DETAIL SHEET. ALL SIGNS REQUIRED ARE INCLUDED IN PAYMENT FOR THE TRAFFIC CONTROL SIGNAL SYSTEM C PAY ITEM.
6. FOR PAVEMENT MARKINGS SEE STRIPING PLAN.
7. FOR PEDESTRIAN CURB RAMPS AND ASSOCIATED CONCRETE WORK SEE CONSTRUCTION PLAN.
8. THIS PLAN SPECIFIES CONDUIT SIZES, TYPES, AND GENERAL LOCATIONS. THE EXACT LOCATIONS WILL BE DETERMINED IN THE FIELD. CONDUITS UNDER THE ROADWAYS REQUIRE BORING.
9. ALL NEW CONDUIT SHALL BE PVC - SCHEDULE 80 OR HDPE SCHEDULE 80 AND SHALL CARRY 1/C#6 GREEN INSULATED GROUNDING CONDUCTOR AS SHOWN IN THE PLAN.
10. (SR) INDICATES C.S.A.H. 5 (KENWOOD TRAIL) (SOUTH RAMP).
11. ITEMS DENOTED WITH AN * ARE INCLUDED IN PAYMENT FOR THE EVP SYSTEM C PAY ITEM.
12. ITEMS DENOTED WITH AN ** ARE INCLUDED IN PAYMENT FOR THE TRAFFIC CONTROL INTERCONNECTION PAY ITEM.

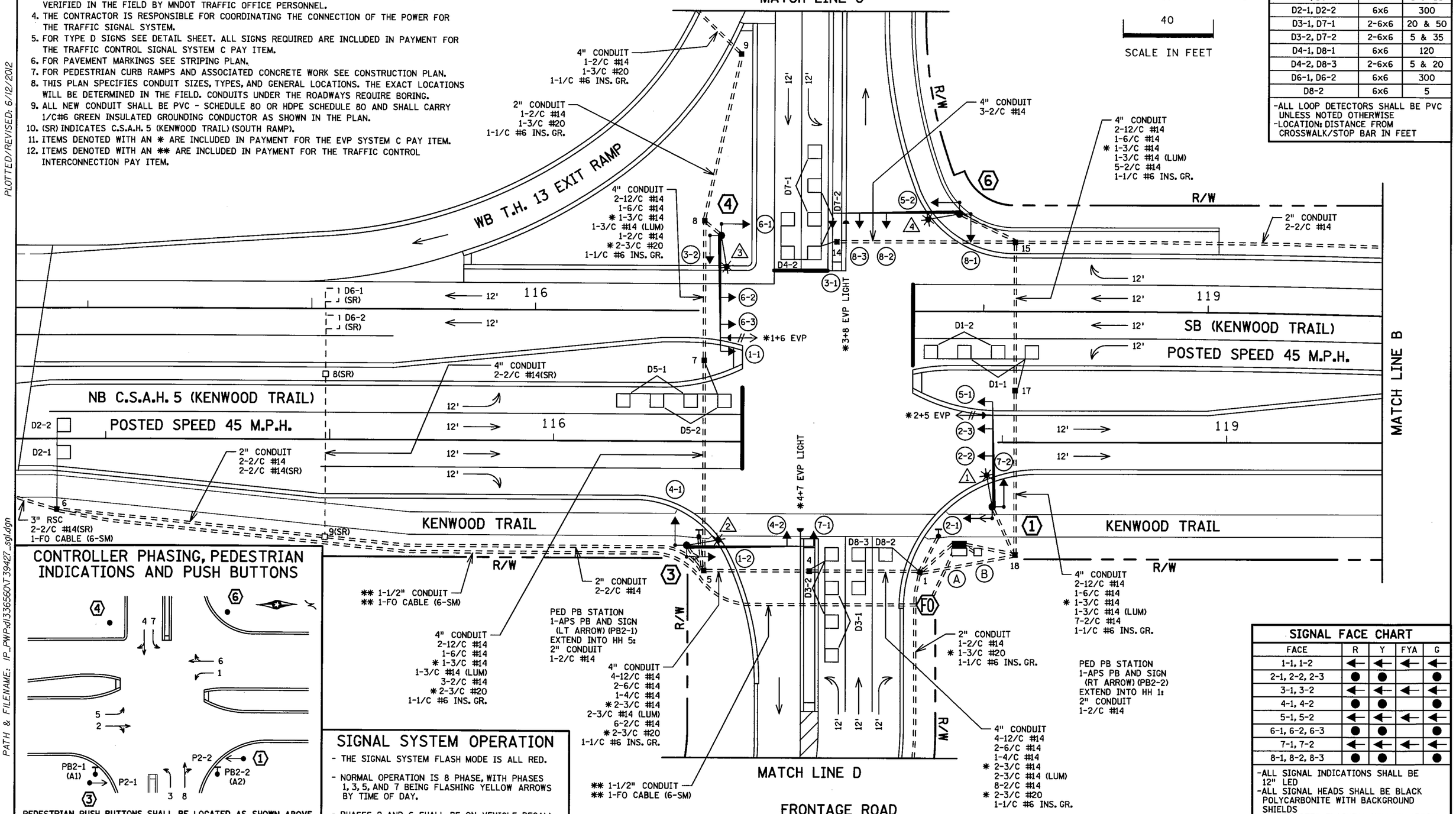

LOOP DETECTOR CHART

NUMBER	SIZE (FT)	LOCATION
D1-1, D5-1	2-6x6	20 & 50
D1-2, D5-2	2-6x6	5 & 35
D2-1, D2-2	6x6	300
D3-1, D7-1	2-6x6	20 & 50
D3-2, D7-2	2-6x6	5 & 35
D4-1, D8-1	6x6	120
D4-2, D8-3	2-6x6	5 & 20
D6-1, D6-2	6x6	300
D8-2	6x6	5

-ALL LOOP DETECTORS SHALL BE PVC UNLESS NOTED OTHERWISE
-LOCATION: DISTANCE FROM CROSSWALK/STOP BAR IN FEET

CONTROLLER PHASING, PEDESTRIAN INDICATIONS AND PUSH BUTTONS

PEDESTRIAN PUSH BUTTONS SHALL BE LOCATED AS SHOWN ABOVE

SIGNAL SYSTEM OPERATION

- THE SIGNAL SYSTEM FLASH MODE IS ALL RED.
- NORMAL OPERATION IS 8 PHASE, WITH PHASES 1, 3, 5, AND 7 BEING FLASHING YELLOW ARROWS BY TIME OF DAY.
- PHASES 2 AND 6 SHALL BE ON VEHICLE RECALL.

SIGNAL FACE CHART

FACE	R	Y	FYA	G
1-1, 1-2	←	←	←	←
2-1, 2-2, 2-3	●	●		●
3-1, 3-2	←	←	←	←
4-1, 4-2	●	●		●
5-1, 5-2	←	←	←	←
6-1, 6-2, 6-3	●	●		●
7-1, 7-2	←	←	←	←
8-1, 8-2, 8-3	●	●		●

-ALL SIGNAL INDICATIONS SHALL BE 12" LED
-ALL SIGNAL HEADS SHALL BE BLACK POLYCARBONITE WITH BACKGROUND SHIELDS
-FYA DENOTES FLASHING YELLOW ARROW

BY	DATE	REVISIONS

SYSTEM ID: 39427 T.E. 5607
METER ADDRESS: 12707 COUNTY ROAD 5
MASTER ID: T.E.

INTERSECTION LAYOUT
TRAFFIC CONTROL SIGNAL SYSTEM C
T.H. 13 AT C.S.A.H. 5 (KENWOOD TRAIL) N. RAMP
IN BURNSVILLE, DAKOTA COUNTY

S.P. 179-020-031, S.P. 019-605-028 | DRAWN BY: GDS | CKD BY: EJA | DATE: 05-09-12

CERTIFIED BY Michael P. Gubrusky LICENSED PROFESSIONAL ENGINEER LIC. NO. 19863 DATE: 06-12-12

STATE PROJ.NO. 1901-148 (T.H.13) SHEET NO. SS21 OF SS31 SHEETS

PLOTTED/REVISED: 6/12/2012
DISTRICT *: METRO
IPLOT NAME: layout C
PATH & FILENAME: IP_PWP:d13356OT39427_sgl.dgn

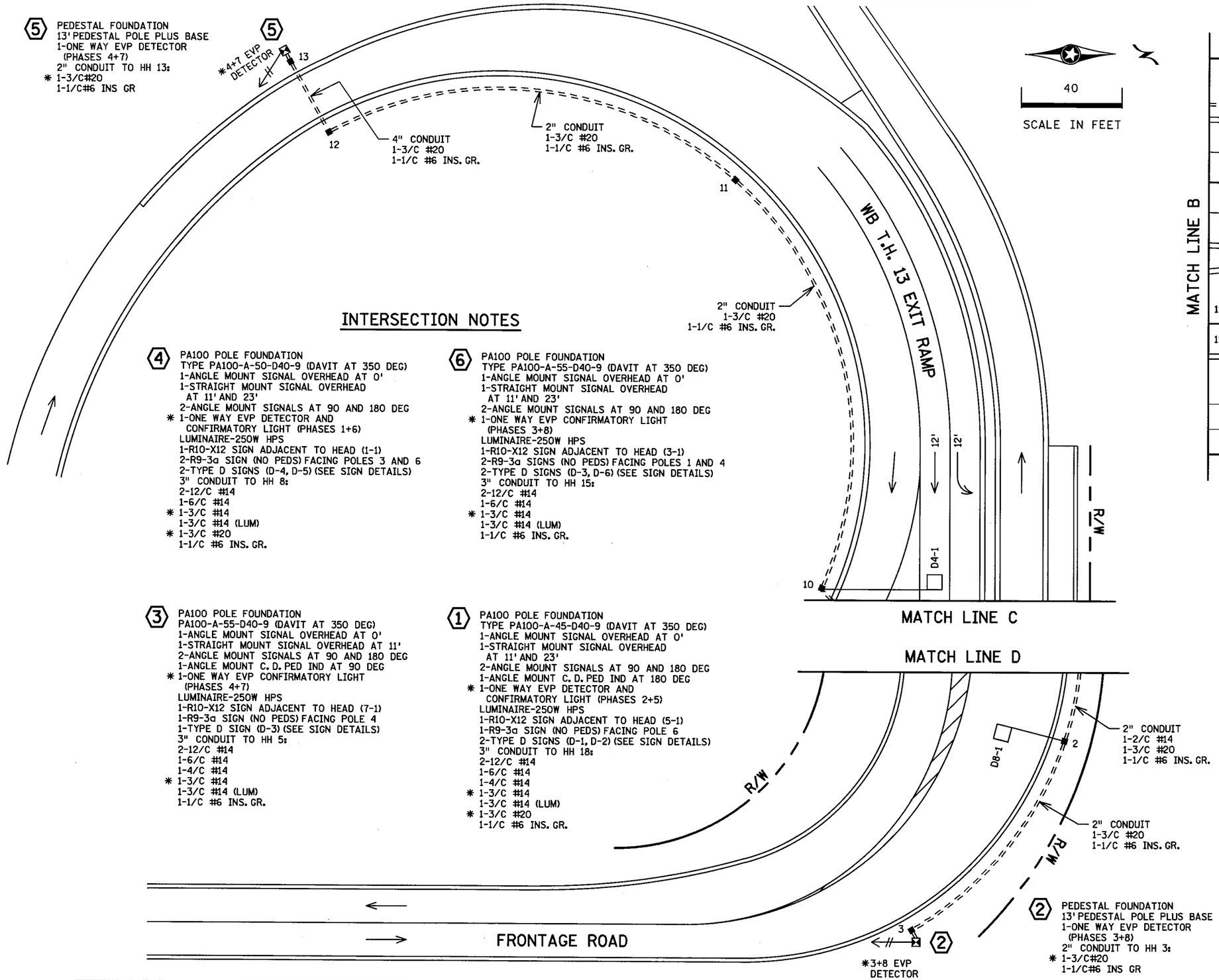

INTERSECTION NOTES

4 PA100 POLE FOUNDATION
TYPE PA100-A-50-D40-9 (DAVIT AT 350 DEG)
1-ANGLE MOUNT SIGNAL OVERHEAD AT 0'
1-STRAIGHT MOUNT SIGNAL OVERHEAD
AT 11' AND 23'
2-ANGLE MOUNT SIGNALS AT 90 AND 180 DEG
* 1-ONE WAY EVP DETECTOR AND
CONFIRMATORY LIGHT (PHASES 1+6)
LUMINAIRE-250W HPS
1-R10-X12 SIGN ADJACENT TO HEAD (1-1)
2-R9-3a SIGN (NO PEDS) FACING POLES 3 AND 6
2-TYPE D SIGNS (D-4, D-5) (SEE SIGN DETAILS)
3" CONDUIT TO HH 8:
2-12/C #14
1-6/C #14
* 1-3/C #14
1-3/C #14 (LUM)
* 1-3/C #20
1-1/C #6 INS. GR.

6 PA100 POLE FOUNDATION
TYPE PA100-A-55-D40-9 (DAVIT AT 350 DEG)
1-ANGLE MOUNT SIGNAL OVERHEAD AT 0'
1-STRAIGHT MOUNT SIGNAL OVERHEAD
AT 11' AND 23'
2-ANGLE MOUNT SIGNALS AT 90 AND 180 DEG
* 1-ONE WAY EVP CONFIRMATORY LIGHT
(PHASES 3+8)
LUMINAIRE-250W HPS
1-R10-X12 SIGN ADJACENT TO HEAD (3-1)
2-R9-3a SIGNS (NO PEDS) FACING POLES 1 AND 4
2-TYPE D SIGNS (D-3, D-6) (SEE SIGN DETAILS)
3" CONDUIT TO HH 15:
2-12/C #14
1-6/C #14
* 1-3/C #14
1-3/C #14 (LUM)
1-1/C #6 INS. GR.

3 PA100 POLE FOUNDATION
PA100-A-55-D40-9 (DAVIT AT 350 DEG)
1-ANGLE MOUNT SIGNAL OVERHEAD AT 0'
1-STRAIGHT MOUNT SIGNAL OVERHEAD AT 11'
2-ANGLE MOUNT SIGNALS AT 90 AND 180 DEG
1-ANGLE MOUNT C.D. PED IND AT 90 DEG
* 1-ONE WAY EVP CONFIRMATORY LIGHT
(PHASES 4+7)
LUMINAIRE-250W HPS
1-R10-X12 SIGN ADJACENT TO HEAD (7-1)
1-R9-3a SIGN (NO PEDS) FACING POLE 4
1-TYPE D SIGN (D-3) (SEE SIGN DETAILS)
3" CONDUIT TO HH 5:
2-12/C #14
1-6/C #14
1-4/C #14
* 1-3/C #14
1-3/C #14 (LUM)
1-1/C #6 INS. GR.

1 PA100 POLE FOUNDATION
TYPE PA100-A-45-D40-9 (DAVIT AT 350 DEG)
1-ANGLE MOUNT SIGNAL OVERHEAD AT 0'
1-STRAIGHT MOUNT SIGNAL OVERHEAD
AT 11' AND 23'
2-ANGLE MOUNT SIGNALS AT 90 AND 180 DEG
1-ANGLE MOUNT C.D. PED IND AT 180 DEG
* 1-ONE WAY EVP DETECTOR AND
CONFIRMATORY LIGHT (PHASES 2+5)
LUMINAIRE-250W HPS
1-R10-X12 SIGN ADJACENT TO HEAD (5-1)
1-R9-3a SIGN (NO PEDS) FACING POLE 6
2-TYPE D SIGNS (D-1, D-2) (SEE SIGN DETAILS)
3" CONDUIT TO HH 18:
2-12/C #14
1-6/C #14
1-4/C #14
* 1-3/C #14
1-3/C #14 (LUM)
* 1-3/C #20
1-1/C #6 INS. GR.

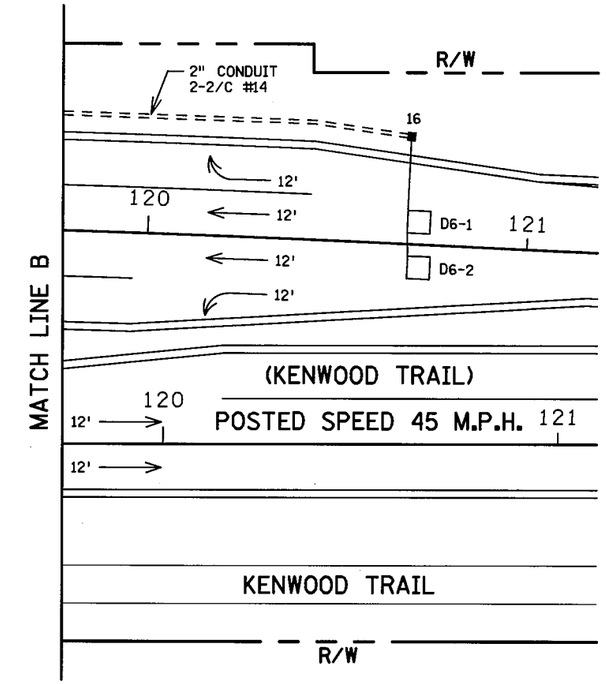

A EQUIPMENT PAD (SEE DETAIL SHEET)
SERVICE CABINET (SSB)
CONTROLLER AND CABINET (STATE FURNISHED)

4" CONDUIT TO HH 1:	4" CONDUIT TO HH 18:
4-12/C #14	4-12/C #14
2-6/C #14	2-6/C #14
* 2-3/C #14	1-4/C #14
12-2/C #14	* 2-3/C #14
* 3-3/C #20	7-2/C #14
1-1/C #6 INS. GR.	* 1-3/C #20
	1-1/C #6 INS. GR.

2-2" AND 1-3" CONDUIT STUBBED OUT (CAPPED BOTH ENDS
3/4" CONDUIT STUBBED OUT (FOR TELEPHONE LINE)
CONTROLLER CABINET TO SERVICE CABINET:
2" CONDUIT
2-1/C #6
1-1/C #6 INS. GR.
CONTROLLER CABINET TO SERVICE CABINET (COMMS):
2" CONDUIT
1-6PR #19 (SPARE)
SERVICE CABINET TO GROUND MOUNTED TRANSFORMER:
2" CONDUIT
3-1/C #2
SERVICE CABINET TO HH 18:
2" CONDUIT
4-3/C #14 (LUM)
HH 18 TO HH 1:
2" CONDUIT
2-3/C #14 (LUM)

B SOP-GROUND MOUNTED
TRANSFORMER (XCEL ENERGY)
2" CONDUIT INTO SERVICE CABINET:
3-1/C #2

BY	DATE	REVISIONS

SYSTEM ID: 39427 T.E. 5607
METER ADDRESS: 12707 COUNTY ROAD 5
MASTER ID: T.E.

MATCH LINE LAYOUT/INTERSECTION NOTES
TRAFFIC CONTROL SIGNAL SYSTEM C
T.H. 13 AT C.S.A.H. 5 (KENWOOD TRAIL) N. RAMP
IN BURNSVILLE, DAKOTA COUNTY

S.P. 179-020-031, S.P. 019-605-028 | DRAWN BY: GDS | CKD BY: EJA | DATE: 05-09-12
CERTIFIED BY Michael P. Gibinsky LICENSED PROFESSIONAL ENGINEER LIC. NO. 19863 DATE: 06-12-12
STATE PROJ. NO. 1901-148 (T.H.13) SHEET NO. SS22 OF SS31 SHEETS

PLOTTED/REVISED: 6/12/2012
DISTRICT *: METRO
IPLOT NAME: match lines & notes C
PATH & FILENAME: IP_PWP:dl33650\T39427_sgl.dgn

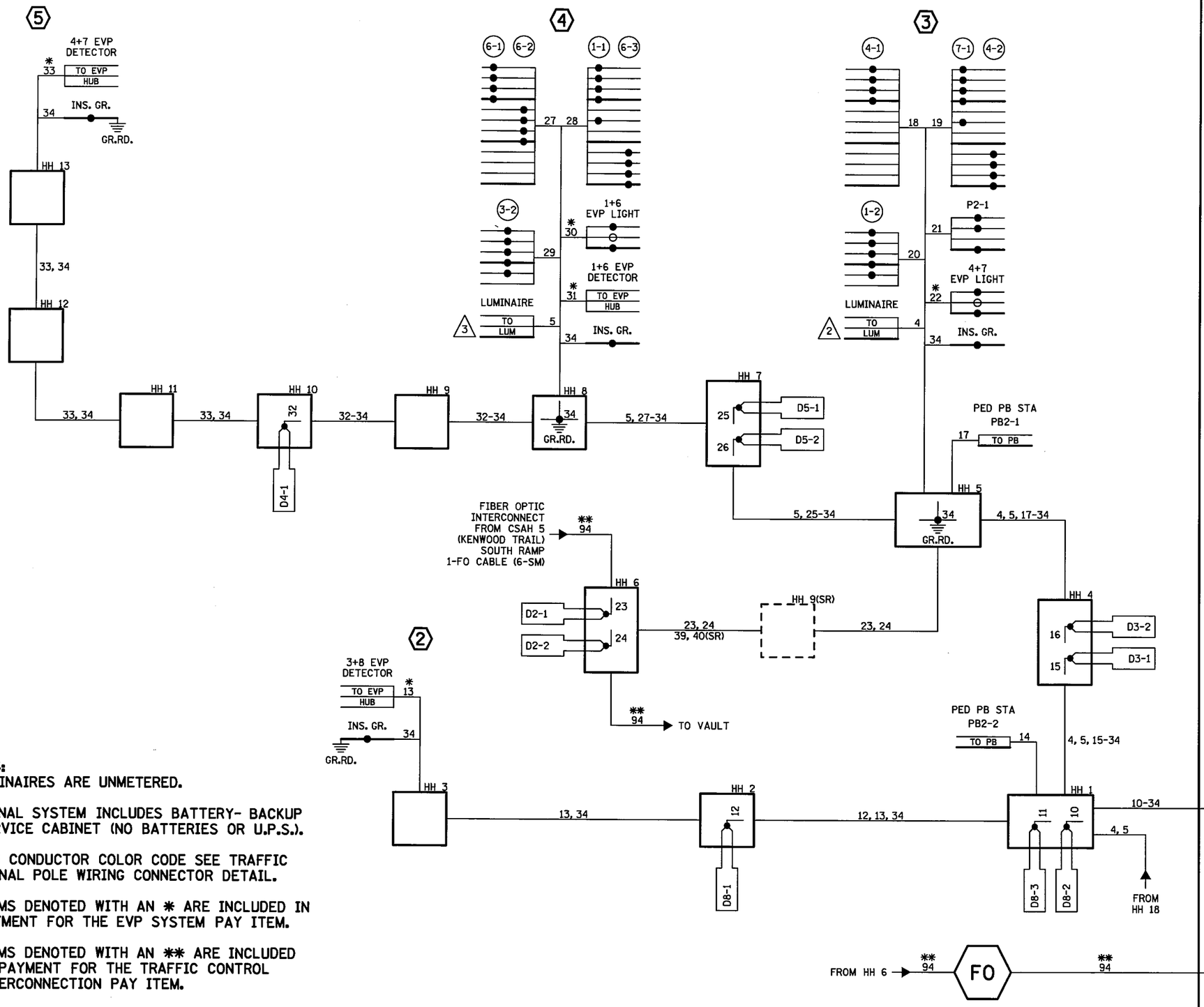

CONTROLLER CABINET

10	D8-2	
11	D8-3	
12	D8-1	
* 13	3+8 EVP DETECTOR	
14	PB2-2	
15	D3-1	
16	D3-2	
17	PB2-1	
18	RED	4-1
	YEL	
	GRN	
	NEU	
	SPR	
	SPR	
	SPR	
	NEU	
	SPR	
	SPR	
	SPR	
	NEU	
19	RLA	7-1
	YLA	
	GLA	
	NEU	
	SPR	
	FYLA	
	SPR	
	NEU	
	RED	4-2
	YEL	
	GRN	
	NEU	
20	RLA	1-2
	YLA	
	GLA	
	NEU	
	FYLA	
	SPR	
21	DWK	P2-1
	WLK	
	SPR	
	NEU	
* 22	EVP LIGHT 4+7	
	EQ.G	
	NEU	
23	D2-1	
24	D2-2	
25	D5-1	
26	D5-2	
27	RED	6-1
	YEL	
	GRN	
	NEU	
	RED	6-2
	YEL	
	GRN	
	NEU	
	SPR	
	SPR	
	SPR	
	NEU	
34	INS. GR.	
* 33	4+7 EVP DETECTOR	
32	D4-1	
* 31	1+6 EVP DETECTOR	
* 30	EVP LIGHT 1+6	
	EQ.G	
	NEU	
29	RLA	3-2
	YLA	
	GLA	
	NEU	
	FYLA	
	SPR	
28	RLA	1-1
	YLA	
	GLA	
	NEU	
	SPR	
	FYLA	
	SPR	
	NEU	
	RED	6-3
	YEL	
	GRN	
	NEU	
** 94	FIBER OPTIC PATCH CABLE TO VAULT	

NOTES:

1. LUMINAIRES ARE UNMETERED.
2. SIGNAL SYSTEM INCLUDES BATTERY- BACKUP SERVICE CABINET (NO BATTERIES OR U.P.S.).
3. FOR CONDUCTOR COLOR CODE SEE TRAFFIC SIGNAL POLE WIRING CONNECTOR DETAIL.
4. ITEMS DENOTED WITH AN * ARE INCLUDED IN PAYMENT FOR THE EVP SYSTEM PAY ITEM.
5. ITEMS DENOTED WITH AN ** ARE INCLUDED IN PAYMENT FOR THE TRAFFIC CONTROL INTERCONNECTION PAY ITEM.

BY	DATE	REVISIONS

SYSTEM ID: 39427 T.E. 5607
METER ADDRESS: 12707 COUNTY ROAD 5
MASTER ID: T.E.

FIELD WIRING DIAGRAM (1 OF 2)
TRAFFIC CONTROL SIGNAL SYSTEM C
T.H. 13 AT C.S.A.H. 5 (KENWOOD TRAIL) N. RAMP
IN BURNSVILLE, DAKOTA COUNTY

S.P. 179-020-031, S.P. 019-605-028 | DRAWN BY: GDS | CKD BY: EJA | DATE: 05-09-12

CERTIFIED BY Michael P. Gibinsky LICENSED PROFESSIONAL ENGINEER LIC. NO. 19863 DATE: 06-12-12

STATE PROJ.NO. 1901-148 (T.H.13) SHEET NO. SS23 OF SS31 SHEETS

PLOTTED/REVISED: 6/12/2012
DISTRICT *: METRO
IPLOT NAME: wiring 1C
PATH & FILENAME: IP_PWP:dl336560\T39427_sgl.dgn

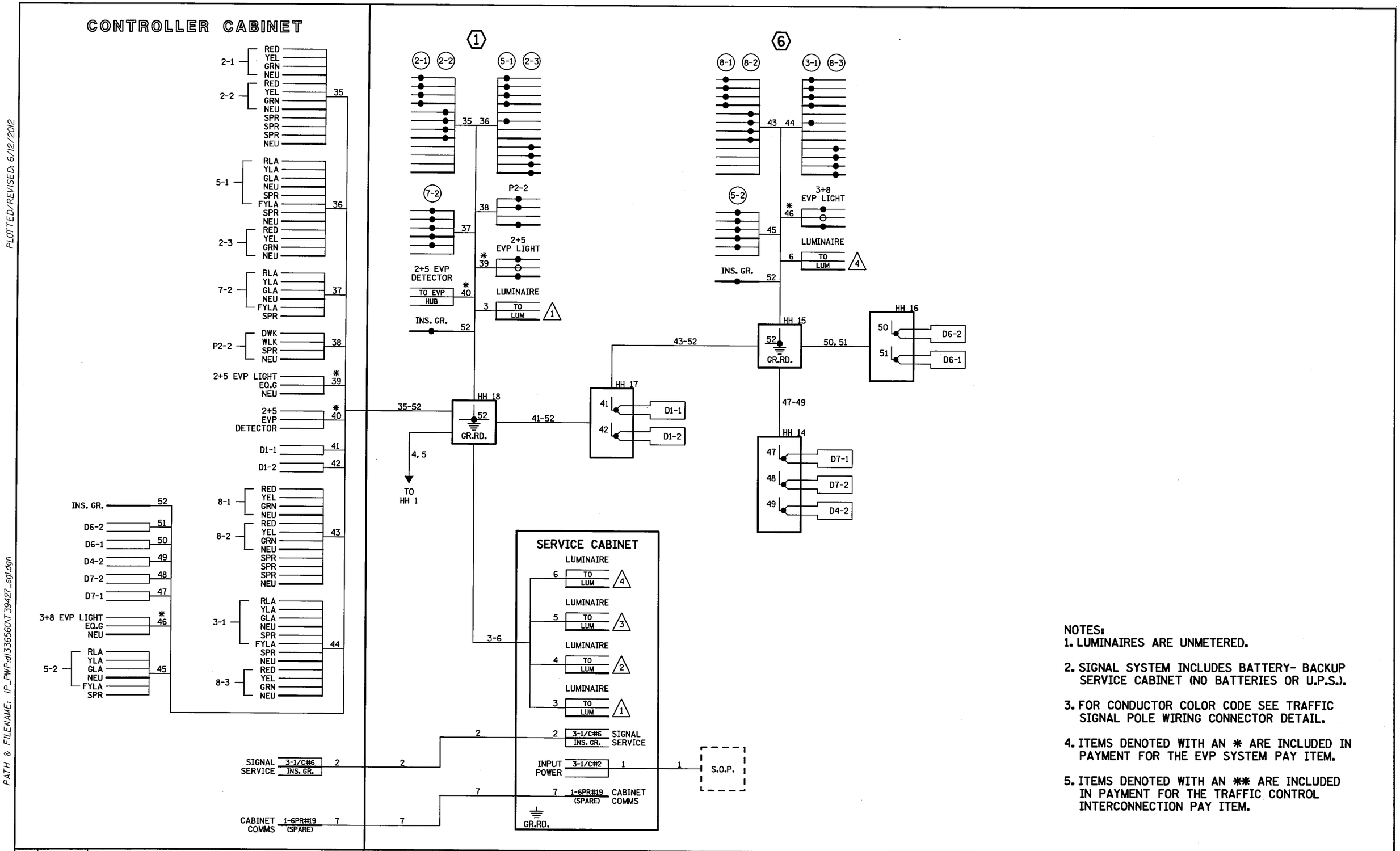

NOTES:

1. LUMINAIRES ARE UNMETERED.
2. SIGNAL SYSTEM INCLUDES BATTERY- BACKUP SERVICE CABINET (NO BATTERIES OR U.P.S.).
3. FOR CONDUCTOR COLOR CODE SEE TRAFFIC SIGNAL POLE WIRING CONNECTOR DETAIL.
4. ITEMS DENOTED WITH AN ✱ ARE INCLUDED IN PAYMENT FOR THE EVP SYSTEM PAY ITEM.
5. ITEMS DENOTED WITH AN ✱✱ ARE INCLUDED IN PAYMENT FOR THE TRAFFIC CONTROL INTERCONNECTION PAY ITEM.

BY	DATE	REVISIONS

SYSTEM ID: 39427 T.E. 5607
METER ADDRESS: 12707 COUNTY ROAD 5
MASTER ID: T.E.

FIELD WIRING DIAGRAM (2 OF 2)
TRAFFIC CONTROL SIGNAL SYSTEM C
T.H. 13 AT C.S.A.H. 5 (KENWOOD TRAIL) N. RAMP
IN BURNSVILLE, DAKOTA COUNTY

S.P. 179-020-031, S.P. 019-605-028 | DRAWN BY: GDS | CKD BY: EJA | DATE: 05-09-12

CERTIFIED BY Michael P. Gibraltar (LICENSED PROFESSIONAL ENGINEER) LIC. NO. 19863 DATE: 06-12-12

STATE PROJ.NO. 1901-148 (T.H.13) SHEET NO. SS24 OF SS31 SHEETS

PLOTTED/REVISED: 6/12/2012

DISTRICT *: METRO
IPLOT NAME: wiring 2 C
PATH & FILENAME: IP_PWP-d1336560\739427_sgl.dgn

LED SIGNAL FACES					
SIGNAL FACE	ALL SIGNAL INDICATIONS SHALL BE 12".				
	R	Y	G	Y	G
2-1, 2-2	o	o	o		
2-3, 2-4	o	o	o	←	←
4-1, 4-2, 4-3	o	o	o		
6-1, 6-2	o	o	o		
6-3, 6-4	o	o	o	←	←
8-1, 8-2, 8-3	o	o	o		

SIGNAL HEAD PHASING

N.M.C. LOOP DETECTORS			
NUMBER	SIZE (FT.)	LOCATION	STATUS
D1-1	2-6x6	20' & 50'	F & I
D1-2	2-6x6	5' & 35'	F & I
D2-1	6x6	250'	INPLACE
D2-2	6x6	250'	INPLACE
D4-1	6x6	130'	INPLACE
D4-2	2-6x6	5' & 20'	INPLACE
D4-3	2-6x6	5' & 20'	INPLACE
D5-1	2-6x6	20' & 50'	INPLACE
D5-2	2-6x6	5' & 35'	INPLACE
D6-1	6x6	250'	F & I
D6-2	6x6	250'	F & I
D8-1	6x6	130'	INPLACE
D8-2	2-6x10	5' & 25'	INPLACE

NOTE: LOCATION = DISTANCE FROM CROSSWALK TO FRONT OF DETECTOR.

FUNCTIONS:

1) = CALL & EXTEND
2) = EXTEND ONLY

40

SCALE IN FEET

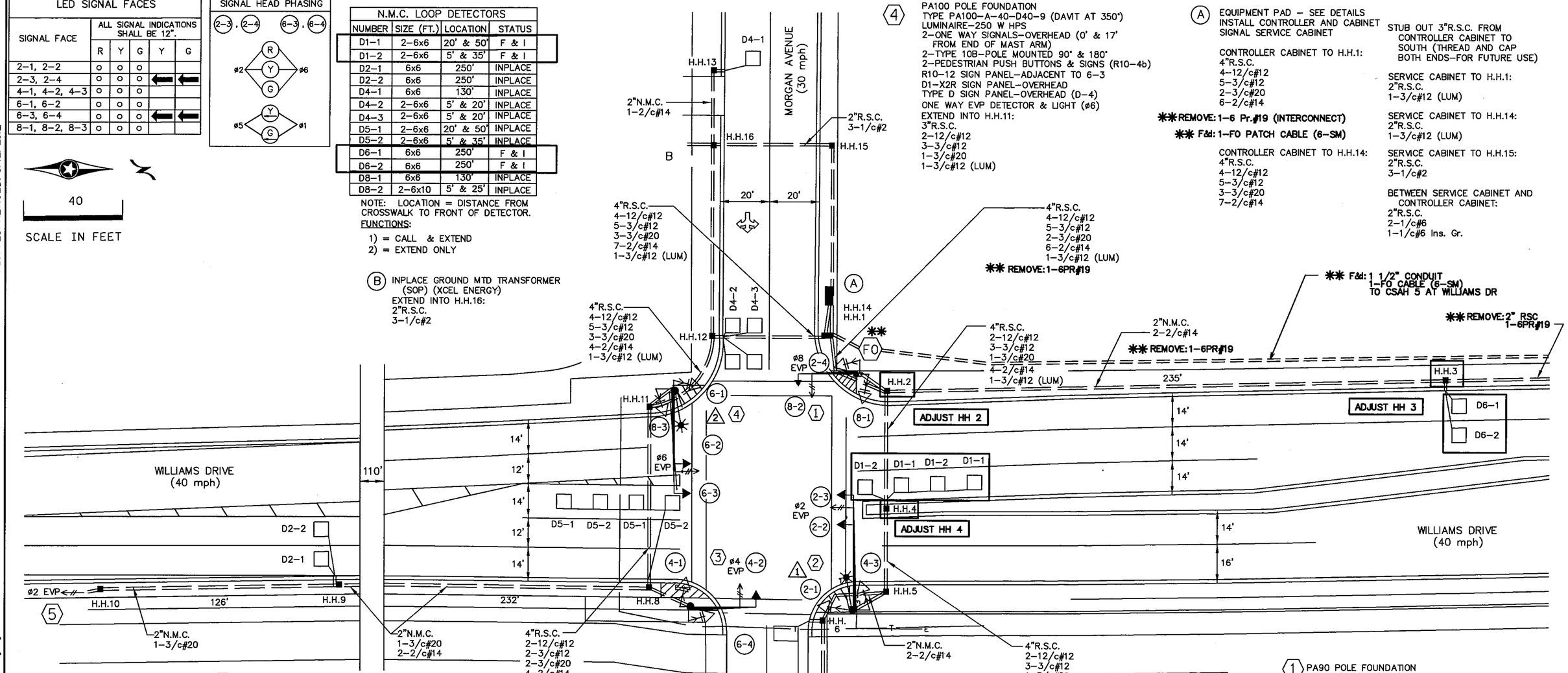

4 PA100 POLE FOUNDATION
TYPE PA100-A-40-D40-9 (DAVIT AT 350°)
LUMINAIRE-250 W HPS
2-ONE WAY SIGNALS-OVERHEAD (0' & 17' FROM END OF MAST ARM)
2-TYPE 10B-POLE MOUNTED 90° & 180°
2-PEDESTRIAN PUSH BUTTONS & SIGNS (R10-4b)
R10-12 SIGN PANEL-ADJACENT TO 6-3
D1-X2R SIGN PANEL-OVERHEAD
TYPE D SIGN PANEL-OVERHEAD (D-4)
ONE WAY EVP DETECTOR & LIGHT (ø6)
EXTEND INTO H.H.11:
3"R.S.C.
2-12/c#12
3-3/c#12
1-3/c#20
1-3/c#12 (LUM)

A EQUIPMENT PAD - SEE DETAILS
INSTALL CONTROLLER AND CABINET
SIGNAL SERVICE CABINET

CONTROLLER CABINET TO H.H.1:
4"R.S.C.
4-12/c#12
5-3/c#12
2-3/c#20
6-2/c#14

** REMOVE: 1-6 Pr.#19 (INTERCONNECT)
** F&I: 1-FO PATCH CABLE (6-SM)

CONTROLLER CABINET TO H.H.14:
4"R.S.C.
4-12/c#12
5-3/c#12
3-3/c#20
7-2/c#14

STUB OUT 3"R.S.C. FROM CONTROLLER CABINET TO SOUTH (THREAD AND CAP BOTH ENDS-FOR FUTURE USE)

SERVICE CABINET TO H.H.1:
2"R.S.C.
1-3/c#12 (LUM)

SERVICE CABINET TO H.H.14:
2"R.S.C.
1-3/c#12 (LUM)

SERVICE CABINET TO H.H.15:
2"R.S.C.
3-1/c#2

BETWEEN SERVICE CABINET AND CONTROLLER CABINET:
2"R.S.C.
2-1/c#6
1-1/c#6 Ins. Gr.

4"R.S.C.
4-12/c#12
5-3/c#12
2-3/c#20
6-2/c#14
1-3/c#12 (LUM)
** REMOVE: 1-6PR#19

** F&I: 1 1/2" CONDUIT
1-FO CABLE (6-SM)
TO CSAH 5 AT WILLIAMS DR

** REMOVE: 2" RSC
1-6PR#19

B INPLACE GROUND MTD TRANSFORMER (SOP) (XCEL ENERGY)
EXTEND INTO H.H.16:
2"R.S.C.
3-1/c#2

5 PEDESTAL FOUNDATION
10' PEDESTAL POLE AND BASE BRACKETING FOR TOP MOUNTING OF EVP DETECTOR
ONE WAY EVP DETECTOR-MOUNT ON TOP OF PEDESTAL POLE (SEE DETAILS) (ø2)
W3-3 SIGN PANEL
EXTEND INTO H.H.10:
2"R.S.C.
1-3/c#20

3 PA85 POLE FOUNDATION
TYPE PA85-A-25
ONE WAY SIGNAL-OVERHEAD
2-TYPE 10B-POLE MOUNTED 90° & 180°
2-PEDESTRIAN PUSH BUTTONS & SIGNS (R10-4b)
TYPE D SIGN PANEL-OVERHEAD (D-3)
ONE WAY EVP DETECTOR & LIGHT (ø4)
EXTEND INTO H.H.8:
3"R.S.C.
2-12/c#12
2-3/c#12
1-3/c#20

2 PA100 POLE FOUNDATION
TYPE PA100-A-45-D40-9 (DAVIT AT 350°)
LUMINAIRE-250 W HPS
2-ONE WAY SIGNALS-OVERHEAD (2' & 19' FROM END OF MAST ARM) (CAP END MOUNT)
2-TYPE 10B-POLE MOUNTED 90° & 270°
2-PEDESTRIAN PUSH BUTTONS & SIGNS (R10-4b)
R10-12 SIGN PANEL-ADJACENT TO 2-3
TYPE D SIGN PANEL-OVERHEAD (D-2)
ONE WAY EVP DETECTOR & LIGHT (ø2)
EXTEND INTO H.H.5:
3"R.S.C.
2-12/c#12
3-3/c#12
1-3/c#20
1-3/c#12 (LUM)

1 PA90 POLE FOUNDATION
TYPE PA90-A-30
ONE WAY SIGNAL-OVERHEAD
2-TYPE 10B-POLE MOUNTED 90° & 180°
2-PEDESTRIAN PUSH BUTTONS & SIGNS (R10-4b)
TYPE D SIGN PANEL-OVERHEAD (D-1)
ONE WAY EVP DETECTOR & LIGHT (ø8)
EXTEND INTO H.H.2:
3"R.S.C.
2-12/c#12
2-3/c#12
1-3/c#20

CONTROLLER PHASING, PEDESTRIAN INDICATIONS AND PUSH BUTTONS

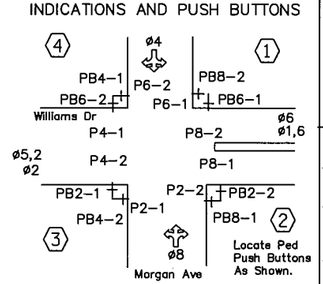

SIGNAL SYSTEM OPERATIONS:

- SIGNAL SYSTEM FLASH MODE SHALL BE ALL RED.
- NORMAL OPERATION SHALL BE 6 PHASE, WITH PHASES 1 AND 5 BEING PROTECTED/PERMISSIVE LEFT TURN PHASES.
- VEHICLE SIGNAL PHASES 2 AND 6 SHALL OPERATE ON RECALL.

NOTES:

1. ITEMS DENOTED WITH AN ** ARE INCLUDED IN PAYMENT FOR THE TRAFFIC CONTROL INTERCONNECTION PAY ITEM.
2. ALL ITEMS ARE INPLACE UNLESS NOTED BY [ ]
3. SEE SPECIAL PROVISIONS FOR STATE FURNISHED MATERAILS.
4. THE EXCACT LOCATION OF LOOP DETECTORS SHALL BE VERIFIED IN THE FIELD BY THE CITY OF BURNSVILLE TRAFFIC OFFICE PERSONNEL.

BY	DATE	REVISIONS

SYSTEM ID: 39447 T.E. 5652
METER ADDRESS:
MASTER ID: T.E.

INTERSECTION LAYOUT
REVISE SIGNAL SYSTEM
WILLIAMS DRIVE AT MORGAN AVENUE
IN BURNSVILLE, DAKOTA COUNTY

S.P. NO. 179-020-031, SP 019-605-028 | DRAWN BY: SJK | CKD BY: EJA | DATE: 05-09-12

CERTIFIED BY Michael P. Gibrosky LICENSED PROFESSIONAL ENGINEER LIC. NO. 19863 DATE: 06-12-12

STATE PROJ.NO. 1901-148 (T.H.13) SHEET NO. SS25 OF SS31 SHEETS

PLOTTED/REVISED: 6/12/2012

DISTRICT #: METRO
IPLOT NAME: Williams layout
PATH & FILENAME: IP_PWP:d1472164VT39447_sgl.dgn

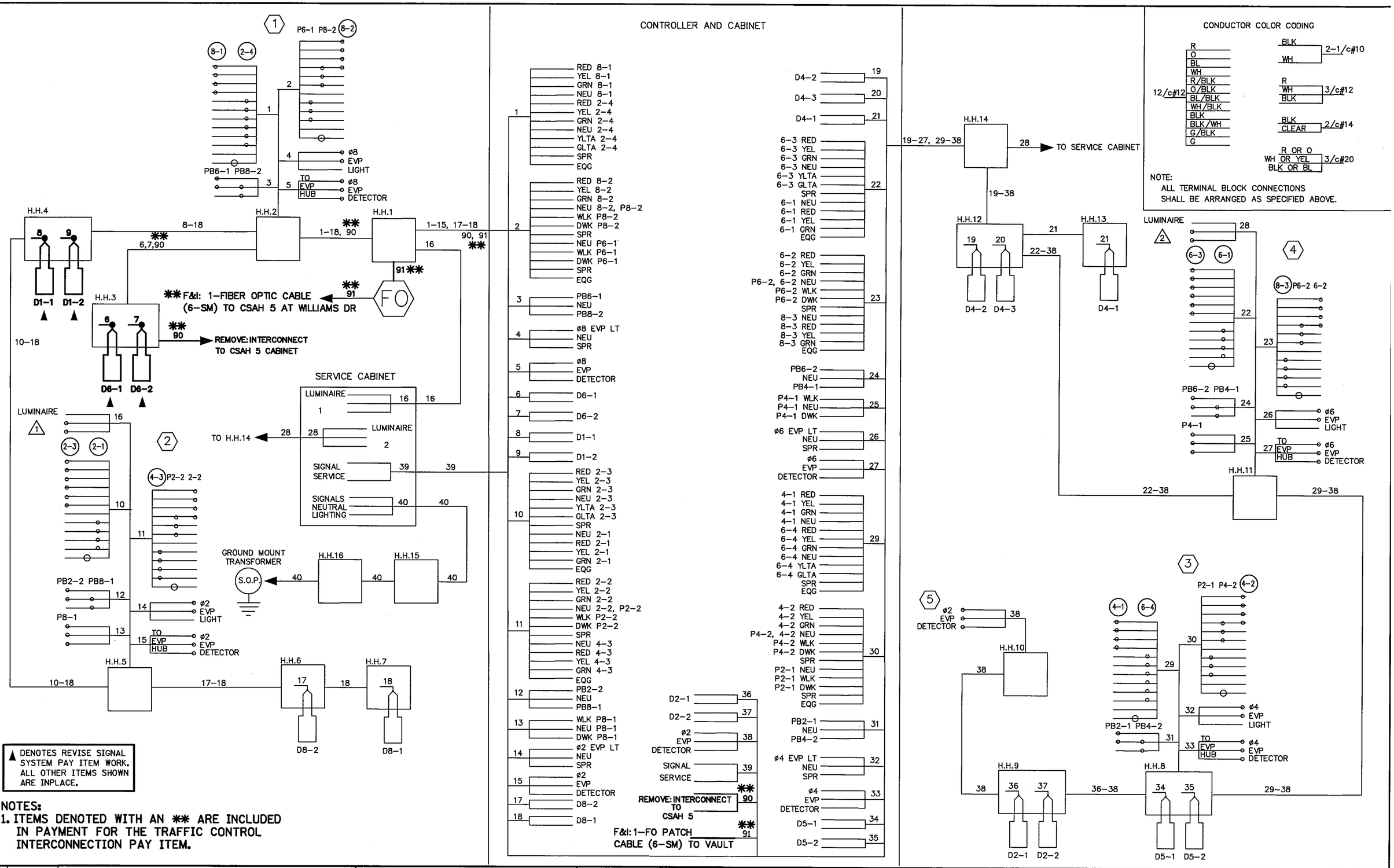

▲ DENOTES REVISE SIGNAL SYSTEM PAY ITEM WORK. ALL OTHER ITEMS SHOWN ARE INPLACE.

NOTES:

1. ITEMS DENOTED WITH AN ** ARE INCLUDED IN PAYMENT FOR THE TRAFFIC CONTROL INTERCONNECTION PAY ITEM.

BY	DATE	REVISIONS

SYSTEM ID: 39447 T.E. 5652
METER ADDRESS:
MASTER ID: T.E.

FIELD WIRING DIAGRAM
REVISE SIGNAL SYSTEM
WILLIAMS DRIVE AT MORGAN AVENUE
IN BURNSVILLE, DAKOTA COUNTY

S.P. NO. 179-020-031, SP 019-605-028 | DRAWN BY: SJK | CKD BY: EJA | DATE: 05-09-12

CERTIFIED BY Michael P. Gubinsky LICENSED PROFESSIONAL ENGINEER LIC. NO. 19863 DATE: 06-12-12

STATE PROJ.NO. 1901-148 (T.H.13) SHEET NO. SS26 OF SS31 SHEETS

SIGNAL PHASING, PEDESTRIAN INDICATIONS, AND PUSH BUTTONS LAYOUT

PEDESTRIAN PUSH BUTTONS SHALL BE LOCATED AS SHOWN ABOVE.

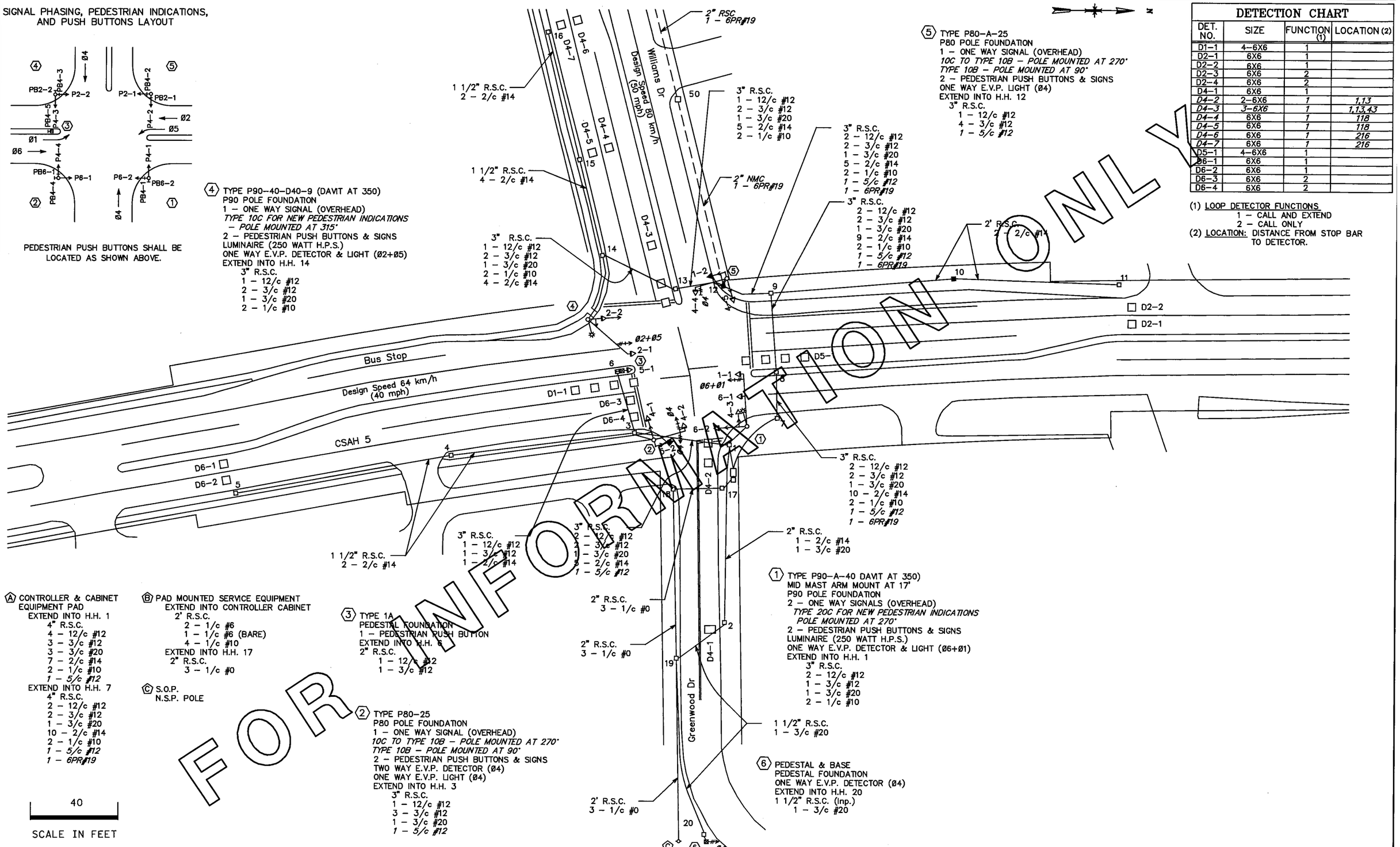
Williams Dr
Design Speed 80 km/h (50 mph)
Bus Stop
Design Speed 64 km/h (40 mph)
CSAH 5
Greenwood Dr
D1-1
D1-2
D2-1
D2-2
D4-1
D4-2
D4-3
D4-4
D4-5
D4-6
D4-7
D5-
D6-1
D6-2
D6-3
D6-4
Ø2+Ø5
Ø6+Ø1
Ø4
2" RSC
1 - 6PR#19
1 1/2" R.S.C.
2 - 2/c #14
1 1/2" R.S.C.
4 - 2/c #14
3" R.S.C.
1 - 12/c #12
2 - 3/c #12
1 - 3/c #20
5 - 2/c #14
2 - 1/c #10
2" NMC
1 - 6PR#19
3" R.S.C.
2 - 12/c #12
2 - 3/c #12
1 - 3/c #20
5 - 2/c #14
2 - 1/c #10
1 - 5/c #12
1 - 6PR#19
3" R.S.C.
2 - 12/c #12
2 - 3/c #12
1 - 3/c #20
9 - 2/c #14
2 - 1/c #10
1 - 5/c #12
1 - 6PR#19
2' R.S.C.
2 - 2/c #14
3" R.S.C.
2 - 12/c #12
2 - 3/c #12
1 - 3/c #20
10 - 2/c #14
2 - 1/c #10
1 - 5/c #12
1 - 6PR#19
2" R.S.C.
1 - 2/c #14
1 - 3/c #20
2" R.S.C.
3 - 1/c #0
2" R.S.C.
3 - 1/c #0
2' R.S.C.
3 - 1/c #0
1 1/2" R.S.C.
1 - 3/c #20
3" R.S.C.
1 - 12/c #12
2 - 3/c #12
1 - 3/c #20
2 - 1/c #10
4 - 2/c #14
3" R.S.C.
1 - 12/c #12
2 - 3/c #12
1 - 3/c #20
2 - 1/c #10
4 - 2/c #14
1 1/2" R.S.C.
2 - 2/c #14
3" R.S.C.
1 - 12/c #12
1 - 3/c #12
1 - 2/c #14
3" R.S.C.
2 - 12/c #12
2 - 3/c #12
1 - 3/c #20
5 - 2/c #14
1 - 5/c #12
1 - 2/c #14
1 - 3/c #12
2 - 1/c #10
1 - 5/c #12
1 - 6PR#19
1 - 3/c #20

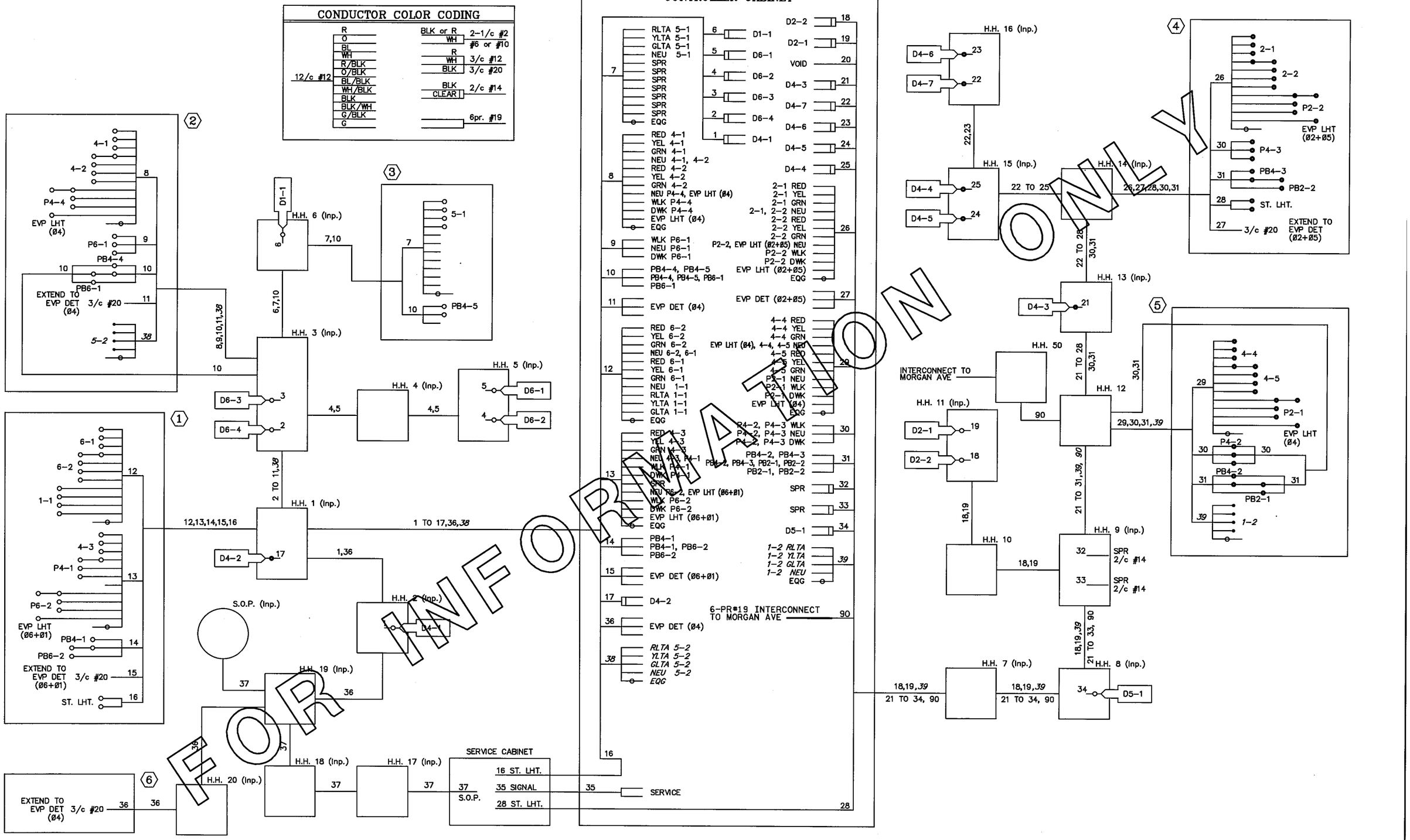

DISTRICT #: METRO
IPLOT NAME: INFORMATION WIRING DIAGRAM
PATH & FILENAME: IP_PWP-d1449724\T39429_sgl.dgn

PLOTTED/REVISED: 6/12/2012

BY	DATE	REVISIONS

SYSTEM ID: T.E.
METER ADDRESS:
MASTER ID: T.E.

FIELD WIRING DIAGRAM
FOR INFORMATION ONLY
TH 13 AT CSAH 5 (KENWOOD TRAIL) AT
WILLIAMS DRIVE/GREENWOOD DRIVE
IN BURNSVILLE, DAKOTA COUNTY

S.P. NO. 179-020-031, SP 019-605-028 | DRAWN BY: SJK | CKD BY: EJA | DATE: 05-09-12

STATE PROJ.NO. 1901-148 (T.H.13) SHEET NO. SS28 OF SS31 SHEETS

LOOP DETECTOR CHART

NUMBER	SIZE (FT)	LOCATION	TYPE
D1-1	4-6x6	20 & 35	SAW
D2-1, D2-2	6x6	420	PVC
D3-1	2-6x6	0 & 30	SAW
D4-1	2-6x6	130	SAW
D4-2	2-6x6	20	SAW
D5-1	2-6x6	5 & 20	PVC
D6-1, D6-2	6x6	440	SAW
D7-1	2-6x6	0 & 30	SAW
D8-1	2-6x6	120	SAW
D8-2	2-6x6	0	PVC

-ALL LOOP DETECTORS ARE NMC UNLESS NOTED OTHERWISE
-LOCATION: DISTANCE FROM CROSSWALK /STOP BAR IN FEET

SIGNAL FACE CHART

FACE	R	Y	G
1-1, 1-2, 1-3	◁—	◁—	◁—
2-1, 2-2	○	○	○
3-1, 3-2, 3-	◁—	◁—	◁—
4-1, 4-2, 4-3	○	○	○
5-1, 5-2, 5-3	◁—	◁—	◁—
6-1, 6-2	○	○	○
7-1, 7-2	◁—	◁—	◁—
8-1, 8-2, 8-3	○	○	○
E-6	BLUE LED ENFORCEMENT LIGHT		

-ALL SIGNAL INDICATIONS ARE 12"
-ALL SIGNAL INDICATIONS ARE LED
-ALL SIGNAL FACES HAVE A BACKGROUND SHIELD

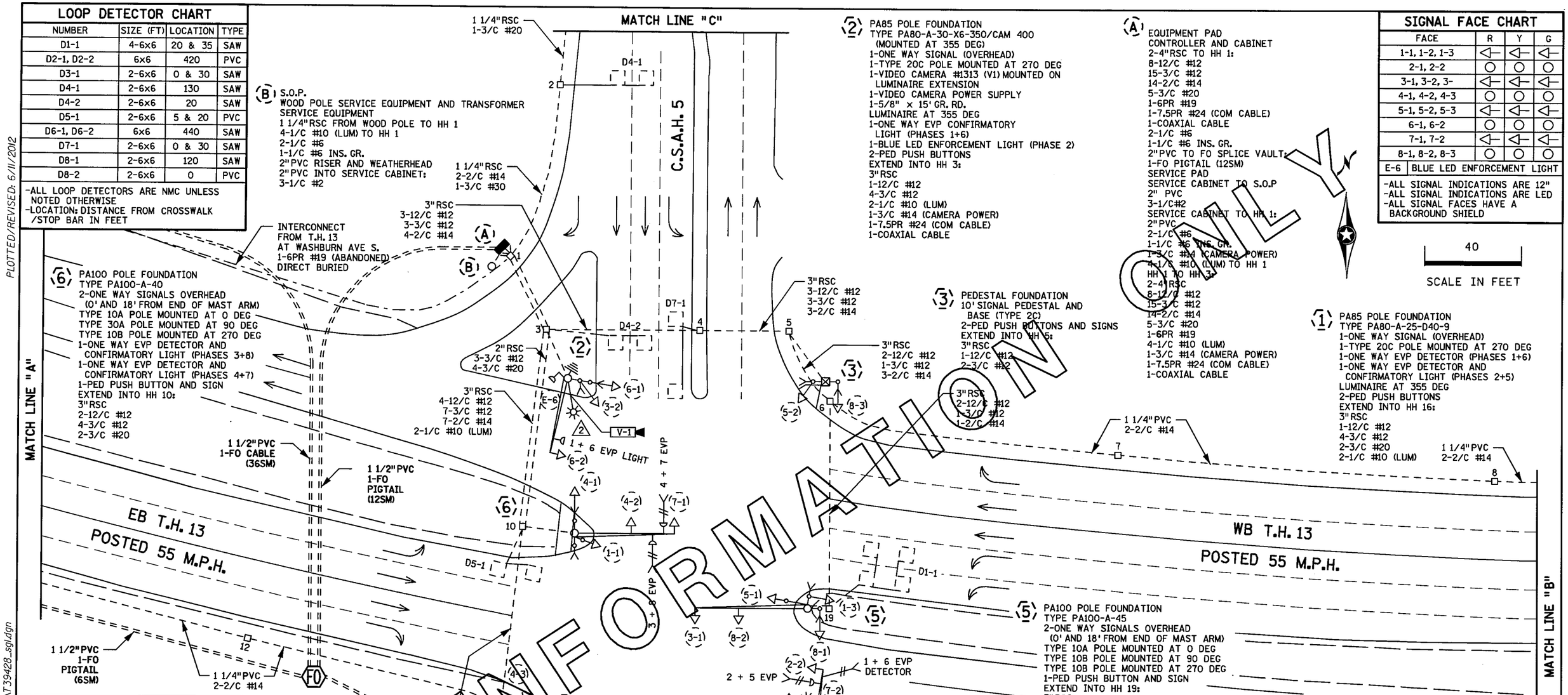

CONTROLLER PHASING, PEDESTRIAN INDICATIONS AND PUSH BUTTONS

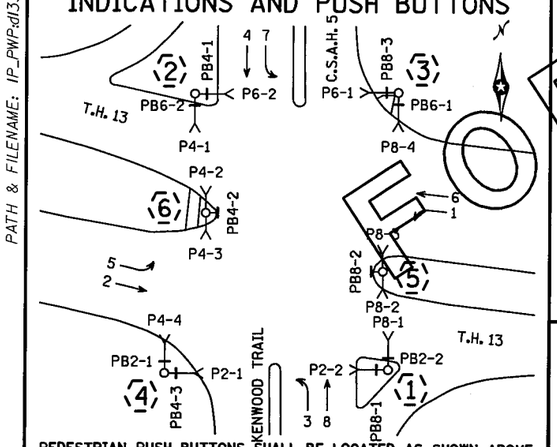

PEDESTRIAN PUSH BUTTONS SHALL BE LOCATED AS SHOWN ABOVE

SIGNAL SYSTEM OPERATION

- THE SIGNAL SYSTEM FLASH MODE IS ALL RED.
- NORMAL OPERATION IS 8 PHASE, WITH PHASE(S) 1,3,5,7 BEING A PROTECTED LEFT TURN PHASE(S).
- PHASES 2 AND 6 SHALL BE ON VEHICLE RECALL.

S.P. 179-020-031, S.P. 019-605-028

SYSTEM ID: 20292

METER ADDRESS: 1830 HIGHWAY 13 WEST

"FOR INFORMATION ONLY"
INTERSECTION LAYOUT
T.H. 13 AT C.S.A.H. 5 (KENWOOD TRAIL)
IN BURNSVILLE, DAKOTA COUNTY

STATE PROJ.NO. 1901-148 (T.H.13) SHEET NO. SS29 OF SS31 SHEETS

FOR INFORMATION ONLY

PLOTTED/REVISED: 6/11/2012
DISTRICT *: METRO
IPLOT NAME: layout B info only
PATH & FILENAME: IP_PWP:dl338009\739428_sgl.dgn

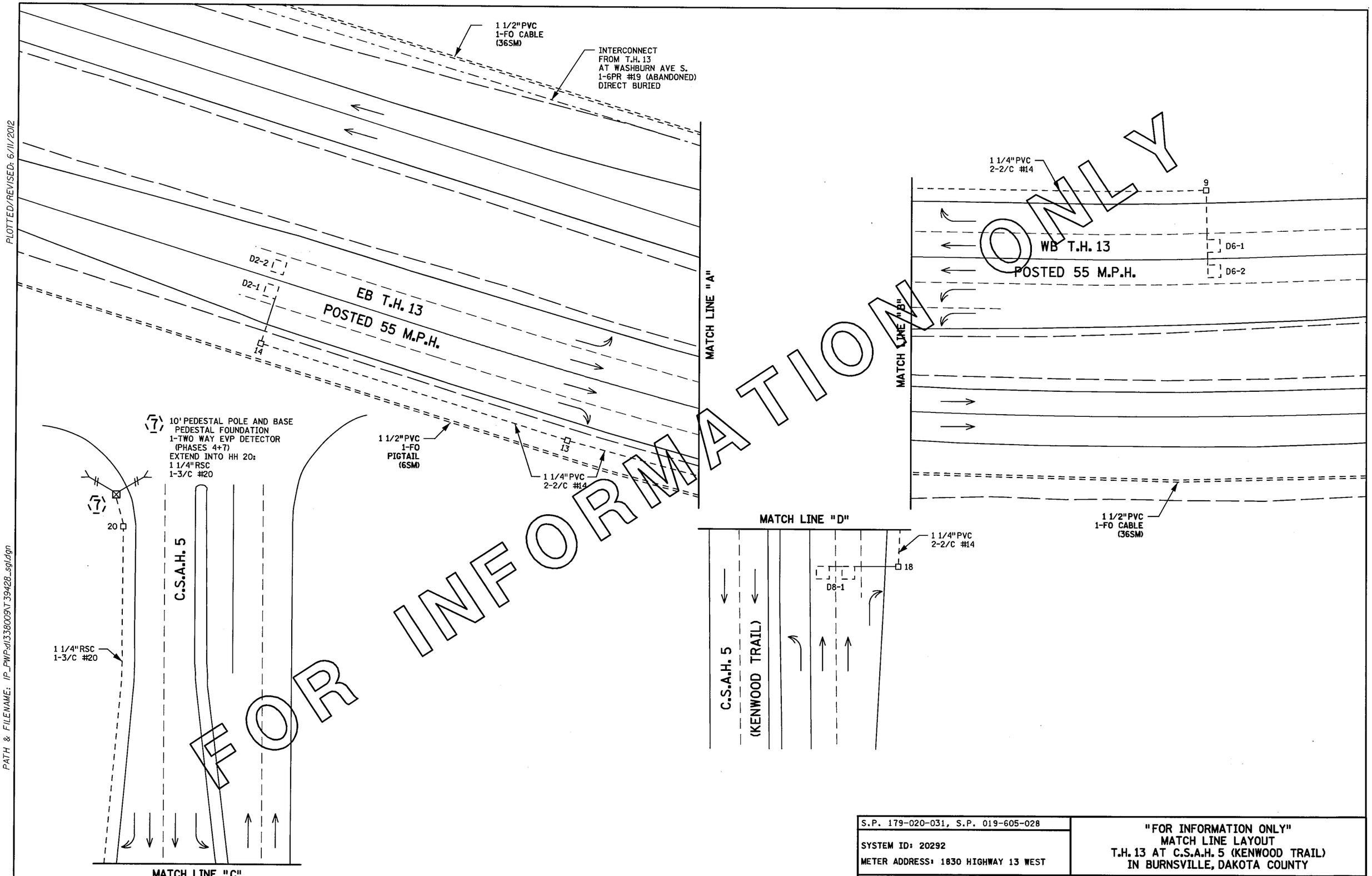

PLOTTED/REVISED: 6/11/2012

DISTRICT *: METRO
IPLOT NAME: match lines B Info only
PATH & FILENAME: IP_PWP-d1338009\T39428_sgl.dgn

S.P. 179-020-031, S.P. 019-605-028	"FOR INFORMATION ONLY" MATCH LINE LAYOUT T.H. 13 AT C.S.A.H. 5 (KENWOOD TRAIL) IN BURNSVILLE, DAKOTA COUNTY
SYSTEM ID: 20292 METER ADDRESS: 1830 HIGHWAY 13 WEST	
STATE PROJ.NO. 1901-148 (T.H.13)	SHEET NO. SS30 OF SS31 SHEETS

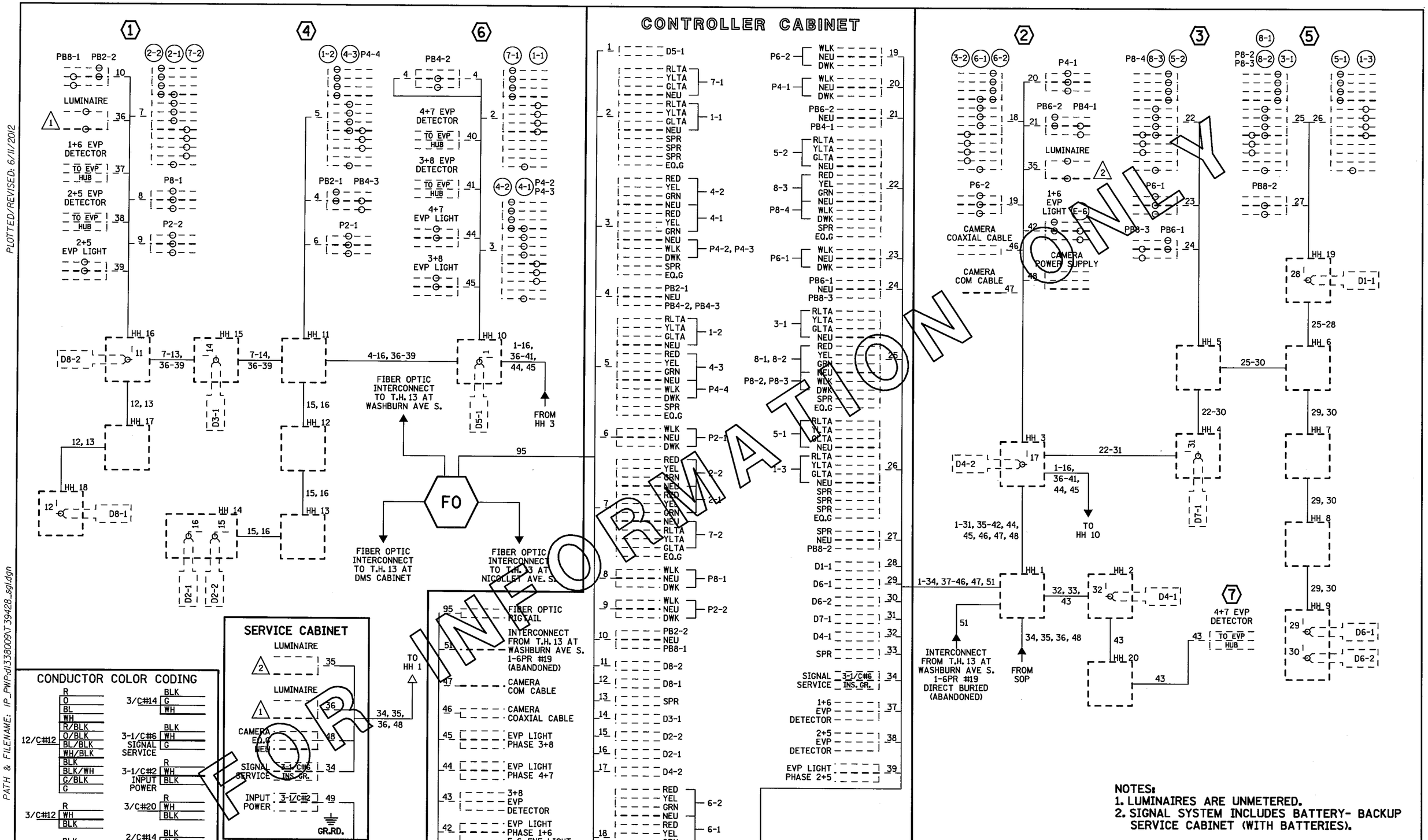

NOTES:
1. LUMINAIRES ARE UNMETERED.
2. SIGNAL SYSTEM INCLUDES BATTERY- BACKUP SERVICE CABINET (WITH BATTERIES).

S.P. 179-020-031, S.P. 019-605-028

SYSTEM ID: 20292

METER ADDRESS: 1830 HIGHWAY 13 WEST

"FOR INFORMATION ONLY"
FIELD WIRING DIAGRAM
T.H. 13 AT C.S.A.H. 5 (KENWOOD TRAIL)
IN BURNSVILLE, DAKOTA COUNTY

STATE PROJ.NO. 1901-148 (T.H.13) SHEET NO. SS31 OF SS31 SHEETS

PLOTTED/REVISED: 6/11/2012

DISTRICT *: METRO
IPLOT NAME: wiring B info only
PATH & FILENAME: IP_PWP-d1338009T39428_sgl.dgn

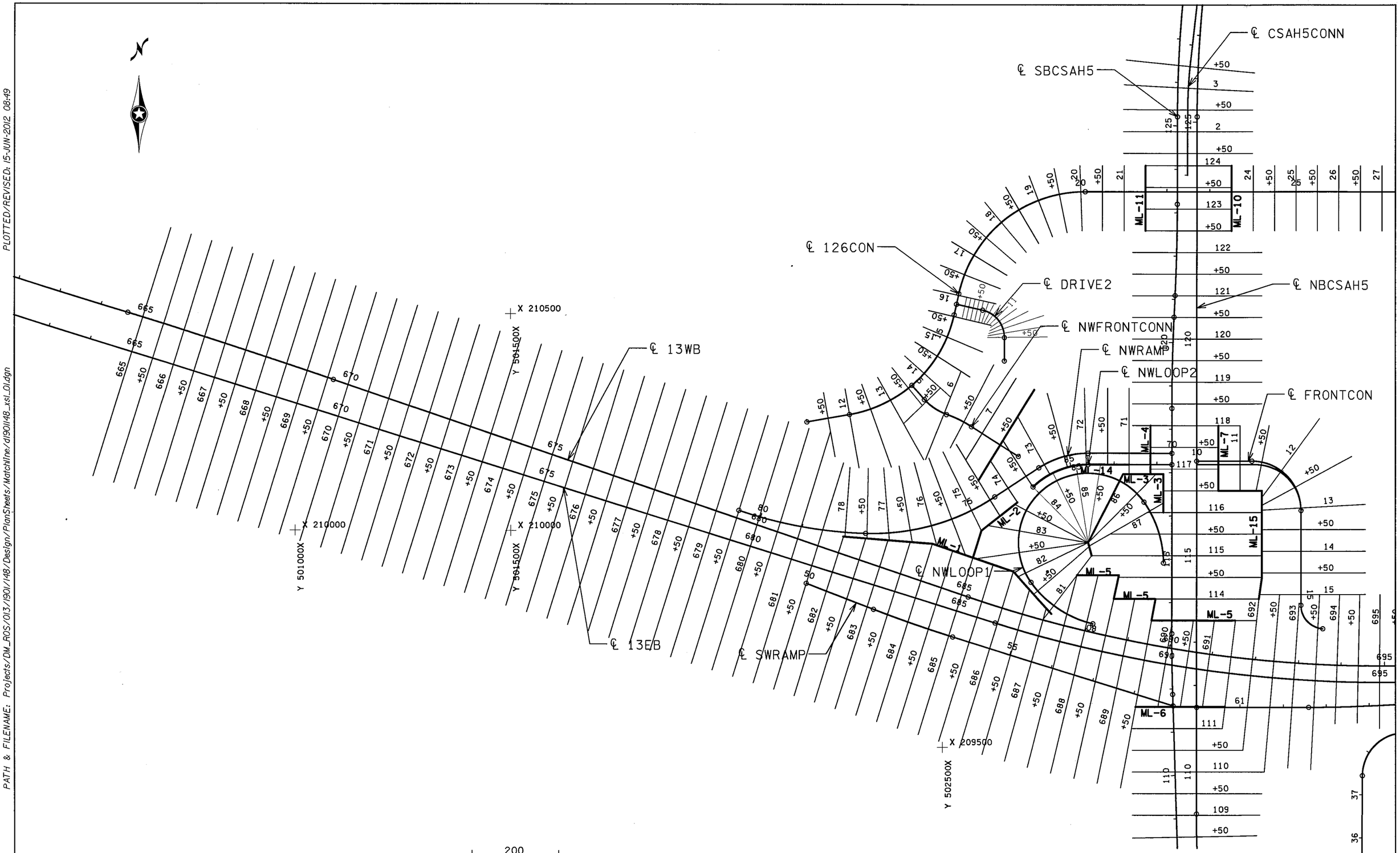

200

SCALE IN FEET

S.P. 179-020-031 S.P. 019-605-028

SHEET 1 OF 4

CROSS SECTION MATCH LINE LAYOUT

DRAWN BY: GLJ	CHECKED BY: HS	CERTIFIED BY _____ LICENSED PROFESSIONAL ENGINEER	LIC. NO. 18520 DATE 6/18/12	STATE PROJ. NO. 1901-148 (T.H. 13)	SHEET NO. X1 OF X137 SHEETS

PLOTTED/REVISED: 15-JUN-2012 08:49

DISTRICT #: METRO
IPLOT NAME: d1901148_xsl_01
PATH & FILENAME: Projects/DM_ROS/013/1901/148/Design/PlanSheets/MatchLine/d1901148_xsl_01.dgn

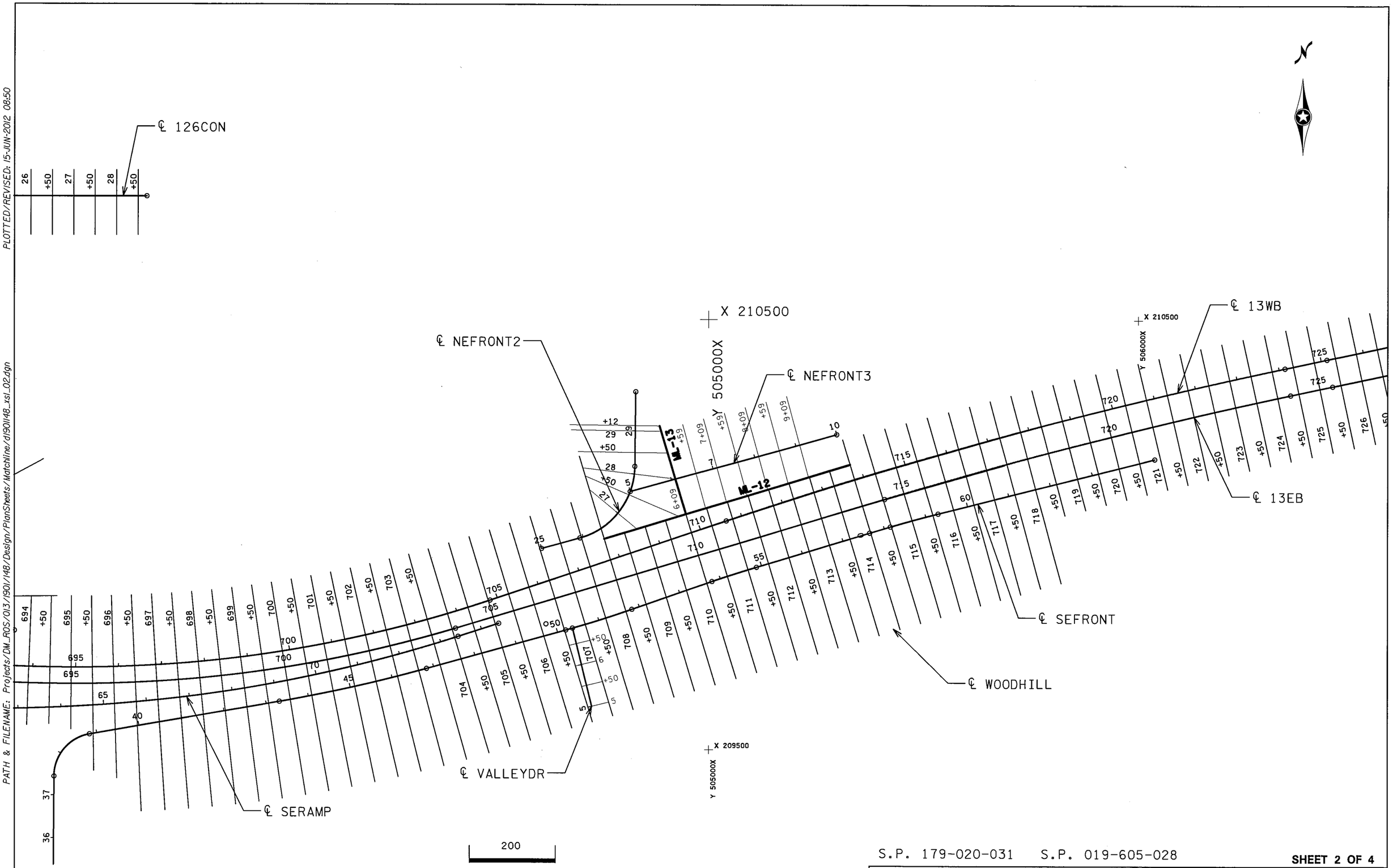

S.P. 179-020-031 S.P. 019-605-028

SHEET 2 OF 4

CROSS SECTION MATCH LINE LAYOUT

DRAWN BY: GLJ	CHECKED BY: HS	CERTIFIED BY _____ LICENSED PROFESSIONAL ENGINEER	LIC. NO. 18520 DATE 6/18/12	STATE PROJ. NO. 1901-148 (T.H. 13) SHEET NO. X2 OF X137 SHEETS

DISTRICT #: METRO
IPLOT NAME: d190l148_xsl_02
PATH & FILENAME: Projects/DM_ROS/013/190l/148/Design/PlanSheets/MatchLine/d190l148_xsl_02.dgn
PLOTTED/REVISED: 15-JUN-2012 08:50

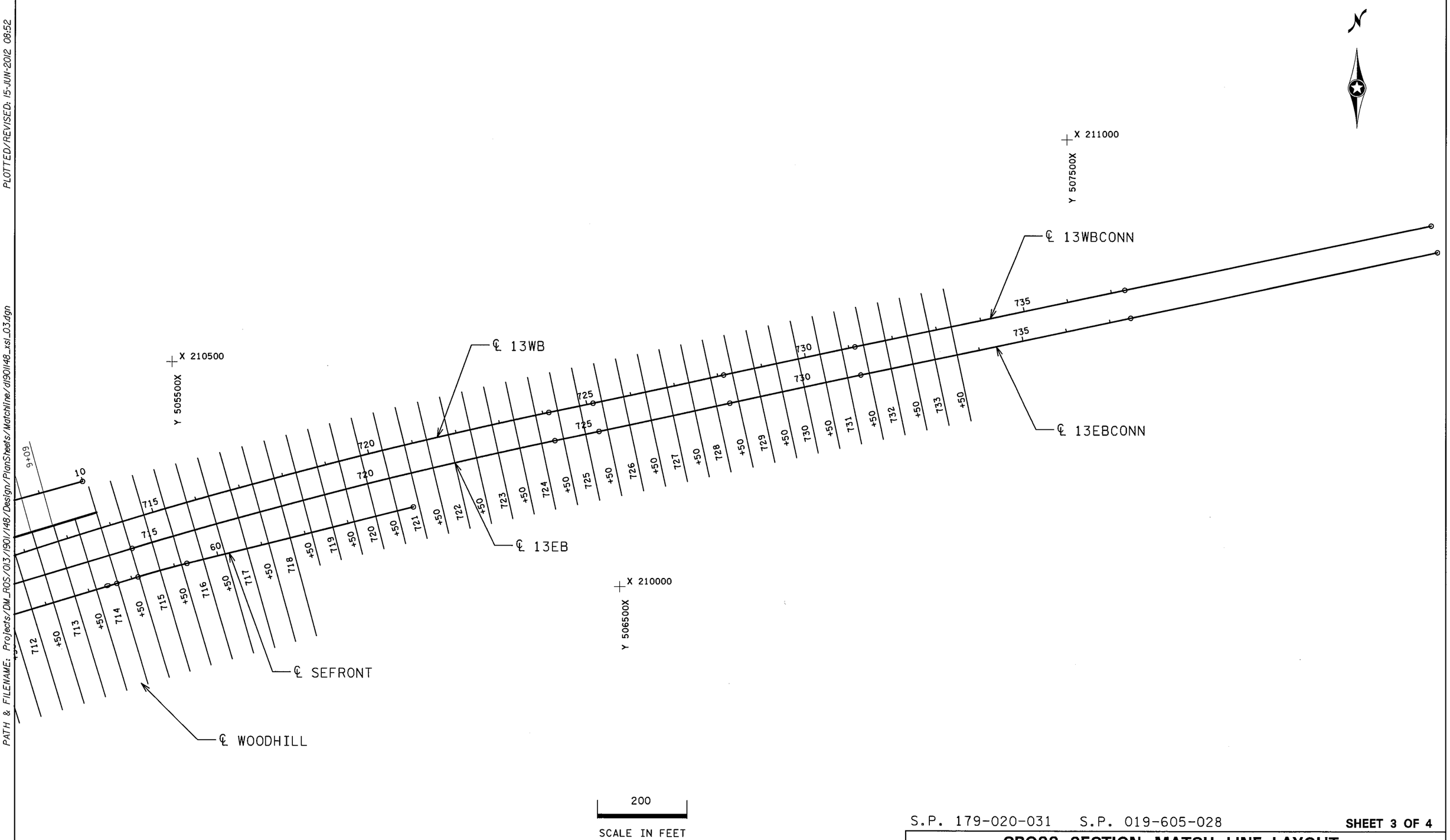

PLOTTED/REVISED: 15-JUN-2012 08:52

DISTRICT #: METRO
IPLOT NAME: d1901148_xsl_03
PATH & FILENAME: Projects/DM_ROS/013/1901/148/Design/PlanSheets/Matchline/d1901148_xsl_03.dgn

S.P. 179-020-031 S.P. 019-605-028

SHEET 3 OF 4

CROSS SECTION MATCH LINE LAYOUT

DRAWN BY: GLJ	CHECKED BY: HS	CERTIFIED BY LICENSED PROFESSIONAL ENGINEER	LIC. NO. 18520 DATE 6/18/12	STATE PROJ. NO. 1901-148 (T.H. 13)	SHEET NO. X3 OF X137 SHEETS

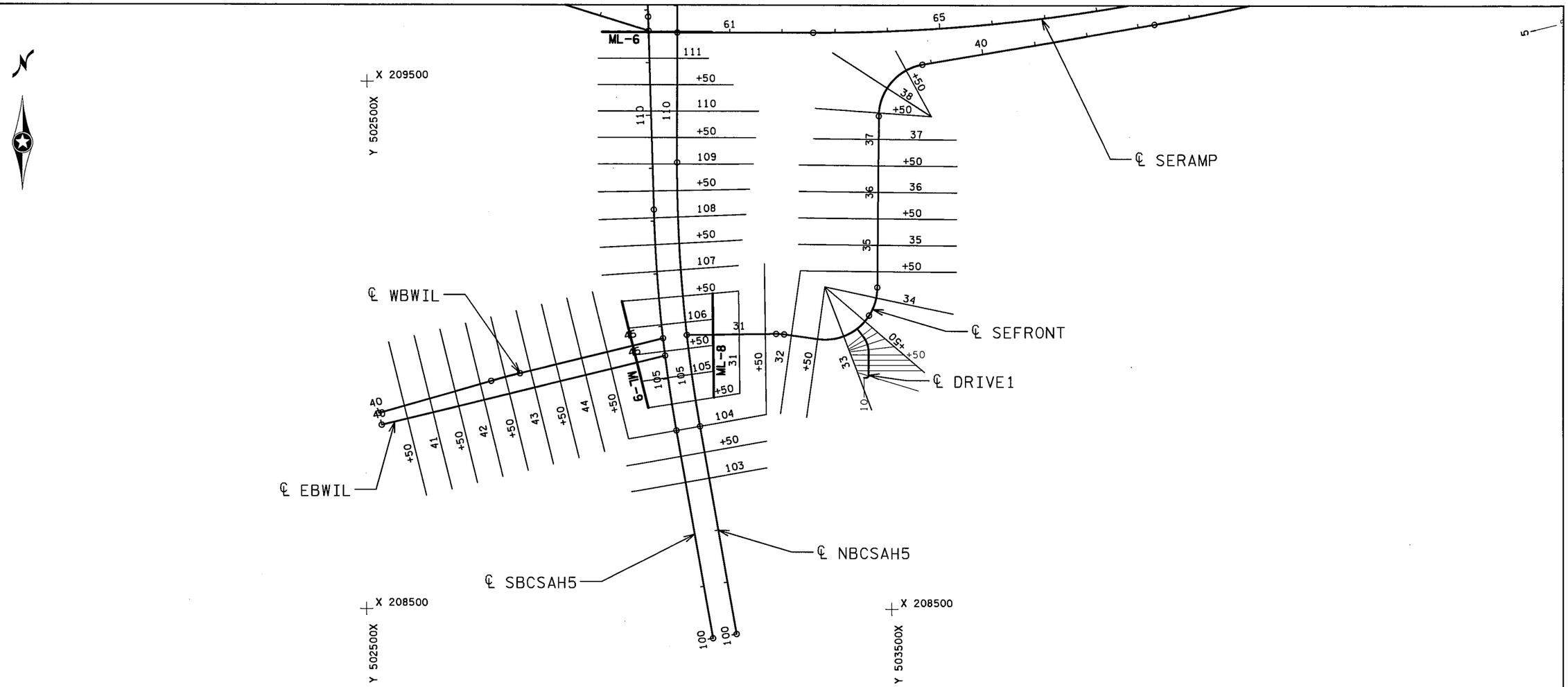

200

SCALE IN FEET

S.P. 179-020-031 S.P. 019-605-028

SHEET 4 OF 4

CROSS SECTION MATCH LINE LAYOUT

DRAWN BY: GLJ	CHECKED BY: HS	CERTIFIED BY LICENSED PROFESSIONAL ENGINEER LIC. NO. 18520 DATE 6/18/12	STATE PROJ. NO. 1901-148 (T.H. 13) SHEET NO. X4 OF X137 SHEETS

DISTRICT #: METRO
IPLOT NAME: d1901148_xsl_04
PATH & FILENAME: Projects/DM_ROS/013/1901/148/Design/PlanSheets/Matchline/d1901148_xsl_04.dgn
PLOTTED/REVISED: 15-JUN-2012 08:54

CROSS SECTION SHEET INDEX

T.H. 13 W.B.	STA. 665+00 TO STA. 669+50	SHEET NO. X6 TO X8
T.H. 13 E.B.	STA. 670+00 TO STA. 733+00	SHEET NO. X9 TO X63
NWLOOP1	STA. 81+00 TO STA. 87+00	SHEET NO. X64 TO X68
NWRAMP	STA. 70+50 TO STA. 78+00	SHEET NO. X69 TO X76
CSAH5	STA. 103+00 TO STA. 124+00	SHEET NO. X77 TO X90
CSAH5CONN	STA. 1+50 TO STA. 3+50	SHEET NO. X91 TO X92
126TH ST.	STA. 11+50 TO STA. 28+50	SHEET NO. X93 TO X106
NWFRONT CONN	STA. 5+50 TO STA. 7+50	SHEET NO. X107 TO X108
FRONTCON	STA. 10+50 TO STA. 15+00	SHEET NO. X109 TO X112
NEFRONT2	STA. 27+00 TO STA. 29+04	SHEET NO. X113 TO X114
NEFRONT3	STA. 5+59 TO STA. 9+09	SHEET NO. X115 TO X117
SEFRONT	STA. 30+50 TO STA. 38+00	SHEET NO. X118 TO X123
WILLIAMS DR	STA. 40+50 TO STA. 45+00	SHEET NO. X124 TO X127
DRIVE1	STA. 10+10 TO STA. 10+90	SHEET NO. X128 TO X130
DRIVE2	STA. 10+30 TO STA. 11+40	SHEET NO. X131 TO X135
VALLEY DR	STA. 5+00 TO STA. 6+50	SHEET NO. X136 TO X137

S.P. 179-020-031 S.P. 019-605-028

CROSS SECTION SHEET INDEX

DRAWN BY: GJ | CHECKED BY: HS | CERTIFIED BY _____ LICENSED PROFESSIONAL ENGINEER LIC. NO. 18250 DATE 6/18/12

STATE PROJ. NO. 1901-148 (T.H. 13) SHEET NO. X5 OF X137 SHEETS

PLOTTED/REVISED: 15-JUN-2012 08:55
DISTRICT #: METRO
IPLOT NAME: d1901148_xs_Index
PATH & FILENAME: Projects/DM_ROS/013/1901/148/Design/d1901148_xs_Index.dgn

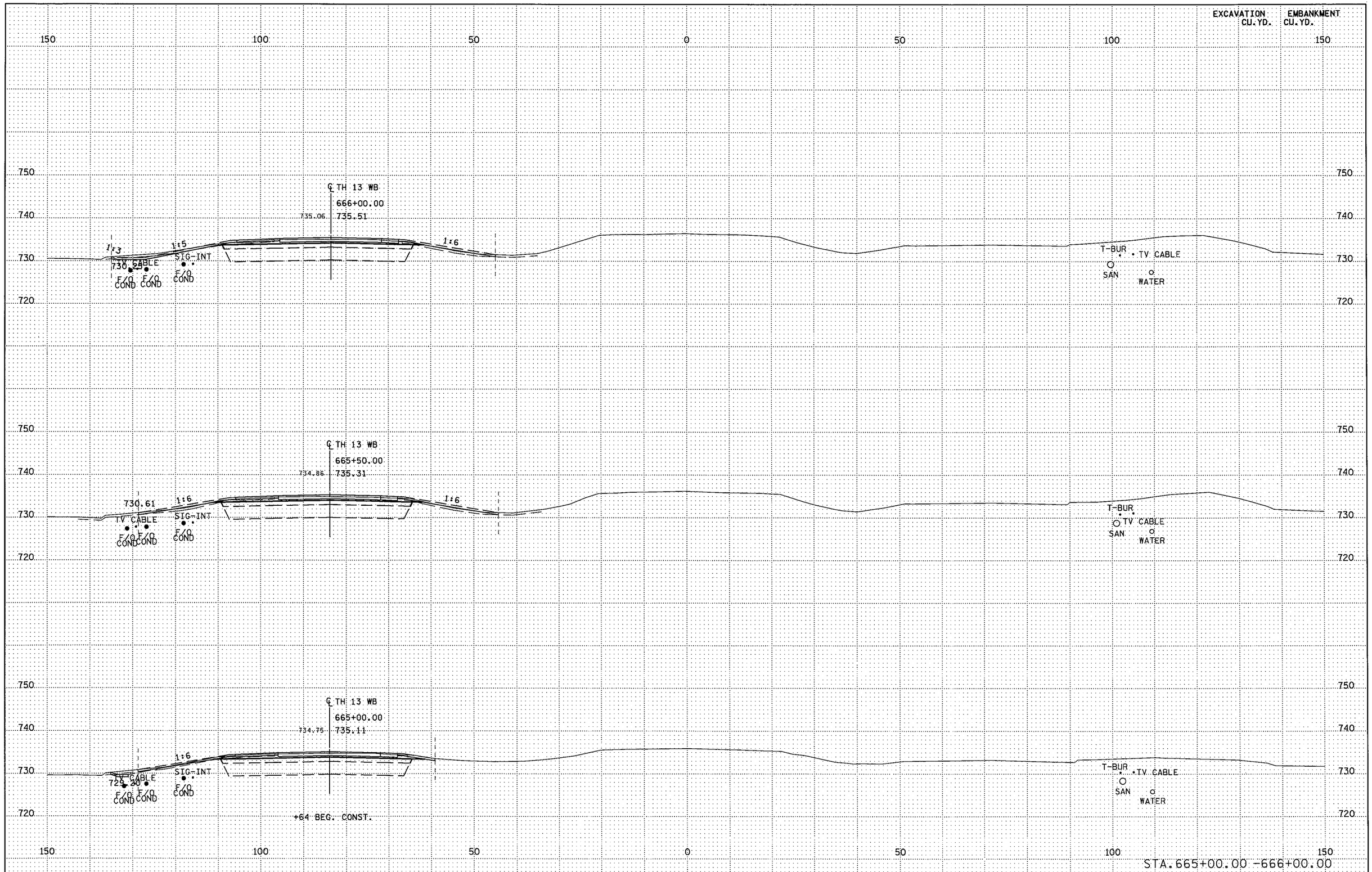

S.P. 179-020-031 S.P. 019-605-028 | STATE PROJ. NO. 1901-148 (TH 13) SHEET NO. X6 OF X137 SHEETS

DISTRICT *: METRO
IPLOT NAME: d190l148_th13_xpl
PATH & FILENAME: Projects/DM_ROS/013/1901/148/Design/XS/d190l148_th13_xpl.dgn
PLOTTED/REVISED: 11-JUN-2012 06:51

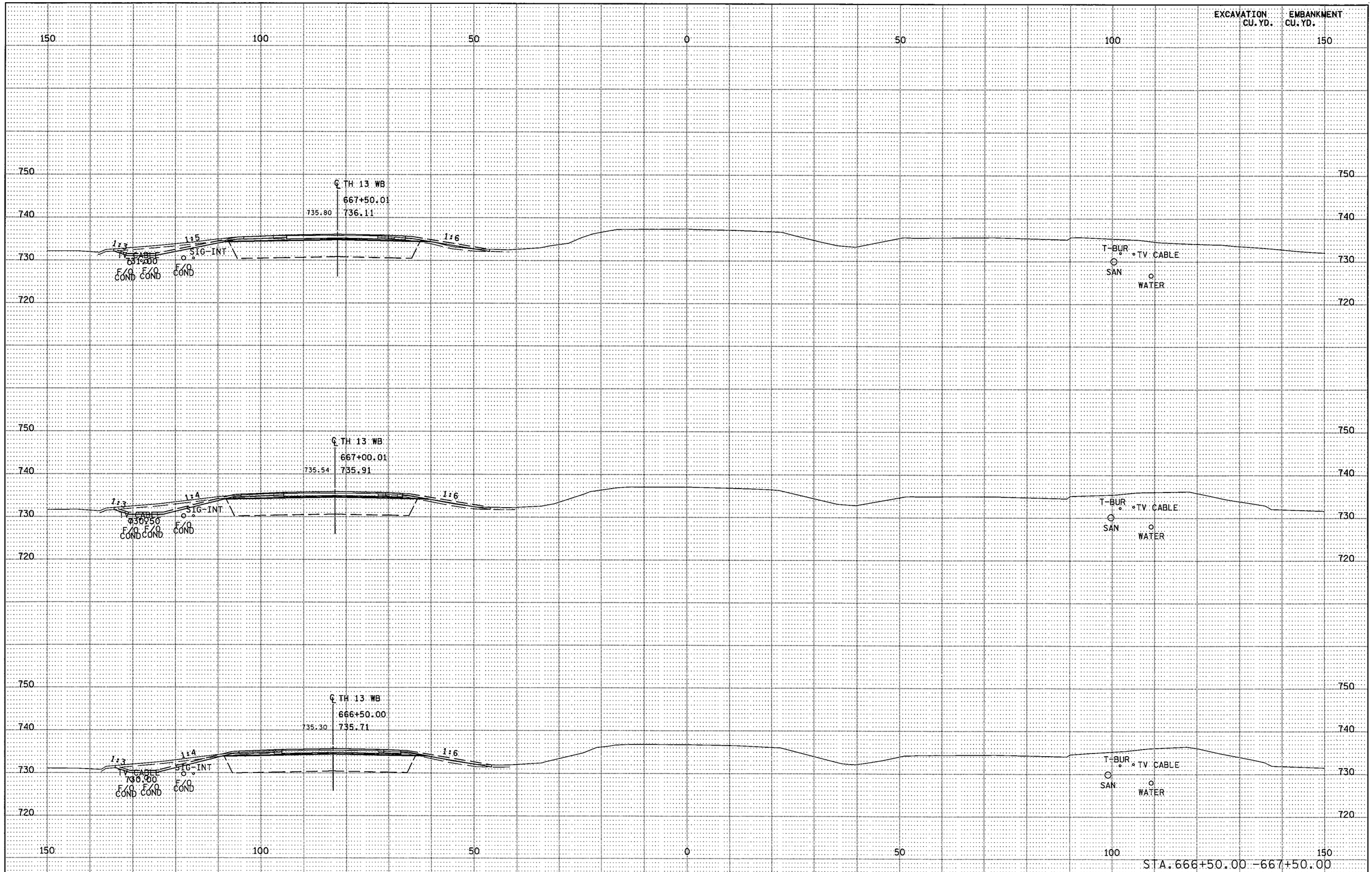

PLOTTED/REVISED: 14-JUN-2012 08:55

DISTRICT #: METRO
IPLOT NAME: d1901148_th13_xpl
PATH & FILENAME: Projects/DM_ROS/013/1901/148/Design/XS/d1901148_th13_xpl.dgn

S.P. 179-020-031 S.P. 019-605-028 | STATE PROJ. NO. 1901-148 (TH 13) SHEET NO. X7 OF X137 SHEETS

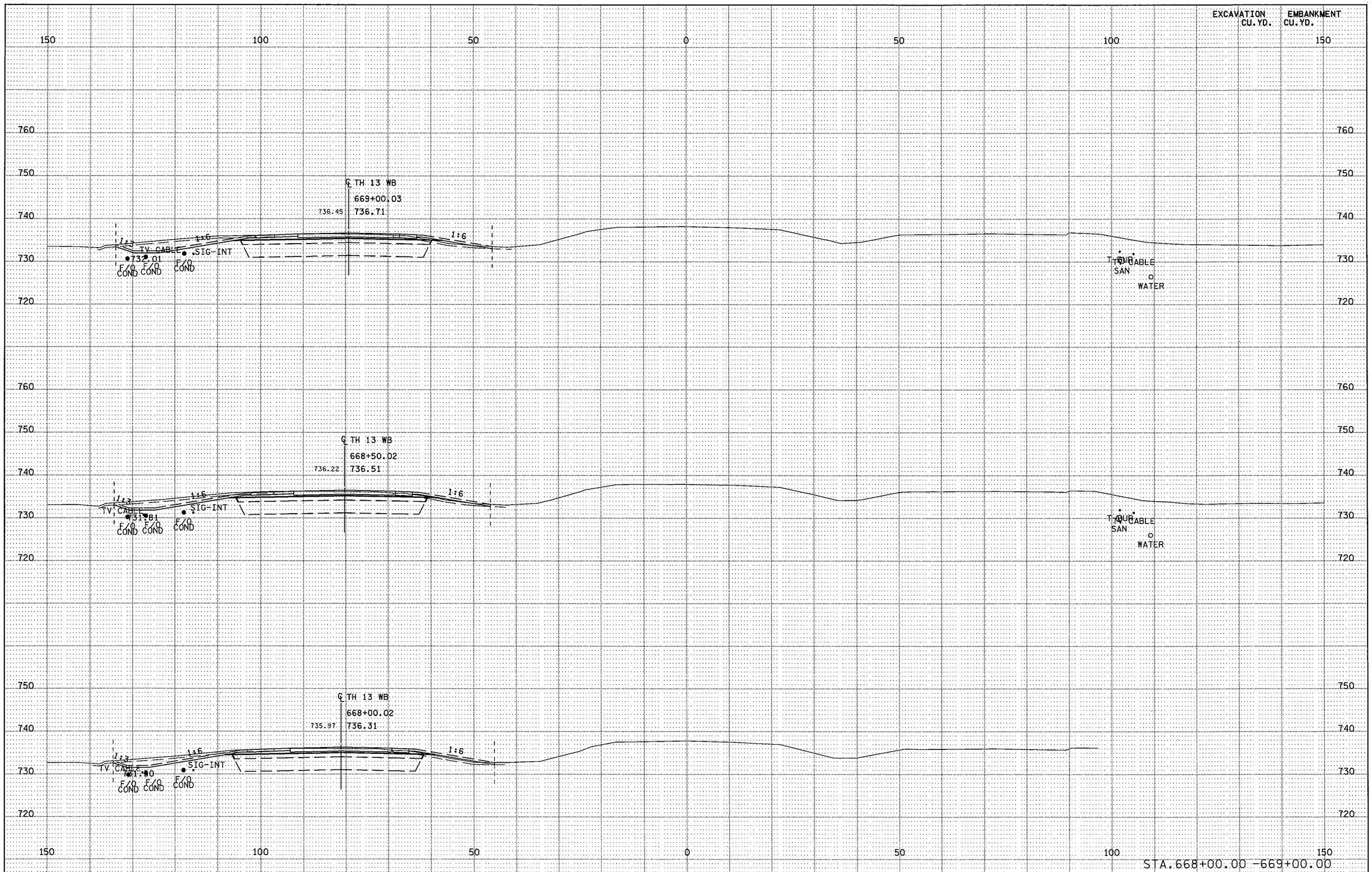

S.P. 179-020-031 S.P. 019-605-028 | STATE PROJ. NO. 1901-148 (TH 13) SHEET NO. X8 OF X137 SHEETS

DISTRICT * : METRO
IPLOT NAME: d190l148_th13_xpll
PATH & FILENAME: Projects/DM_ROS/013/1901/148/Design/XS/d190l148_th13_xpl.dgn
PLOTTED/REVISED: 11-JUN-2012 06:51

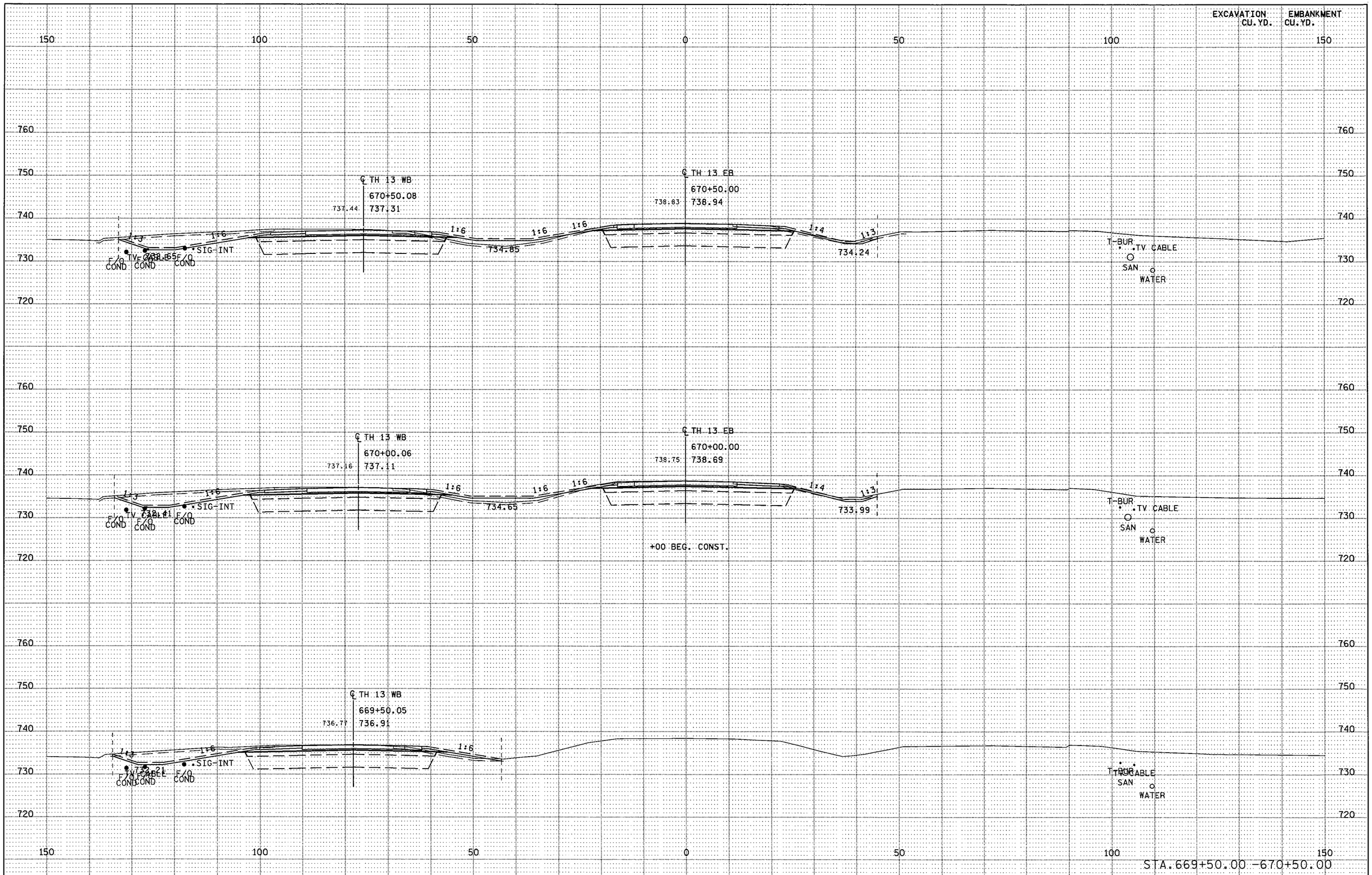

S.P. 179-020-031 S.P. 019-605-028 | STATE PROJ. NO. 1901-148 (TH 13) SHEET NO. X9 OF X137 SHEETS

PLOTTED/REVISED: 11-JUN-2012 06:51

DISTRICT *: METRO
IPLOT NAME: d1901148_th13_xpl2
PATH & FILENAME: Projects/DM_ROS/013/1901/148/Design/XS/d1901148_th13_xpl.dgn

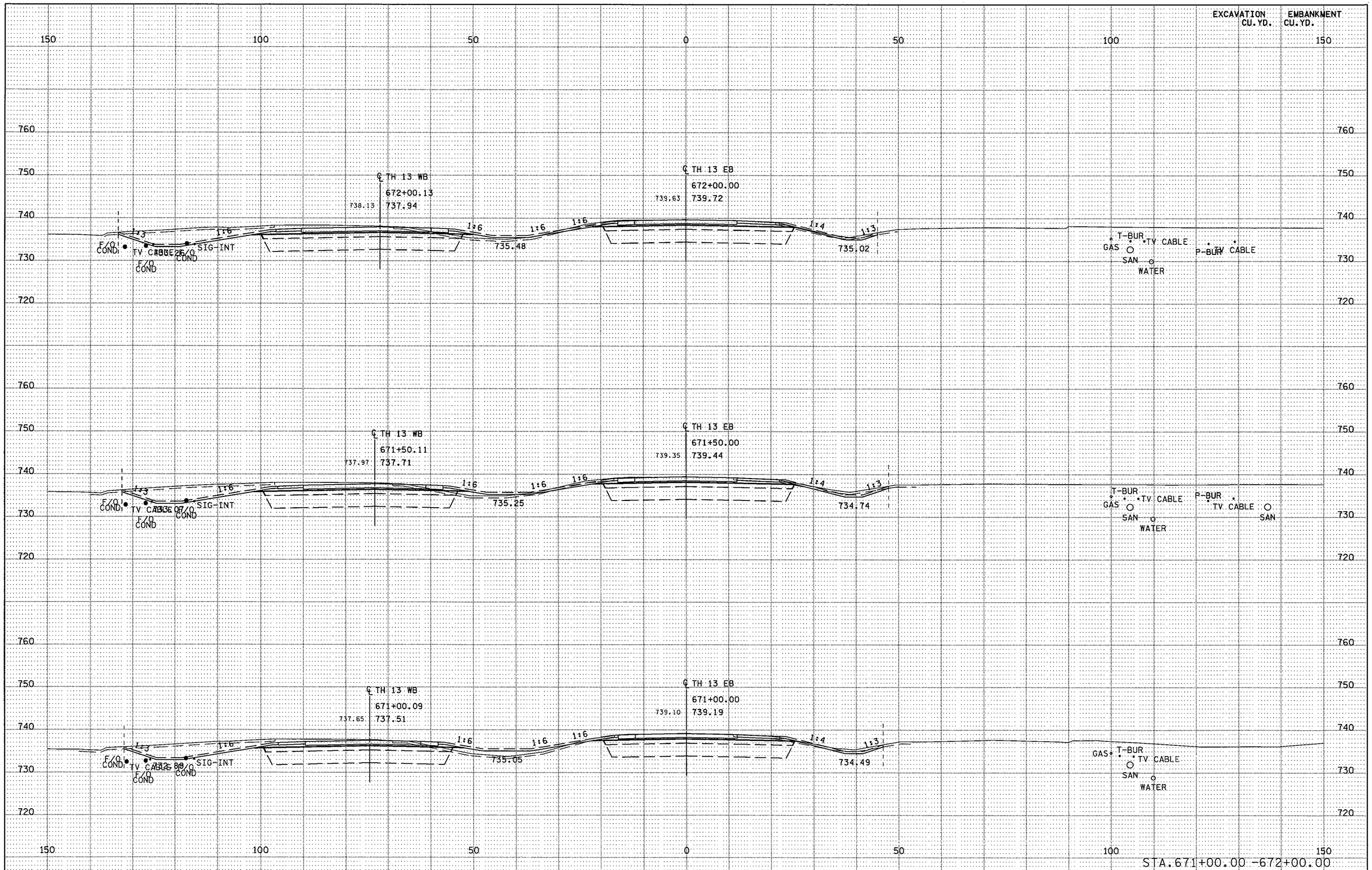

S.P. 179-020-031 S.P. 019-605-028 | STATE PROJ. NO. 1901-148 (TH 13) SHEET NO. X10 OF X137 SHEETS

PLOTTED/REVISED: 11-JUN-2012 06:51

DISTRICT *: METRO
IPLOT NAME: d190l148_th13_xpl3
PATH & FILENAME: P:\Projects\DM_ROS\013\190\148\Design\XS\d190l148_th13_xpl.dgn

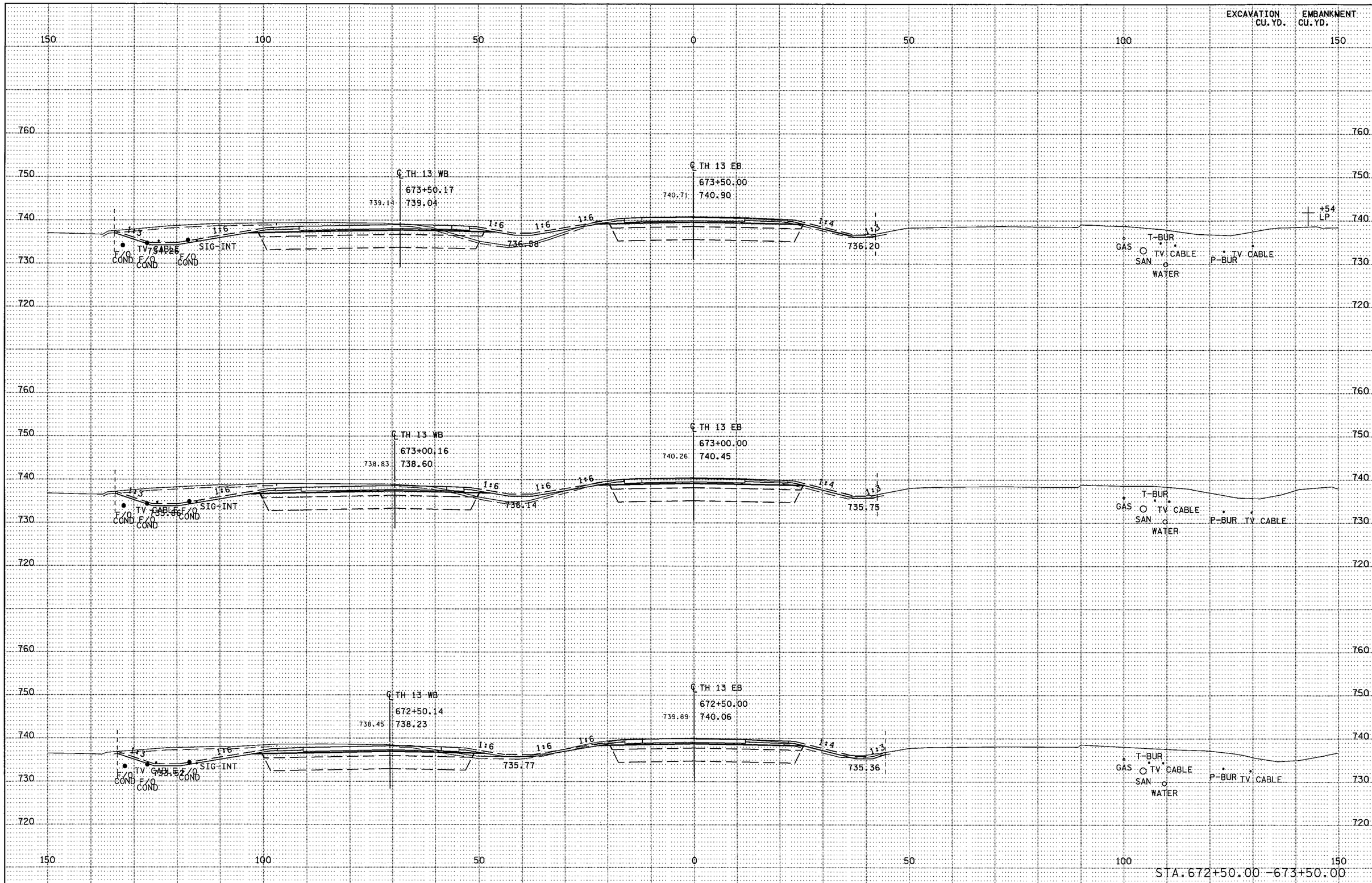

S.P. 179-020-031 S.P. 019-605-028 | STATE PROJ. NO. 1901-148 (TH 13) SHEET NO. X11 OF X137 SHEETS

DISTRICT *: METRO
IPLOT NAME: d1901148_th13_xpl4
PATH & FILENAME: Projects/DM_ROS/013/1901/148/Design/XS/d1901148_th13_xpl.dgn
PLOTTED/REVISED: 11-JUN-2012 06:51

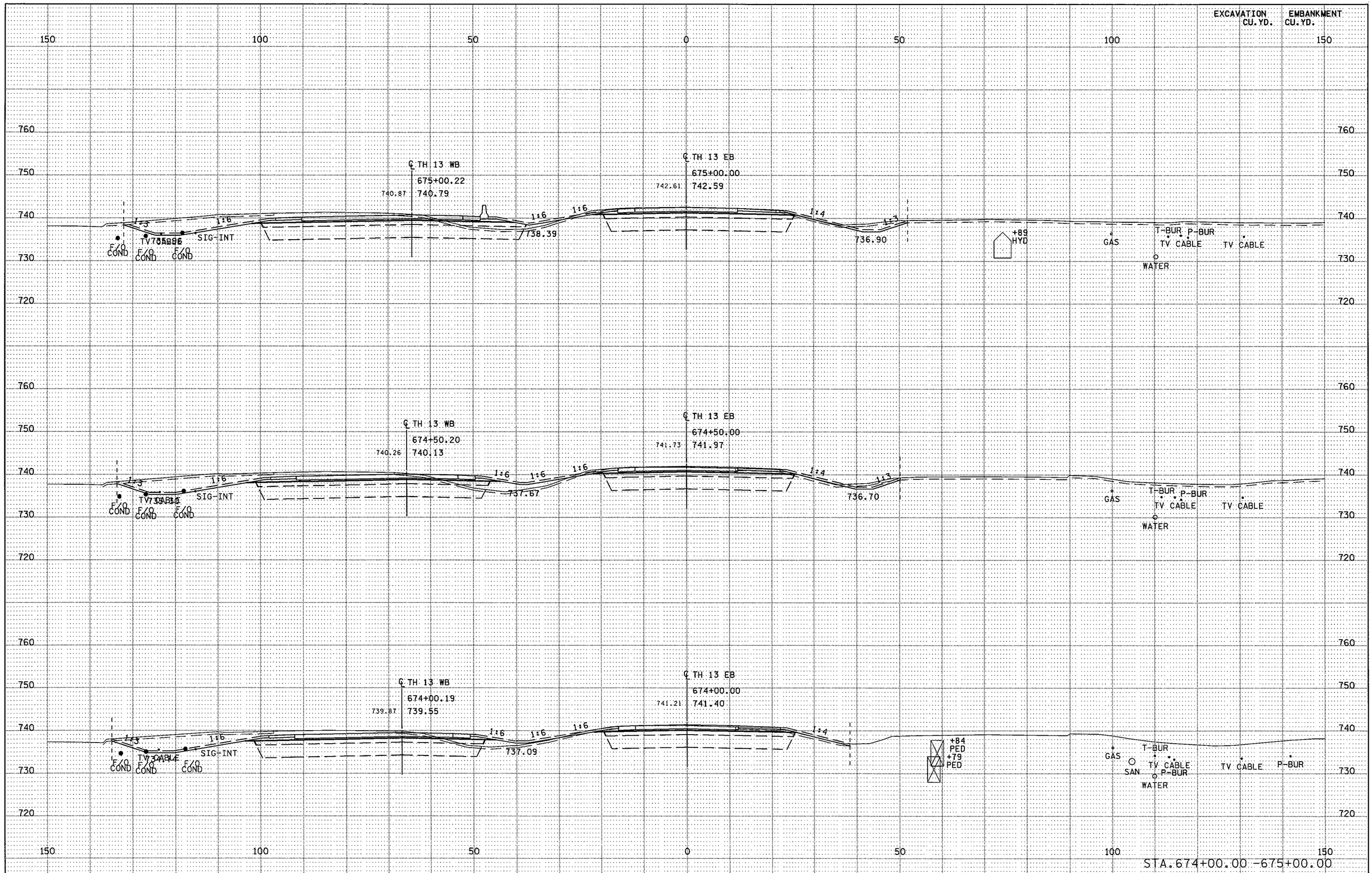

S.P. 179-020-031 S.P. 019-605-028 | STATE PROJ. NO. 1901-148 (TH 13) SHEET NO. X12 OF X137 SHEETS

DISTRICT * : METRO
IPLOT NAME: d190l148_th13_xpl5
PATH & FILENAME: Projects/DM_ROS/013/190l/148/Design/XS/d190l148_th13_xpl.dgn
PLOTTED/REVISED: 11-JUN-2012 06:51

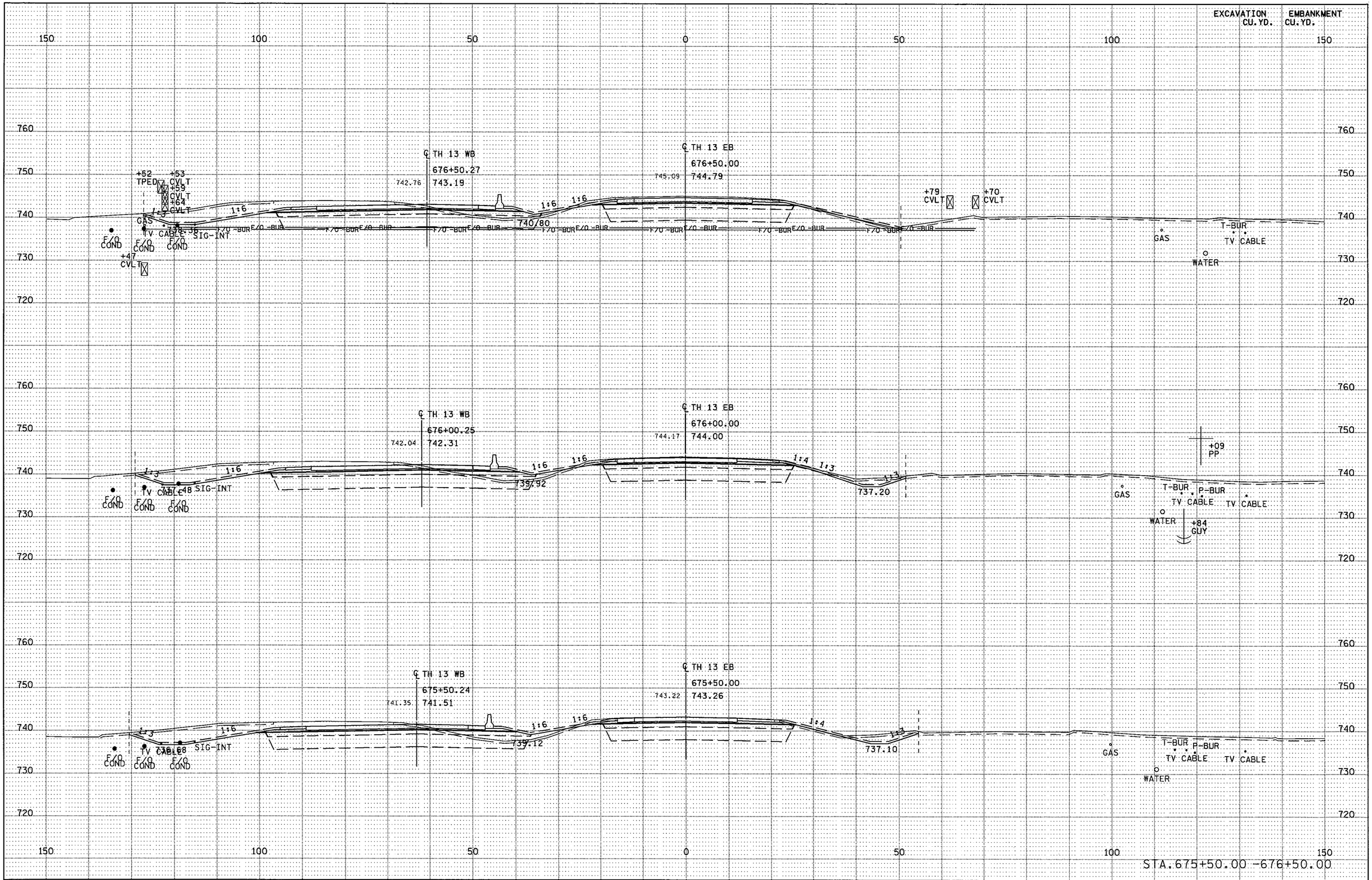

S.P. 179-020-031 S.P. 019-605-028 | STATE PROJ. NO. 1901-148 (TH 13) SHEET NO. X13 OF X137 SHEETS

PLOTTED/REVISED: 11-JUN-2012 06:52

DISTRICT *: METRO
IPLOT NAME: d190i148_th13_xpl6
PATH & FILENAME: Projects/DM_ROS/013/1901148/Design/XS/d190i148_th13_xpl.dgn

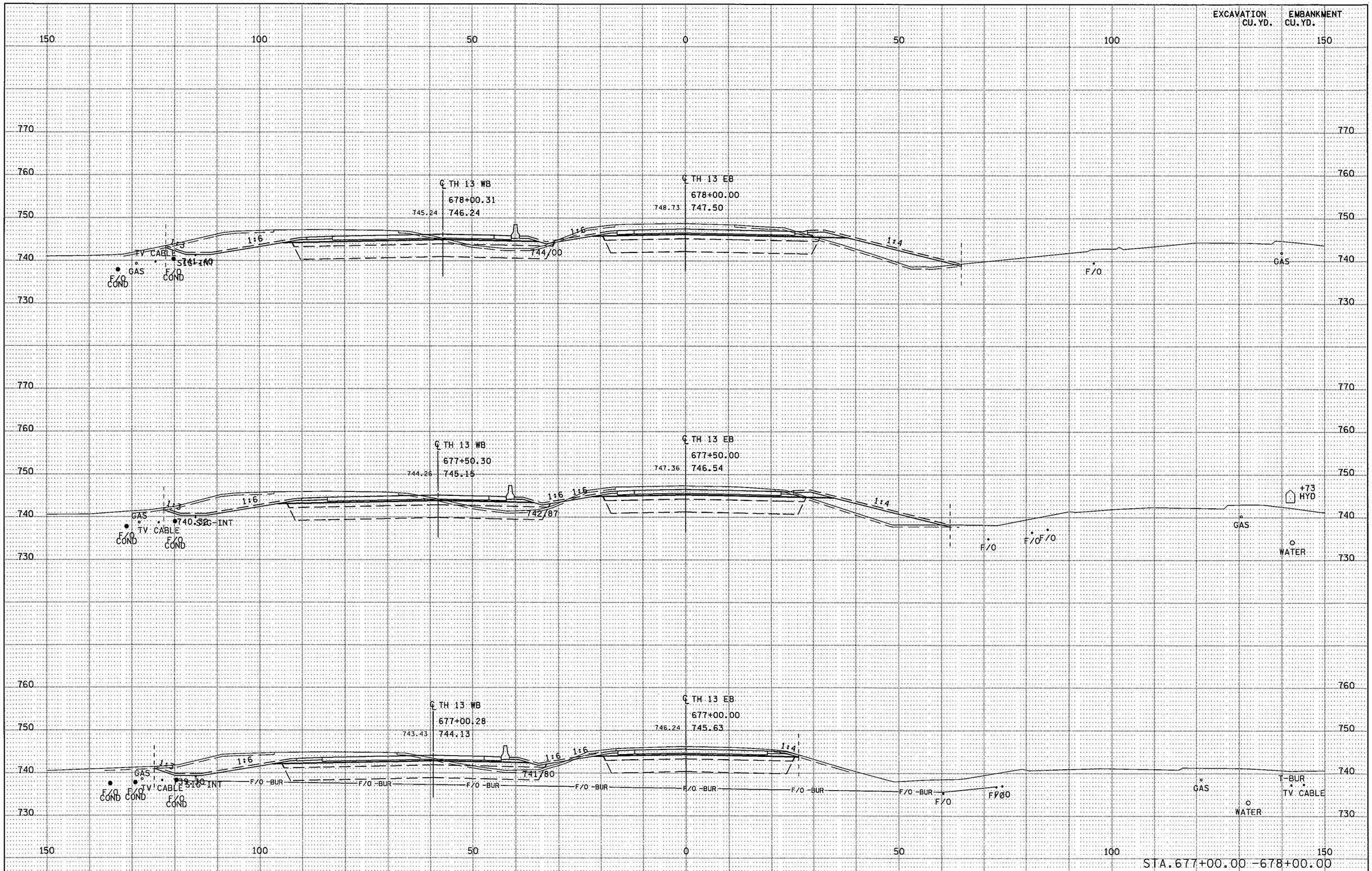

PLOTTED/REVISED: 11-JUN-2012 06:52

DISTRICT *: METRO
IPLOT NAME: d1901148_th13_xpl7
PATH & FILENAME: Projects/DM_ROS/013/1901/148/Design/XS/d1901148_th13_xpl.dgn

S.P. 179-020-031 S.P. 019-605-028 | STATE PROJ. NO. 1901-148 (TH 13) SHEET NO. X14 OF X137 SHEETS

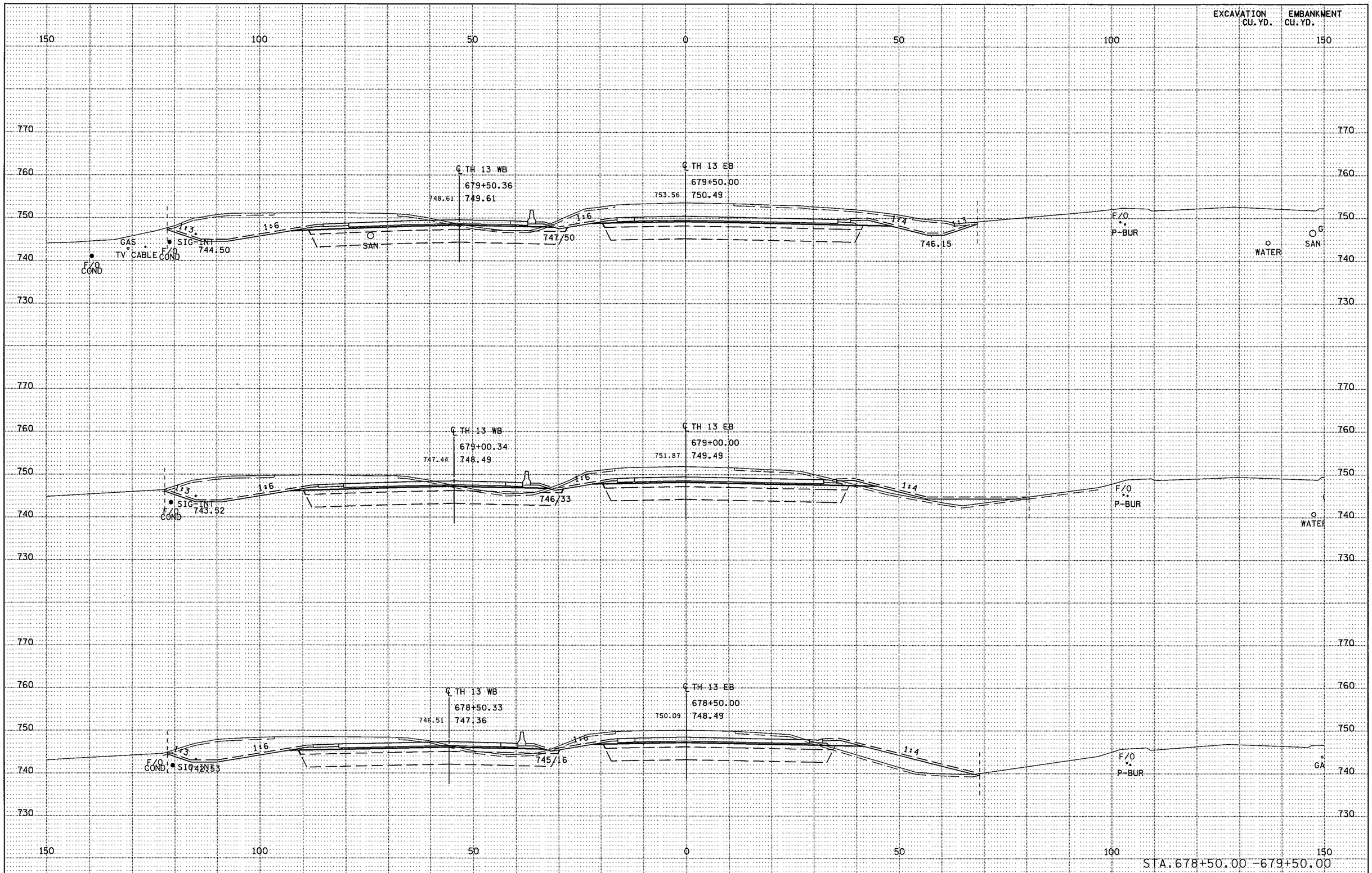

PLOTTED/REVISED: 11-JUN-2012 06:52

DISTRICT #: METRO
IPLOT NAME: d1901148_th13_xpl8
PATH & FILENAME: Projects/DM_ROS/013/1901/148/Design/XS/d1901148_th13_xpl.dgn

S.P. 179-020-031 S.P. 019-605-028 | STATE PROJ. NO. 1901-148 (TH 13) SHEET NO. X15 OF X137 SHEETS

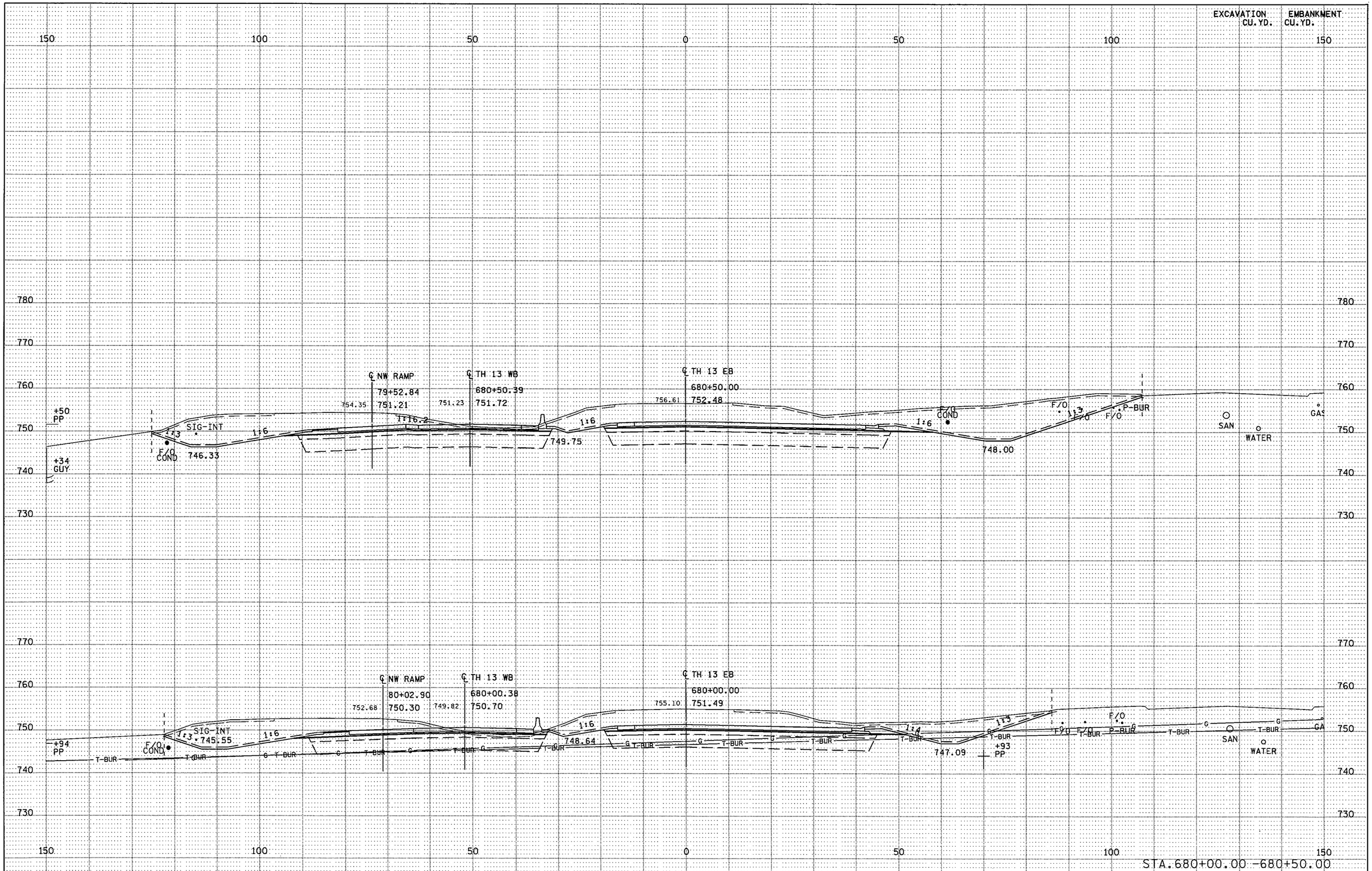

S.P. 179-020-031 S.P. 019-605-028

STATE PROJ. NO. 1901-148 (TH 13) SHEET NO. X16 OF X137 SHEETS

DISTRICT # : METRO
IPLOT NAME: d1901148_th13_xpl9
PATH & FILENAME: Projects/DM_ROS/013/1901/148/Design/XS/d1901148_th13_xpl.dgn
PLOTTED/REVISED: 11-JUN-2012 06:52

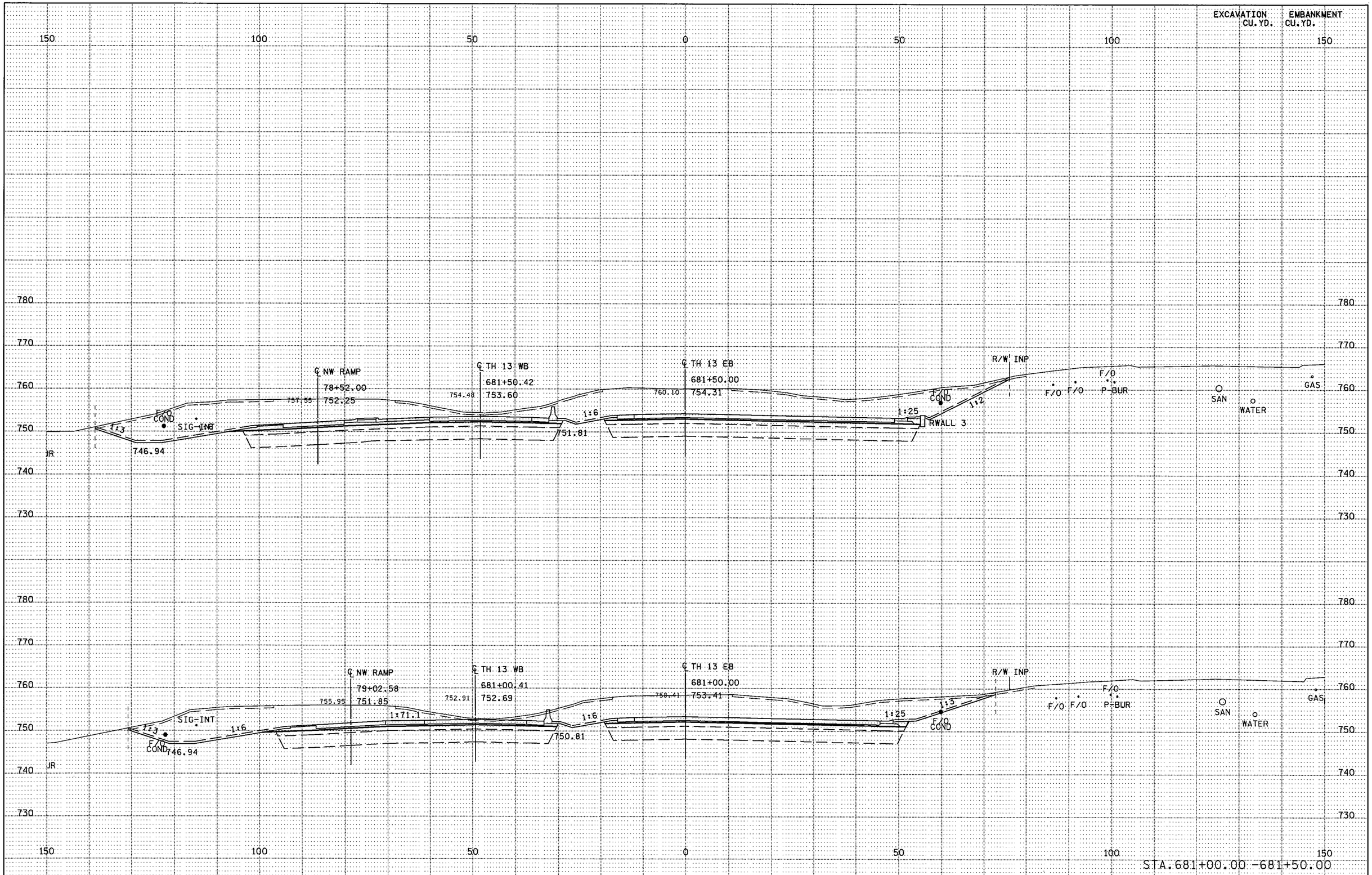

S.P. 179-020-031 S.P. 019-605-028 | STATE PROJ. NO. 1901-148 (TH 13) SHEET NO. X17 OF X137 SHEETS

DISTRICT * : METRO
IPLOT NAME: d1901148_th13_xpl10
PATH & FILENAME: Projects/DM_ROS/013/1901/148/Design/XS/d1901148_th13_xpl.dgn
PLOTTED/REVISED: 11-JUN-2012 06:52

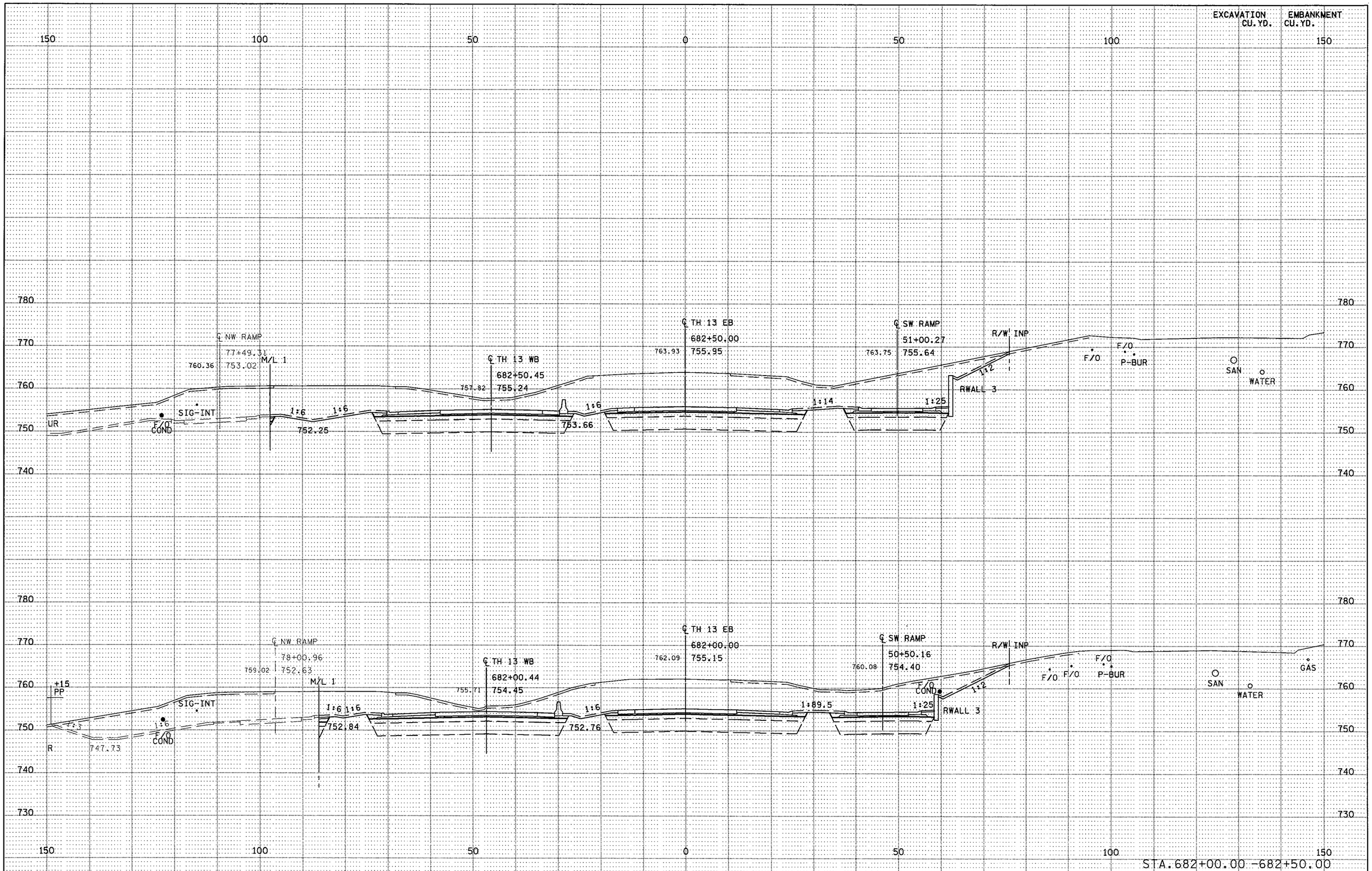

S.P. 179-020-031 S.P. 019-605-028 | STATE PROJ. NO. 1901-148 (TH 13) SHEET NO. X18 OF X137 SHEETS

DISTRICT * : METRO
IPLOT NAME: d1901148_th13_xpl11
PATH & FILENAME: Projects/DM_ROS/013/1901/148/Design/XS/d1901148_th13_xpl.dgn
PLOTTED/REVISED: 11-JUN-2012 06:57

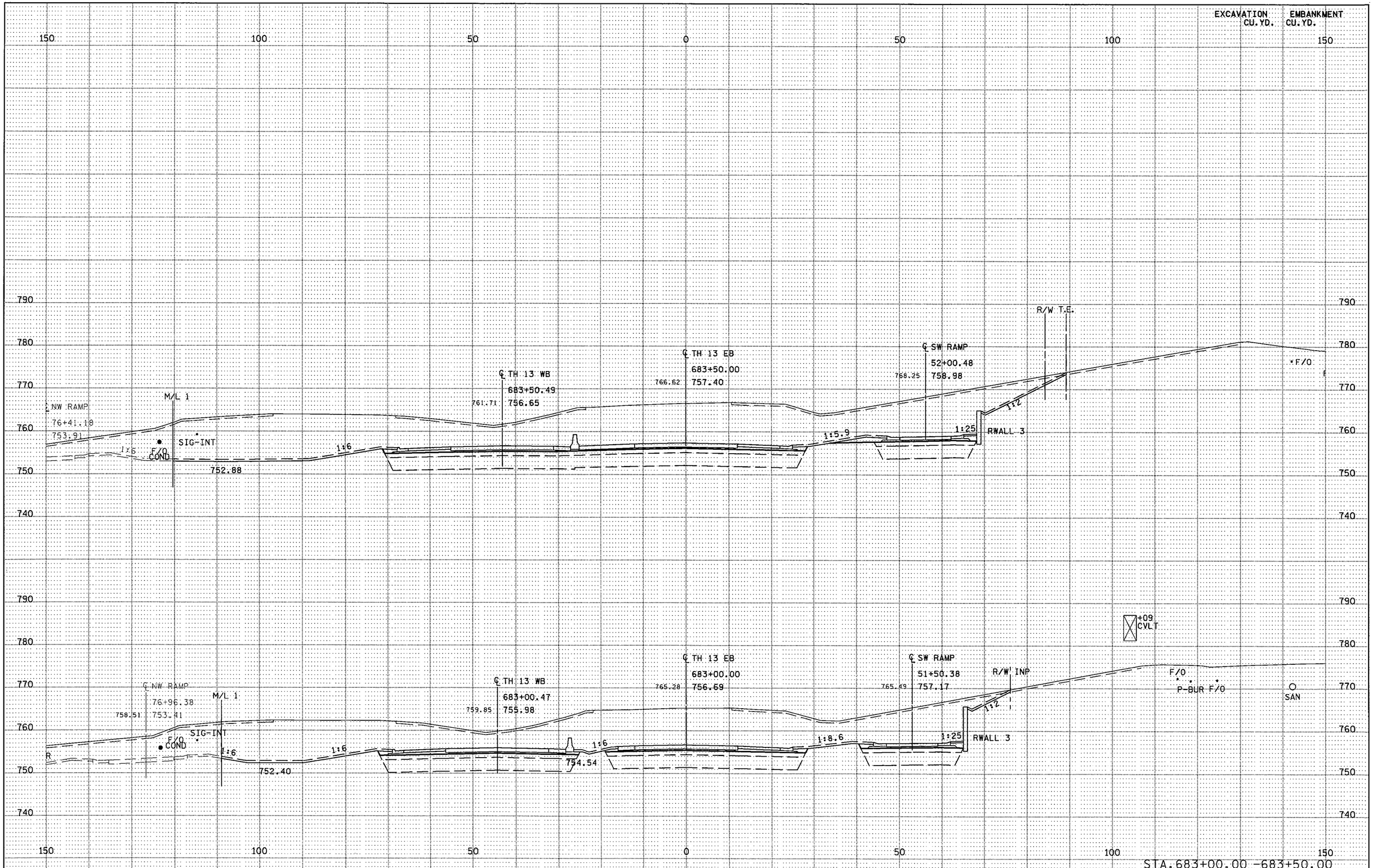

S.P. 179-020-031 S.P. 019-605-028 | STATE PROJ. NO. 1901-148 (TH 13) SHEET NO. X19 OF X137 SHEETS

PLOTTED/REVISED: 11-JUN-2012 06:57

DISTRICT # : METRO
IPLOT NAME: d9011148_th13_xpl12
PATH & FILENAME: Projects/DM_ROS/013/1901/148/Design/XS/d9011148_th13_xpl.dgn

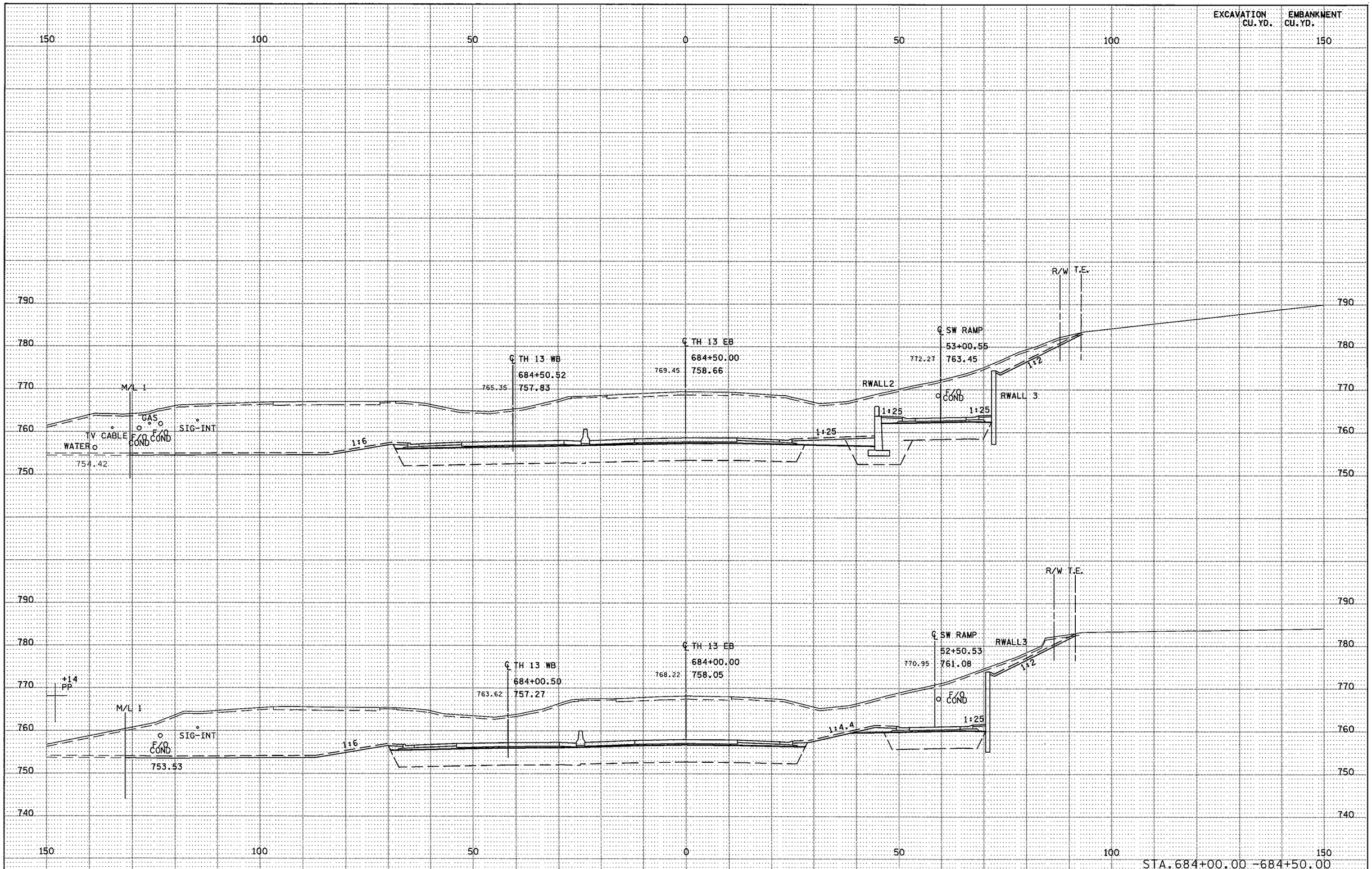

S.P. 179-020-031 S.P. 019-605-028

STATE PROJ. NO. 1901-148 (TH 13) SHEET NO. X20 OF X137 SHEETS

PLOTTED/REVISED: 14-JUN-2012 09:03

DISTRICT #: METRO
IPLOT NAME: d1901148_th13_xpl
PATH & FILENAME: Projects/DM_ROS/013/1901/148/Design/XS/d1901148_th13_xpl.dgn

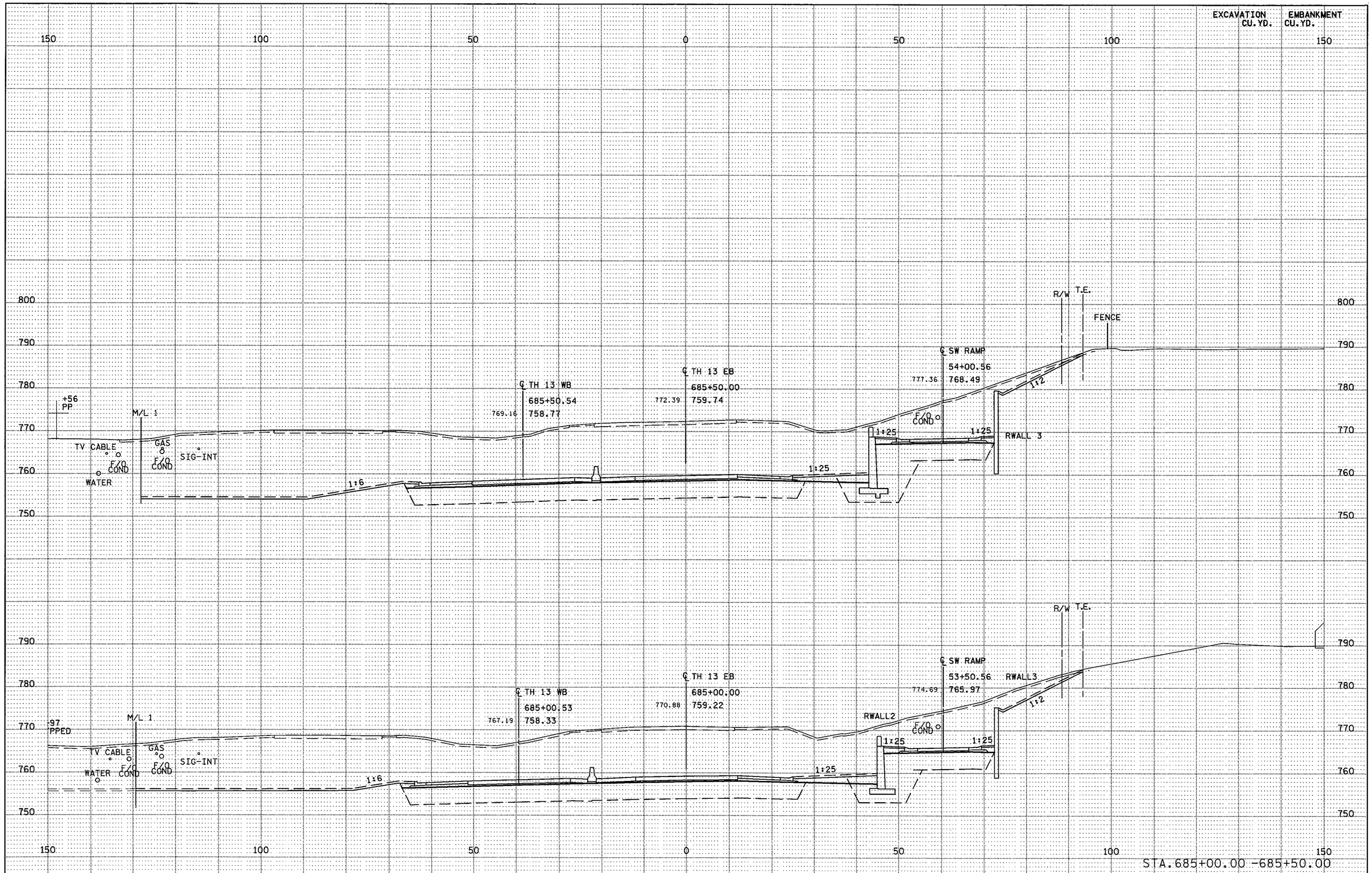

S.P. 179-020-031 S.P. 019-605-028 | STATE PROJ. NO. 1901-148 (TH 13) SHEET NO. X21 OF X137 SHEETS

DISTRICT * : METRO
IPLOT NAME: d1901148_th13_xpl
PATH & FILENAME: Projects/DM_ROS/013/1901/148/Design/XS/d1901148_th13_xpl.dgn
PLOTTED/REVISED: 14-JUN-2012 09:04

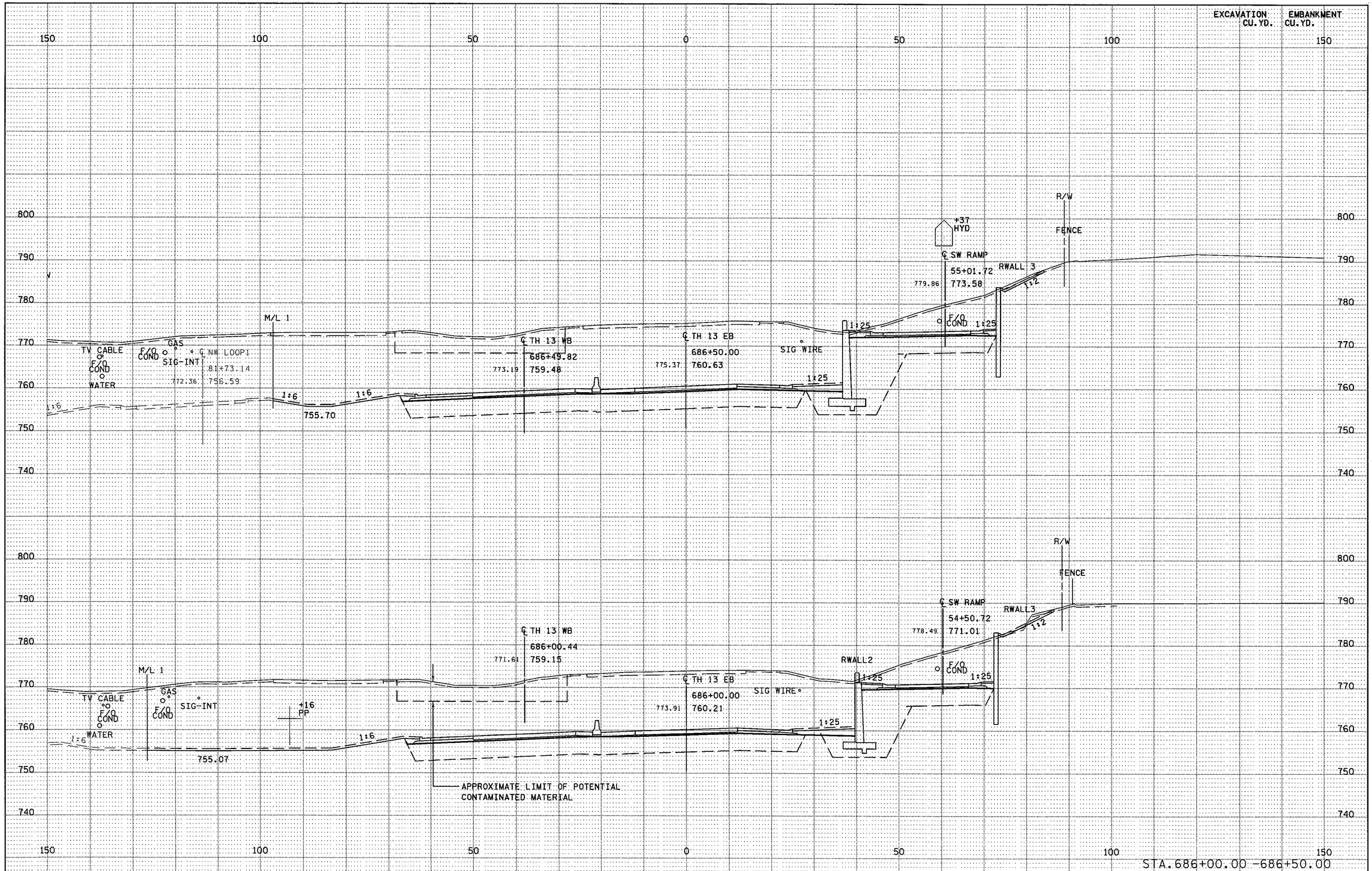

S.P. 179-020-031 S.P. 019-605-028 | STATE PROJ. NO. 1901-148 (TH 13) SHEET NO. X22 OF X137 SHEETS

DISTRICT " : METRO
IPLOT NAME: d1901148_th13_xpl
PATH & FILENAME: Projects/DM_ROS/013/1901/148/Design/XS/d1901148_th13_xpl.dgn
PLOTTED/REVISED: 14-JUN-2012 09:04

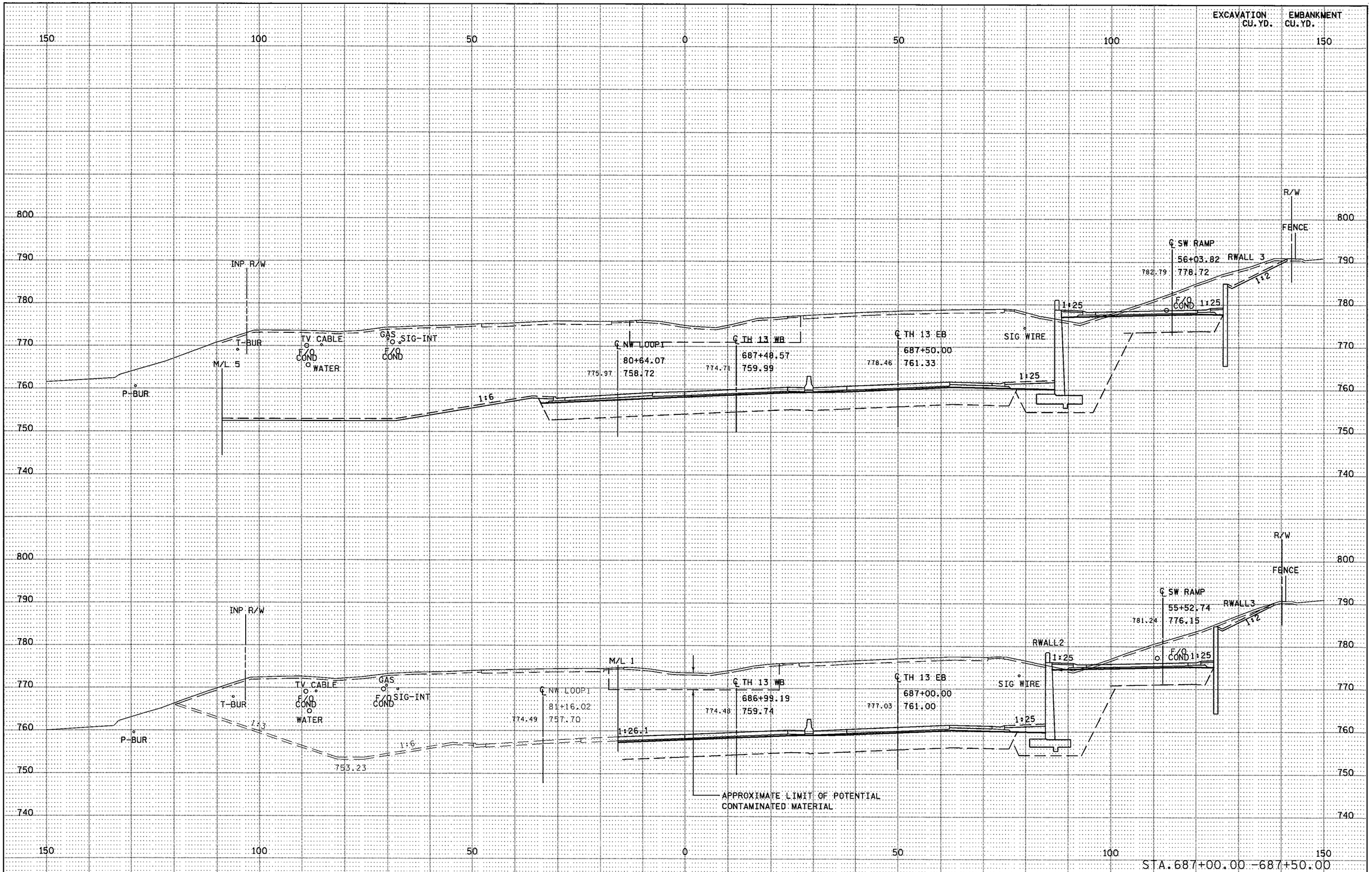

S.P. 179-020-031 S.P. 019-605-028 | STATE PROJ. NO. 1901-148 (TH 13) SHEET NO. X23 OF X137 SHEETS

DISTRICT #: METRO
IPLOT NAME: d1901148_th13_xpl
PATH & FILENAME: Projects/DM_ROS/013/1901/148/Design/XS/d1901148_th13_xpl.dgn
PLOTTED/REVISED: 14-JUN-2012 09:05

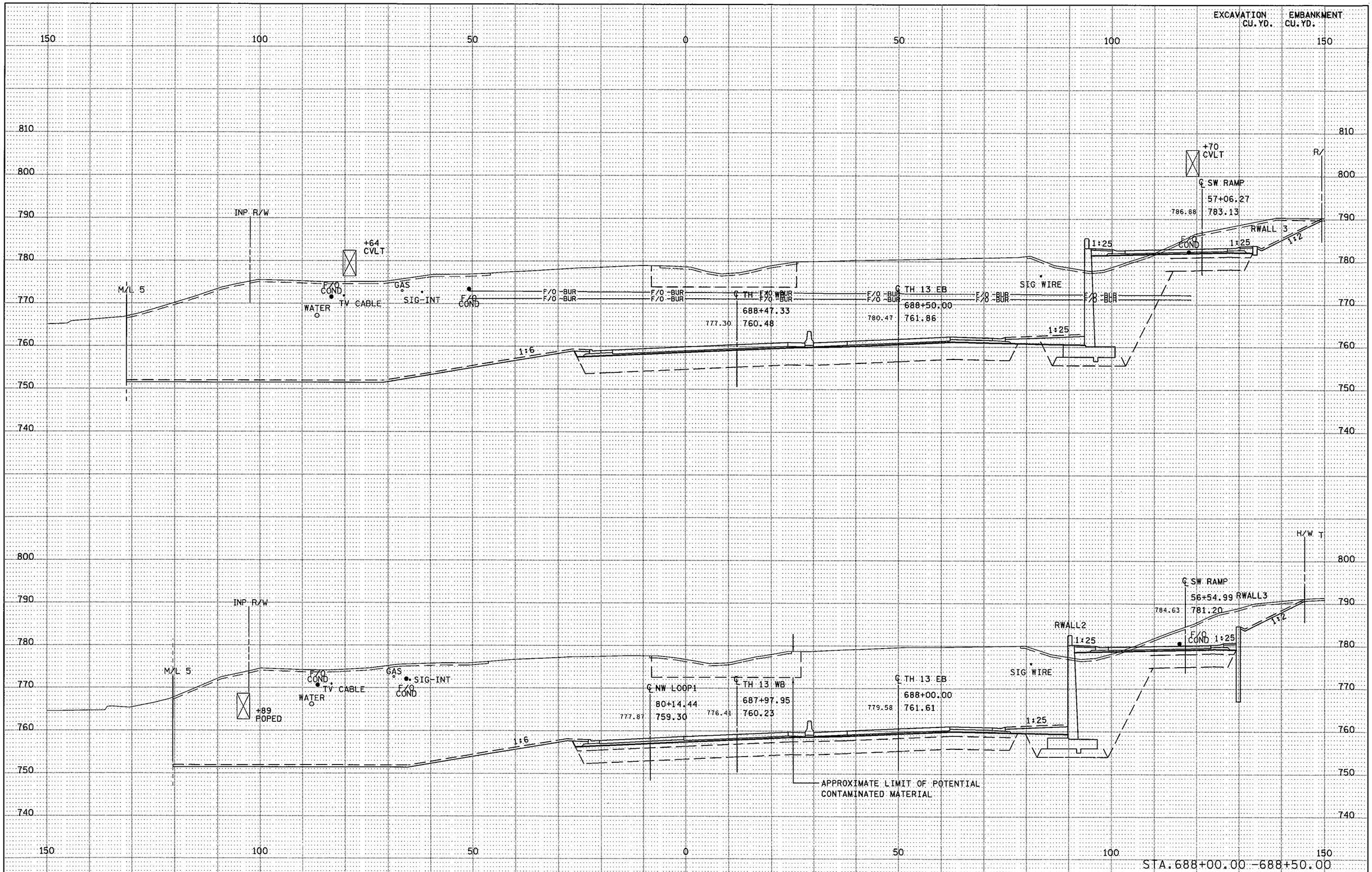

S.P. 179-020-031 S.P. 019-605-028

STATE PROJ. NO. 1901-148 (TH 13) SHEET NO. X24 OF X137 SHEETS

PLOTTED/REVISED: 11-JUN-2012 06:58

DISTRICT #: METRO
IPLOT NAME: d1901148_th13_xpl17
PATH & FILENAME: Projects/DM_ROS/013/1901/148/Design/XS/d1901148_th13_xpl.dgn

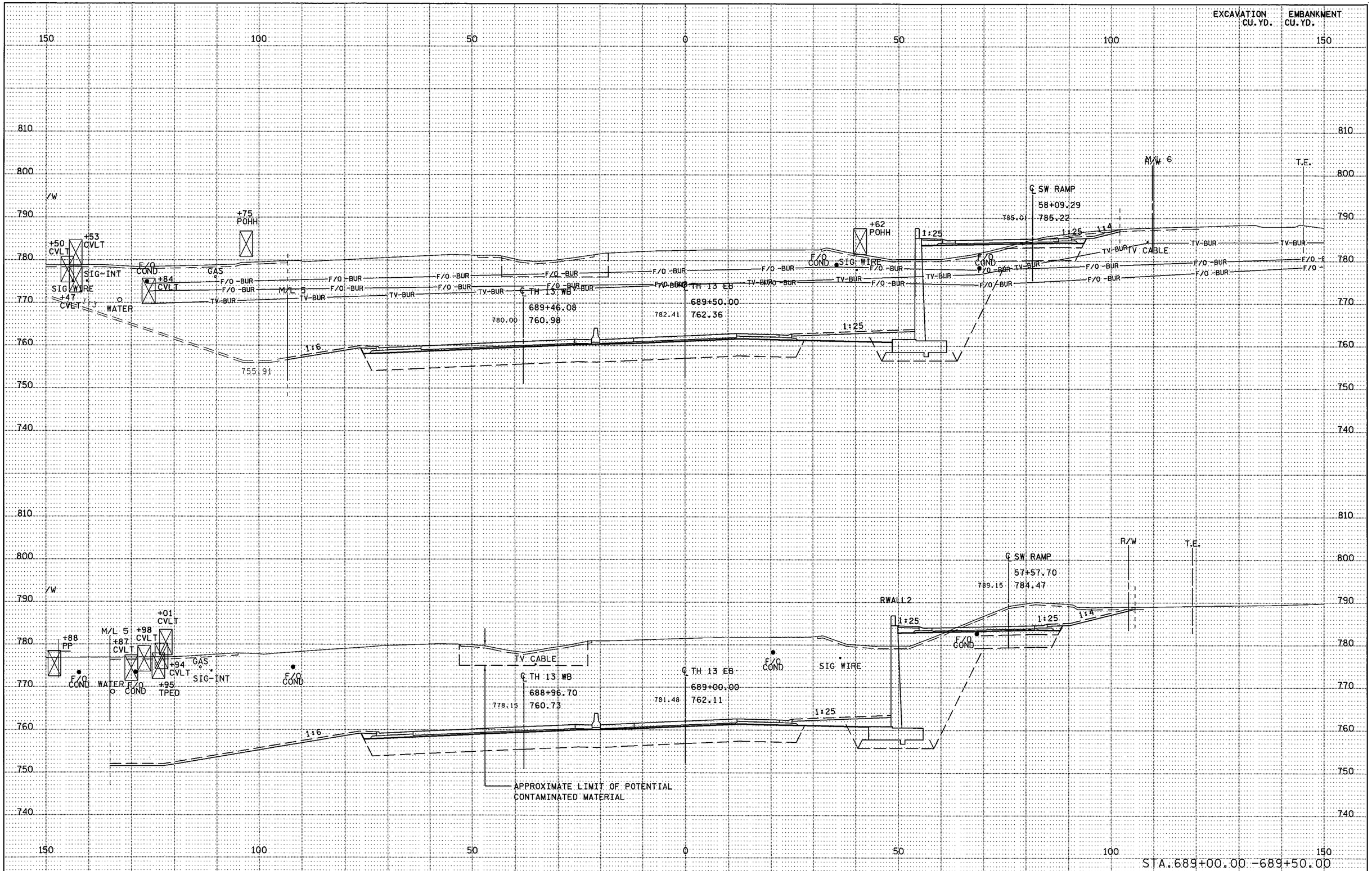

S.P. 179-020-031 S.P. 019-605-028 | STATE PROJ. NO. 1901-148 (TH 13) SHEET NO. X25 OF X137 SHEETS

PLOTTED/REVISED: 11-JUN-2012 06:58

DISTRICT *: METRO
IPLOT NAME: d190l148_th13_xpl8
PATH & FILENAME: Projects/DM_ROS/013/190l/148/Design/XS/d190l148_th13_xpl.dgn

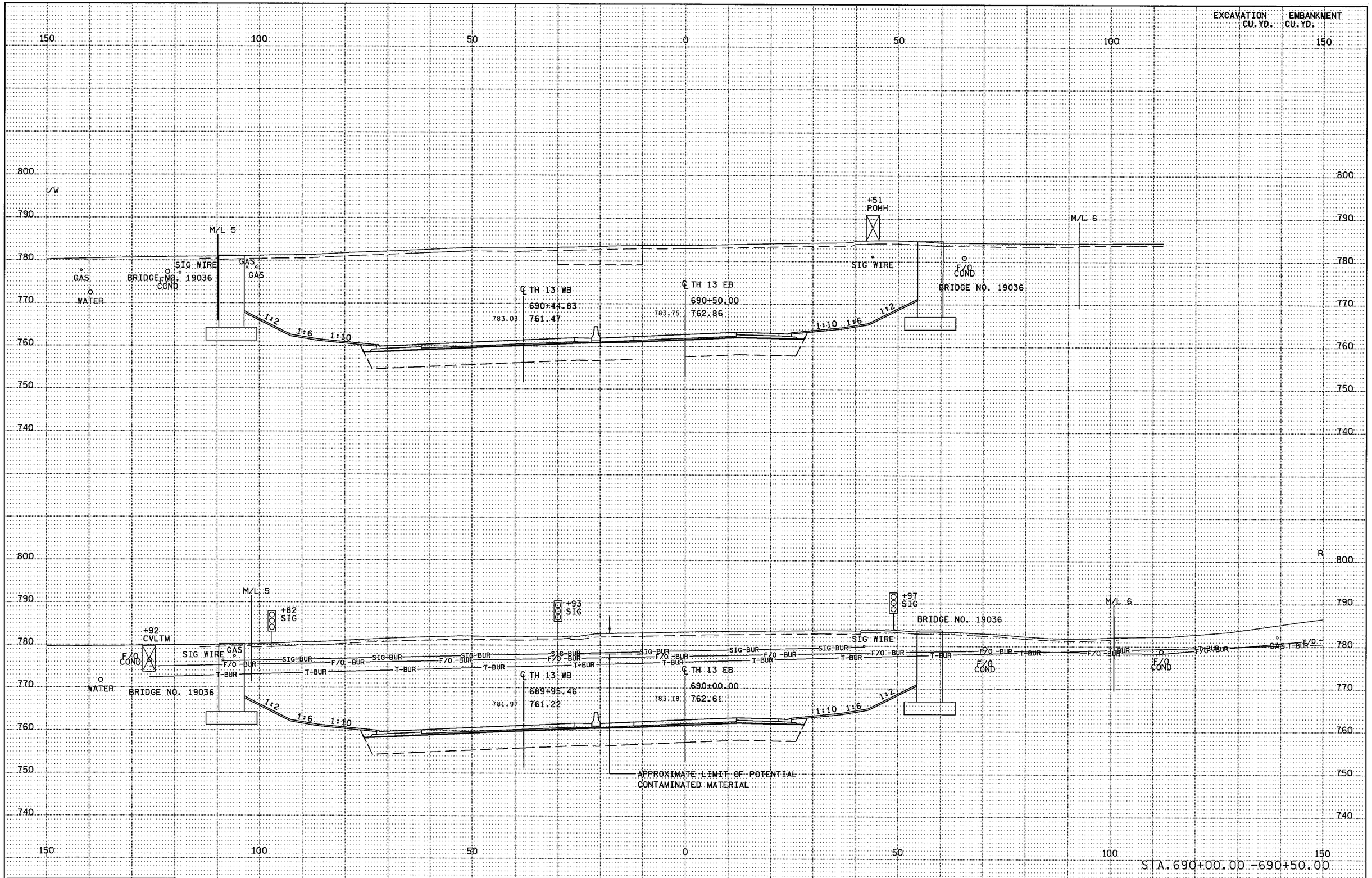

S.P. 179-020-031 S.P. 019-605-028

STATE PROJ. NO. 1901-148 (TH 13) SHEET NO. X26 OF X137 SHEETS

DISTRICT # : METRO
IPLOT NAME: d1901148_th13_xpl
PATH & FILENAME: Projects/DM_ROS/013/1901/148/Design/XS/d1901148_th13_xpl.dgn
PLOTTED/REVISED: 14-JUN-2012 08:57

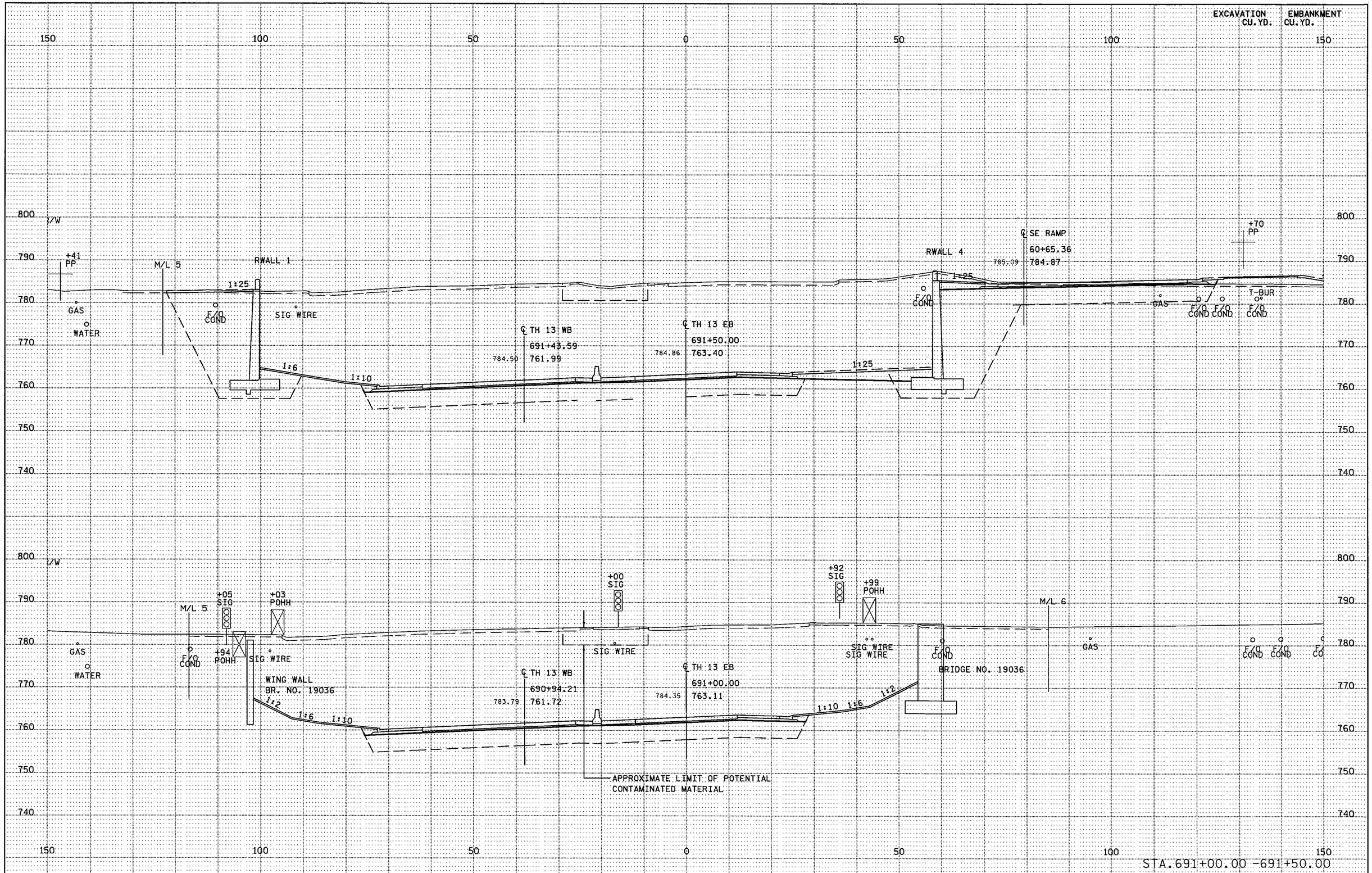

S.P. 179-020-031 S.P. 019-605-028 | STATE PROJ. NO. 1901-148 (TH 13) SHEET NO. X27 OF X137 SHEETS

DISTRICT *: METRO
IPLOT NAME: d190l148_th13_xpl
PATH & FILENAME: Projects/DM_ROS/013/190l/148/Design/XS/d190l148_th13_xpl.dgn
PLOTTED/REVISED: 14-JUN-2012 08:58

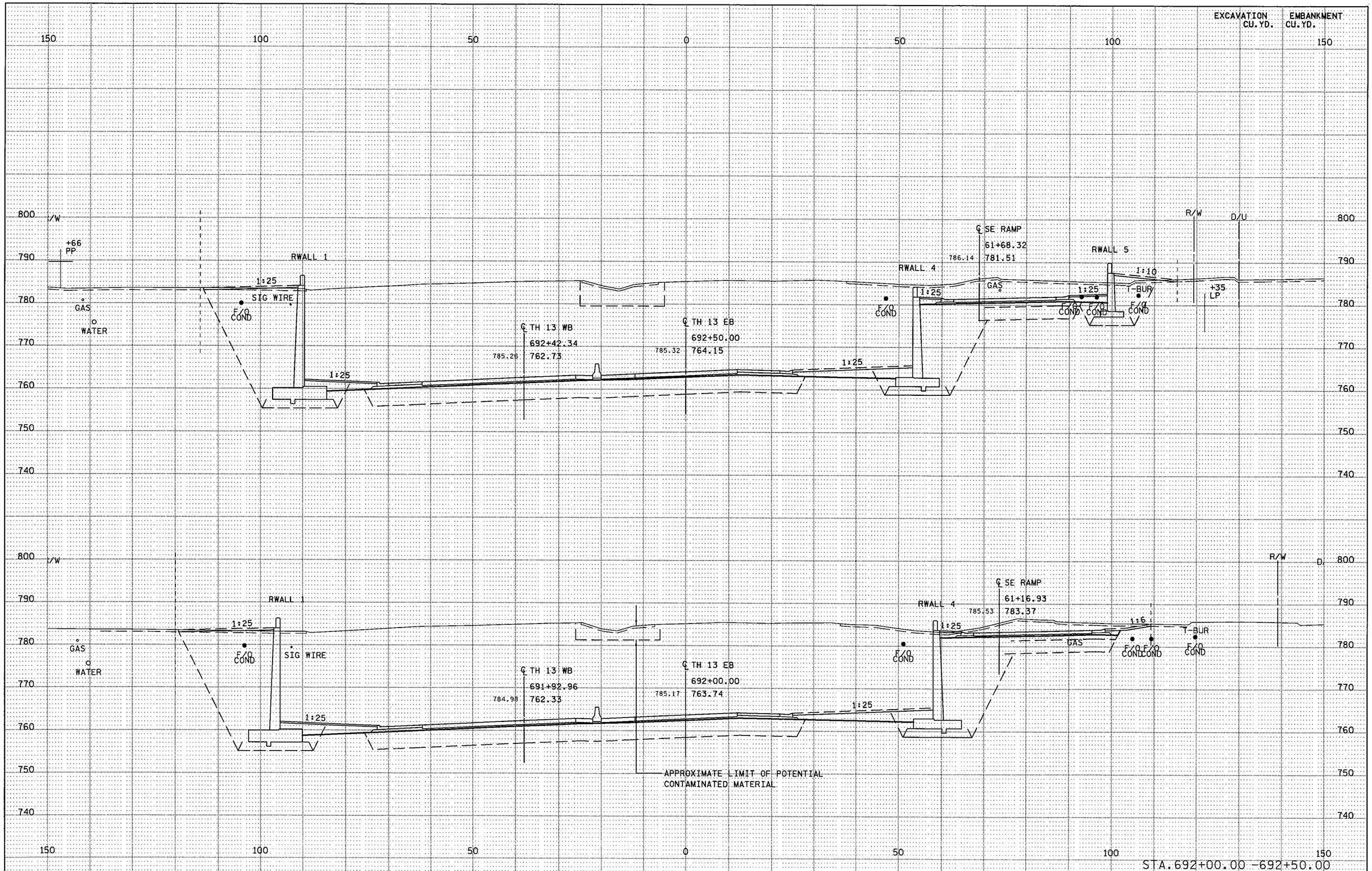

PLOTTED/REVISED: 11-JUN-2012 07:04

DISTRICT #: METRO
IPLOT NAME: d1901148_th13_xpl21
PATH & FILENAME: Projects/DM_ROS/013/1901/148/Design/XS/d1901148_th13_xpl.dgn

S.P. 179-020-031 S.P. 019-605-028 | STATE PROJ. NO. 1901-148 (TH 13) SHEET NO. X28 OF X137 SHEETS

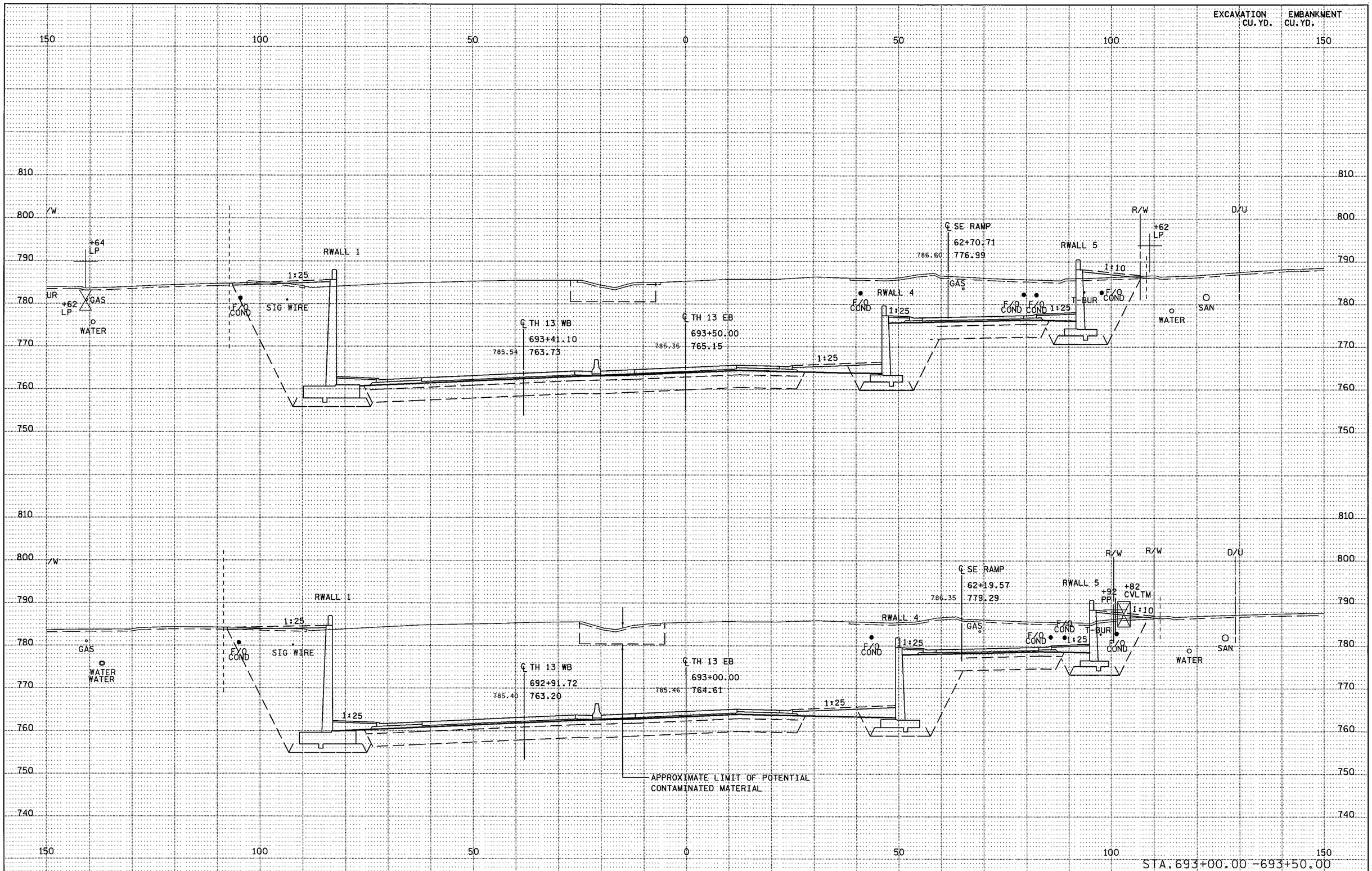

S.P. 179-020-031 S.P. 019-605-028 | STATE PROJ. NO. 1901-148 (TH 13) SHEET NO. X29 OF X137 SHEETS

PLOTTED/REVISED: 11-JUN-2012 07:04

DISTRICT # : METRO
IPLOT NAME: d1901148_th13_xpl22
PATH & FILENAME: Projects/DM_ROS/013/1901/148/Design/XS/d1901148_th13_xpl.dgn

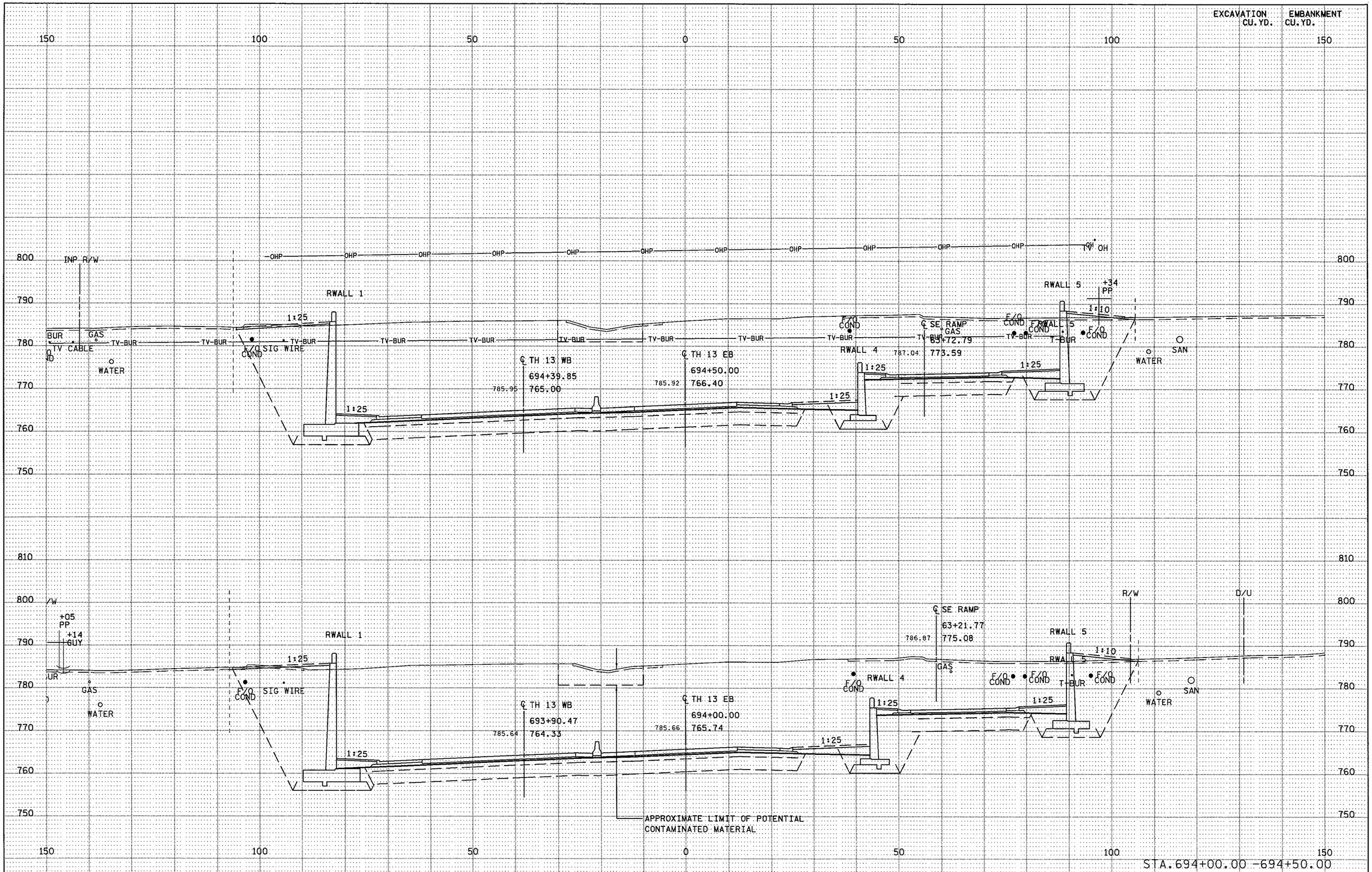

S.P. 179-020-031 S.P. 019-605-028 | STATE PROJ. NO. 1901-148 (TH 13) SHEET NO. X30 OF X137 SHEETS

PLOTTED/REVISED: 11-JUN-2012 07:04

DISTRICT * : METRO
IPLOT NAME: d1901148_thl3_xpl23
PATH & FILENAME: Projects/DM_ROS/013/1901/148/Design/XS/d1901148_thl3_xpl.dgn

PLOTTED/REVISED: 11-JUN-2012 07:05
DISTRICT *: METRO
IPLOT NAME: d1901148_th13_xpl24
PATH & FILENAME: Projects/DM_ROS/013/1901/148/Design/XS/d1901148_th13_xpl.dgn

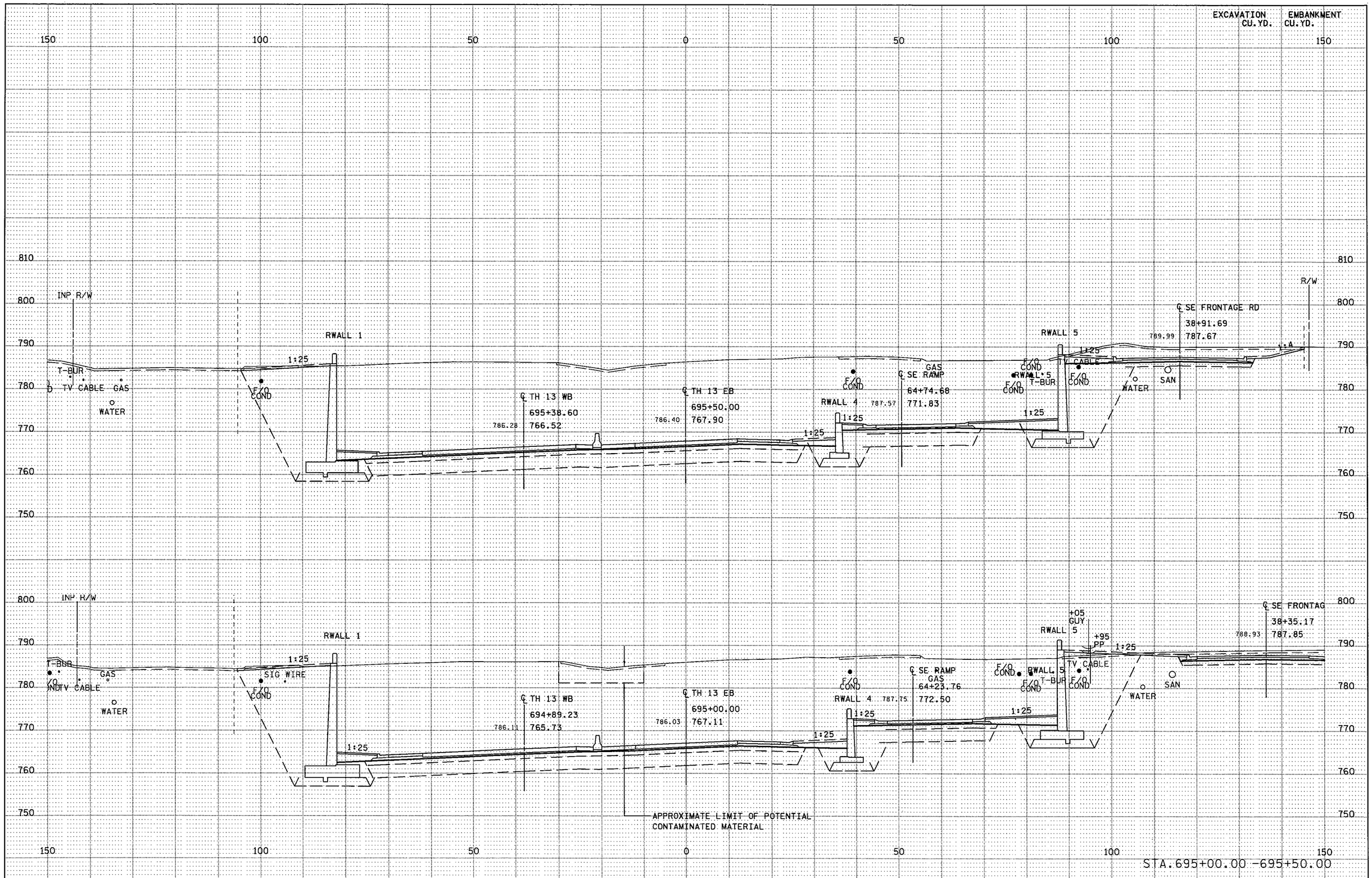

S.P. 179-020-031 S.P. 019-605-028 | STATE PROJ. NO. 1901-148 (TH 13) SHEET NO. X31 OF X137 SHEETS

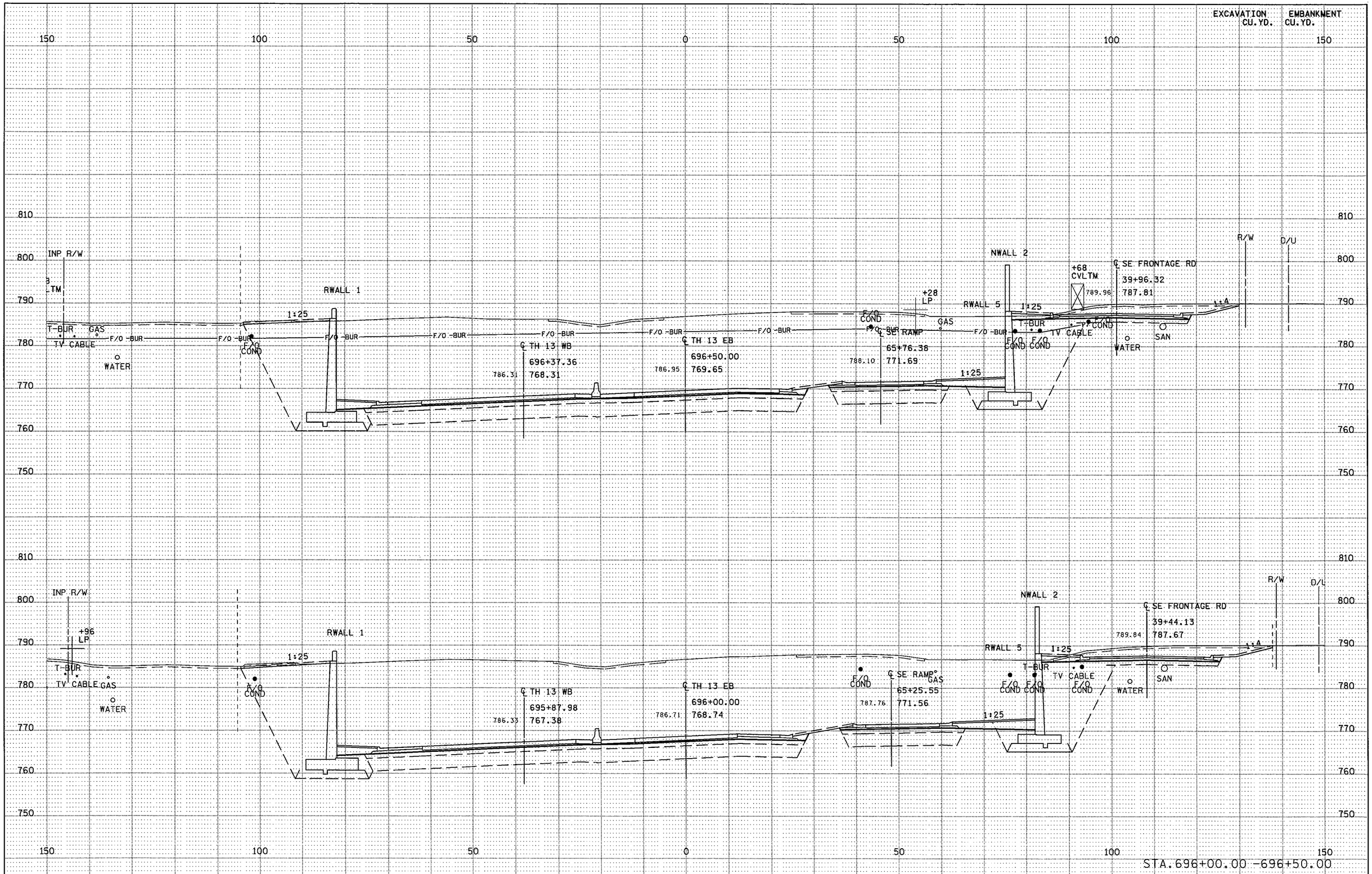

S.P. 179-020-031 S.P. 019-605-028 | STATE PROJ. NO. 1901-148 (TH 13) SHEET NO. X32 OF X137 SHEETS

DISTRICT #: METRO
IPLOT NAME: d1901148_th13_xpl25
PATH & FILENAME: Projects/DM_ROS/013/1901/148/Design/XS/d1901148_th13_xpl.dgn
PLOTTED/REVISED: 11-JUN-2012 07:05

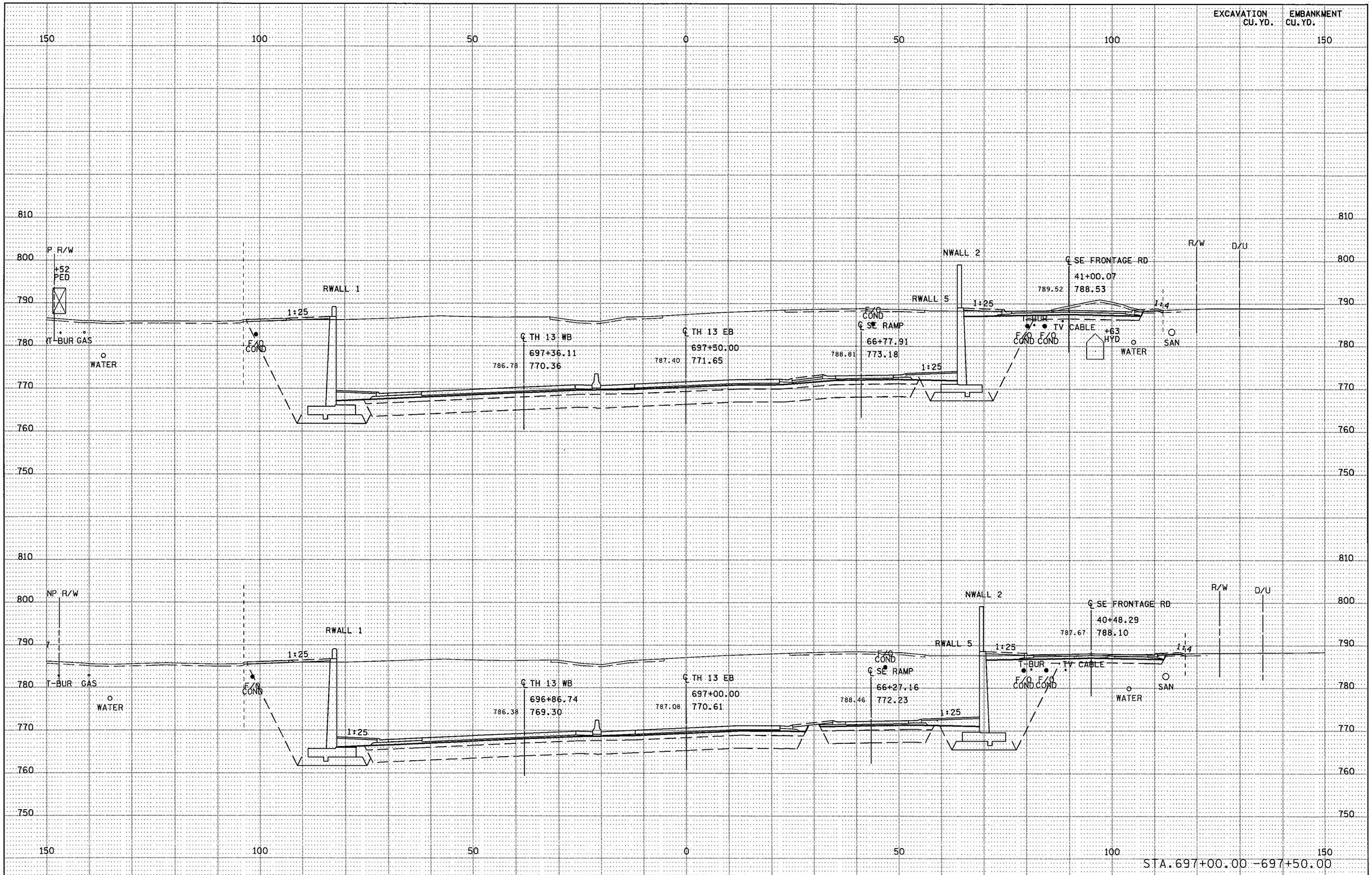

S.P. 179-020-031 S.P. 019-605-028 | STATE PROJ. NO. 1901-148 (TH 13) SHEET NO. X33 OF X137 SHEETS

PLOTTED/REVISED: 11-JUN-2012 07:05

DISTRICT #: METRO
IPLOT NAME: d190l148_th13_xpl26
PATH & FILENAME: Projects/DM_ROS/013/190l/148/Design/XS/d190l148_th13_xpl.dgn

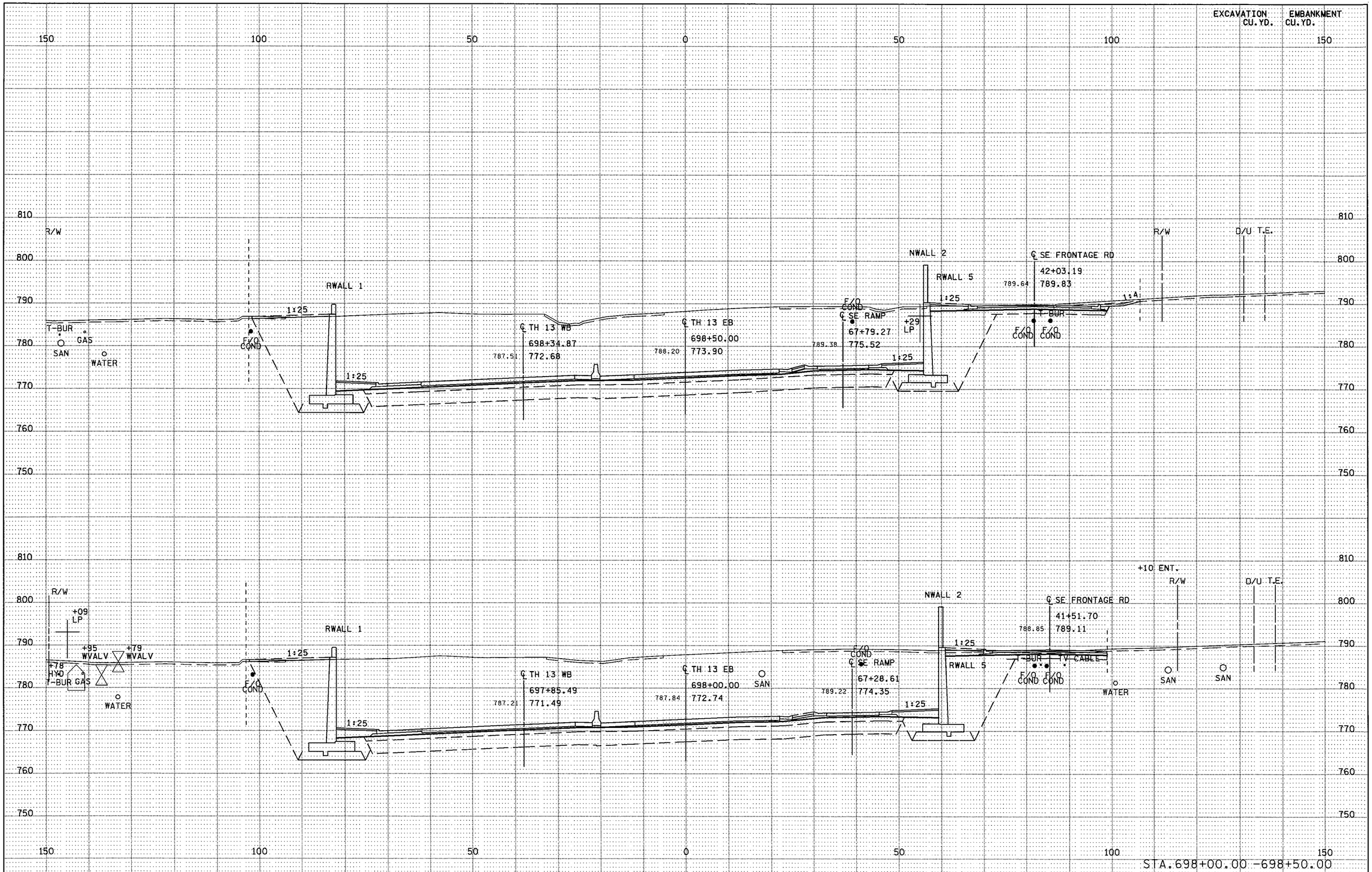

S.P. 179-020-031 S.P. 019-605-028 | STATE PROJ. NO. 1901-148 (TH 13) SHEET NO. X34 OF X137 SHEETS

PLOTTED/REVISED: 11-JUN-2012 07:05

DISTRICT *: METRO
IPLOT NAME: d190l148_thl3_xpl27
PATH & FILENAME: Projects/DM_ROS/013/190l/148/Design/XS/d190l148_thl3_xpl.dgn

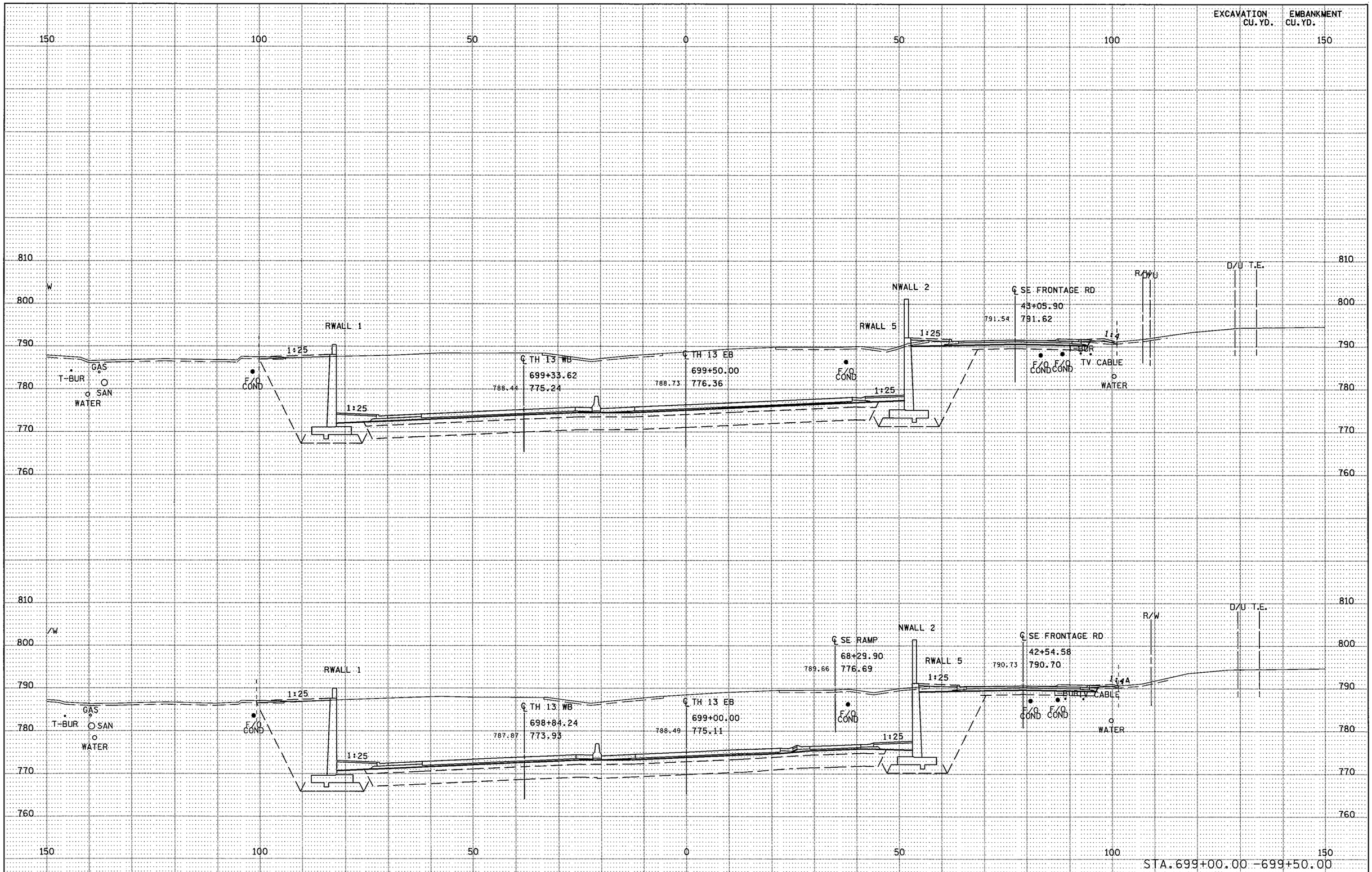

S.P. 179-020-031 S.P. 019-605-028 | STATE PROJ. NO. 1901-148 (TH 13) SHEET NO. X35 OF X137 SHEETS

DISTRICT * : METRO
IPLOT NAME: d1901148_th13_xpl28
PATH & FILENAME: Projects/DM_ROS/013/1901/148/Design/XS/d1901148_th13_xpl.dgn
PLOTTED/REVISED: 11-JUN-2012 07:05

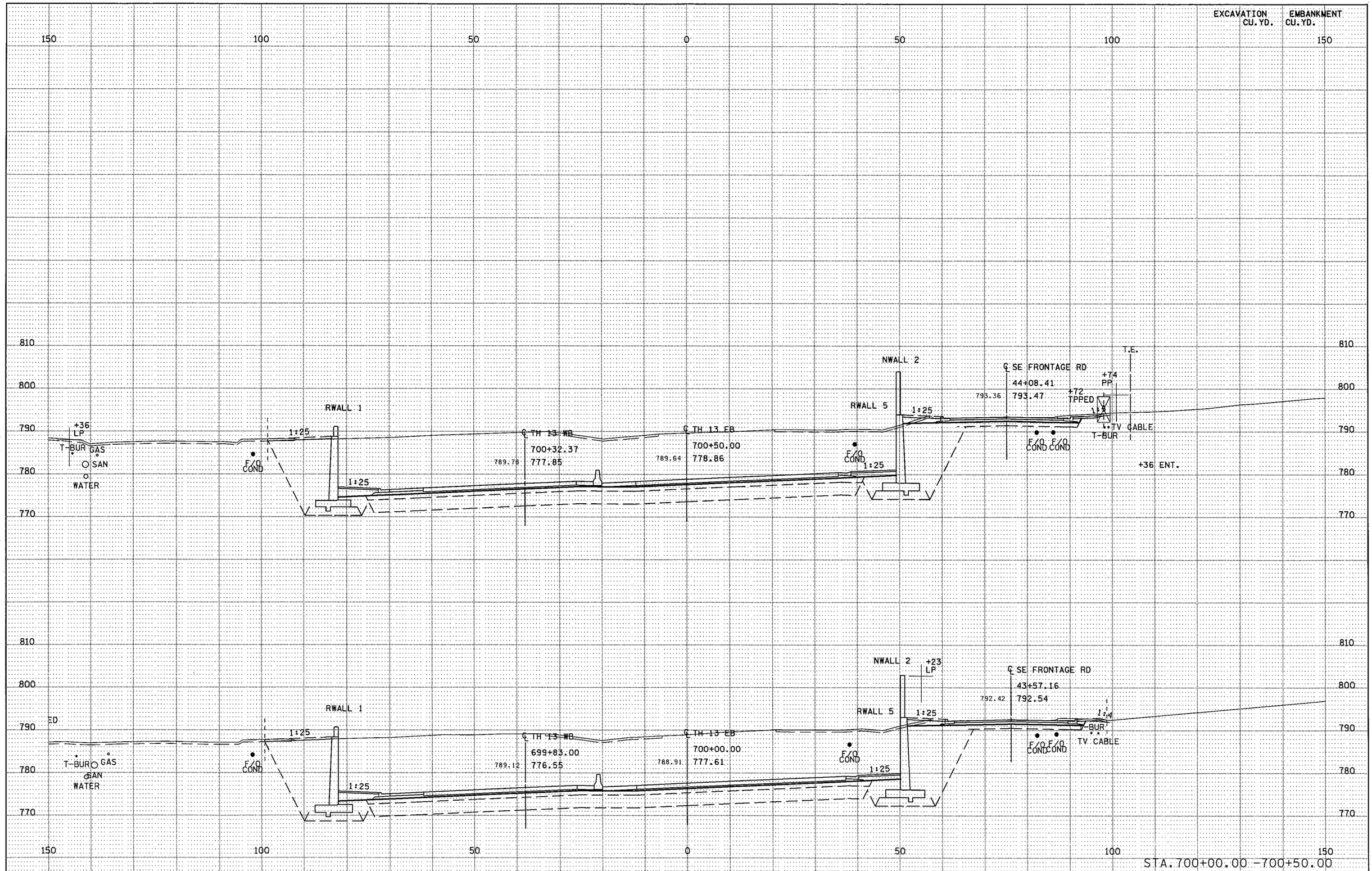

S.P. 179-020-031 S.P. 019-605-028

STATE PROJ. NO. 1901-148 (TH 13) SHEET NO. X36 OF X137 SHEETS

PLOTTED/REVISED: 11-JUN-2012 07:05

DISTRICT # : METRO
IPLOT NAME: d1901148_th13_xpl29
PATH & FILENAME: Projects/DM_ROS/013/1901/148/Design/XS/d1901148_th13_xpl.dgn

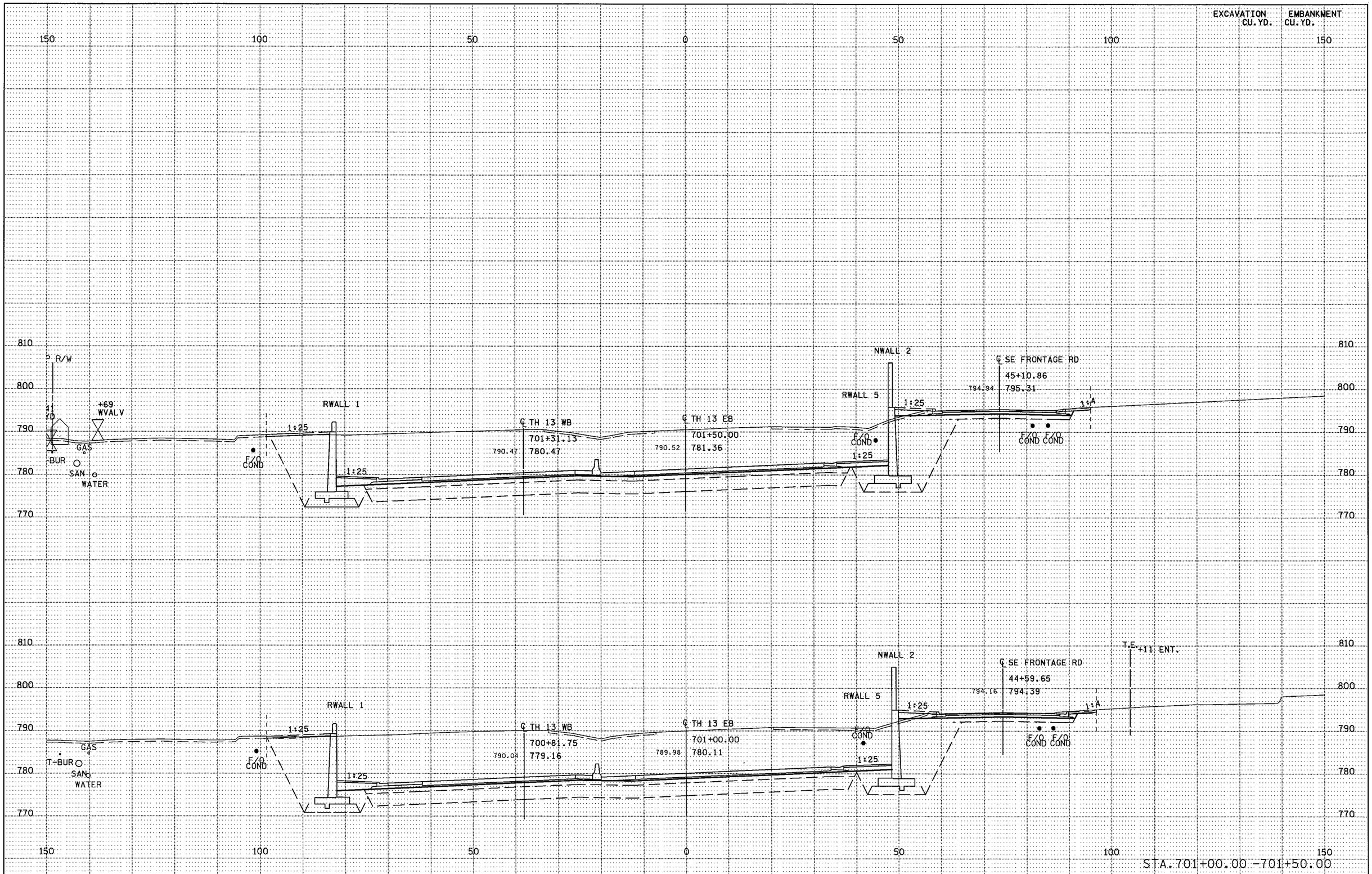

S.P. 179-020-031 S.P. 019-605-028 | STATE PROJ. NO. 1901-148 (TH 13) SHEET NO. X37 OF X137 SHEETS

PLOTTED/REVISED: 11-JUN-2012 07:06

DISTRICT * : METRO
IPLOT NAME: d1901148_th13_xpl30
PATH & FILENAME: Projects/DM_ROS/013/1901/148/Design/XS/d1901148_th13_xpl.dgn

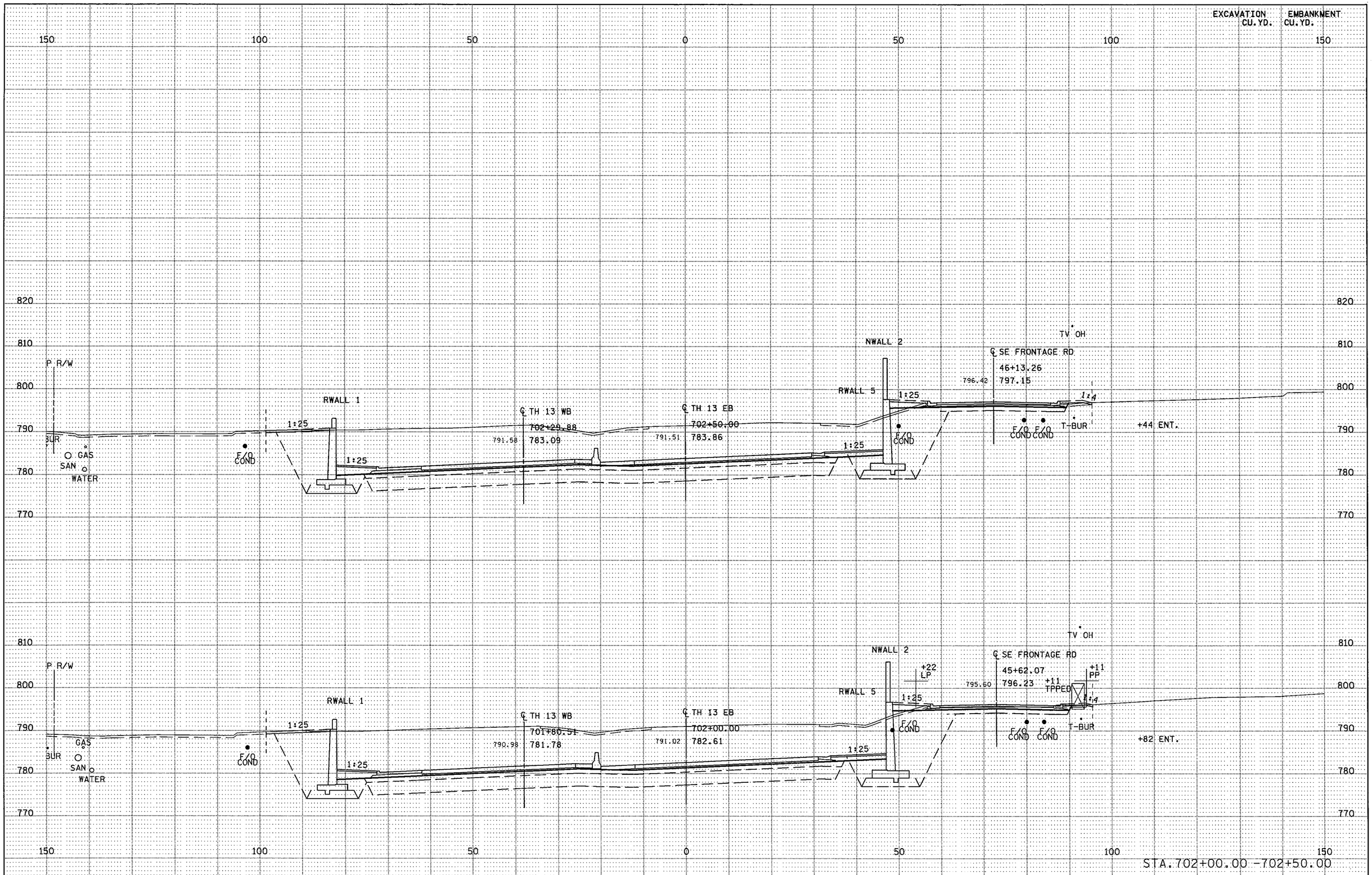

S.P. 179-020-031 S.P. 019-605-028 | STATE PROJ. NO. 1901-148 (TH 13) SHEET NO. X38 OF X137 SHEETS

DISTRICT *: METRO
IPLOT NAME: d9011148_th13_xpl31
PATH & FILENAME: Projects/DM_ROS/013/1901/148/Design/XS/d9011148_th13_xpl.dgn
PLOTTED/REVISED: 11-JUN-2012 07:11

PLOTTED/REVISED: 11-JUN-2012 07:11
DISTRICT #: METRO
IPLOT NAME: d1901148_th13_xpl32
PATH & FILENAME: Projects/DM_ROS/013/1901/148/Design/XS/d1901148_th13_xpl.dgn

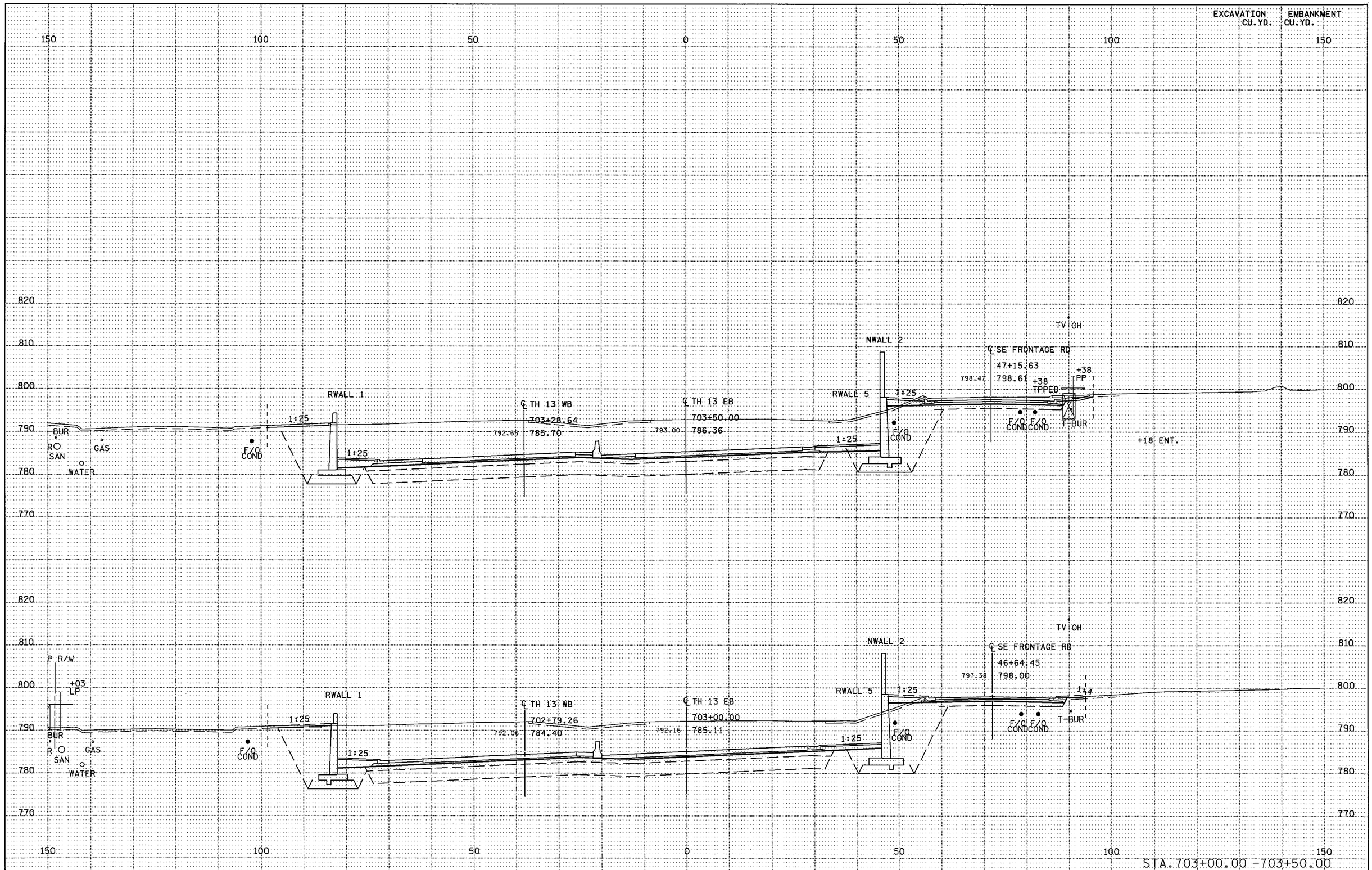

S.P. 179-020-031 S.P. 019-605-028 | STATE PROJ. NO. 1901-148 (TH 13) SHEET NO. X39 OF X137 SHEETS

PLOTTED/REVISED: 11-JUN-2012 07:18
DISTRICT # : METRO
IPLOT NAME: d1901148_th13_xpl46
PATH & FILENAME: Projects/DM_ROS/013/1901/148/Design/XS/d1901148_th13_xpl.dgn

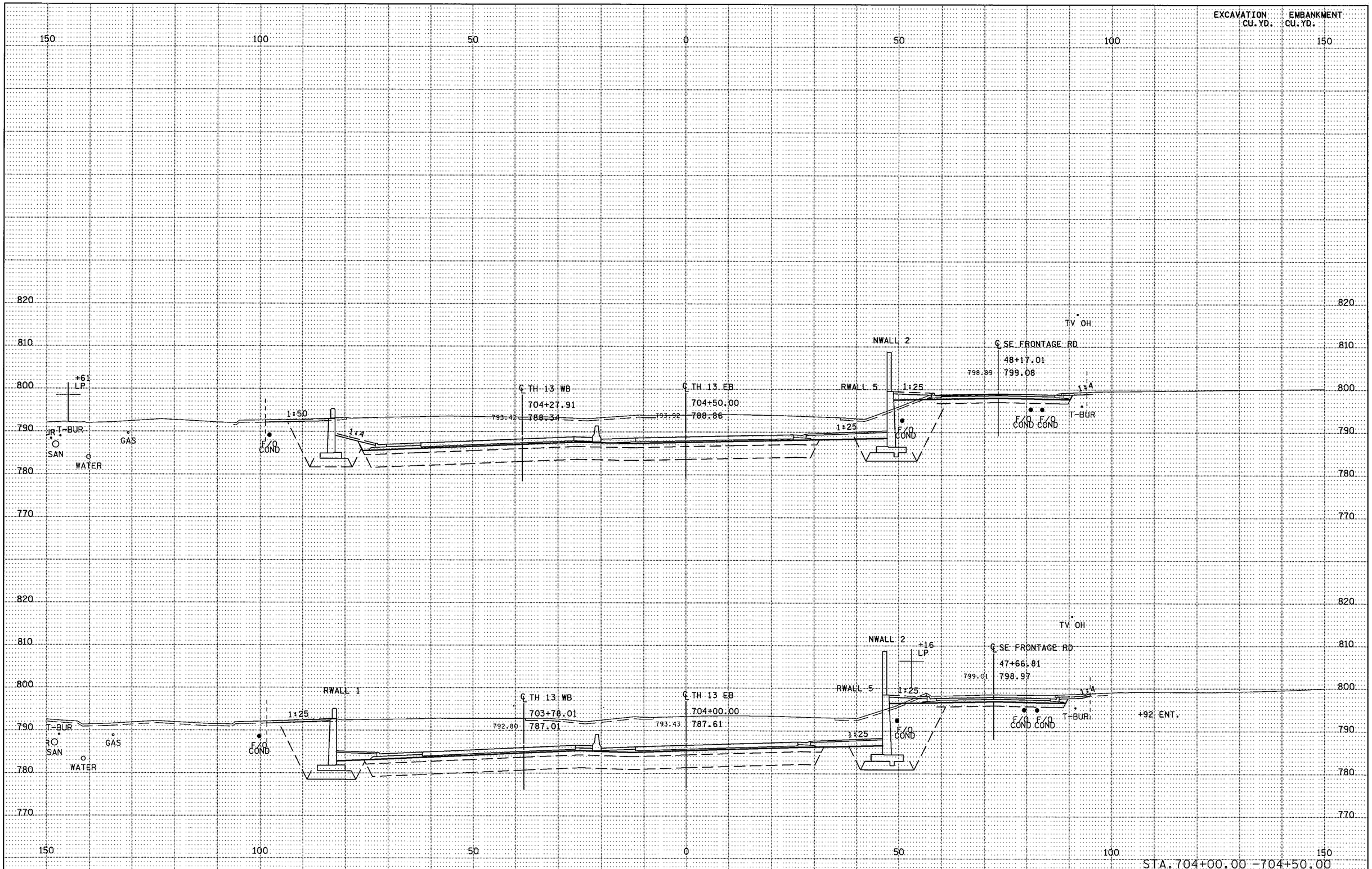

S.P. 179-020-031 S.P. 019-605-028 | STATE PROJ. NO. 1901-148 (TH 13) SHEET NO. X40 OF X137 SHEETS

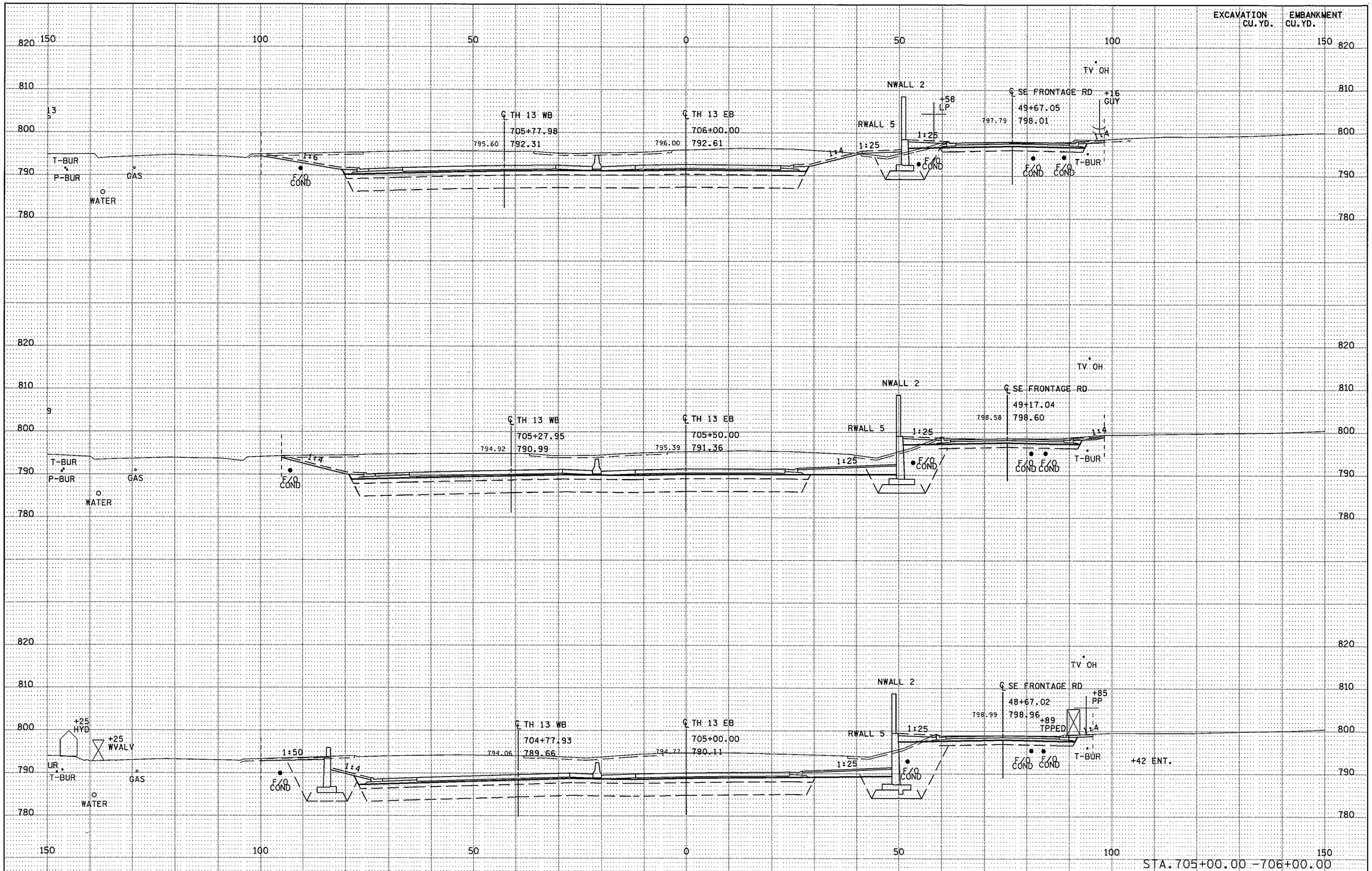

PLOTTED/REVISED: 11-JUN-2012 07:19

DISTRICT *: METRO
IPLOT NAME: d190l148_th13_xpl47
PATH & FILENAME: Projects/DM_R05/013/190l/148/Design/XS/d190l148_th13_xpl.dgn

S.P. 179-020-031 S.P. 019-605-028 | STATE PROJ. NO. 1901-148 (TH 13) SHEET NO. X41 OF X137 SHEETS

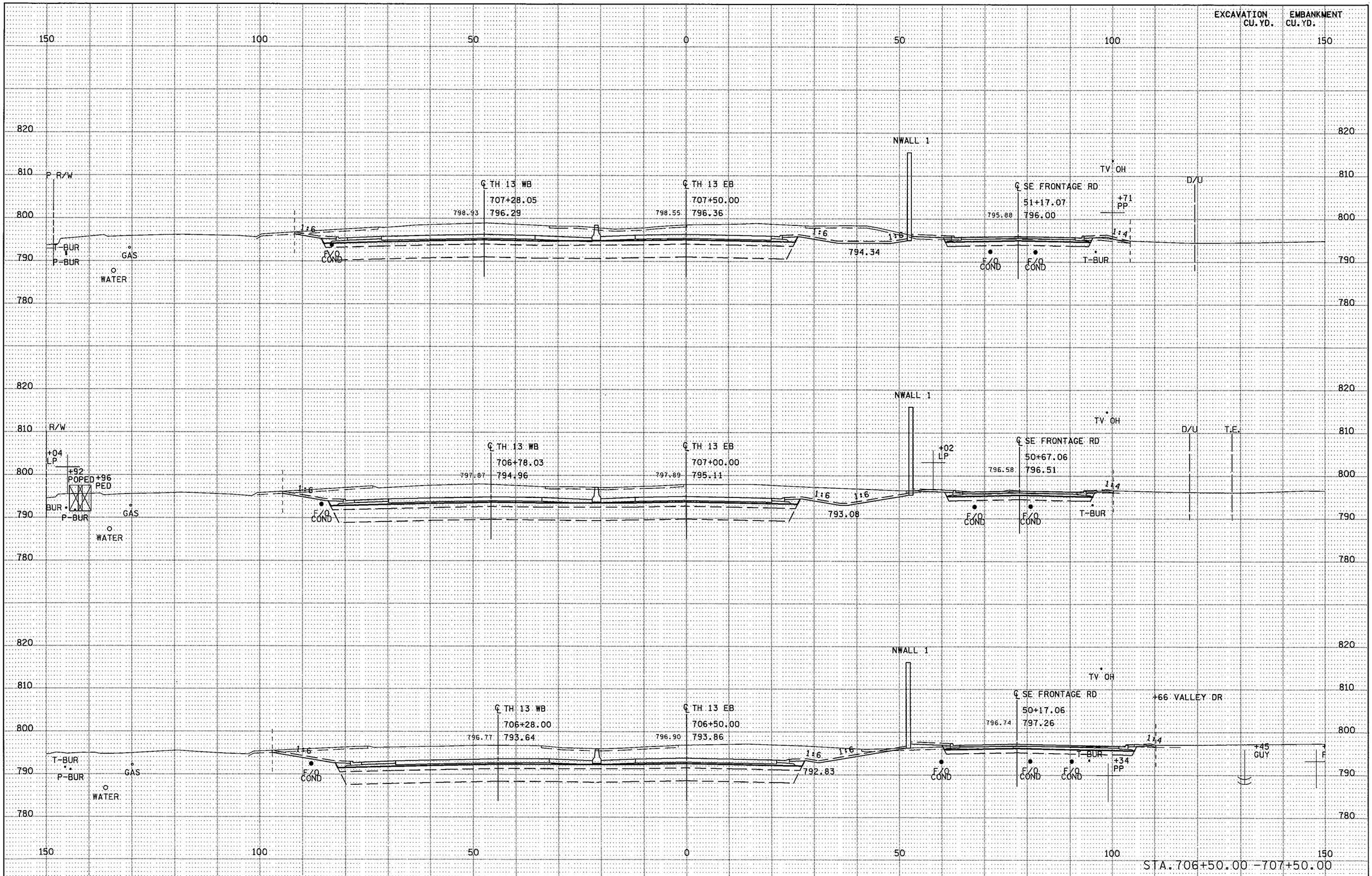

S.P. 179-020-031 S.P. 019-605-028 | STATE PROJ. NO. 1901-148 (TH 13) SHEET NO. X42 OF X137 SHEETS

PLOTTED/REVISED: 11-JUN-2012 07:11

DISTRICT *: METRO
IPLOT NAME: d1901148_th13_xpl33
PATH & FILENAME: Projects/DM_ROS/013/1901/148/Design/XS/d1901148_th13_xpl.dgn

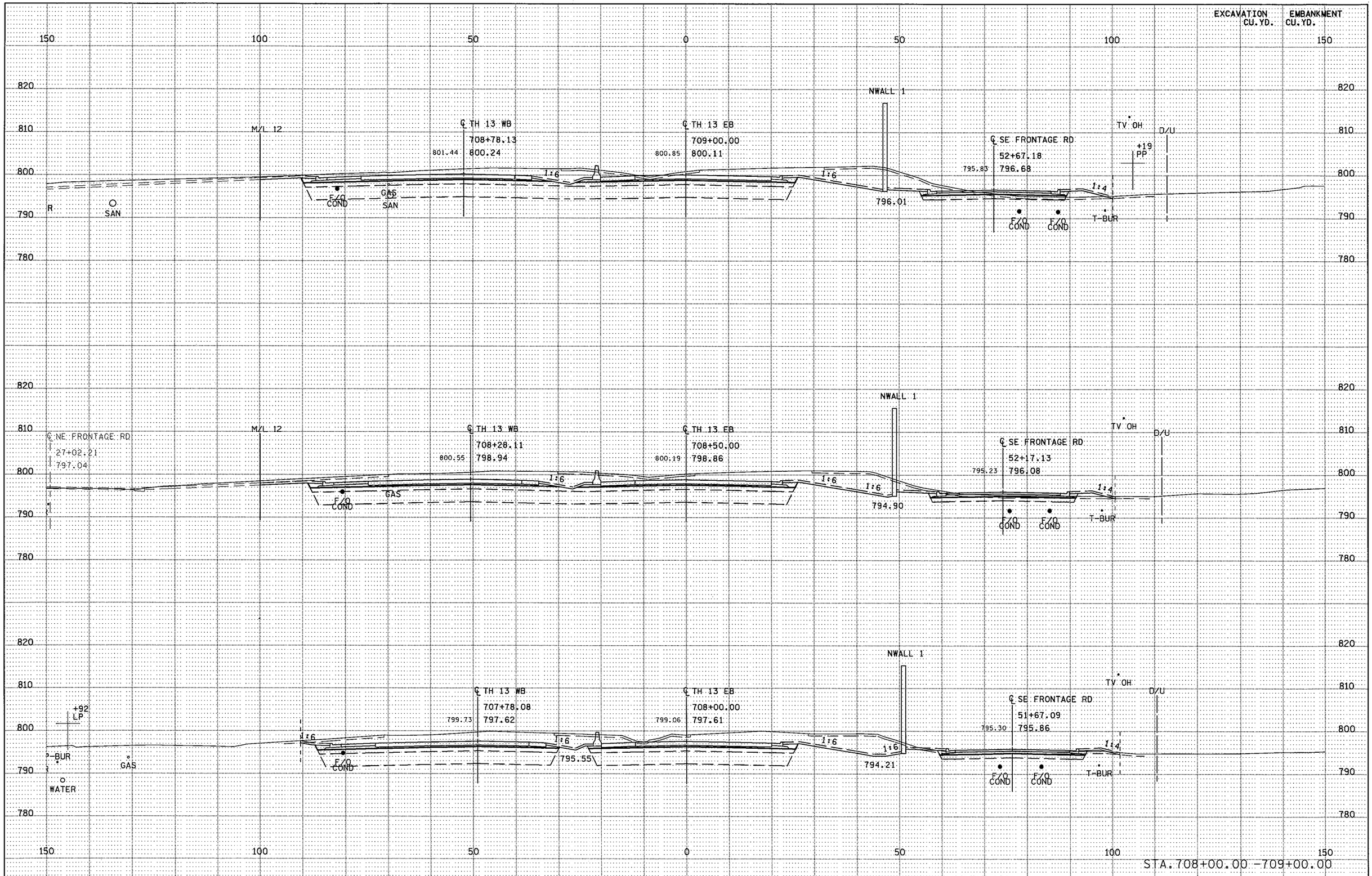

PLOTTED/REVISED: 11-JUN-2012 07:11

DISTRICT # : METRO
IPLOT NAME: d190l148_th13_xpl34
PATH & FILENAME: Projects/DM_ROS/013/190l/148/Design/XS/d190l148_th13_xpl.dgn

S.P. 179-020-031 S.P. 019-605-028 | STATE PROJ. NO. 1901-148 (TH 13) SHEET NO. X43 OF X137 SHEETS

PLOTTED/REVISED: 11-JUN-2012 07:19

DISTRICT * : METRO
IPLOT NAME: d190l148_th13_xpl48
PATH & FILENAME: Projects/DM_ROS/013/190l/148/Design/XS/d190l148_th13_xpl.dgn

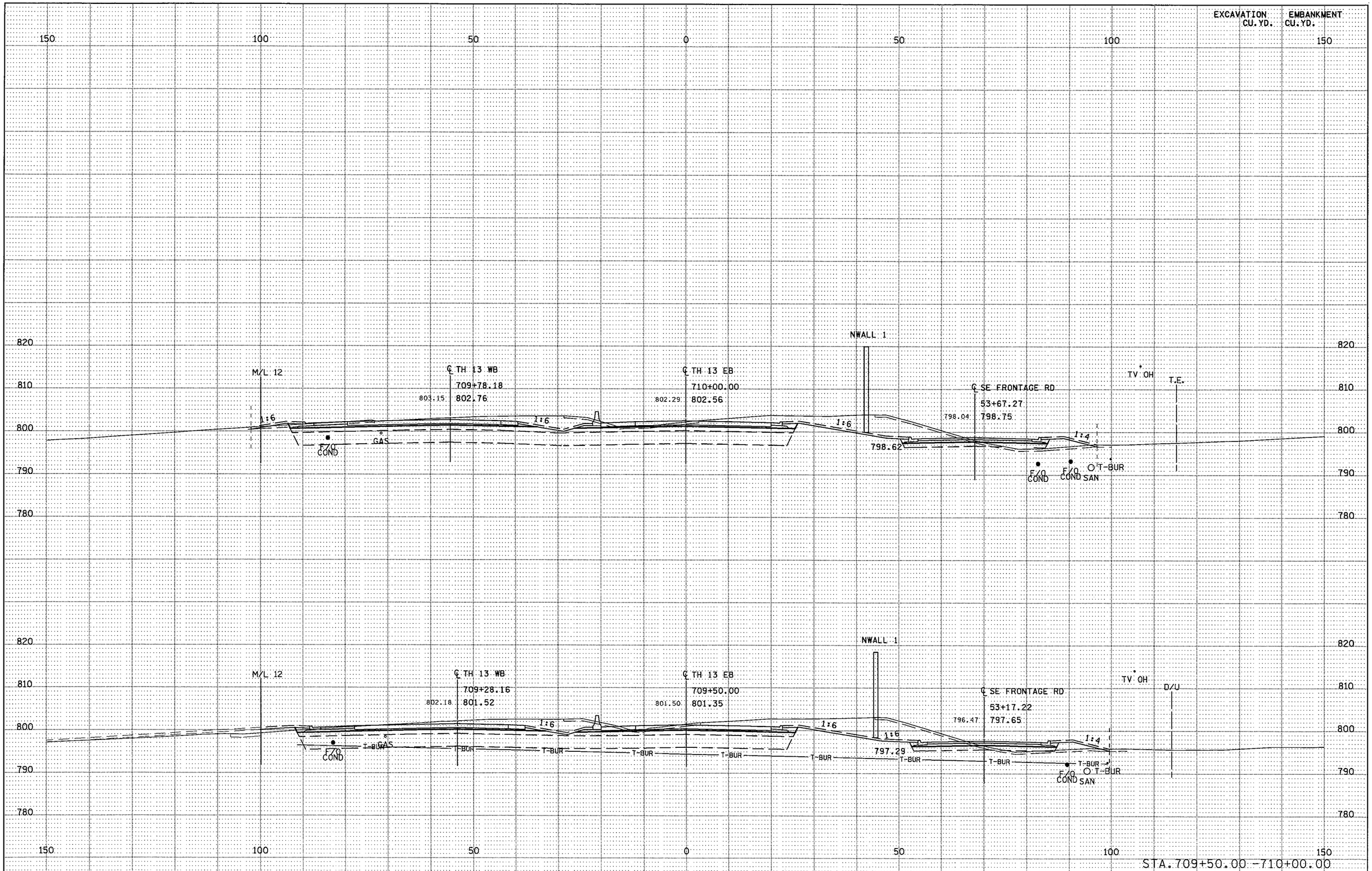

S.P. 179-020-031 S.P. 019-605-028 | STATE PROJ. NO. 1901-148 (TH 13) SHEET NO. X44 OF X137 SHEETS

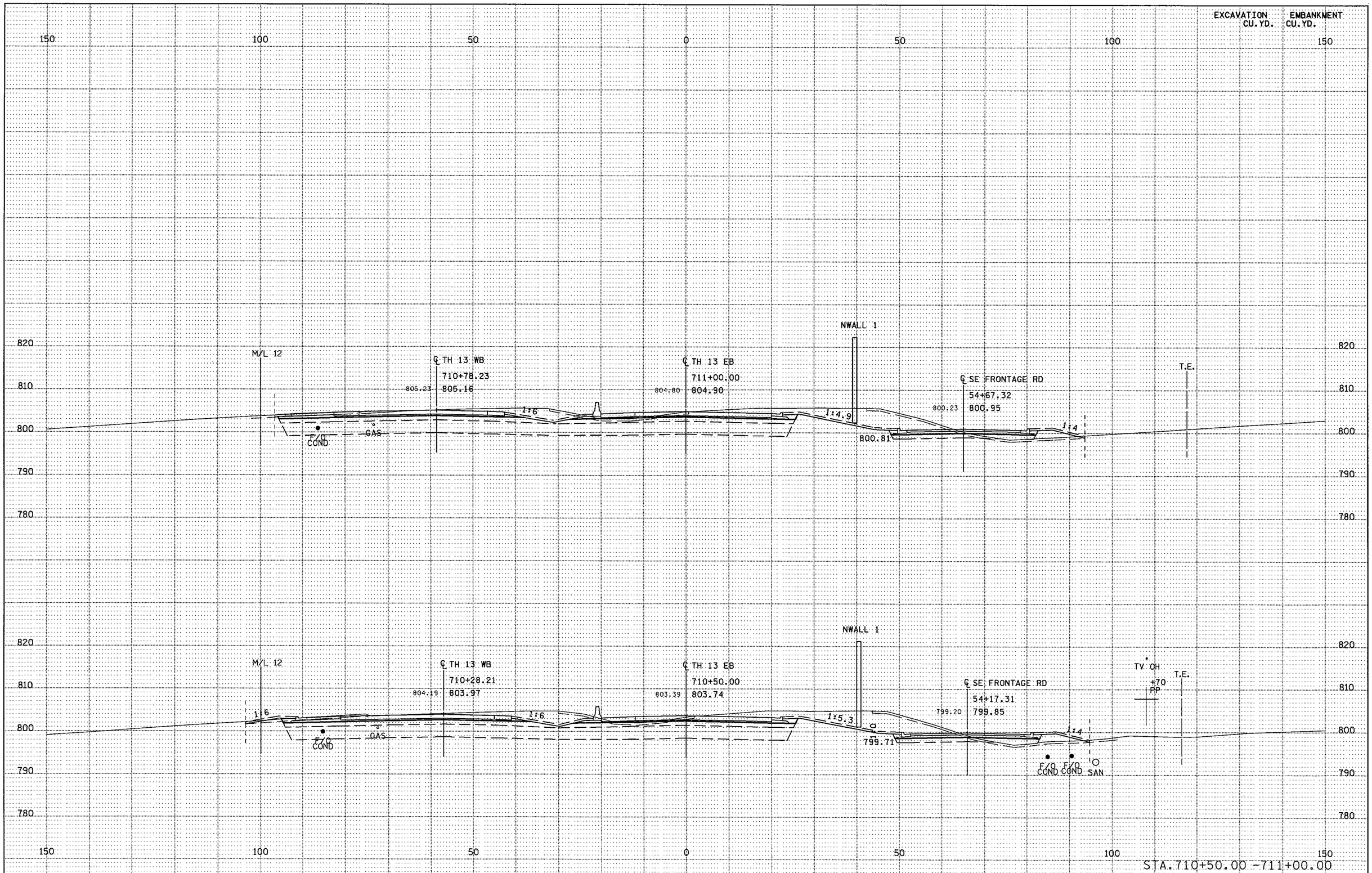

S.P. 179-020-031 S.P. 019-605-028 | STATE PROJ. NO. 1901-148 (TH 13) SHEET NO. X45 OF X137 SHEETS

PLOTTED/REVISED: 11-JUN-2012 07:12

DISTRICT *: METRO
IPLOT NAME: d1901148_th13_xpl35
PATH & FILENAME: Projects/DM_R05/013/1901/148/Design/XS/d1901148_th13_xpl.dgn

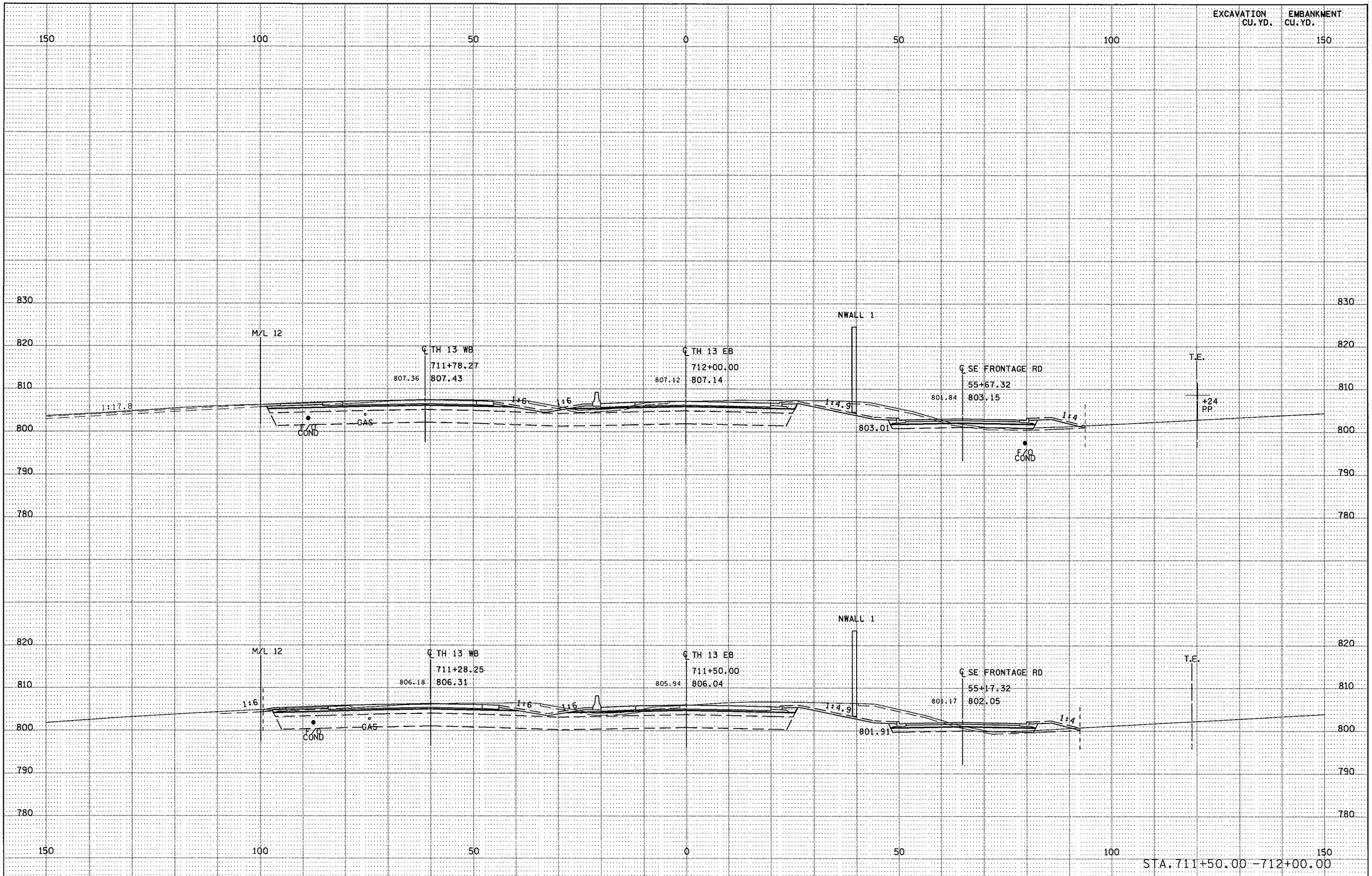

S.P. 179-020-031 S.P. 019-605-028 | STATE PROJ. NO. 1901-148 (TH 13) SHEET NO. X46 OF X137 SHEETS

DISTRICT " : METRO
IPLOT NAME: d9011148_th13_xpl36
PATH & FILENAME: Projects/DM_ROS/013/1901/148/Design/XS/d9011148_th13_xpl.dgn
PLOTTED/REVISED: 11-JUN-2012 07:12

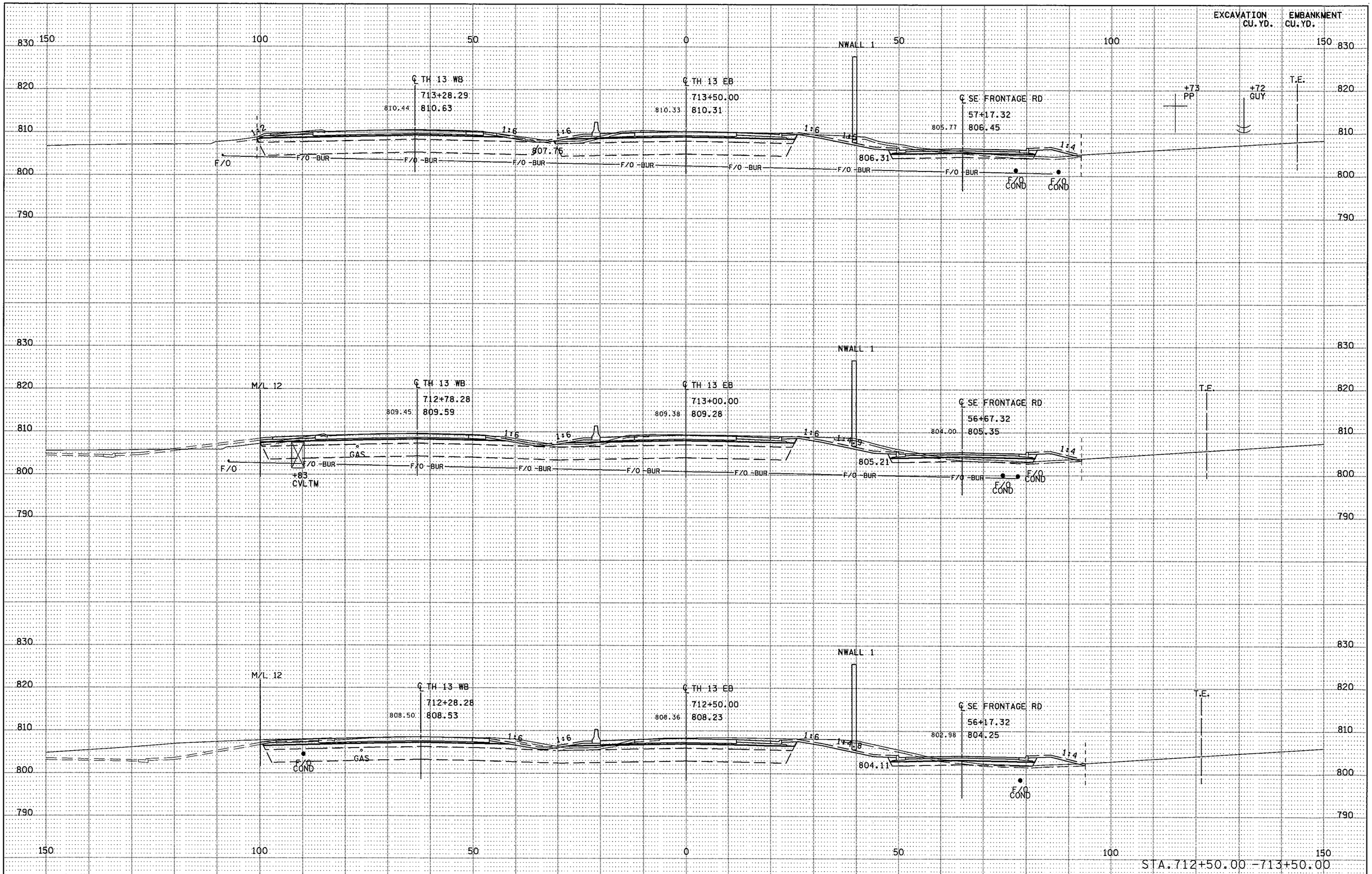

S.P. 179-020-031 S.P. 019-605-028 | STATE PROJ. NO. 1901-148 (TH 13) SHEET NO. X47 OF X137 SHEETS

DISTRICT # : METRO
IPLOT NAME: d190l148_th13_xpl37
PATH & FILENAME: Projects/DM_ROS/013/190l/148/Design/XS/d190l148_th13_xpl.dgn
PLOTTED/REVISED: 11-JUN-2012 07:12

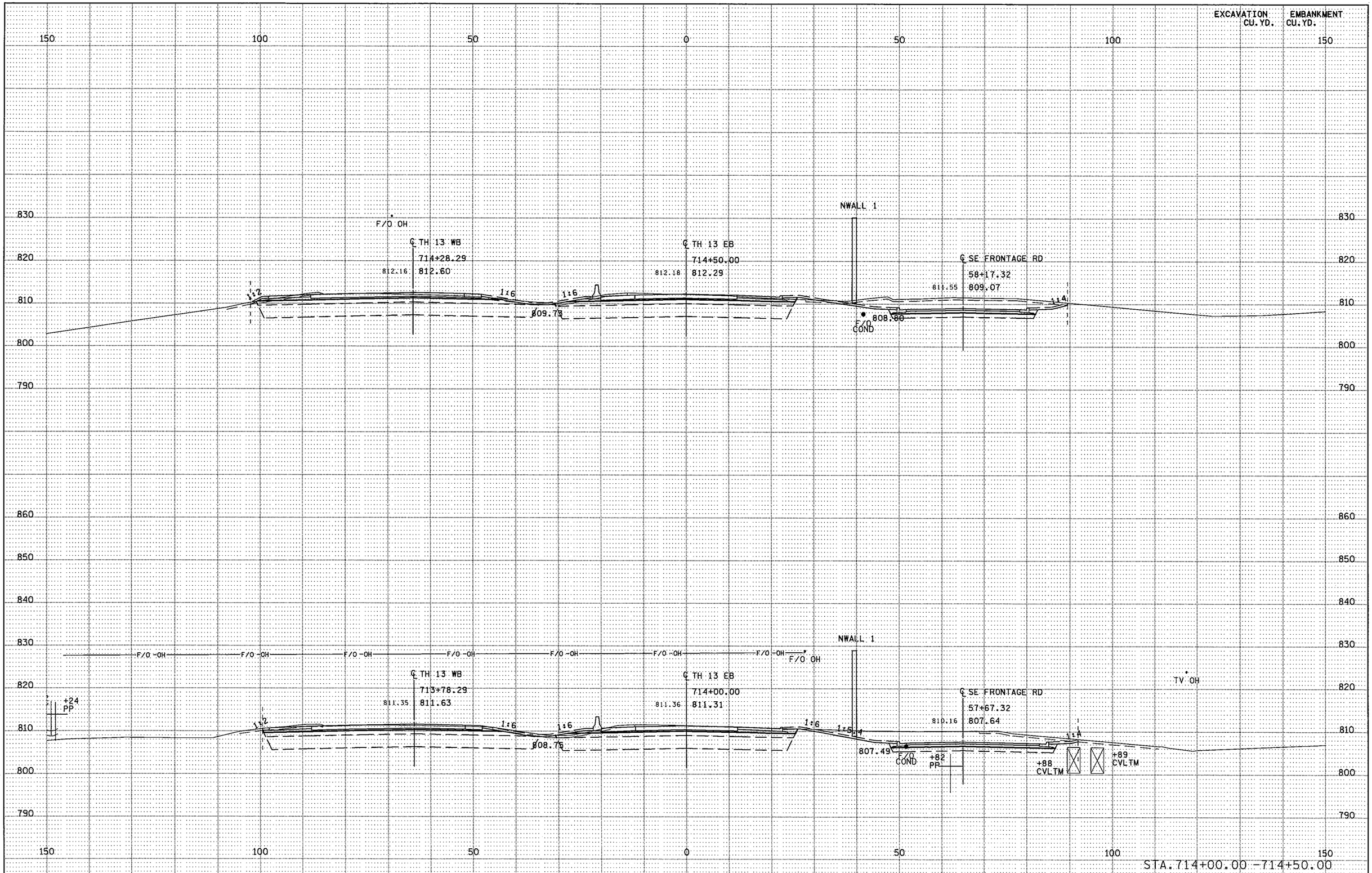

S.P. 179-020-031 S.P. 019-605-028

STATE PROJ. NO. 1901-148 (TH 13) SHEET NO. X48 OF X137 SHEETS

PLOTTED/REVISED: 11-JUN-2012 07:12

DISTRICT #: METRO
PLOT NAME: d1901148_th13_xp138
PATH & FILENAME: Projects/DM_ROS/013/1901/148/Design/XS/d1901148_th13_xp1.dgn

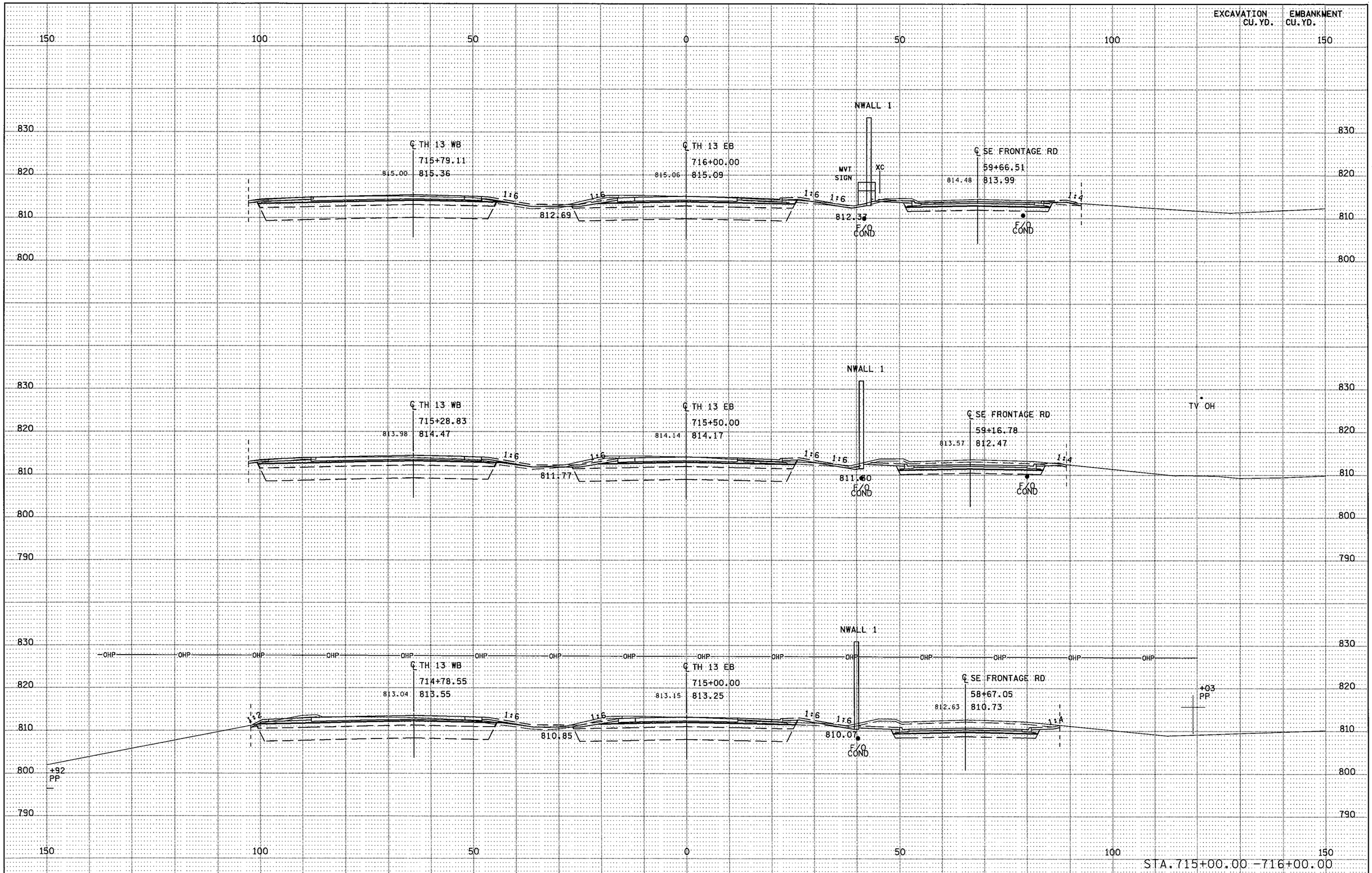

S.P. 179-020-031 S.P. 019-605-028 | STATE PROJ. NO. 1901-148 (TH 13) SHEET NO. X49 OF X137 SHEETS

DISTRICT *: METRO
IPLOT NAME: d1901148_th13_xpl39
PATH & FILENAME: P:\Projects\DM_ROS\013\1901\148\Design\XS\d1901148_th13_xpl.dgn
PLOTTED/REVISED: 11-JUN-2012 07:12

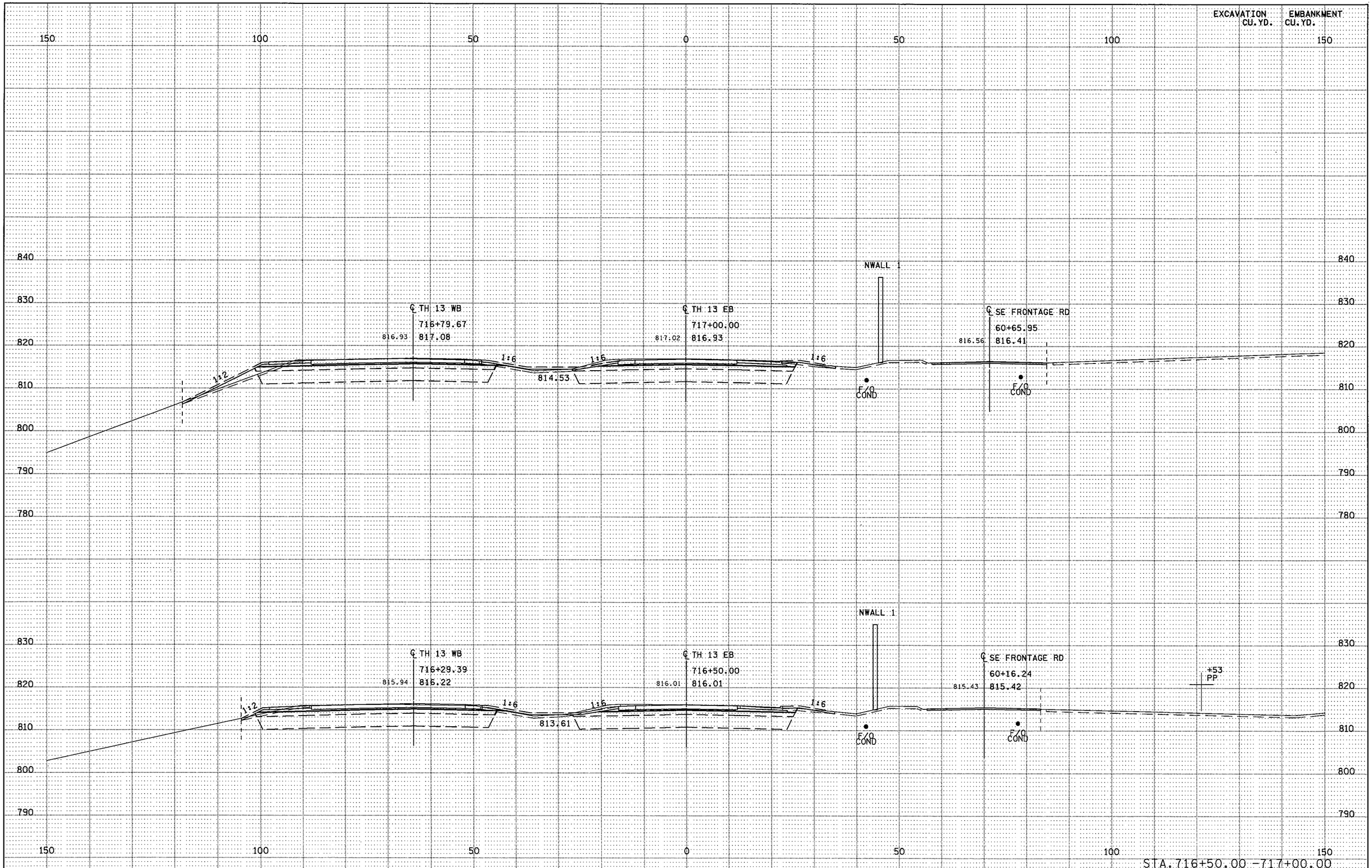

S.P. 179-020-031 S.P. 019-605-028 | STATE PROJ. NO. 1901-148 (TH 13) SHEET NO. X50 OF X137 SHEETS

PLOTTED/REVISED: 11-JUN-2012 07:13

DISTRICT # : METRO
IPLOT NAME: d190i148_th13_xpl40
PATH & FILENAME: Projects/DM_ROS/013/190i/148/Design/XS/d190i148_th13_xpl.dgn

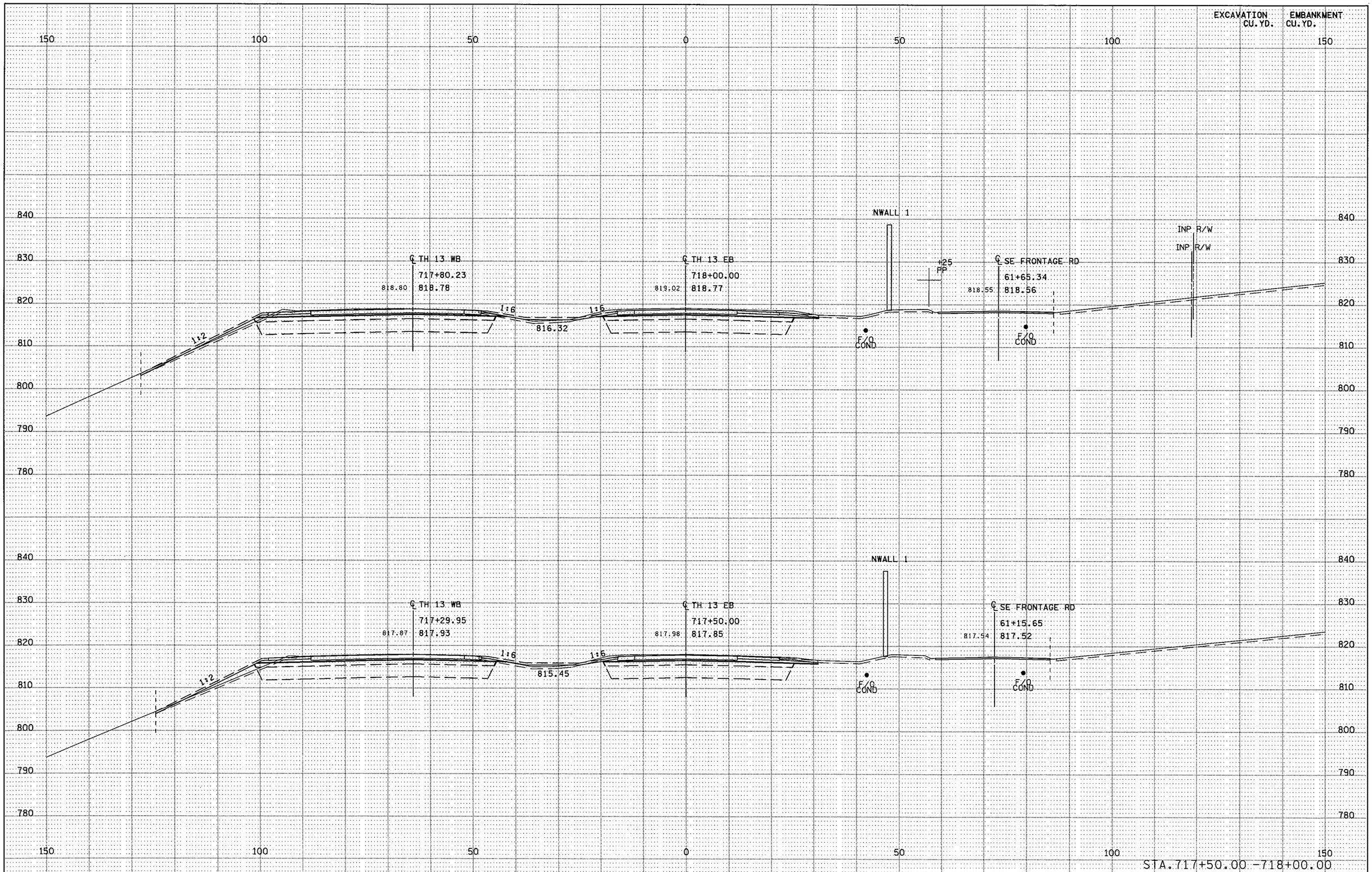

PLOTTED/REVISED: 11-JUN-2012 07:19

DISTRICT #: METRO
IPLOT NAME: d1901148_th13_xpl49
PATH & FILENAME: Projects/DM_ROS/013/1901/148/Design/XS/d1901148_th13_xpl.dgn

S.P. 179-020-031 S.P. 019-605-028

STATE PROJ. NO. 1901-148 (TH 13) SHEET NO. X51 OF X137 SHEETS

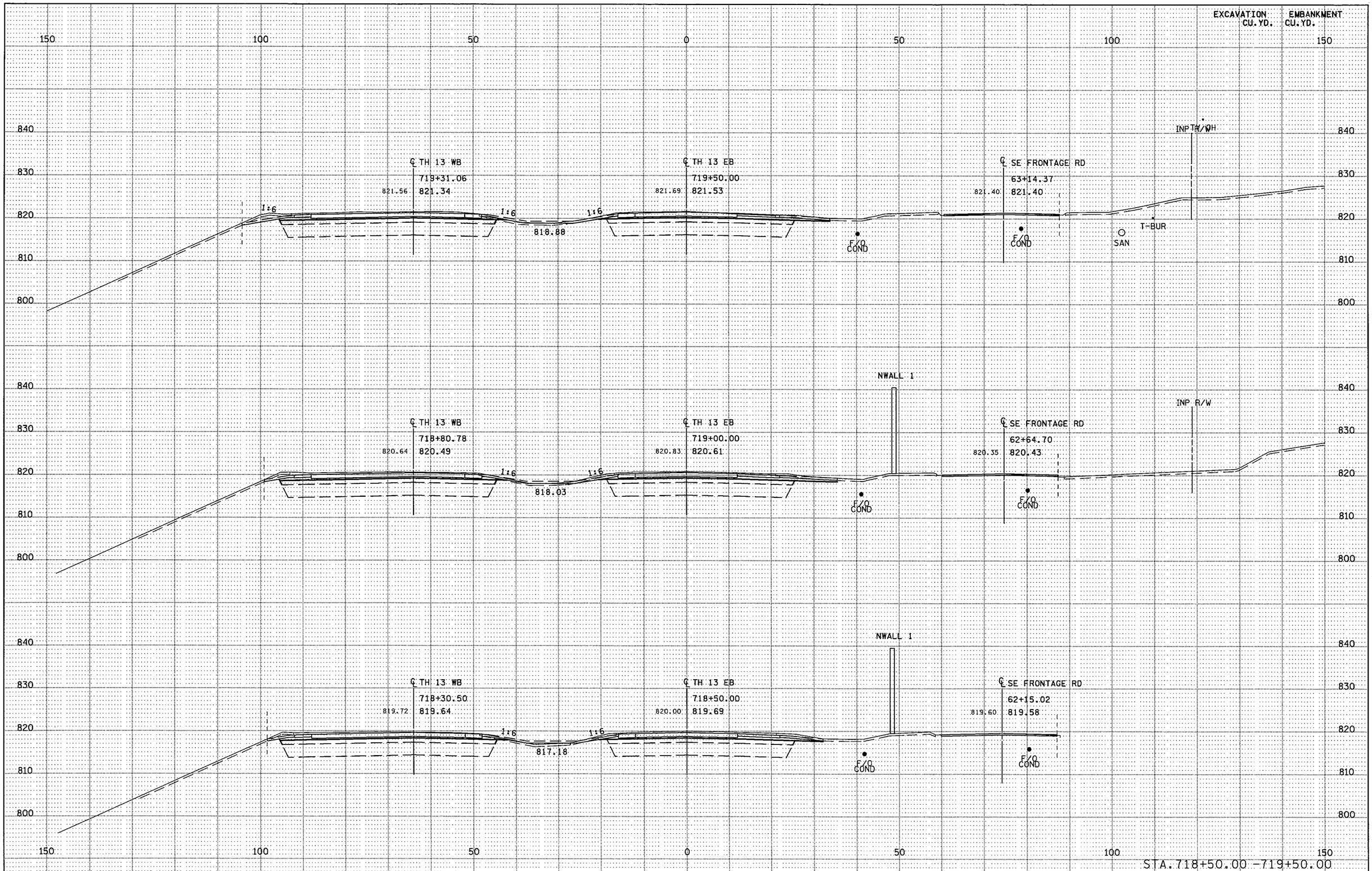

S.P. 179-020-031 S.P. 019-605-028 | STATE PROJ. NO. 1901-148 (TH 13) SHEET NO. X52 OF X137 SHEETS

PLOTTED/REVISED: 11-JUN-2012 07:18

DISTRICT *: METRO
IPLOT NAME: d1901148_th13_xpl41
PATH & FILENAME: Projects/DM_ROS/013/1901/148/Design/XS/d1901148_th13_xpl.dgn

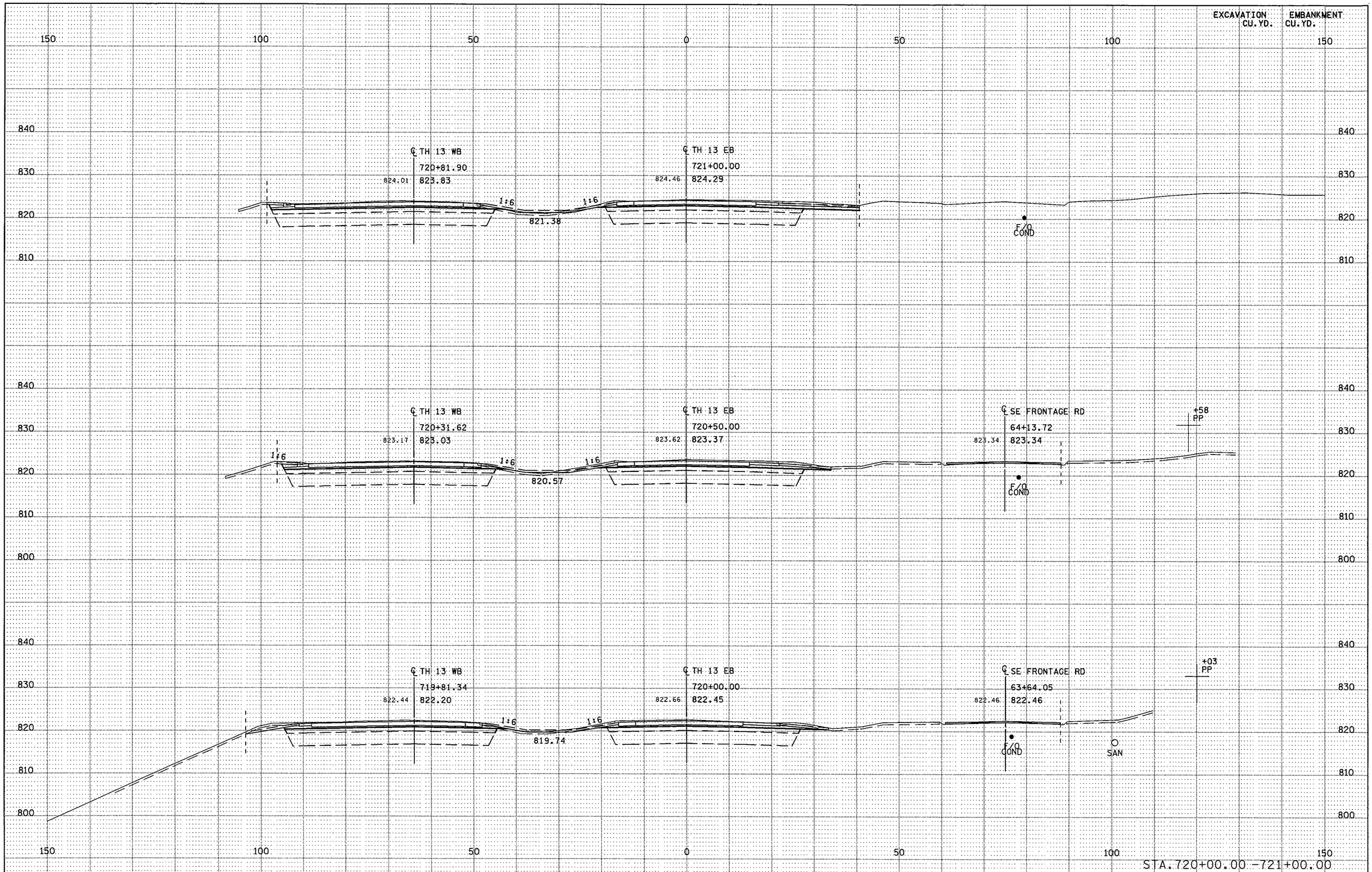

S.P. 179-020-031 S.P. 019-605-028 | STATE PROJ. NO. 1901-148 (TH 13) SHEET NO. X53 OF X137 SHEETS

PLOTTED/REVISED: 11-JUN-2012 07:18

DISTRICT *: METRO
IPLOT NAME: d190l148_th13_xpl42
PATH & FILENAME: Projects/DM_ROS/013/190l/148/Design/XS/d190l148_th13_xpl.dgn

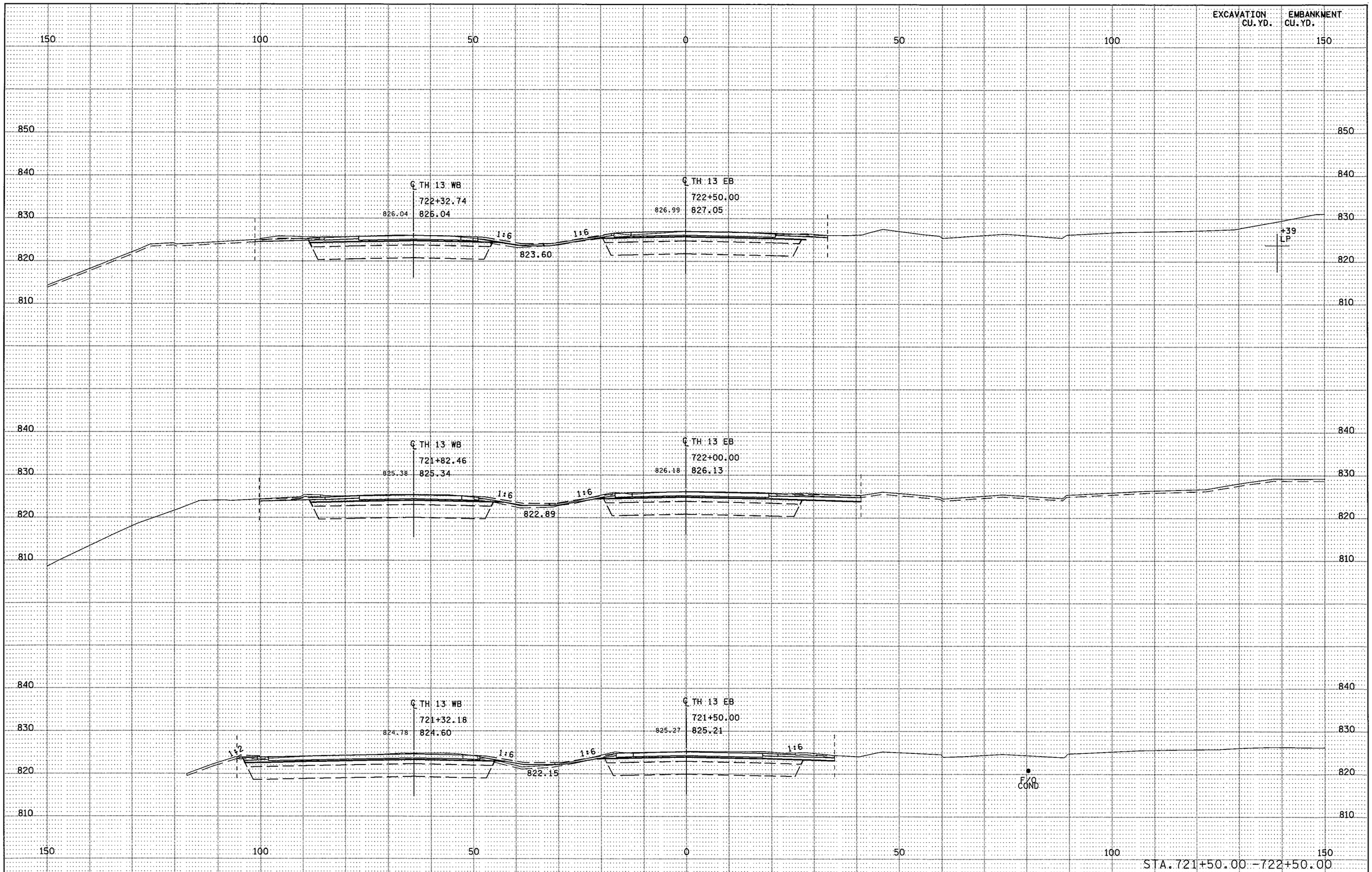

S.P. 179-020-031 S.P. 019-605-028 | STATE PROJ. NO. 1901-148 (TH 13) SHEET NO. X54 OF X137 SHEETS

PLOTTED/REVISED: 11-JUN-2012 07:18

DISTRICT # : METRO
IPLOT NAME: d190l148_th13_xpl43
PATH & FILENAME: Projects/DM_ROS/013/190l/148/Design/XS/d190l148_th13_xpl.dgn

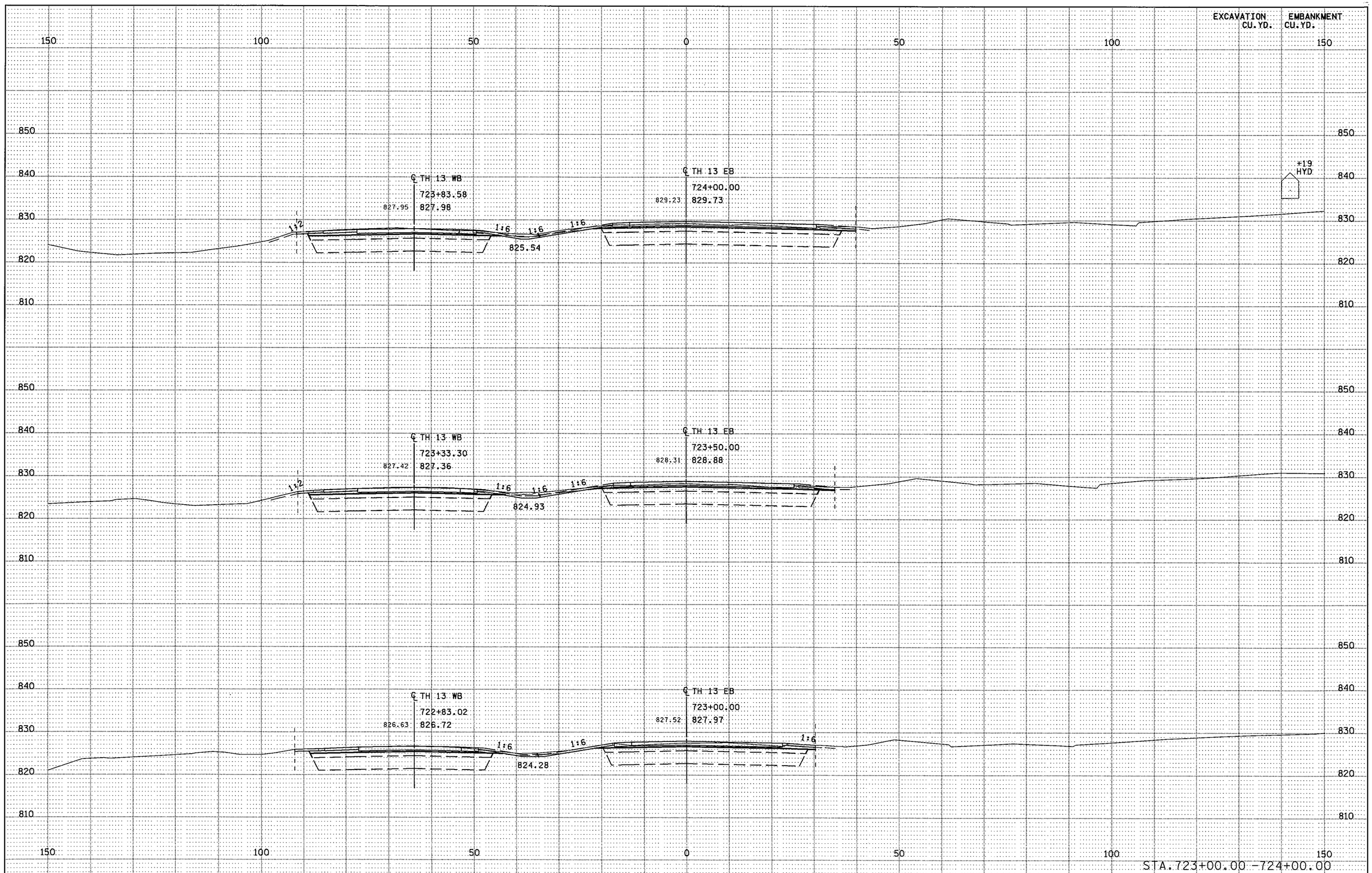

S.P. 179-020-031 S.P. 019-605-028

STATE PROJ. NO. 1901-148 (TH 13) SHEET NO. X55 OF X137 SHEETS

PLOTTED/REVISED: 11-JUN-2012 07:18

DISTRICT #: METRO
IPLOT NAME: d190l148_th13_xpl44
PATH & FILENAME: Projects/DM_ROS/013/190l/148/Design/XS/d190l148_th13_xpl.dgn

PLOTTED/REVISED: 11-JUN-2012 07:20

DISTRICT * : METRO
IPLOT NAME: d1901148_th3conn_xpl
PATH & FILENAME: Projects/DM_ROS/013/1901/148/Design/XS/d1901148_th3conn_xpl.dgn

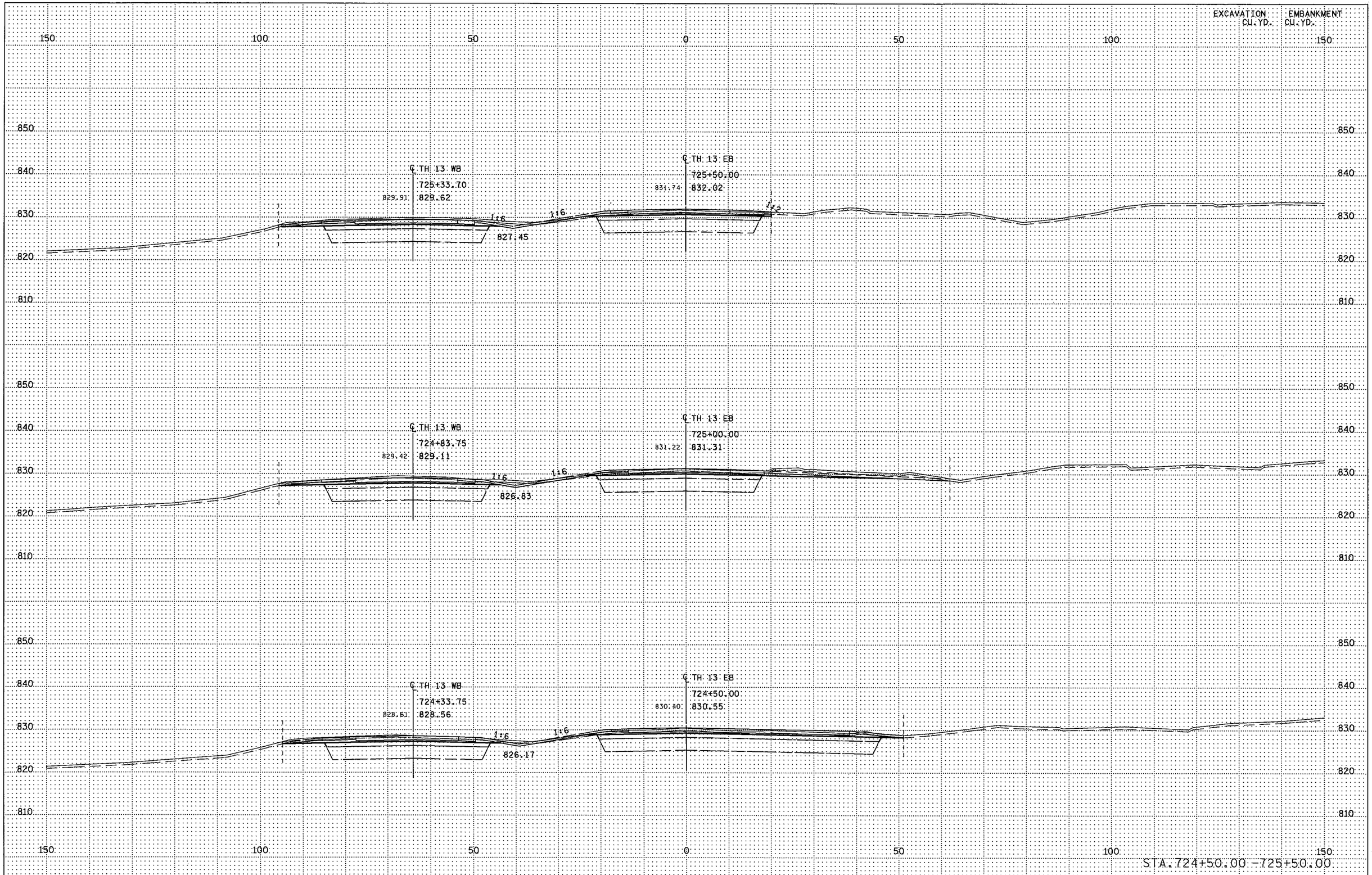

S.P. 179-020-031 S.P. 019-605-028 | STATE PROJ. NO. 1901-148 (TH 13) SHEET NO. X56 OF X137 SHEETS

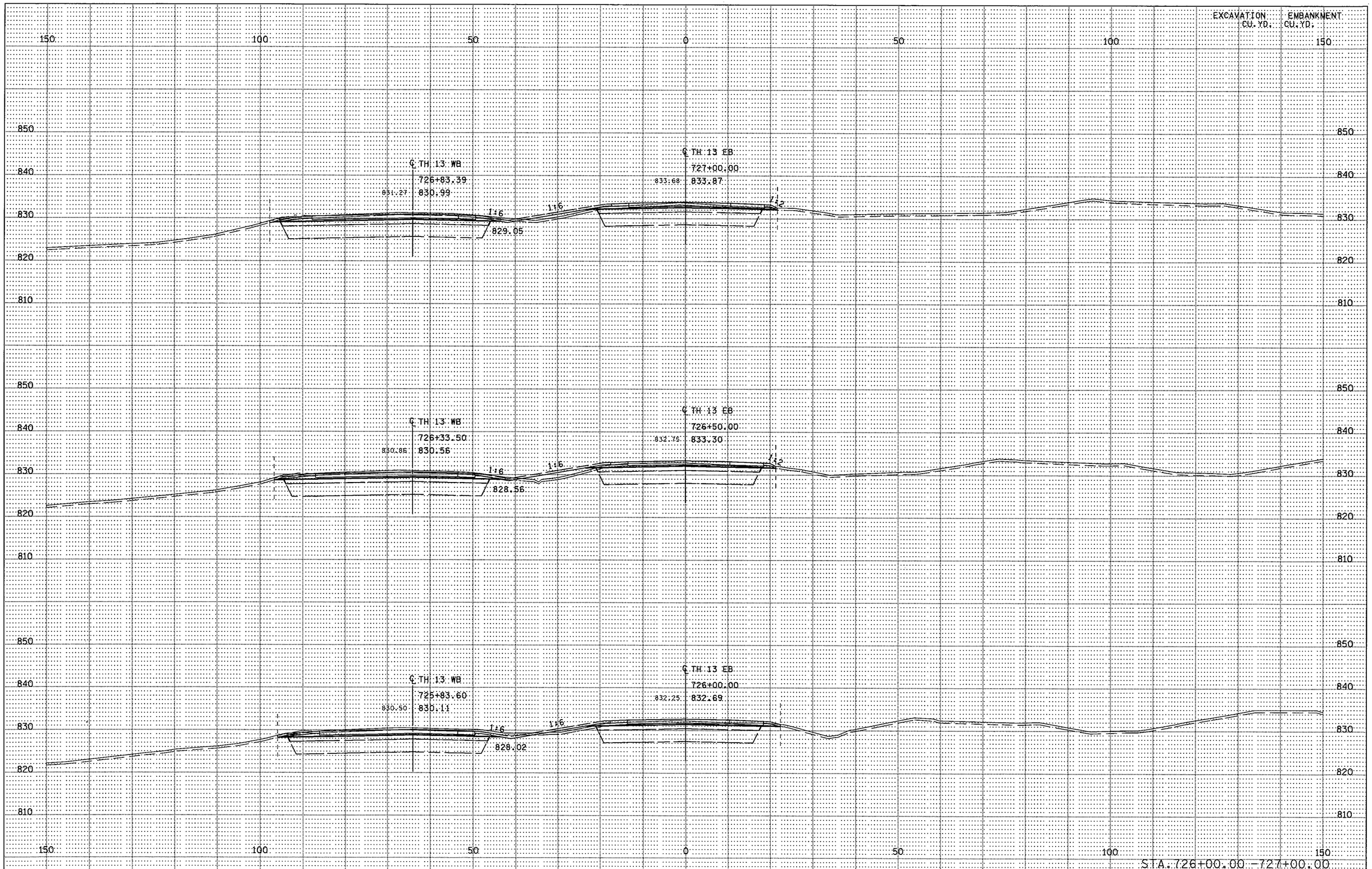

PLOTTED/REVISED: 11-JUN-2012 07:20

DISTRICT * : METRO
IPLOT NAME: d1901148_th13conn_xpll
PATH & FILENAME: Projects/DM_ROS/013/1901/148/Design/XS/d1901148_th13conn_xpl.dgn

S.P. 179-020-031 S.P. 019-605-028 | STATE PROJ. NO. 1901-148 (TH 13) SHEET NO. X57 OF X137 SHEETS

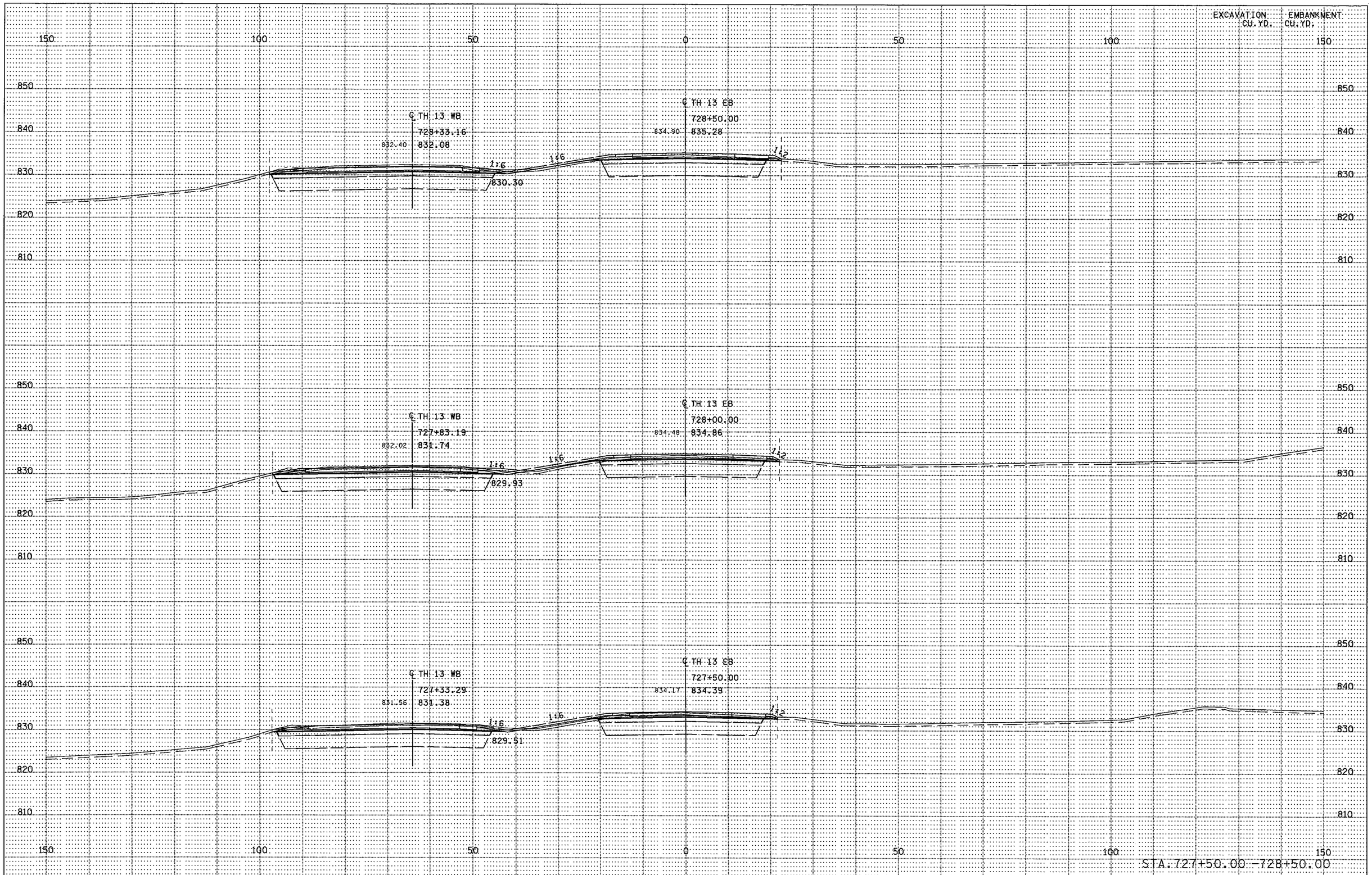

S.P. 179-020-031 S.P. 019-605-028 | STATE PROJ. NO. 1901-148 (TH 13) SHEET NO. X58 OF X137 SHEETS

DISTRICT *: METRO
IPLOT NAME: d190l148_th3conn_xpl2
PATH & FILENAME: Projects/DM_ROS/013/190l/148/Design/XS/d190l148_th3conn_xpl.dgn
PLOTTED/REVISED: 11-JUN-2012 07:20

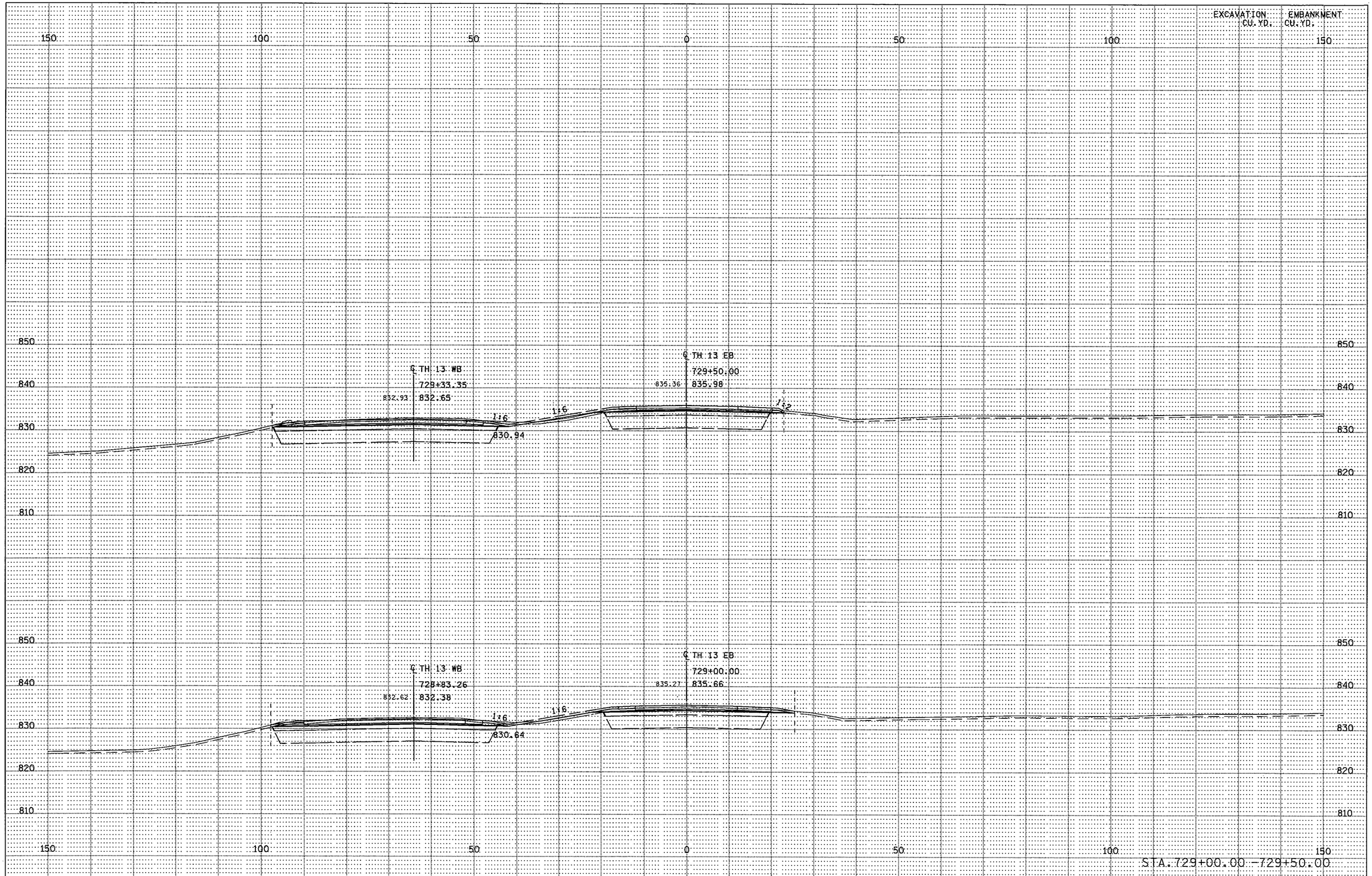

DISTRICT * : METRO
IPLOT NAME: d1901148_th13conn_xpl3
PATH & FILENAME: Projects/DM_ROS/013/1901/148/Design/XS/d1901148_th13conn_xpl.dgn
PLOTTED/REVISED: 11-JUN-2012 07:20

S.P. 179-020-031 S.P. 019-605-028 | STATE PROJ. NO. 1901-148 (TH 13) SHEET NO. X59 OF X137 SHEETS

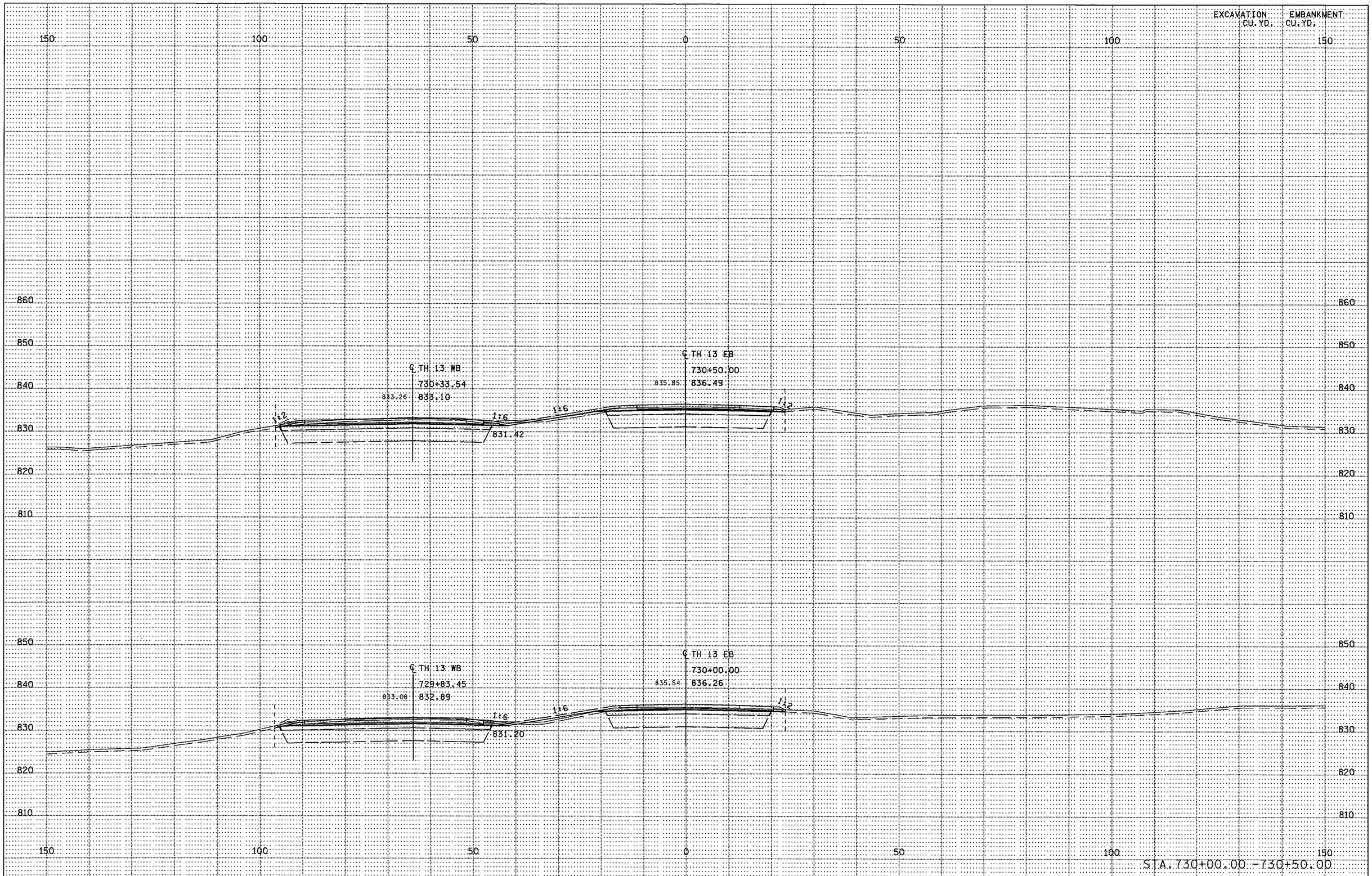

DISTRICT * : METRO
IPLOT NAME: d1901148_th13conn_xpl4
PATH & FILENAME: Projects/DM_ROS/013/1901/148/Design/XS/d1901148_th13conn_xpl.dgn
PLOTTED/REVISED: 11-JUN-2012 07:20

S.P. 179-020-031 S.P. 019-605-028 | STATE PROJ. NO. 1901-148 (TH 13) SHEET NO. X60 OF X137 SHEETS

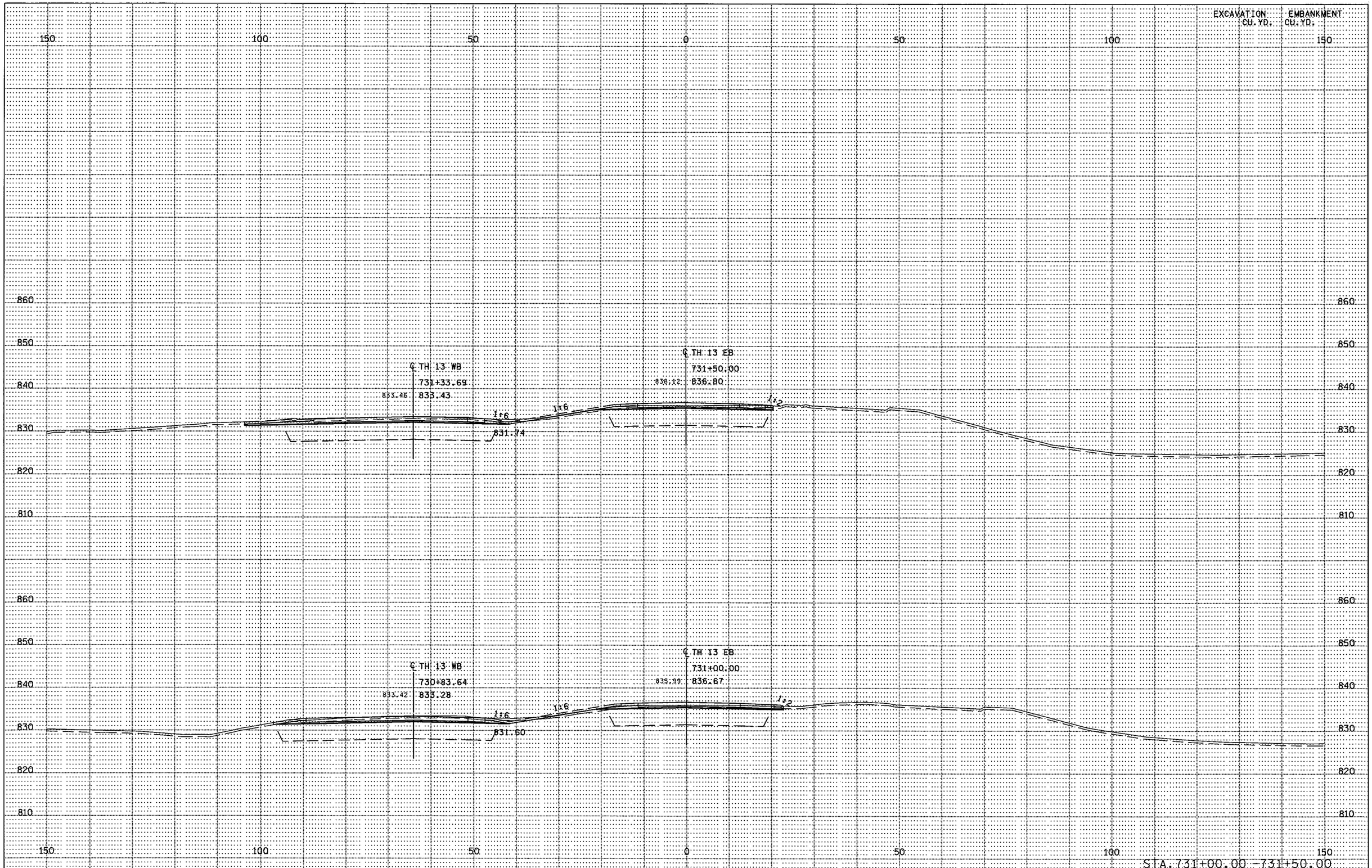

S.P. 179-020-031 S.P. 019-605-028 | STATE PROJ. NO. 1901-148 (TH 13) SHEET NO. X61 OF X137 SHEETS

DISTRICT * : METRO
IPLOT NAME: d1901148_th13conn_xp6
PATH & FILENAME: Projects/DM_ROS/013/1901/148/Design/XS/d1901148_th13conn_xpl.dgn
PLOTTED/REVISED: 15-JUN-2012 10:42

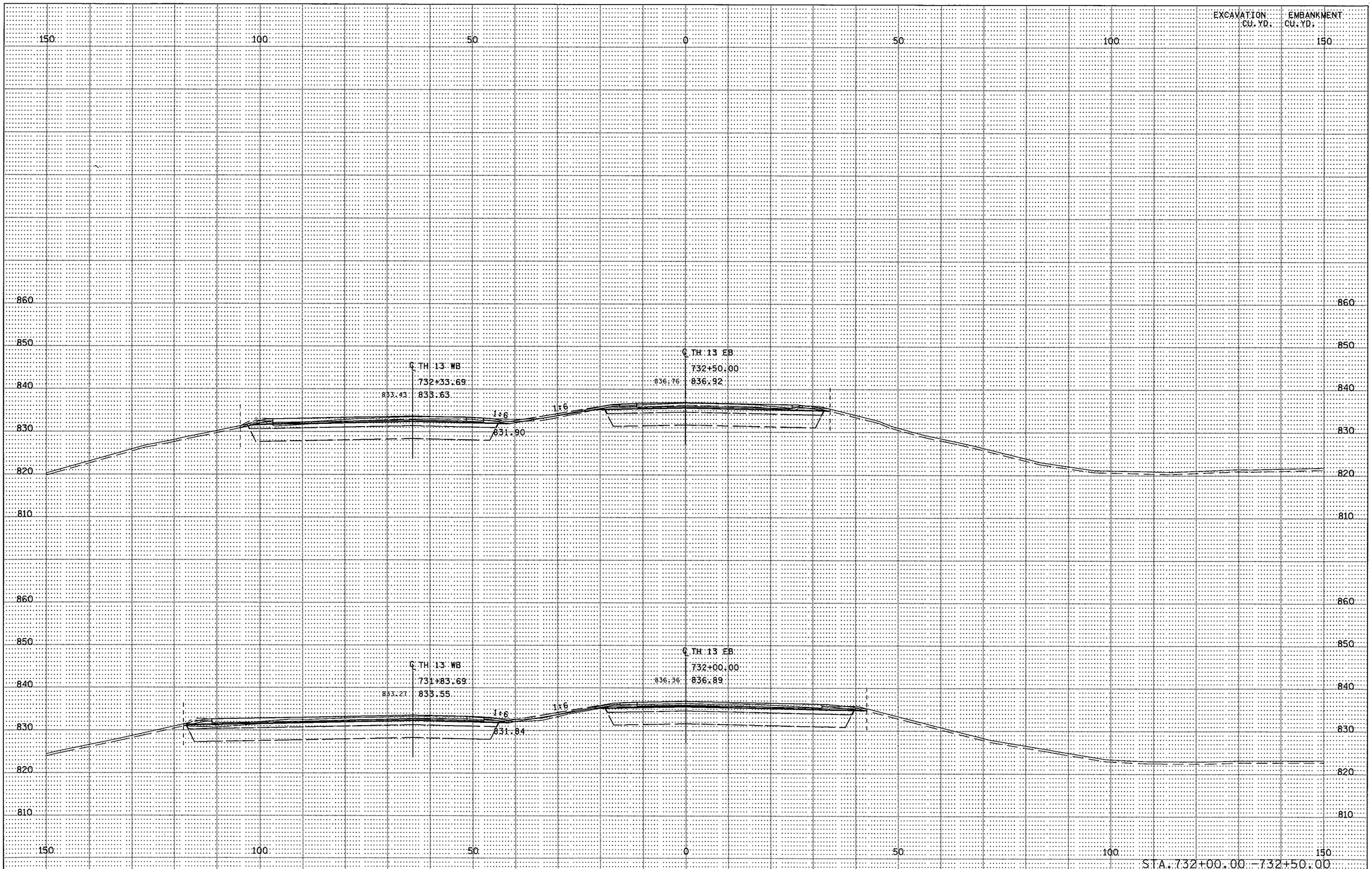

S.P. 179-020-031 S.P. 019-605-028 | STATE PROJ. NO. 1901-148 (TH 13) SHEET NO. X62 OF X137 SHEETS

DISTRICT *: METRO
IPLOT NAME: d1901148_th13conn_xpl6
PATH & FILENAME: Projects/DM_ROS/013/1901/148/Design/XS/d1901148_th13conn_xpl.dgn
PLOTTED/REVISED: 11-JUN-2012 07:21

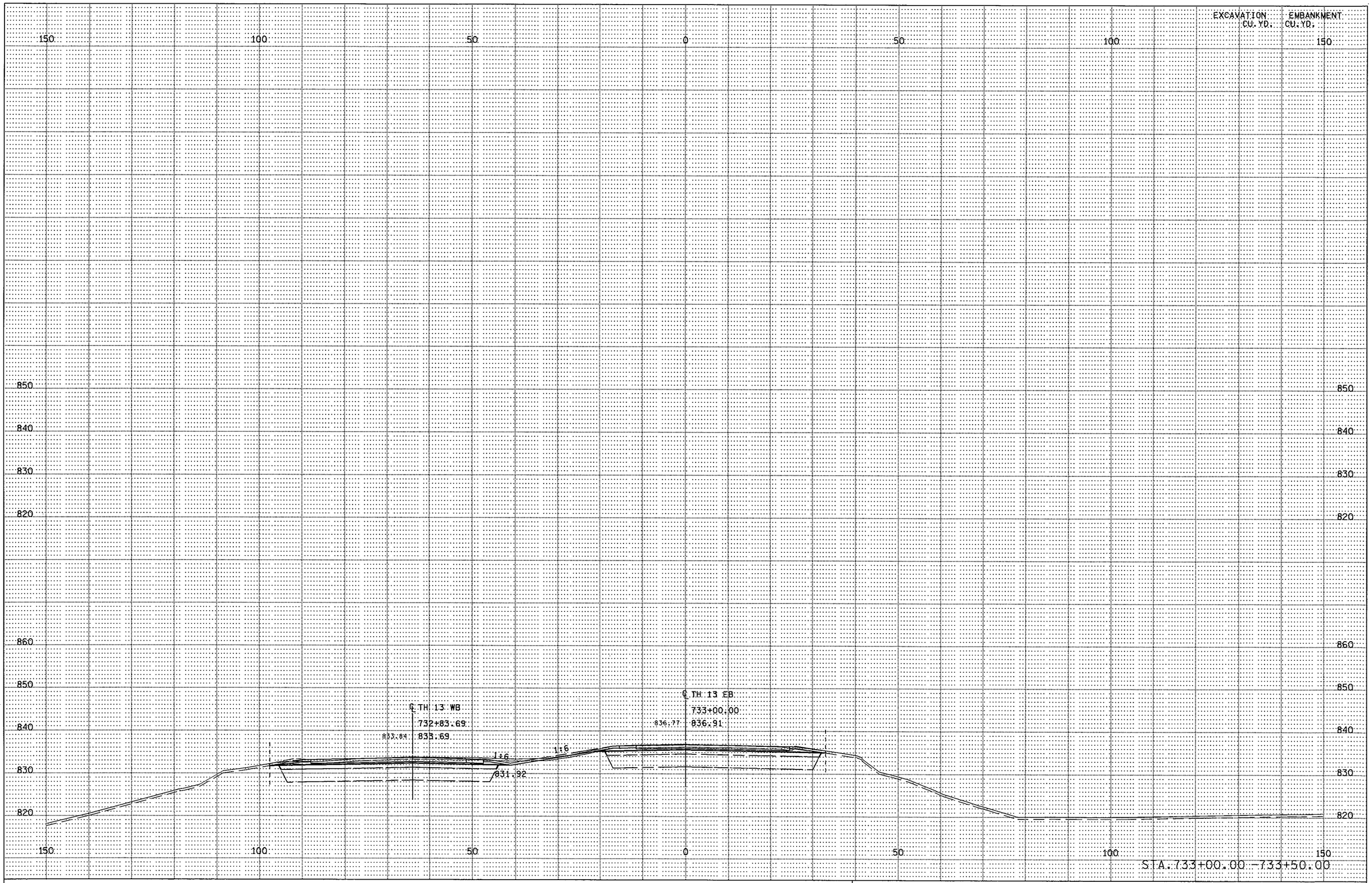

S.P. 179-020-031 S.P. 019-605-028

STATE PROJ. NO. 1901-148 (TH 13) SHEET NO. X63 OF X137 SHEETS

DISTRICT #: METRO
IPLOT NAME: d1901148_th13conn_xp17
PATH & FILENAME: Projects/DM_ROS/013/1901/148/Design/XS/d1901148_th13conn_xpl.dgn

PLOTTED/REVISED: 11-JUN-2012 07:21

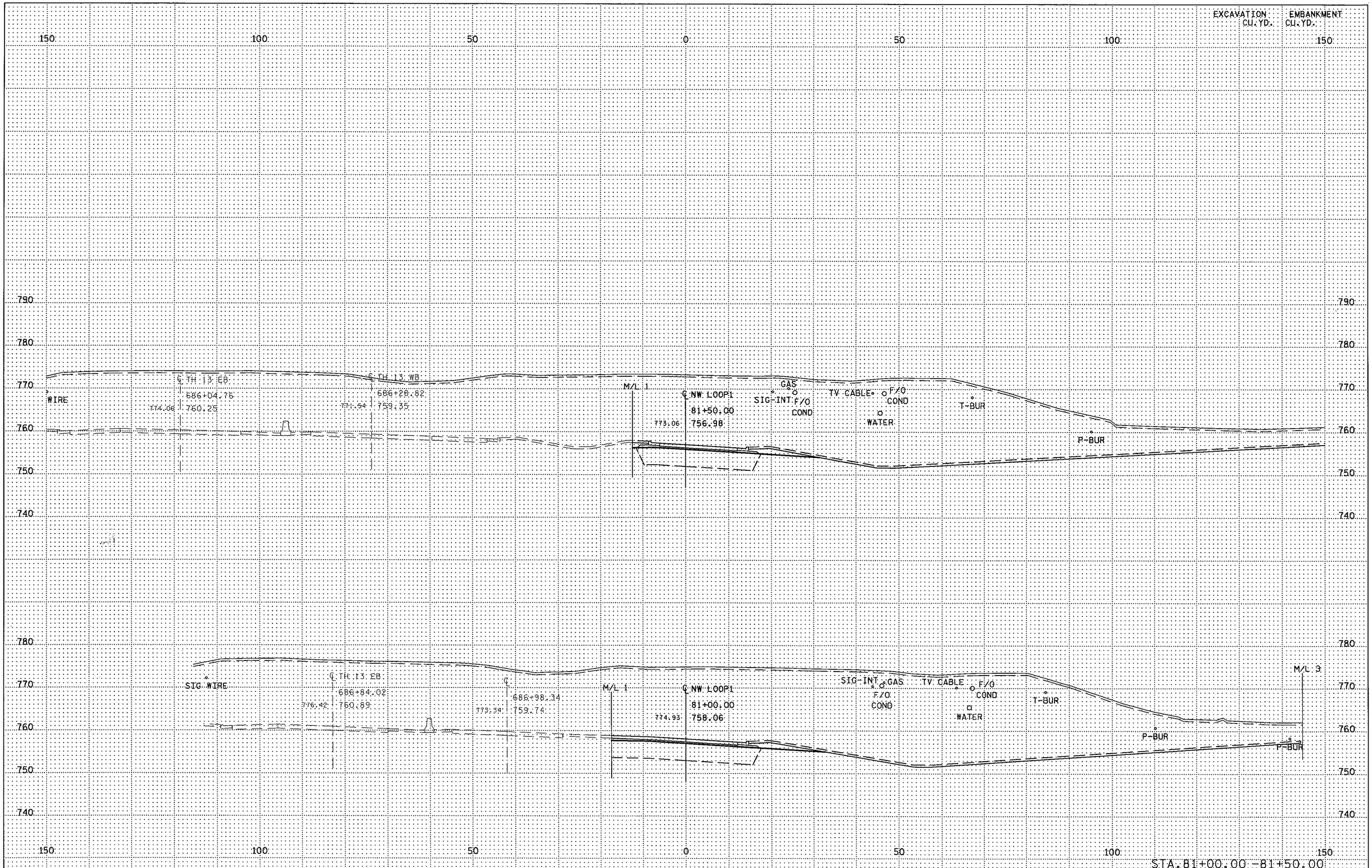

S.P. 179-020-031 S.P. 019-605-028 | STATE PROJ. NO. 1901-148 (TH 13) SHEET NO. X64 OF X137 SHEETS

DISTRICT *: METRO
IPLOT NAME: d1901148_nwloop_xpl
PATH & FILENAME: Projects/DM_ROS/013/1901/148/Design/XS/d1901148_nwloop_xpl.dgn
PLOTTED/REVISED: 11-JUN-2012 07:23

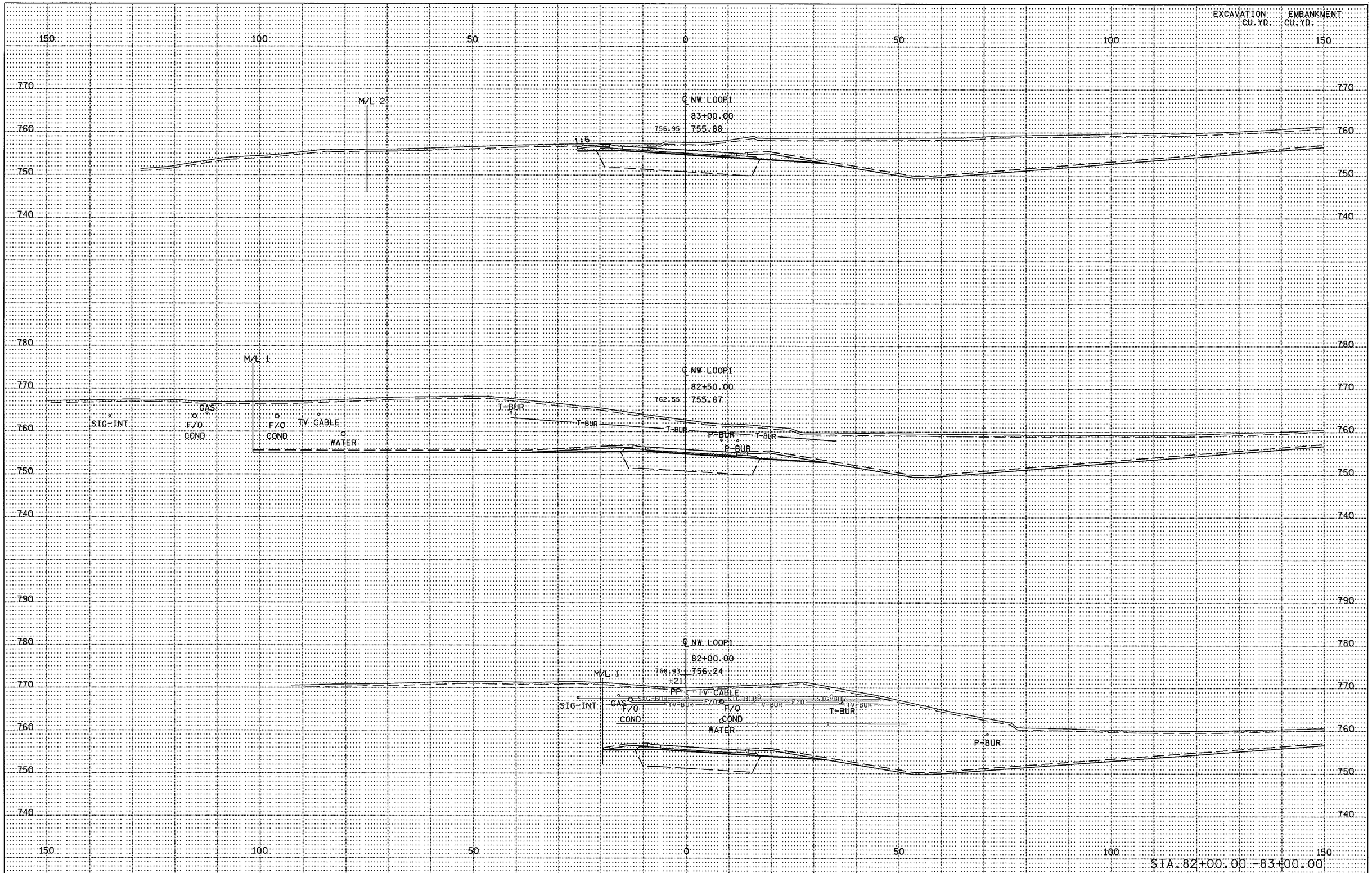

S.P. 179-020-031 S.P. 019-605-028 | STATE PROJ. NO. 1901-148 (TH 13) SHEET NO. X65 OF X137 SHEETS

DISTRICT *: METRO
IPLOT NAME: d1901148_nwloop_xpl
PATH & FILENAME: Projects/DM_ROS/013/1901/148/Design/XS/d1901148_nwloop_xpl.dgn
PLOTTED/REVISED: 11-JUN-2012 07:23

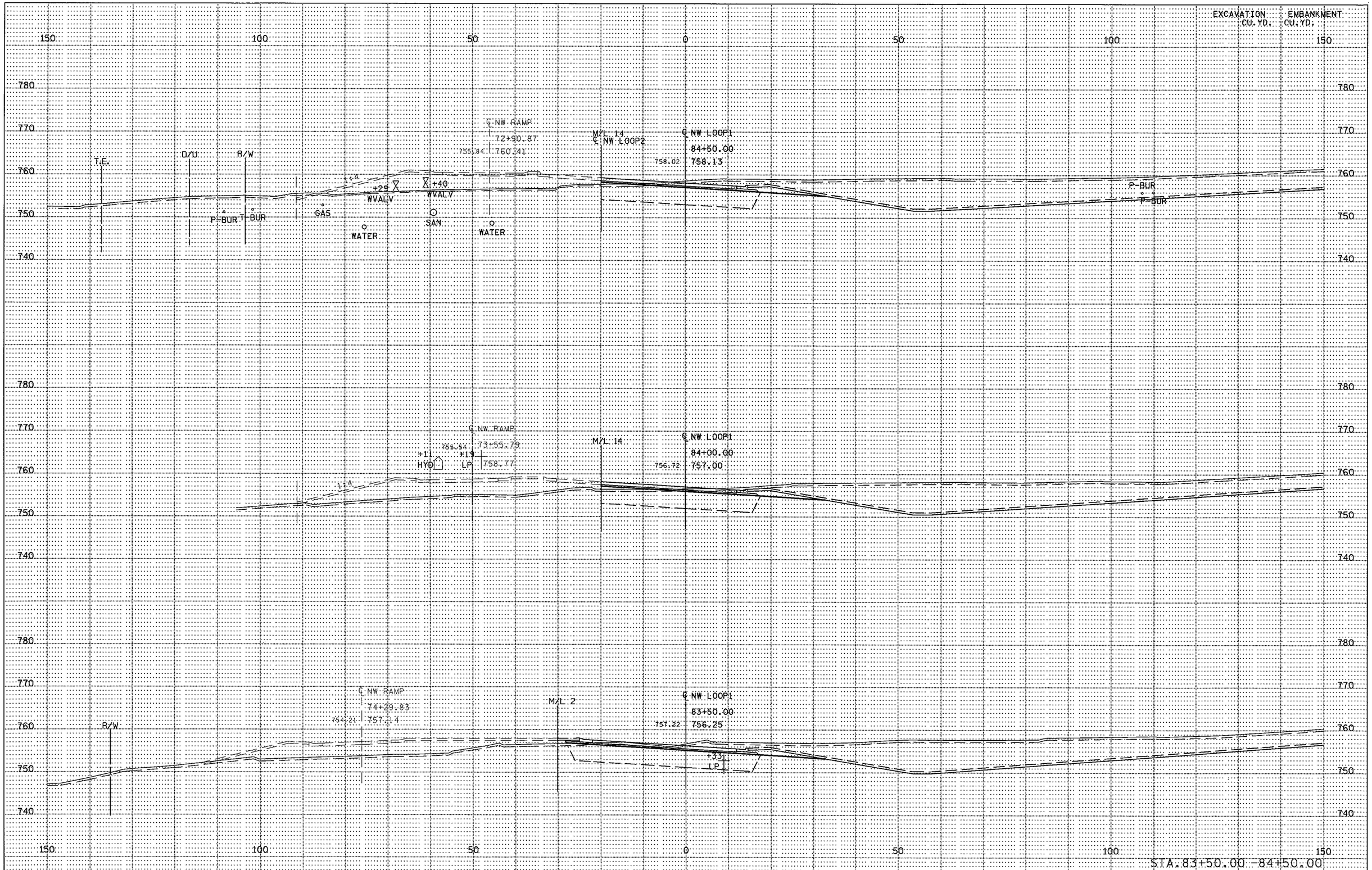

S.P. 179-020-031 S.P. 019-605-028 | STATE PROJ. NO. 1901-148 (TH 13) SHEET NO. X66 OF X137 SHEETS

DISTRICT *: METRO
IPLOT NAME: d1901148_nwloop_xpl2
PATH & FILENAME: Projects/DM_ROS/013/1901/148/Design/XS/d1901148_nwloop_xpl.dgn
PLOTTED/REVISED: 11-JUN-2012 07:23

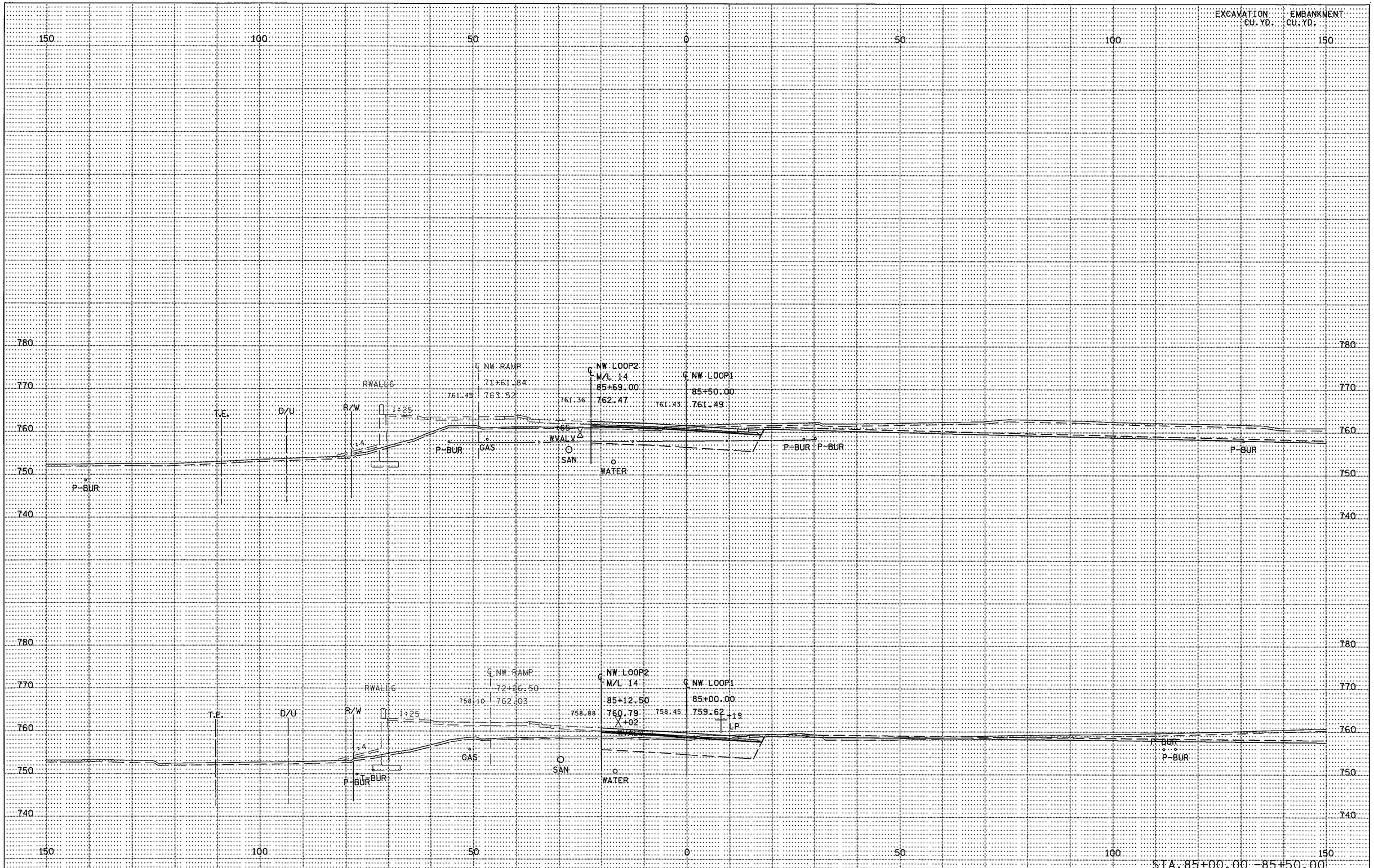

S.P. 179-020-031 S.P. 019-605-028 | STATE PROJ. NO. 1901-148 (TH 13) SHEET NO. X67 OF X137 SHEETS

DISTRICT * : METRO
IPLOT NAME: d1901148_nwloop_xpl3
PATH & FILENAME: Projects/DM_ROS/013/1901/148/Design/XS/d1901148_nwloop_xpl.dgn
PLOTTED/REVISED: 11-JUN-2012 07:23

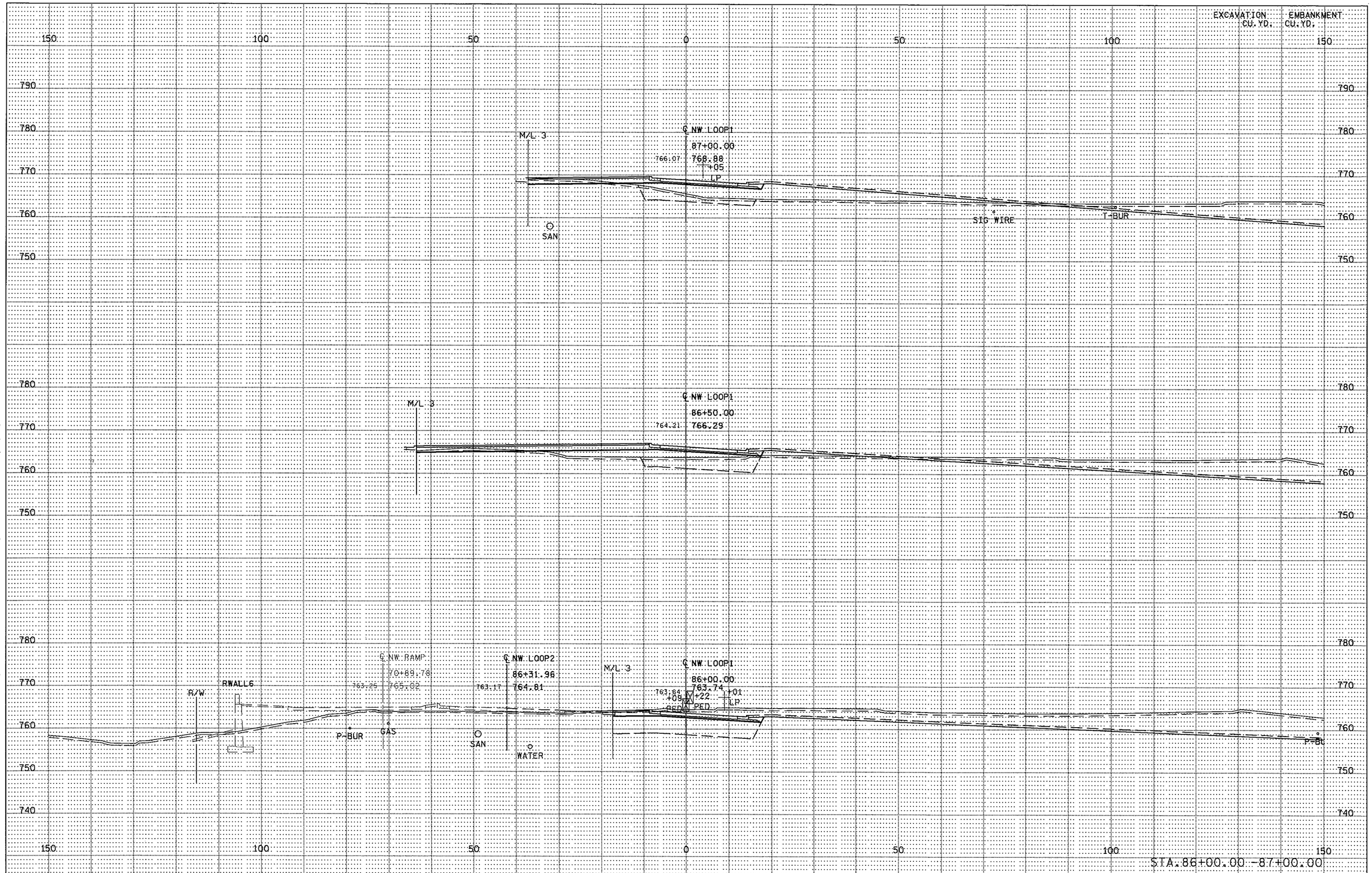

S.P. 179-020-031 S.P. 019-605-028 | STATE PROJ. NO. 1901-148 (TH 13) SHEET NO. X68 OF X137 SHEETS

DISTRICT *: METRO
IPLOT NAME: d190148_nwloop_xpl4
PATH & FILENAME: Projects/DM_ROS/013/190148/Design/XS/d190148_nwloop_xpl.dgn
PLOTTED/REVISED: 11-JUN-2012 07:23

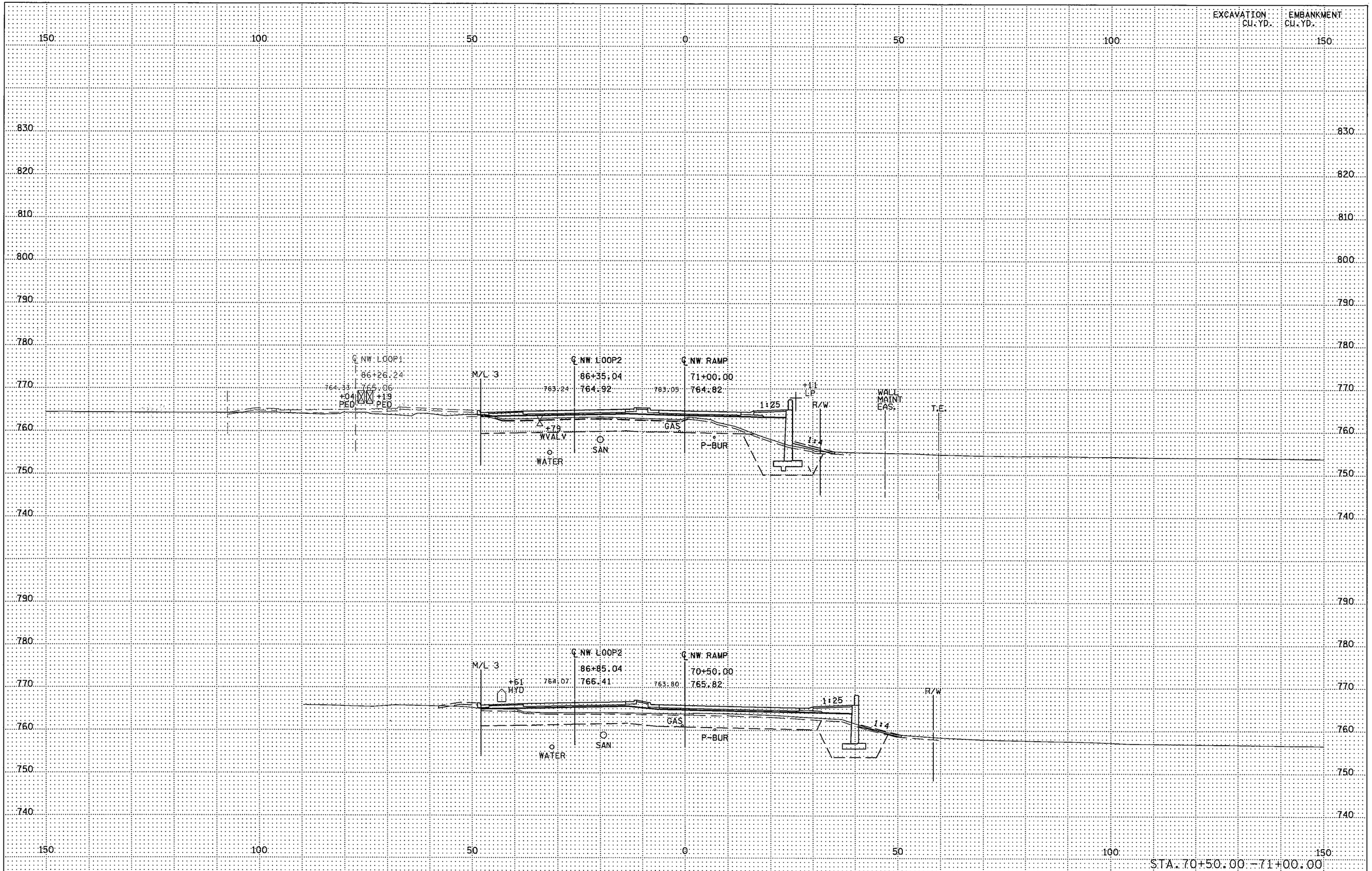

S.P. 179-020-031 S.P. 019-605-028 | STATE PROJ. NO. 1901-148 (TH 13) SHEET NO. X69 OF X137 SHEETS

DISTRICT * : METRO
IPLOT NAME: d1901148_nwramp_xpl
PATH & FILENAME: Projects/DM_ROS/013/1901/148/Design/XS/d1901148_nwramp_xpl.dgn
PLOTTED/REVISED: 11-JUN-2012 07:25

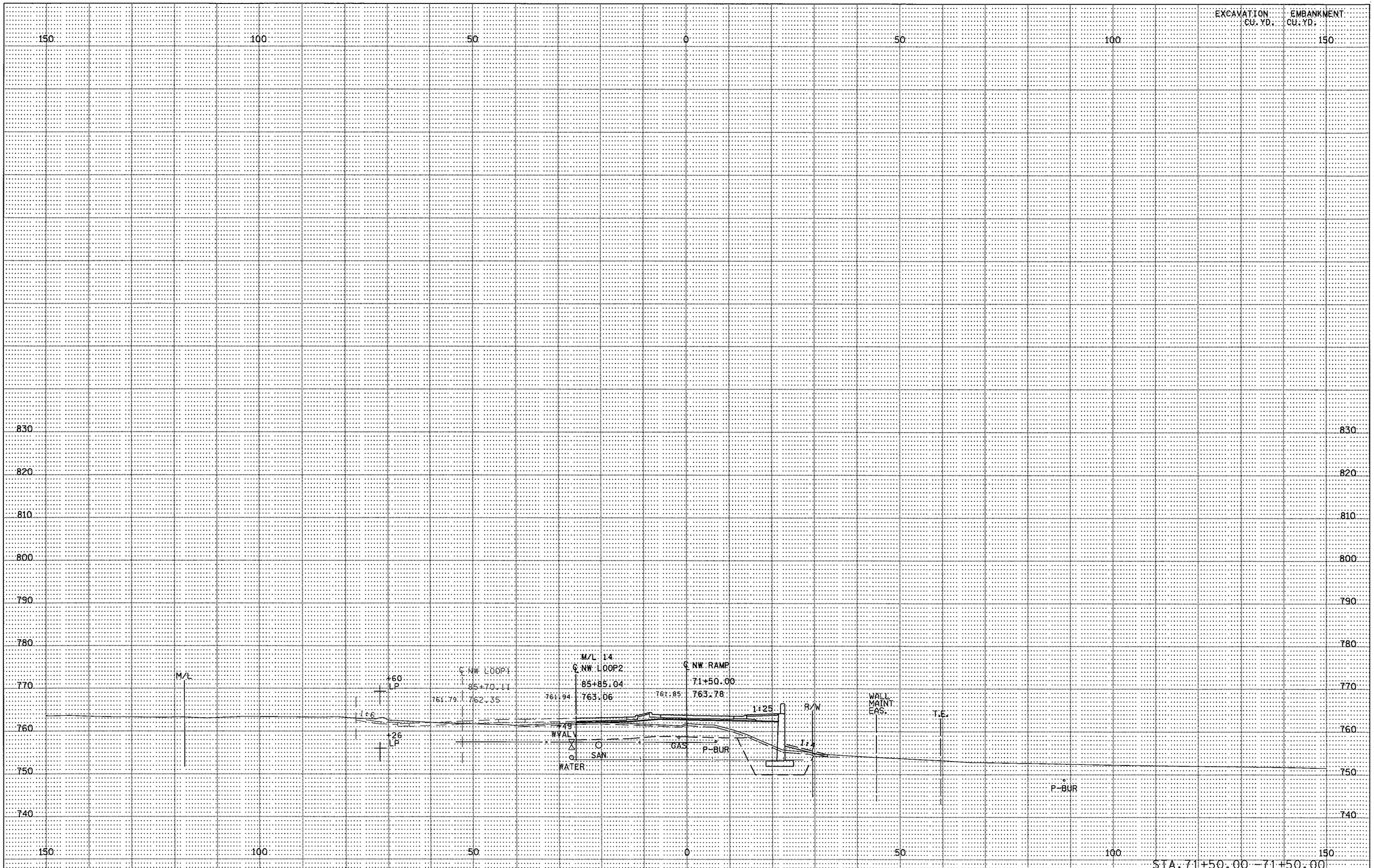

S.P. 179-020-031 S.P. 019-605-028 | STATE PROJ. NO. 1901-148 (TH 13) SHEET NO. X70 OF X137 SHEETS

DISTRICT * : METRO
IPLOT NAME: d1901148_nwramp_xpll
PATH & FILENAME: Projects/DM_ROS/013/1901/148/Design/XS/d1901148_nwramp_xpl.dgn
PLOTTED/REVISED: 11-JUN-2012 07:25

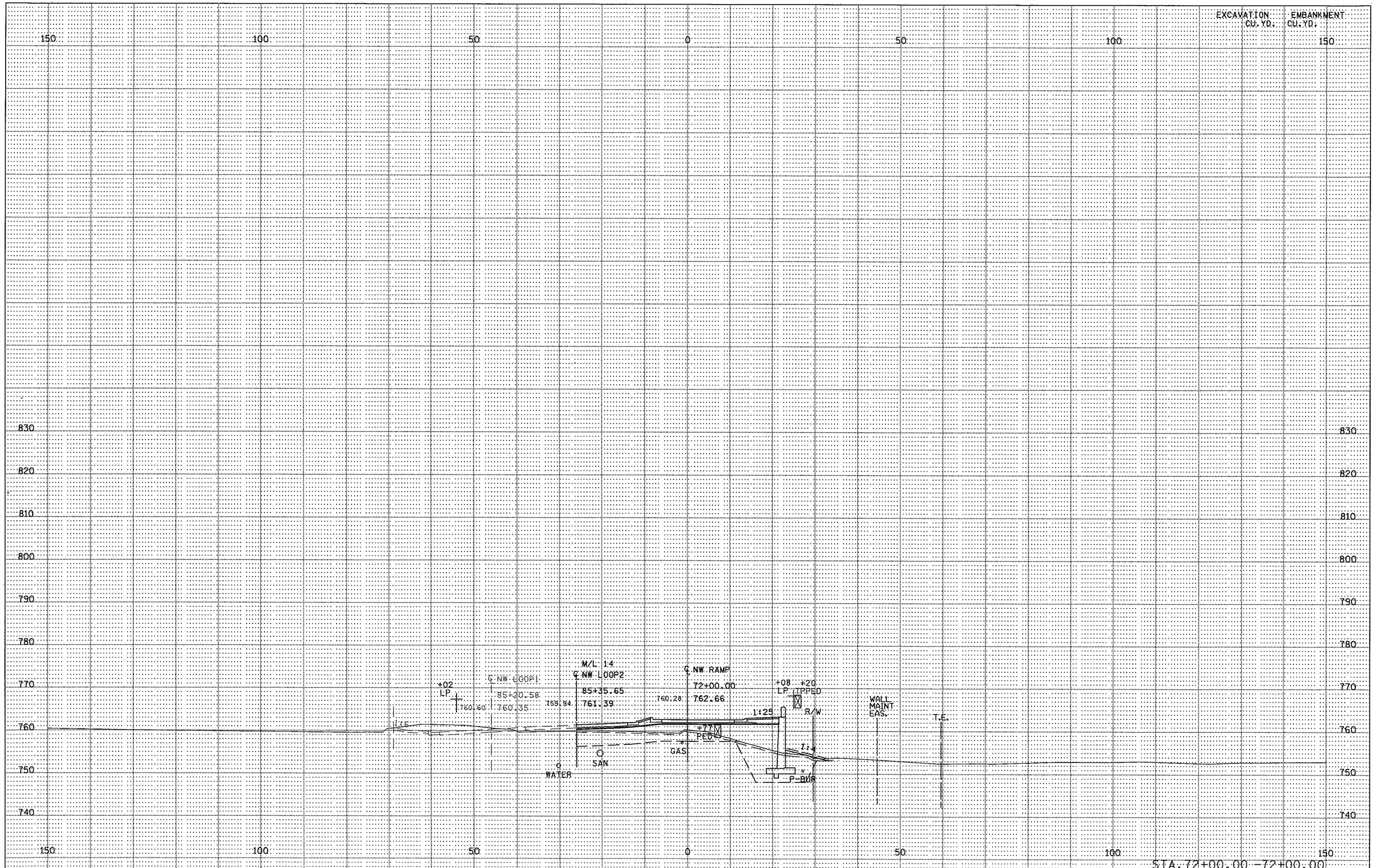

DISTRICT * : METRO
IPLOT NAME: d1901148_nwramp_xpl2
PATH & FILENAME: Projects/DM_ROS/013/1901/148/Design/XS/d1901148_nwramp_xpl.dgn
PLOTTED/REVISED: 11-JUN-2012 07:25

S.P. 179-020-031 S.P. 019-605-028 | STATE PROJ. NO. 1901-148 (TH 13) SHEET NO. X71 OF X137 SHEETS

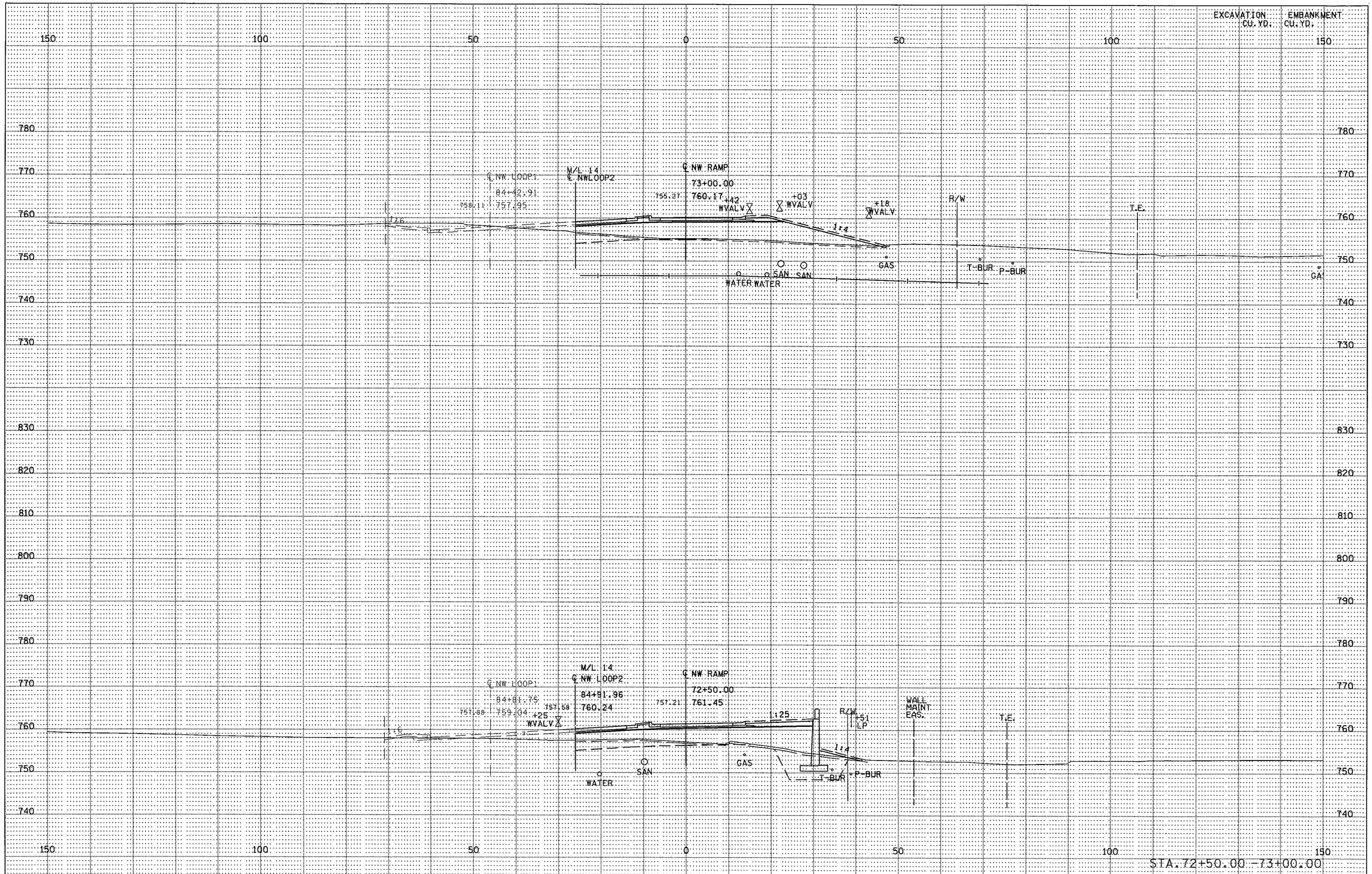

S.P. 179-020-031 S.P. 019-605-028 | STATE PROJ. NO. 1901-148 (TH 13) SHEET NO. X72 OF X137 SHEETS

DISTRICT *: METRO
IPLOT NAME: d1901148_nwramp_xpl3
PATH & FILENAME: Projects/DM_ROS/013/1901/148/Design/XS/d1901148_nwramp_xpl.dgn
PLOTTED/REVISED: 11-JUN-2012 07:25

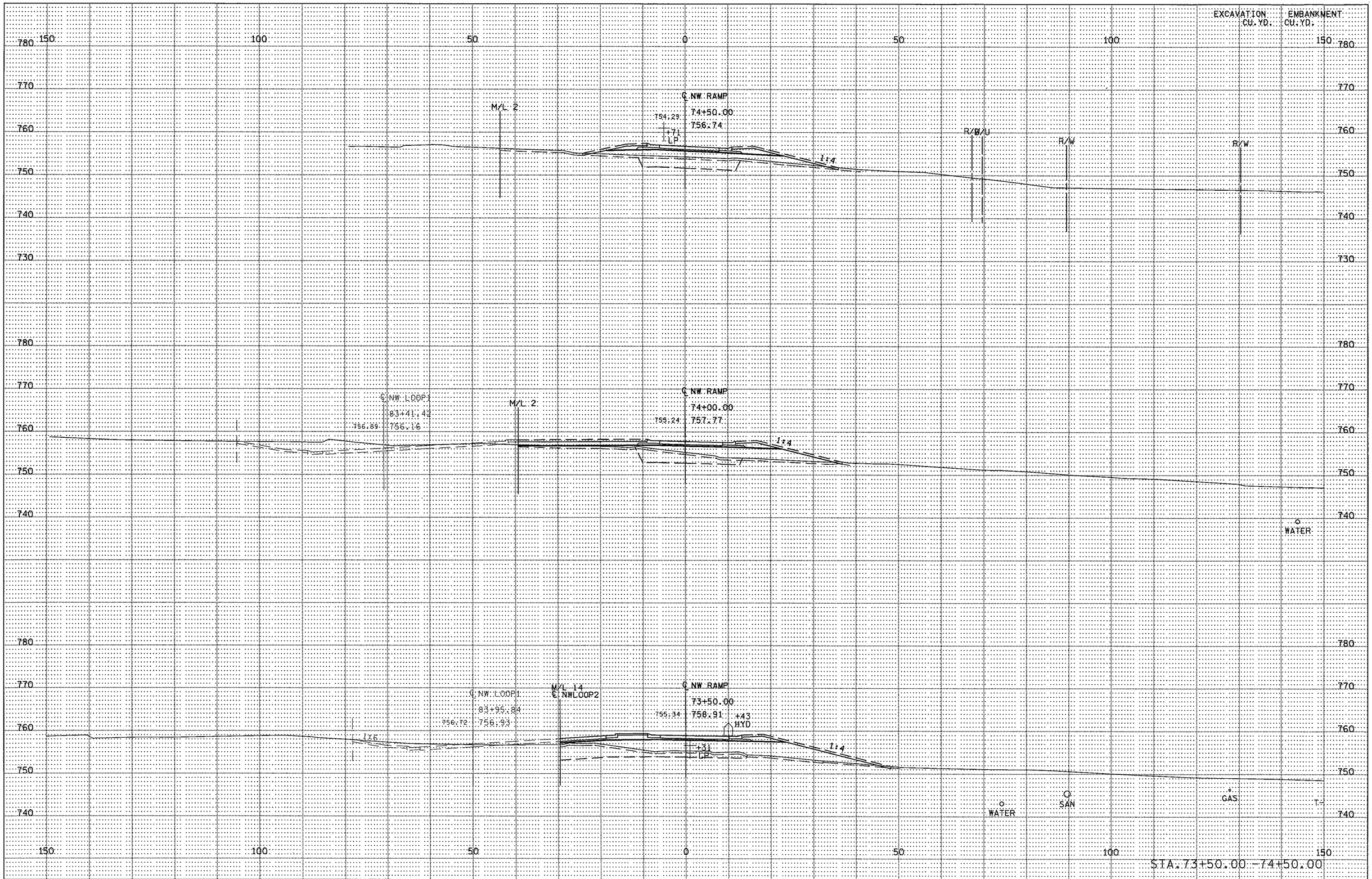

DISTRICT *: METRO
IPLOT NAME: d1901148_nwramp_xpl4
PATH & FILENAME: Projects/DM_ROS/013/1901/148/Design/XS/d1901148_nwramp_xpl.dgn
PLOTTED/REVISED: 11-JUN-2012 07:25

S.P. 179-020-031 S.P. 019-605-028 | STATE PROJ. NO. 1901-148 (TH 13) SHEET NO. X73 OF X137 SHEETS

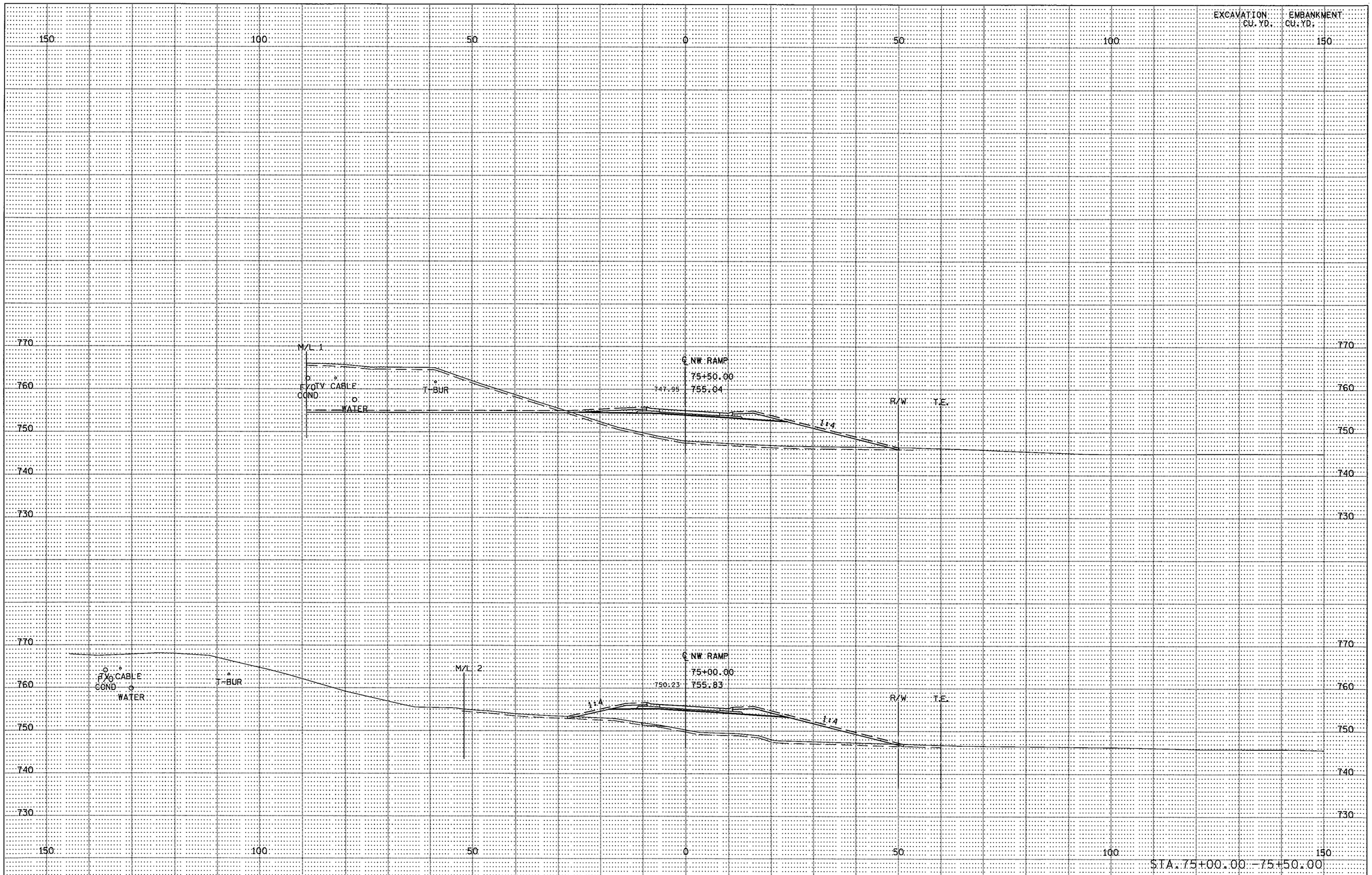

S.P. 179-020-031 S.P. 019-605-028 | STATE PROJ. NO. 1901-148 (TH 13) SHEET NO. X74 OF X137 SHEETS

DISTRICT *: METRO
IPLOT NAME: d1901148_nwramp_xpl5
PATH & FILENAME: Projects/DM_ROS/013/1901/148/Design/XS/d1901148_nwramp_xpl.dgn
PLOTTED/REVISED: 11-JUN-2012 07:25

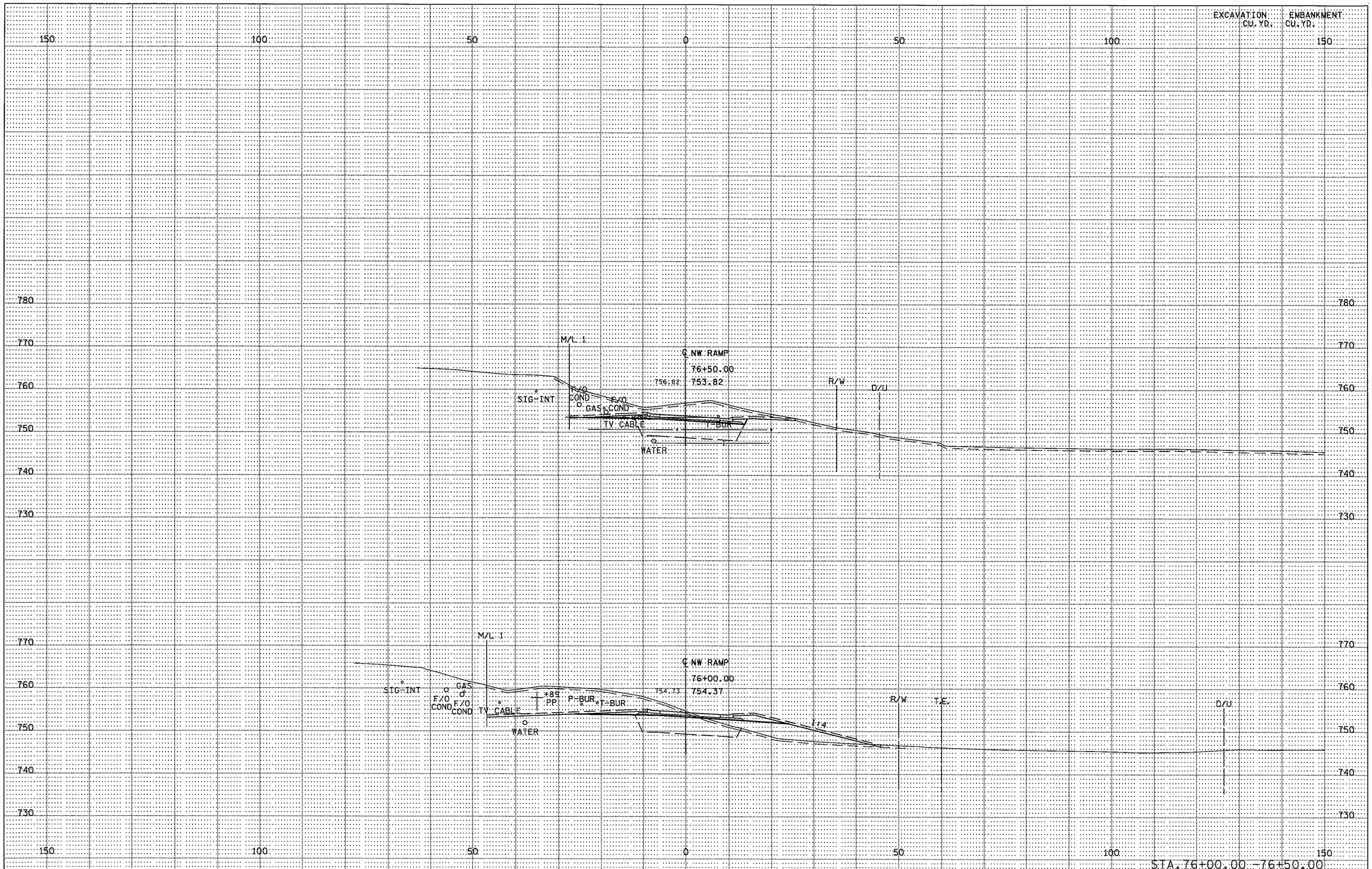

S.P. 179-020-031 S.P. 019-605-028 | STATE PROJ. NO. 1901-148 (TH 13) SHEET NO. X75 OF X137 SHEETS

DISTRICT * : METRO
IPLOT NAME: d1901148_nwramp_xpl6
PATH & FILENAME: Projects/DM_ROS/013/1901/148/Design/XS/d1901148_nwramp_xpl.dgn
PLOTTED/REVISED: 11-JUN-2012 07:26

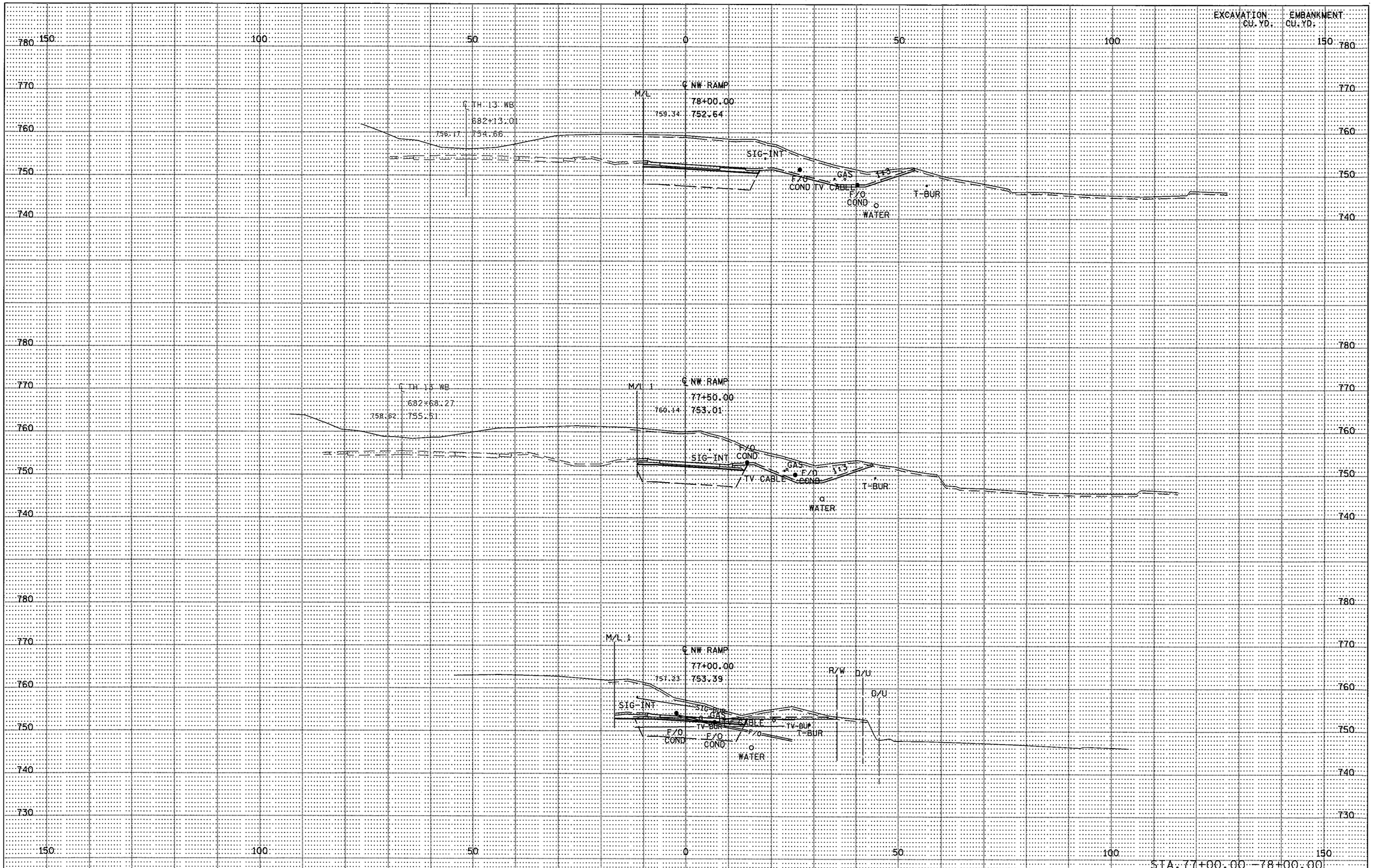

S.P. 179-020-031 S.P. 019-605-028 | STATE PROJ. NO. 1901-148 (TH 13) SHEET NO. X76 OF X137 SHEETS

PLOTTED/REVISED: 15-JUN-2012 10:38

DISTRICT *: METRO
IPLOT NAME: d1901148_nwramp_xp8
PATH & FILENAME: Projects/DM_ROS/013/1901/148/Design/XS/d1901148_nwramp_xpl.dgn

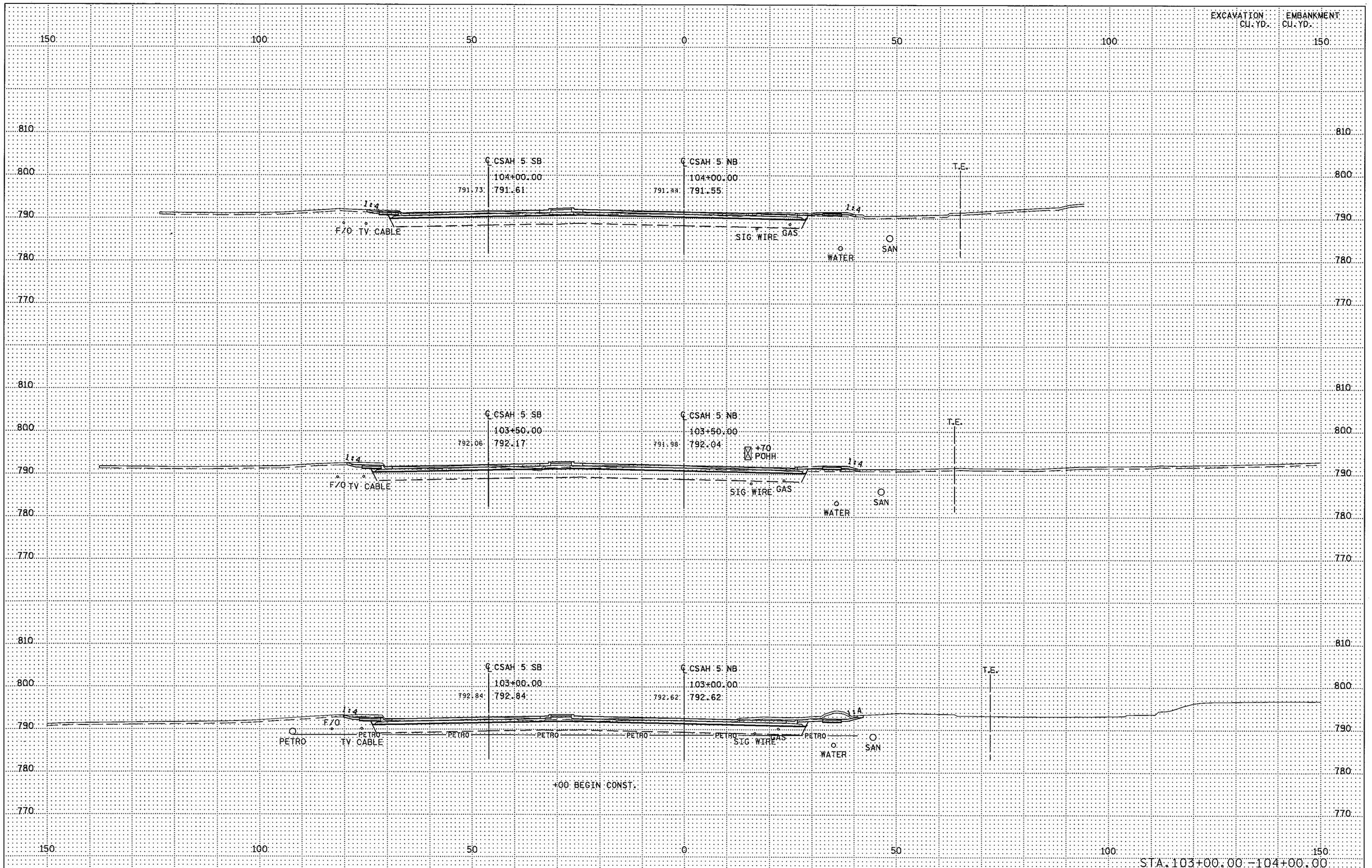

PLOTTED/REVISED: 11-JUN-2012 07:28

DISTRICT #: METRO
IPLOT NAME: d1901148_csah5_xpl
PATH & FILENAME: Projects/DM_ROS/013/1901/148/Design/XS/d1901148_csah5_xpl.dgn

S.P. 179-020-031 S.P. 019-605-028 | STATE PROJ. NO. 1901-148 (TH 13) SHEET NO. X77 OF X137 SHEETS

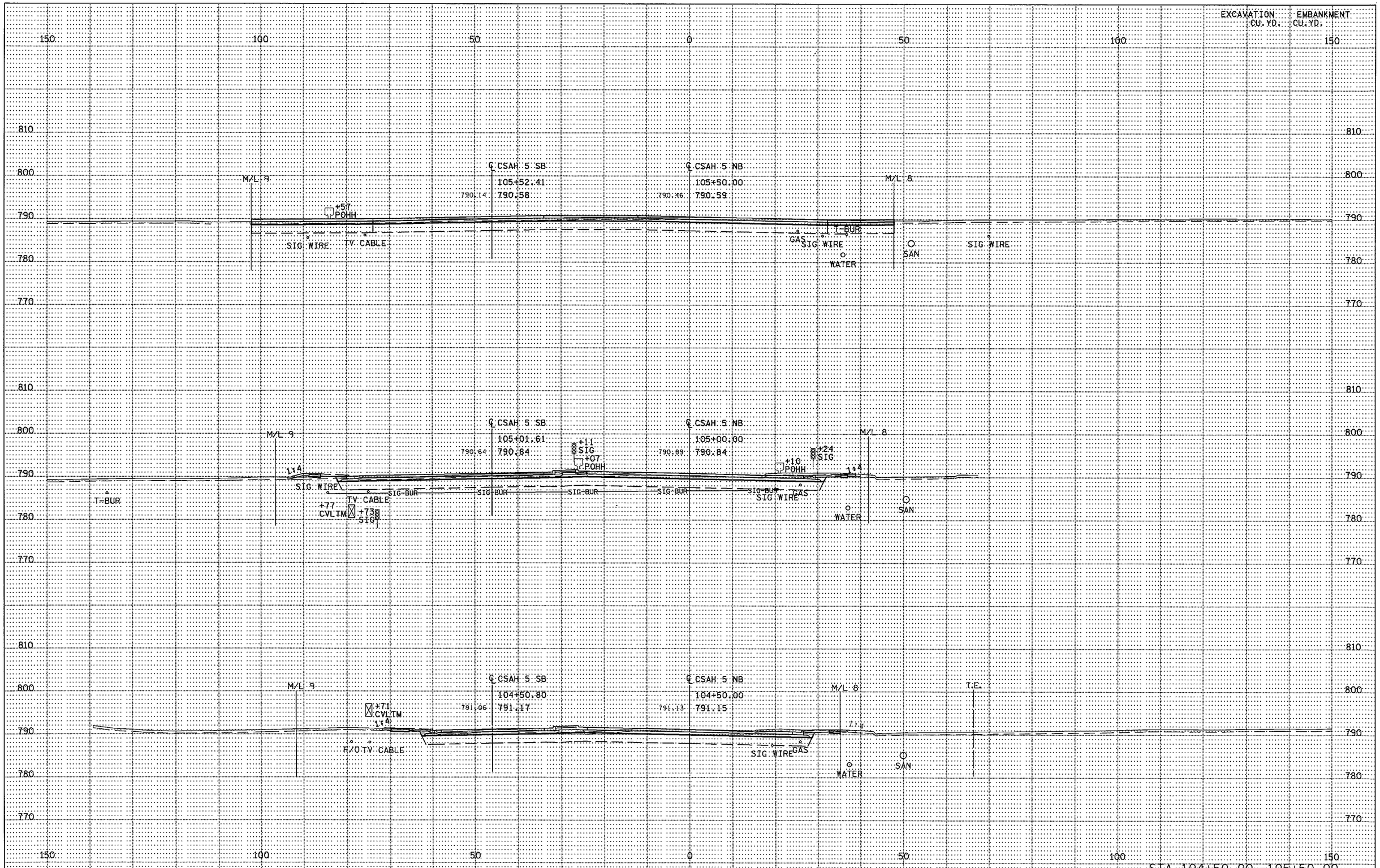

S.P. 179-020-031 S.P. 019-605-028 | STATE PROJ. NO. 1901-148 (TH 13) SHEET NO. X78 OF X137 SHEETS

DISTRICT *: METRO
IPLOT NAME: d1901148_csah5_xpl
PATH & FILENAME: P:\Projects/DM_ROS/013/1901/148/Design/XS/d1901148_csah5_xpl.dgn
PLOTTED/REVISED: 11-JUN-2012 07:28

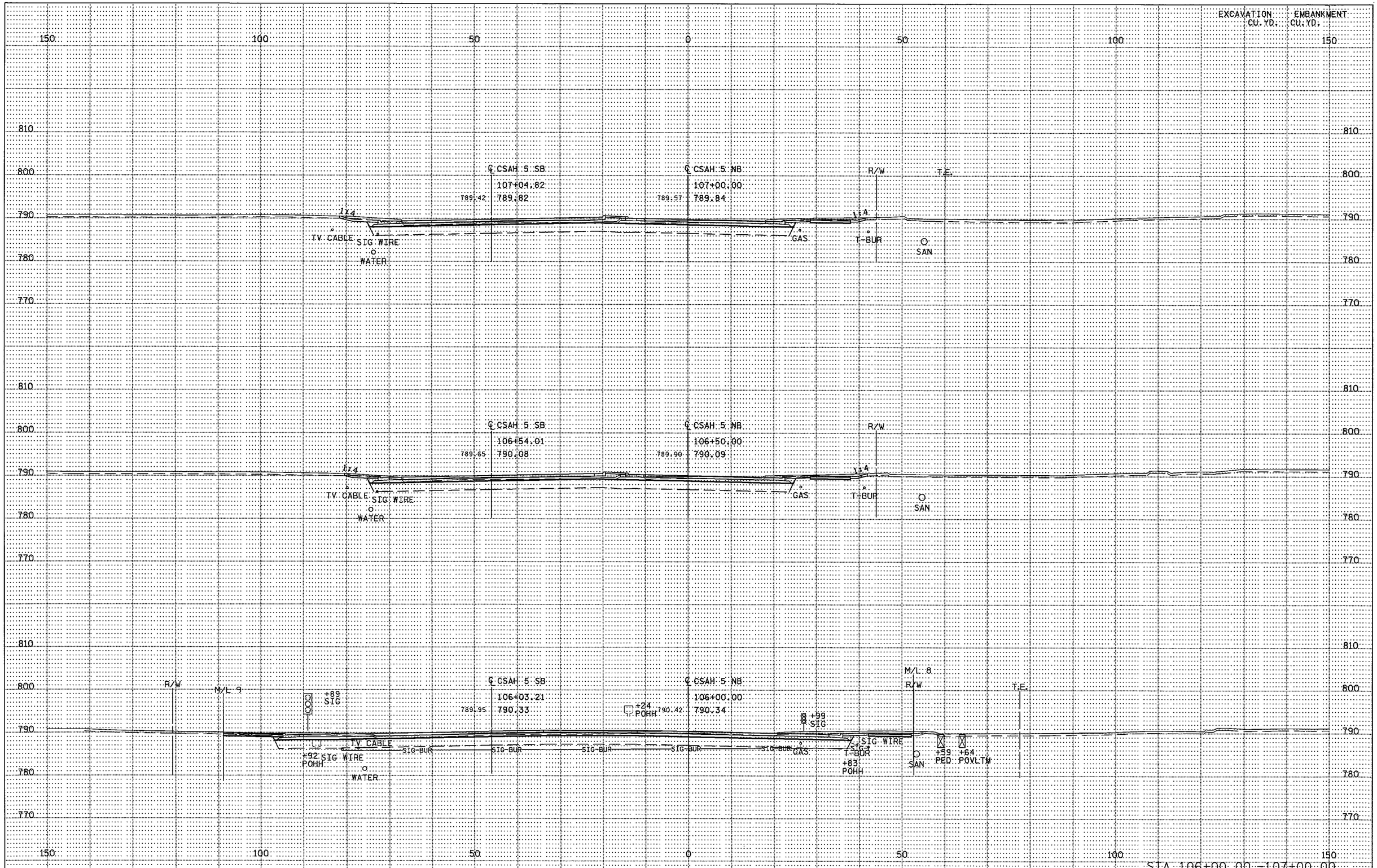

S.P. 179-020-031 S.P. 019-605-028 | STATE PROJ. NO. 1901-148 (TH 13) SHEET NO. X79 OF X137 SHEETS

DISTRICT *: METRO
IPLOT NAME: d190l148_csah5_xpl2
PATH & FILENAME: Projects/DM_R05/013/190l/148/Design/XS/d190l148_csah5_xpl.dgn
PLOTTED/REVISED: 11-JUN-2012 07:28

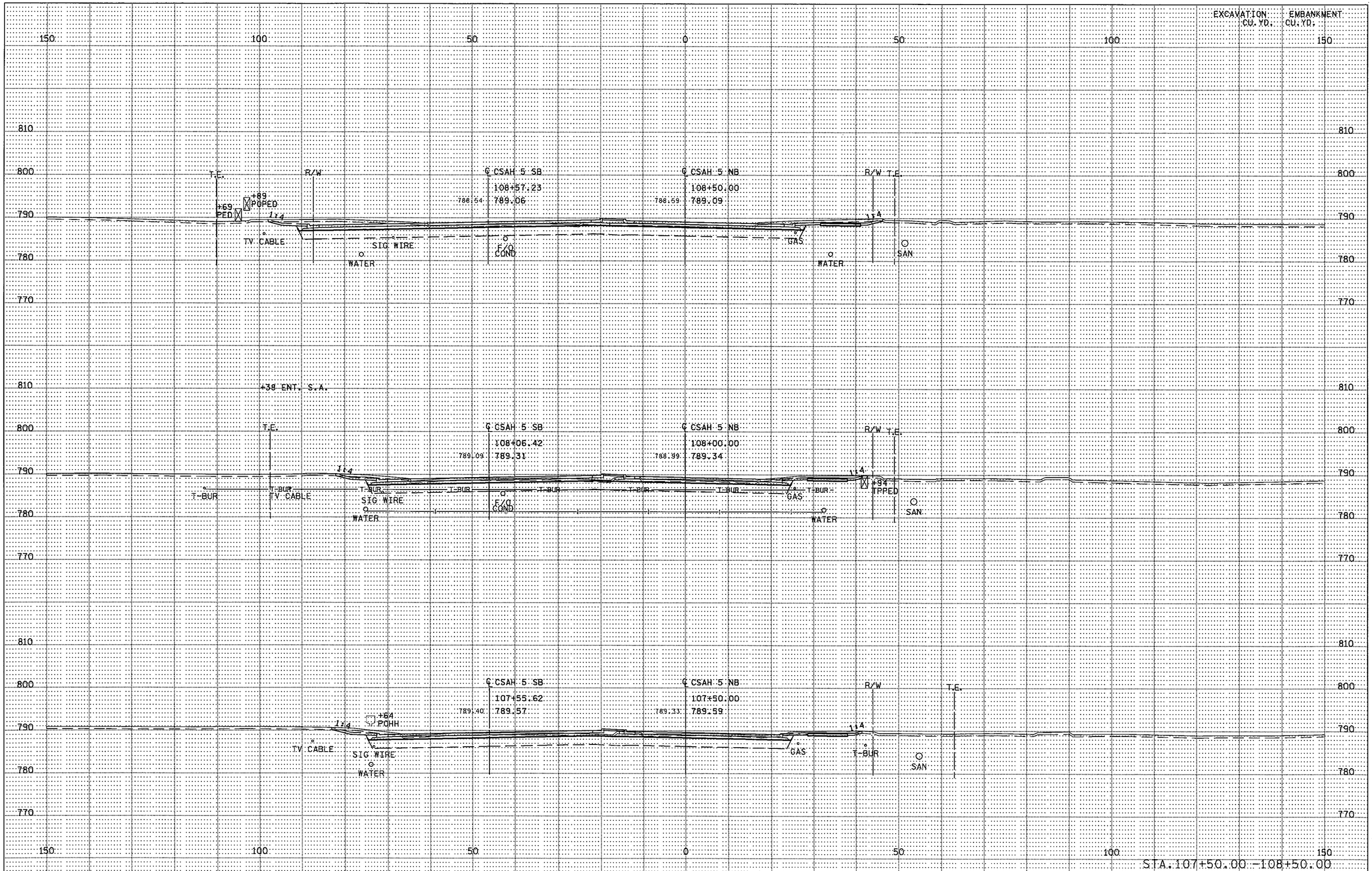

S.P. 179-020-031 S.P. 019-605-028 | STATE PROJ. NO. 1901-148 (TH 13) SHEET NO. X80 OF X137 SHEETS

DISTRICT •: METRO
IPLOT NAME: d1901148_csah5_xpl3
PATH & FILENAME: Projects/DM_ROS/013/1901/148/Design/XS/d1901148_csah5_xpl.dgn
PLOTTED/REVISED: 11-JUN-2012 07:28

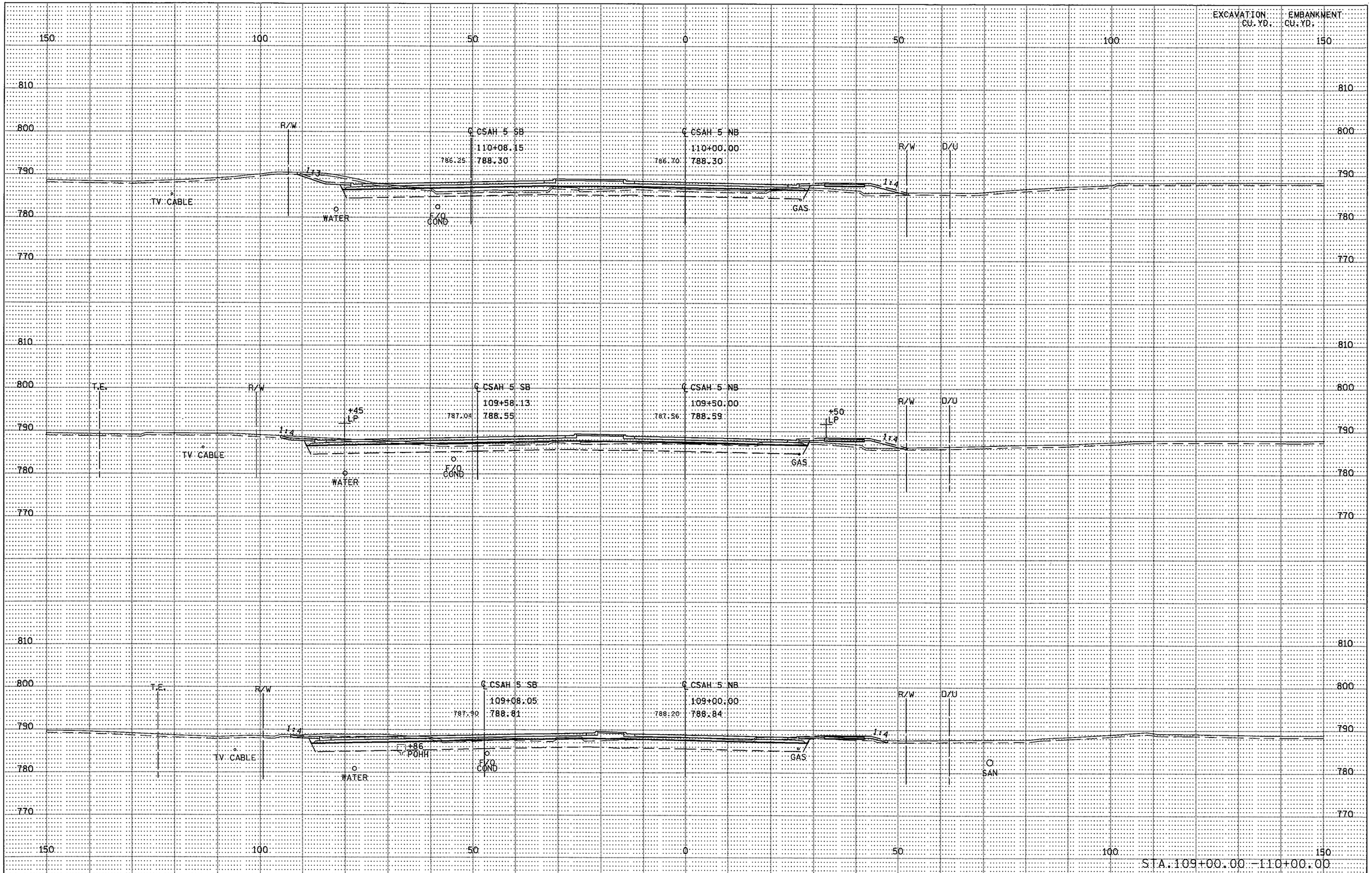

S.P. 179-020-031 S.P. 019-605-028 | STATE PROJ. NO. 1901-148 (TH 13) SHEET NO. X81 OF X137 SHEETS

DISTRICT *: METRO
IPLOT NAME: d190l148_csah5_xpl4
PATH & FILENAME: Projects/DM_ROS/013/190l/148/Design/XS/d190l148_csah5_xpl.dgn
PLOTTED/REVISED: 11-JUN-2012 07:28

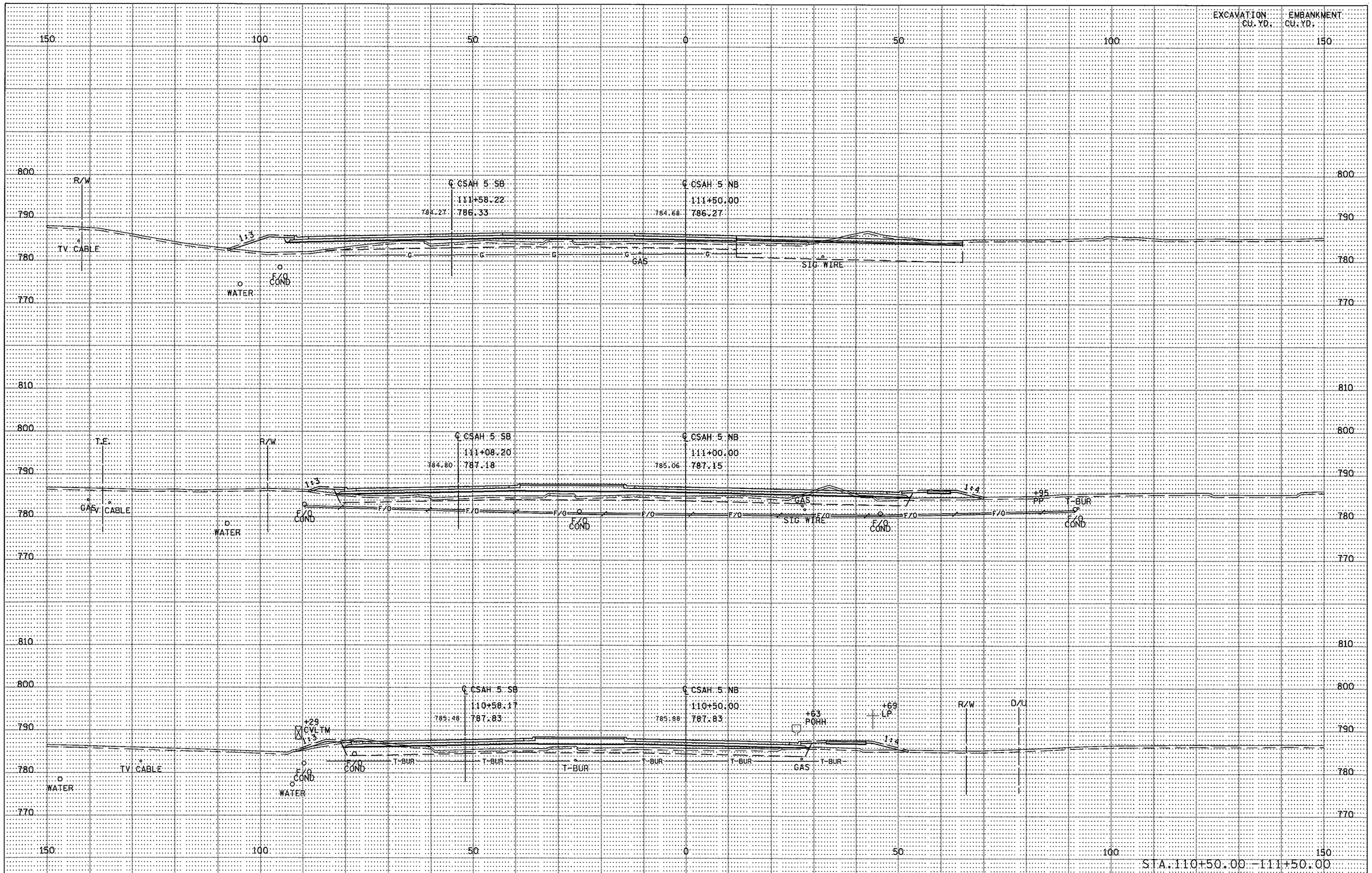

S.P. 179-020-031 S.P. 019-605-028 | STATE PROJ. NO. 1901-148 (TH 13) SHEET NO. X82 OF X137 SHEETS

DISTRICT *: METRO
IPLOT NAME: d1901148_csah5_xpl5
PATH & FILENAME: Projects/DM_ROS/013/1901/148/Design/XS/d1901148_csah5_xpl.dgn
PLOTTED/REVISED: 11-JUN-2012 07:28

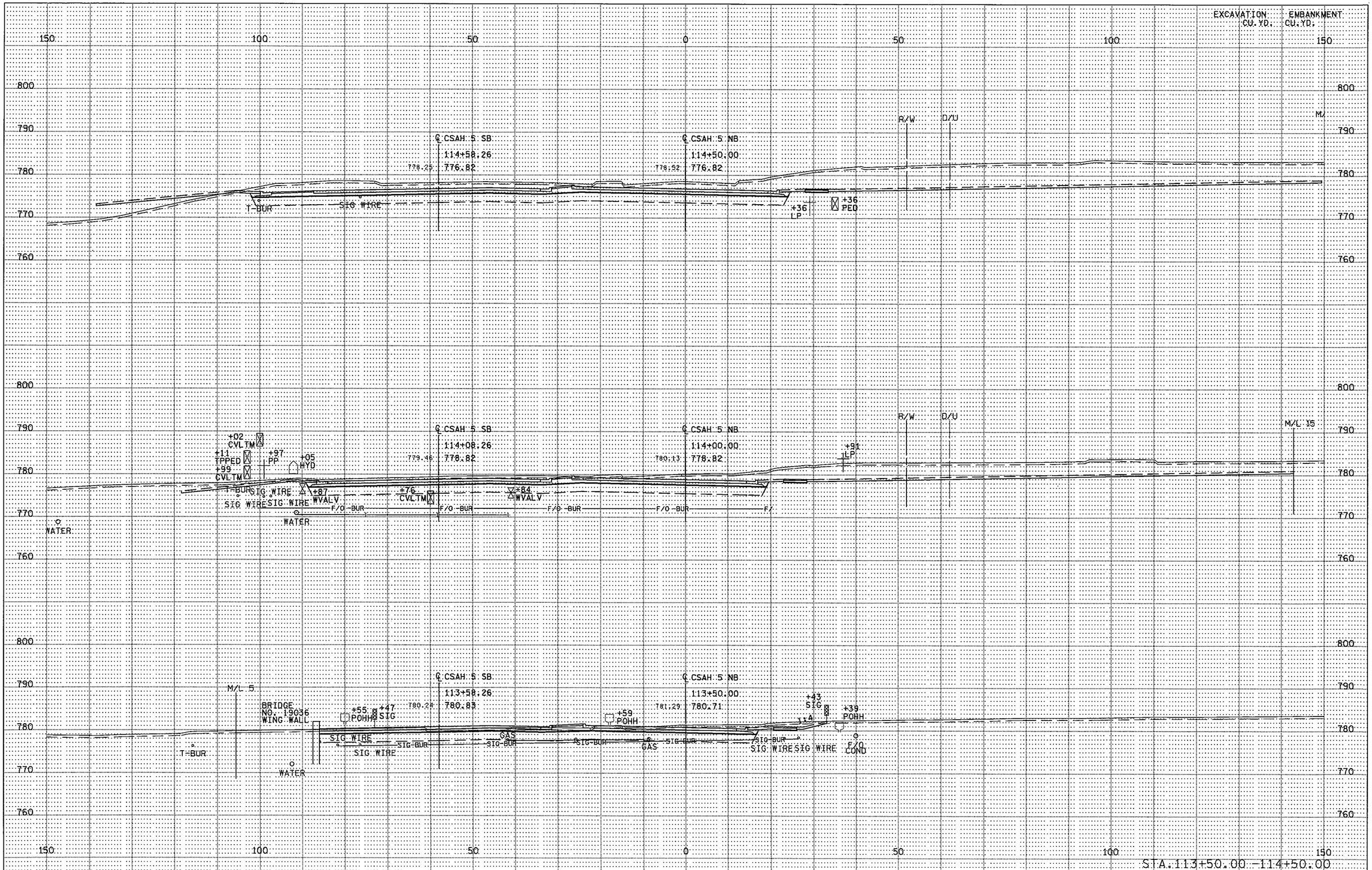

S.P. 179-020-031 S.P. 019-605-028 | STATE PROJ. NO. 1901-148 (TH 13) SHEET NO. X83 OF X137 SHEETS

DISTRICT •: METRO
IPLOT NAME: d1901148_csah5_xpl6
PATH & FILENAME: Projects/DM_ROS/013/1901/148/Design/XS/d1901148_csah5_xpl.dgn
PLOTTED/REVISED: 11-JUN-2012 07:28

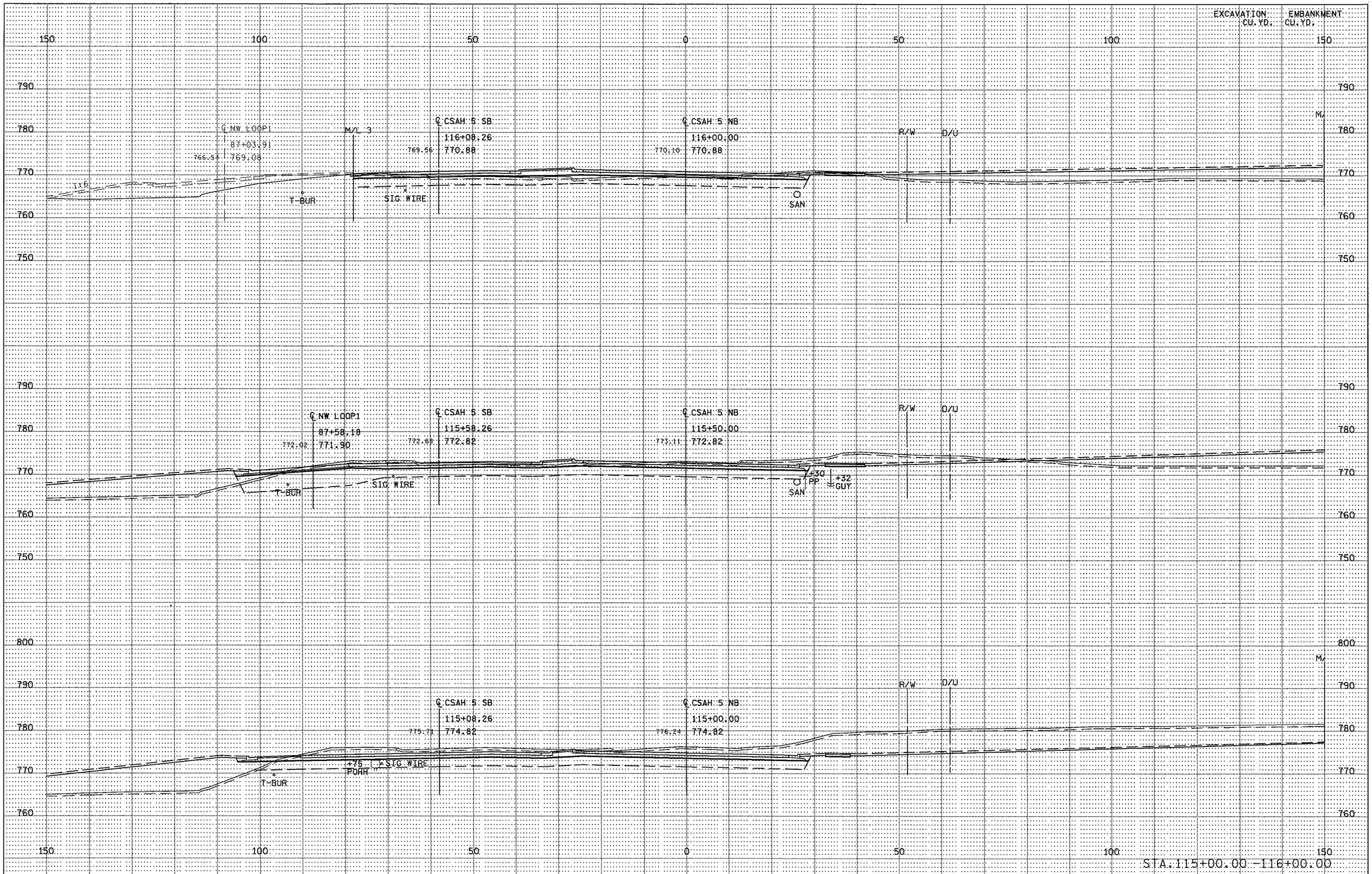

S.P. 179-020-031 S.P. 019-605-028 | STATE PROJ. NO. 1901-148 (TH 13) SHEET NO. X84 OF X137 SHEETS

DISTRICT *: METRO
IPLOT NAME: d190l148_csah5_xpl7
PATH & FILENAME: Projects/DM_ROS/013/190l/148/Design/XS/d190l148_csah5_xpl.dgn
PLOTTED/REVISED: 11-JUN-2012 07:29

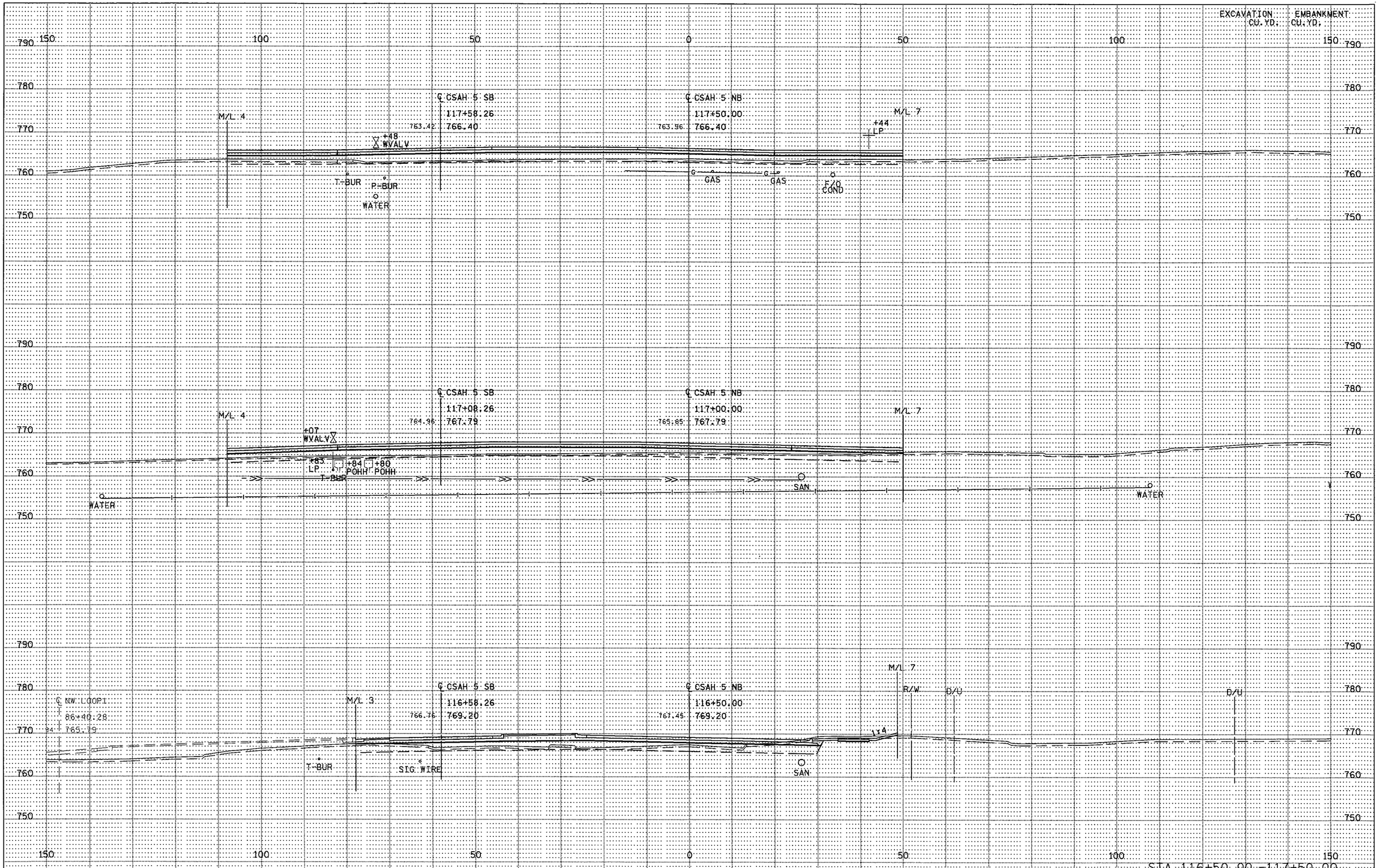

S.P. 179-020-031 S.P. 019-605-028 | STATE PROJ. NO. 1901-148 (TH 13) SHEET NO. X85 OF X137 SHEETS

DISTRICT •: METRO
IPLOT NAME: d190l148_csah5_xpl8
PATH & FILENAME: Projects/DM_ROS/013/190l/148/Design/XS/d190l148_csah5_xpl.dgn
PLOTTED/REVISED: 11-JUN-2012 07:29

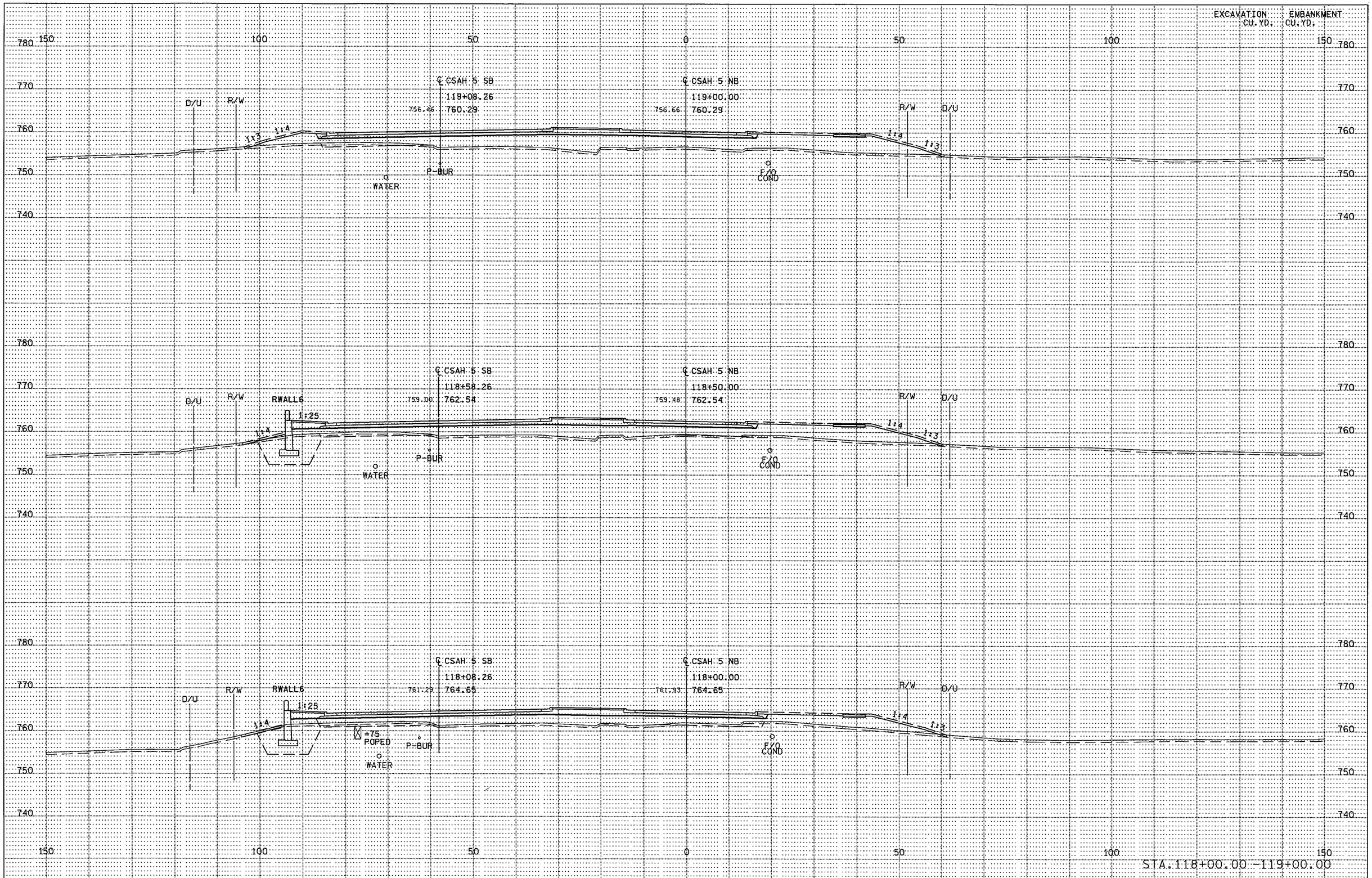

PLOTTED/REVISED: 11-JUN-2012 07:29

DISTRICT * : METRO
IPLOT NAME: d1901148_csah5_xpl9
PATH & FILENAME: Projects/DM_ROS/013/1901/148/Design/XS/d1901148_csah5_xpl.dgn

S.P. 179-020-031 S.P. 019-605-028 | STATE PROJ. NO. 1901-148 (TH 13) SHEET NO. X86 OF X137 SHEETS

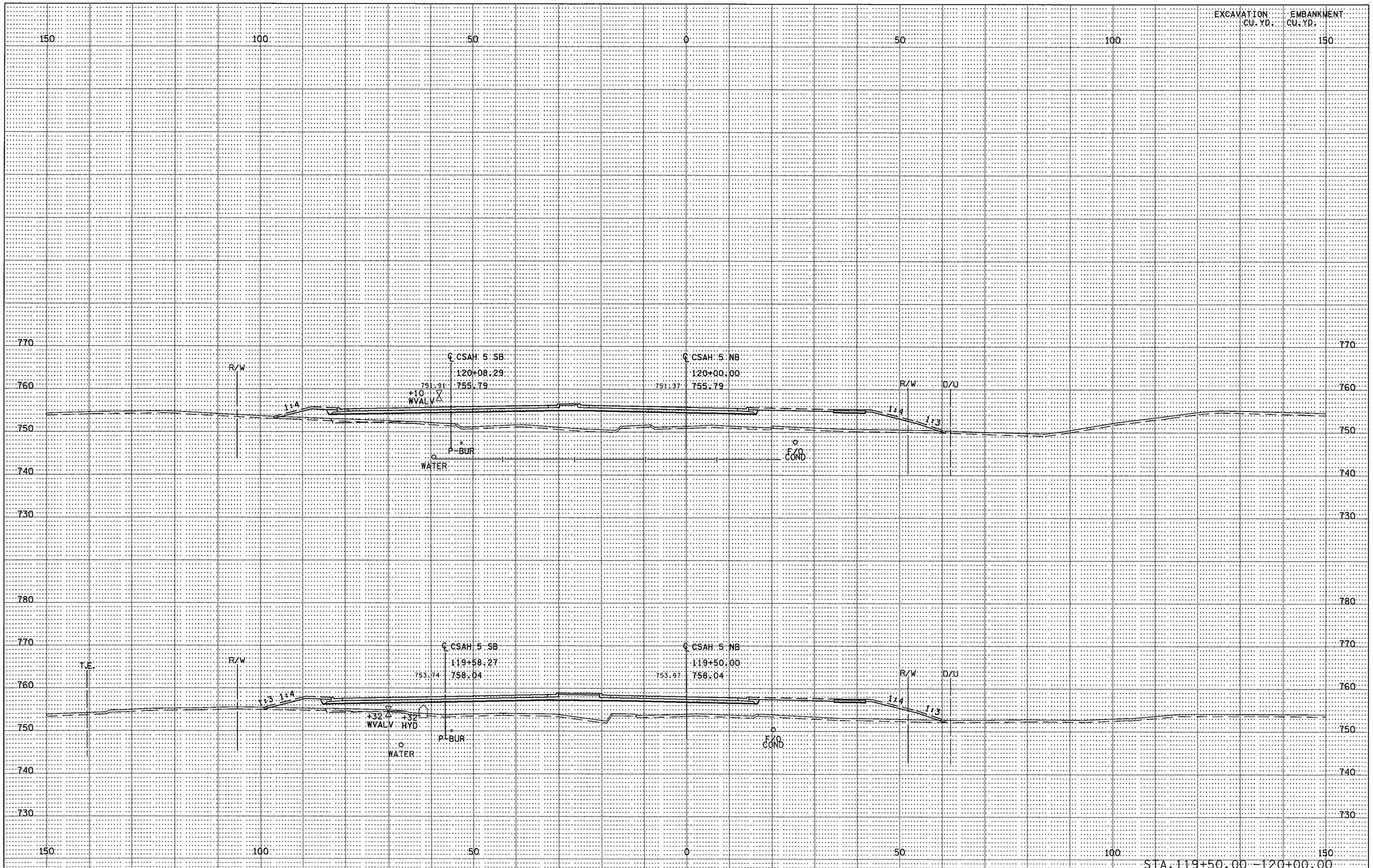

S.P. 179-020-031 S.P. 019-605-028 | STATE PROJ. NO. 1901-148 (TH 13) SHEET NO. X87 OF X137 SHEETS

DISTRICT *: METRO
IPLOT NAME: d1901148_csah5_xpl10
PATH & FILENAME: Projects/DM_ROS/013/1901/148/Design/XS/d1901148_csah5_xpl.dgn
PLOTTED/REVISED: 11-JUN-2012 07:29

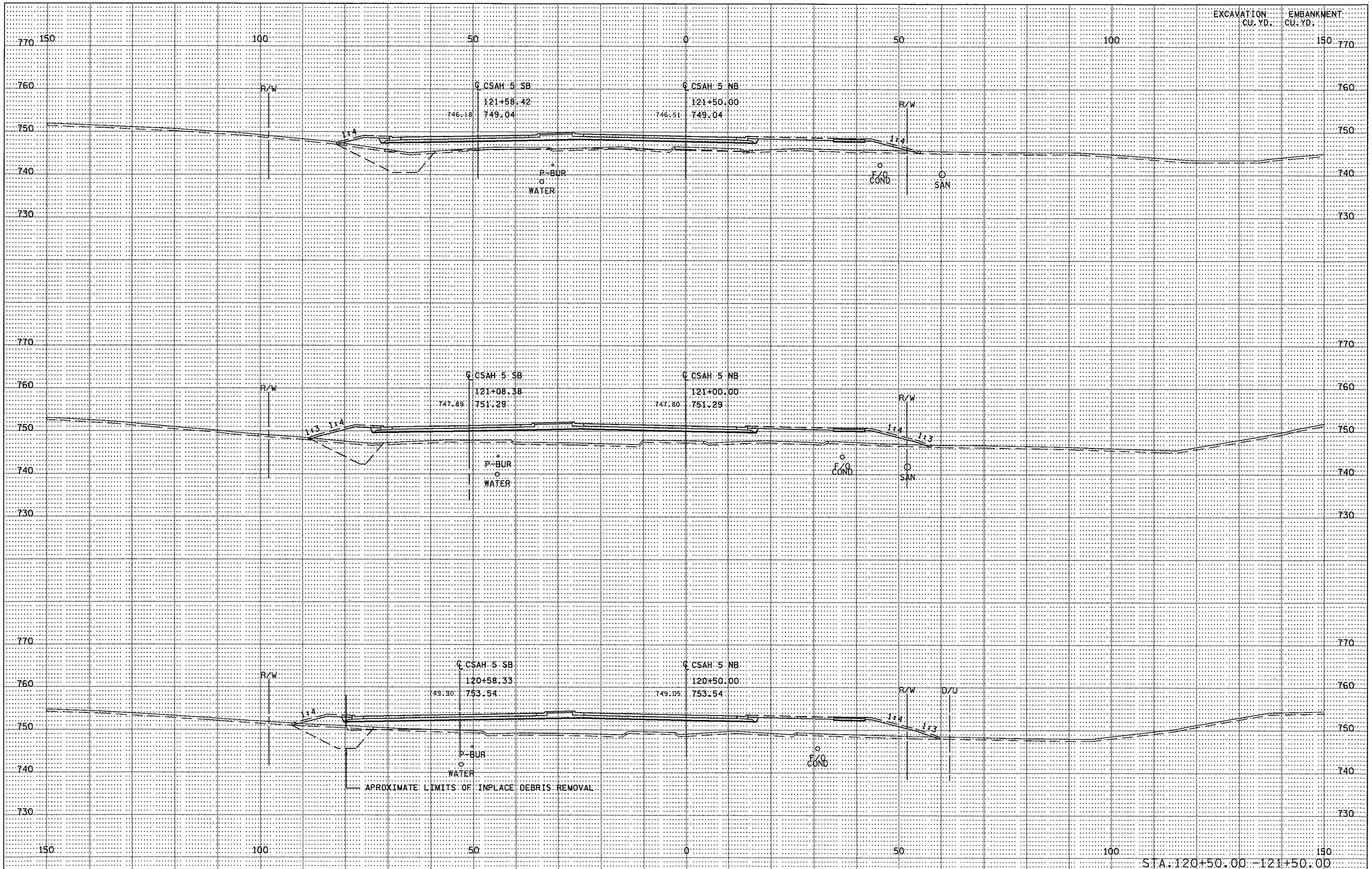

S.P. 179-020-031 S.P. 019-605-028 | STATE PROJ. NO. 1901-148 (TH 13) SHEET NO. X88 OF X137 SHEETS

DISTRICT *: METRO
IPLOT NAME: d1901148_csah5_xpIII
PATH & FILENAME: Projects/DM_R05/013/1901/148/Design/XS/d1901148_csah5_xpl.dgn
PLOTTED/REVISED: 11-JUN-2012 07:29

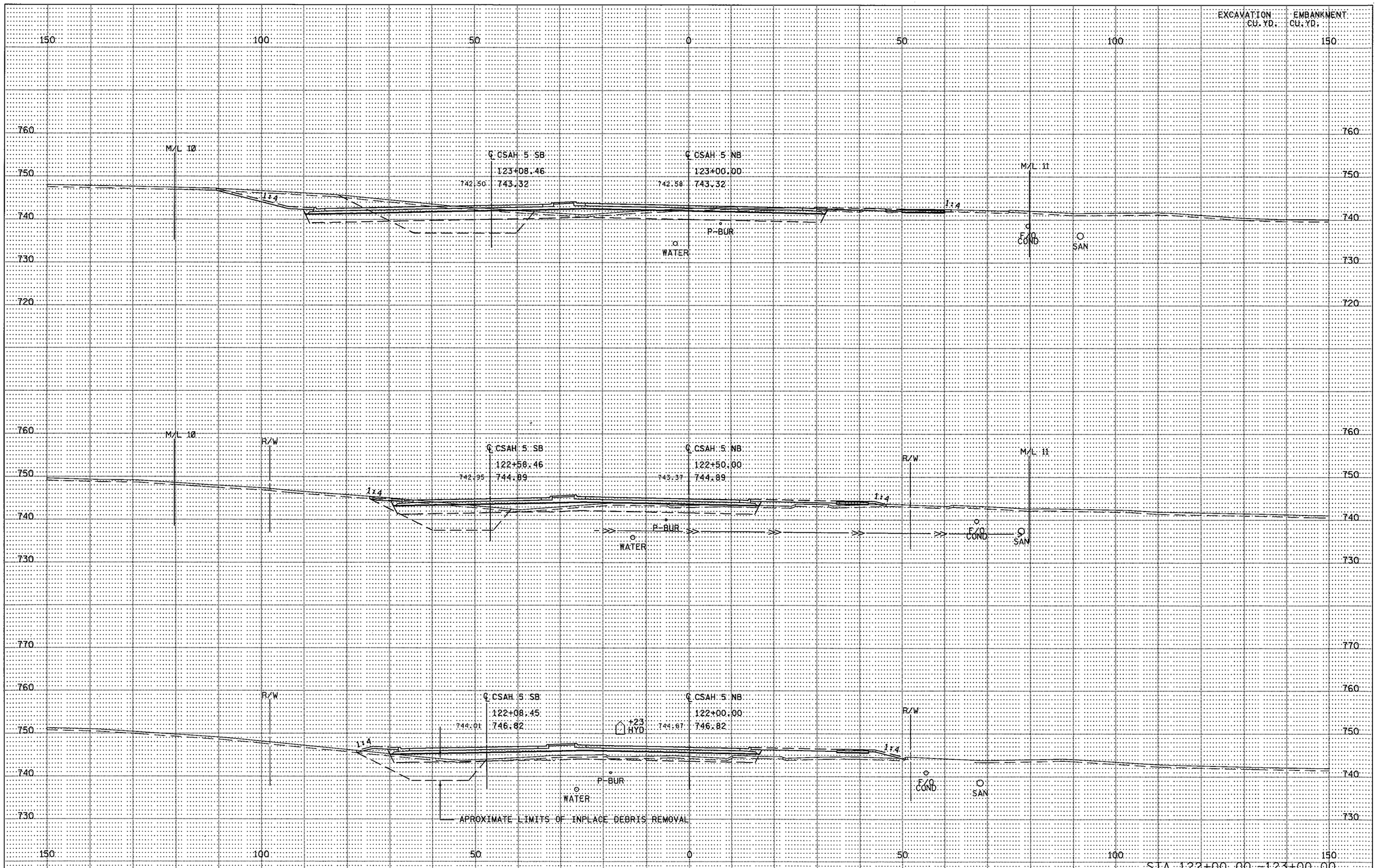

S.P. 179-020-031 S.P. 019-605-028 | STATE PROJ. NO. 1901-148 (TH 13) SHEET NO. X89 OF X137 SHEETS

DISTRICT •: METRO
IPLOT NAME: d1901148_csah5_xpl12
PATH & FILENAME: Projects/DM_ROS/013/1901/148/Design/XS/d1901148_csah5_xpl.dgn
PLOTTED/REVISED: 11-JUN-2012 07:29

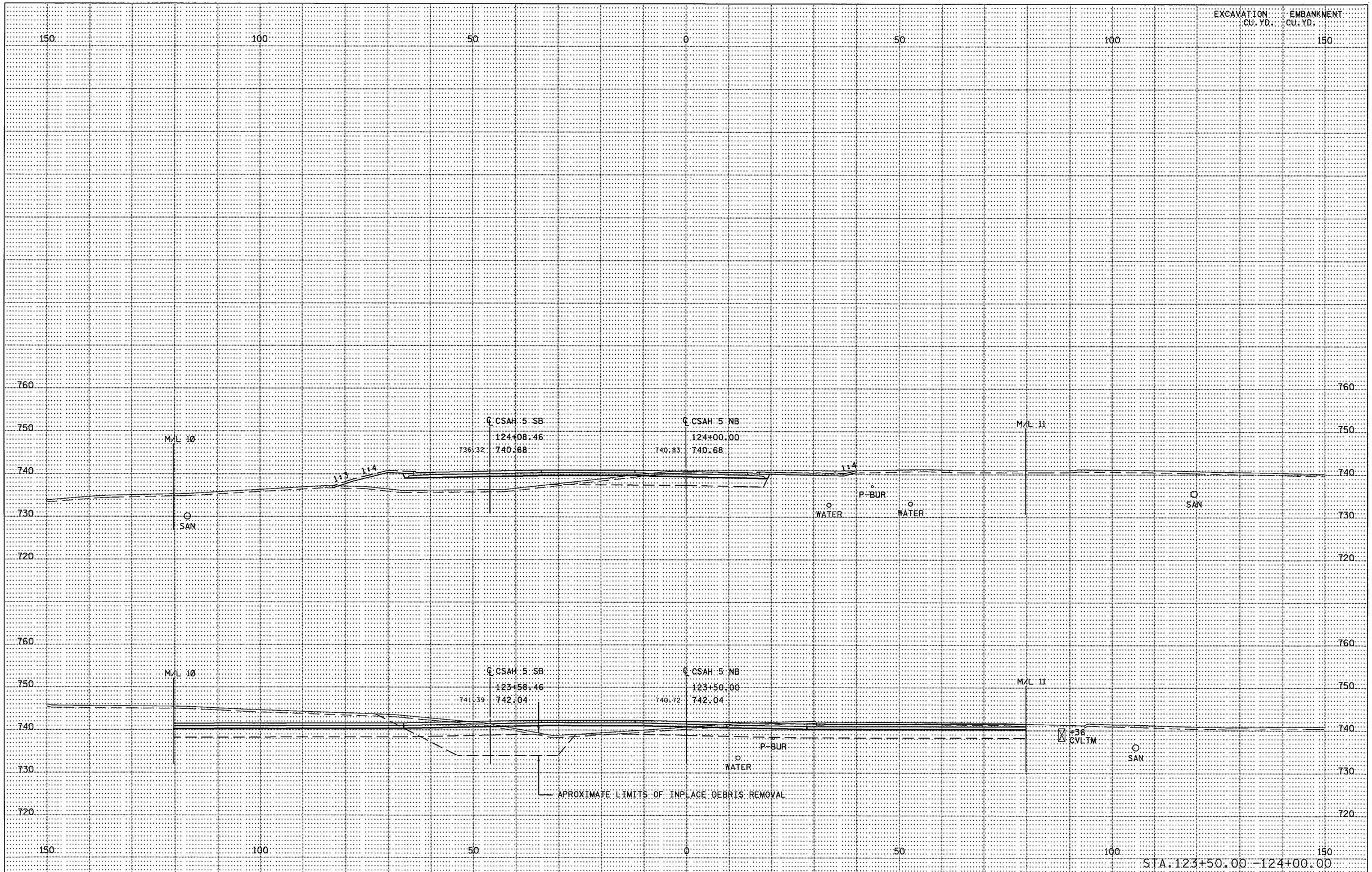

DISTRICT * : METRO
IPLOT NAME: d1901148_csah5_xpl13
PATH & FILENAME: Projects/DM_ROS/013/1901/148/Design/XS/d1901148_csah5_xpl.dgn
PLOTTED/REVISED: 11-JUN-2012 07:29

S.P. 179-020-031 S.P. 019-605-028 | STATE PROJ. NO. 1901-148 (TH 13) SHEET NO. X90 OF X137 SHEETS

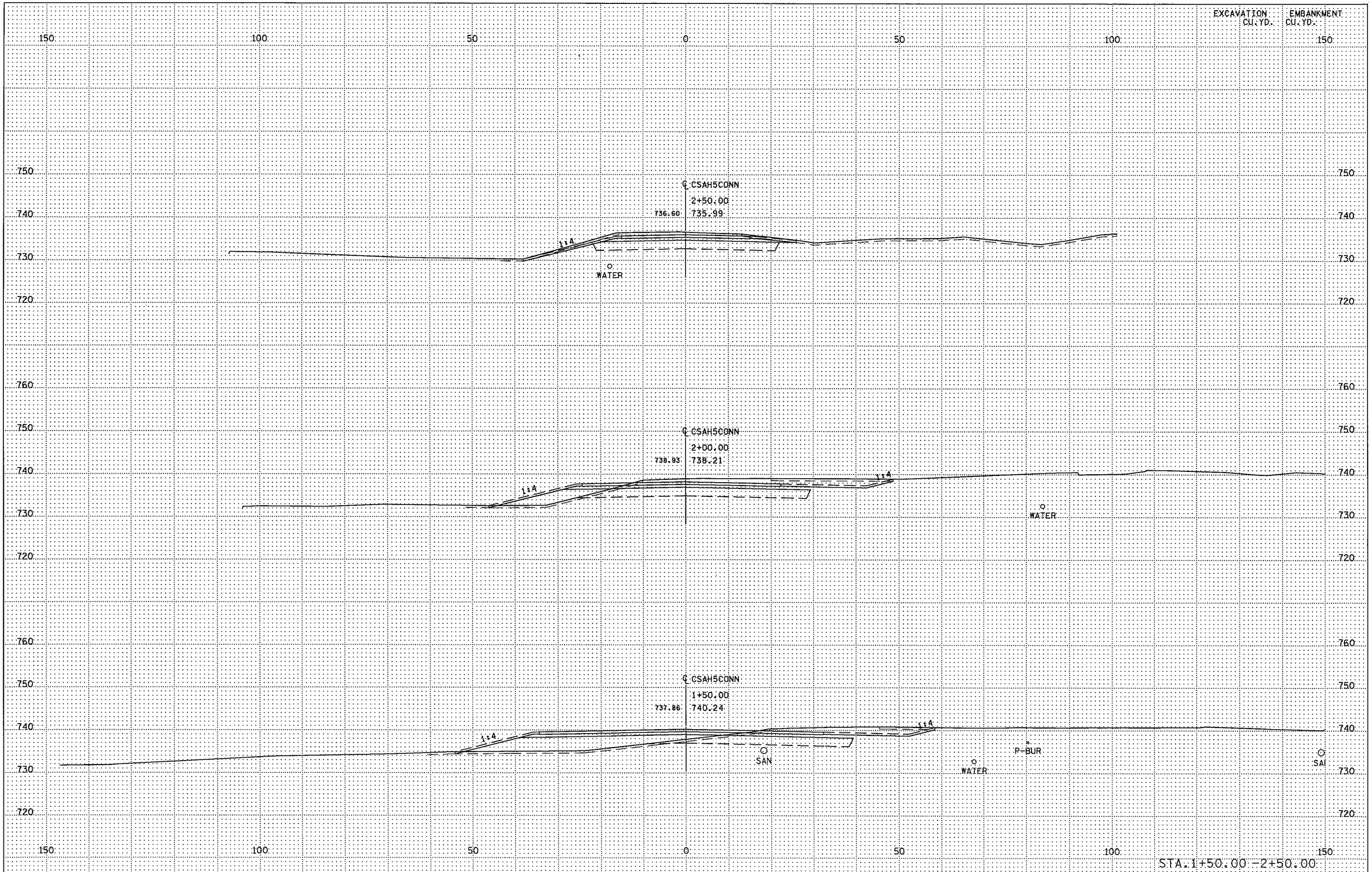

PLOTTED/REVISED: 11-JUN-2012 07:30

DISTRICT * : METRO
IPLOT NAME: d1901148_CSAH5CONN_xpl
PATH & FILENAME: Projects/DM_ROS/013/1901/148/Design/XS/d1901148_csah5conn_xpl.dgn

S.P. 179-020-031 S.P. 019-605-028 | STATE PROJ. NO. 1901-148 (TH 13) SHEET NO. X91 OF X137 SHEETS

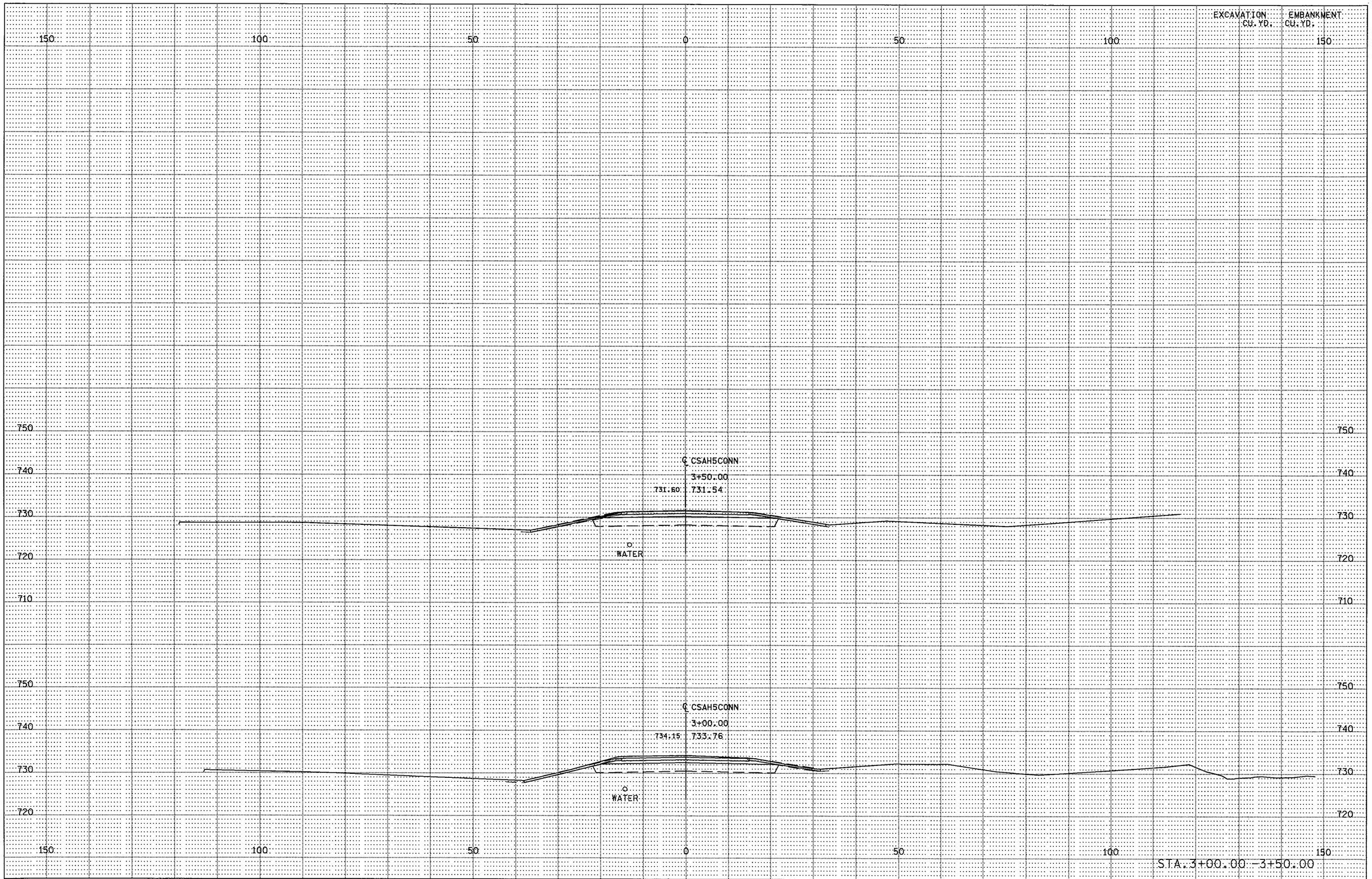

S.P. 179-020-031 S.P. 019-605-028 | STATE PROJ. NO. 1901-148 (TH 13) SHEET NO. X92 OF X137 SHEETS

PLOTTED/REVISED: 11-JUN-2012 07:30

DISTRICT *: METRO
IPLOT NAME: d1901148_CSAH5CONN_xpll
PATH & FILENAME: Projects/DM_ROS/013/1901/148/Design/XS/d1901148_csah5conn_xpl.dgn

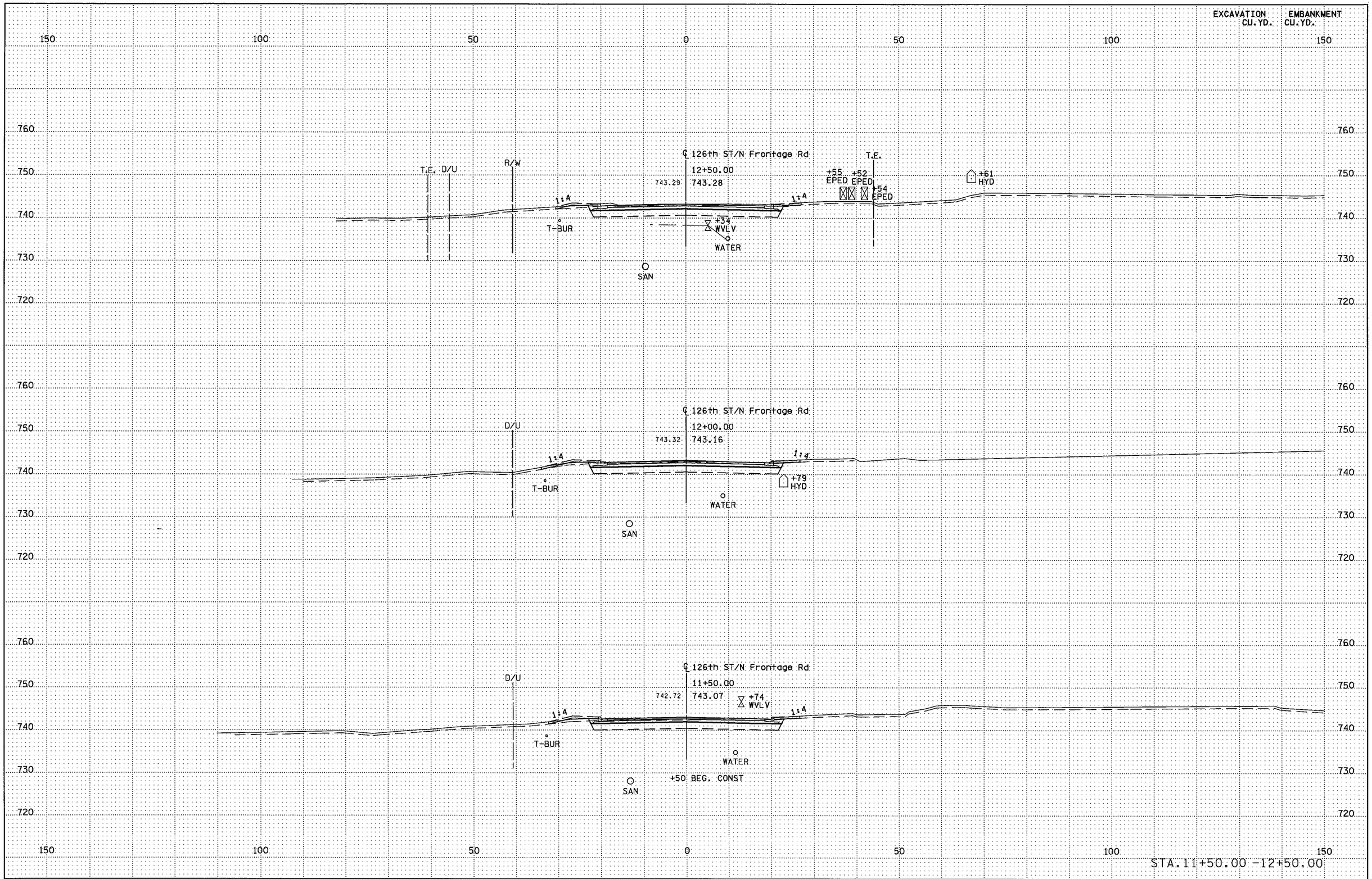

S.P. 179-020-031 S.P. 019-605-028 | STATE PROJ. NO. 1901-148 (TH 13) SHEET NO. X93 OF X137 SHEETS

PLOTTED/REVISED: 11-JUN-2012 07:33

DISTRICT #: METRO
IPLOT NAME: d1901148_126th_xpl
PATH & FILENAME: Projects/DM_ROS/013/1901/148/Design/XS/d1901148_126th_xpl.dgn

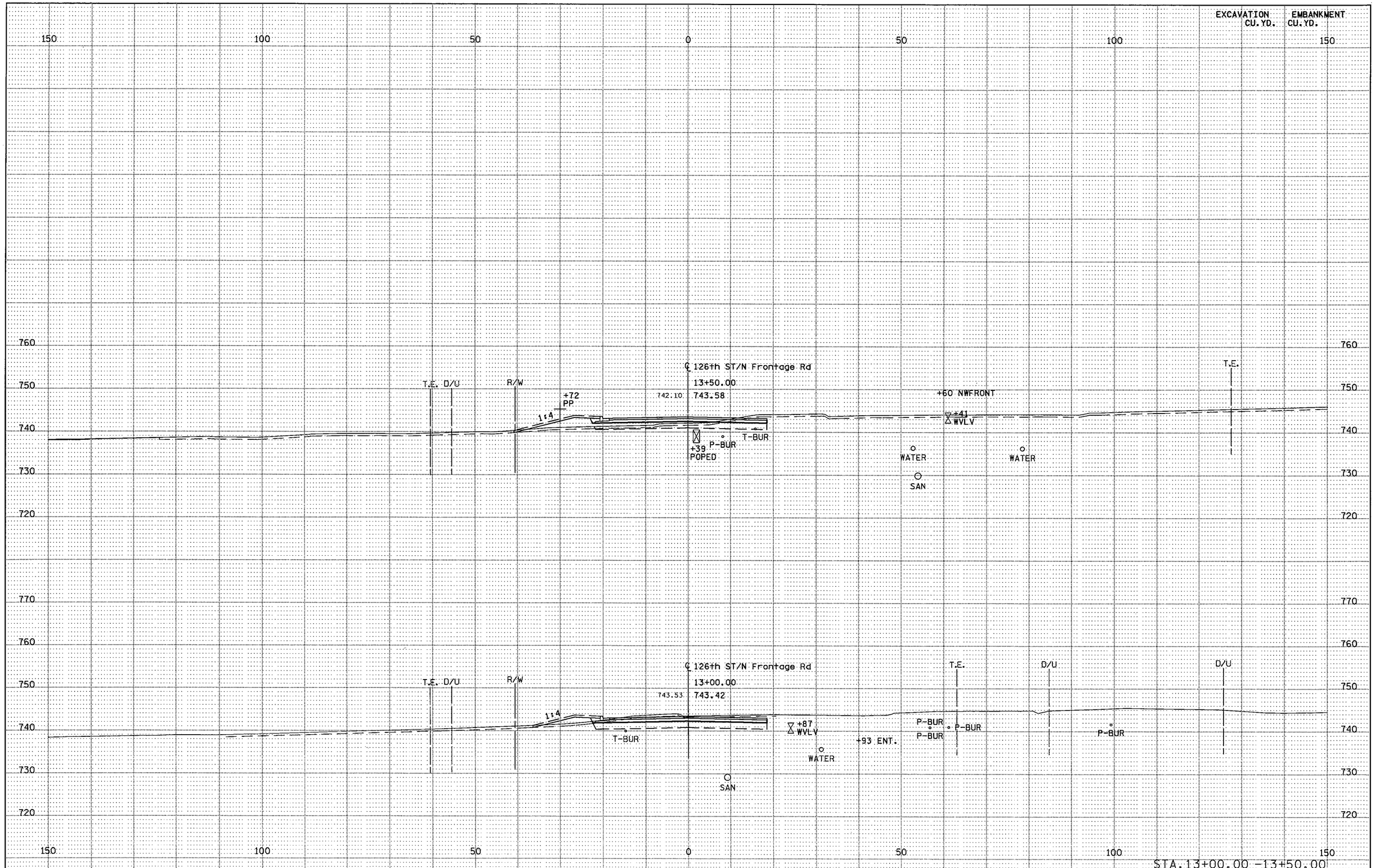

S.P. 179-020-031 S.P. 019-605-028 | STATE PROJ. NO. 1901-148 (TH 13) SHEET NO. X94 OF X137 SHEETS

DISTRICT # : METRO
IPLOT NAME: d1901148_126th_xpl1
PATH & FILENAME: Projects/DM_ROS/013/1901/148/Design/XS/d1901148_126th_xpl.dgn
PLOTTED/REVISED: 11-JUN-2012 07:33

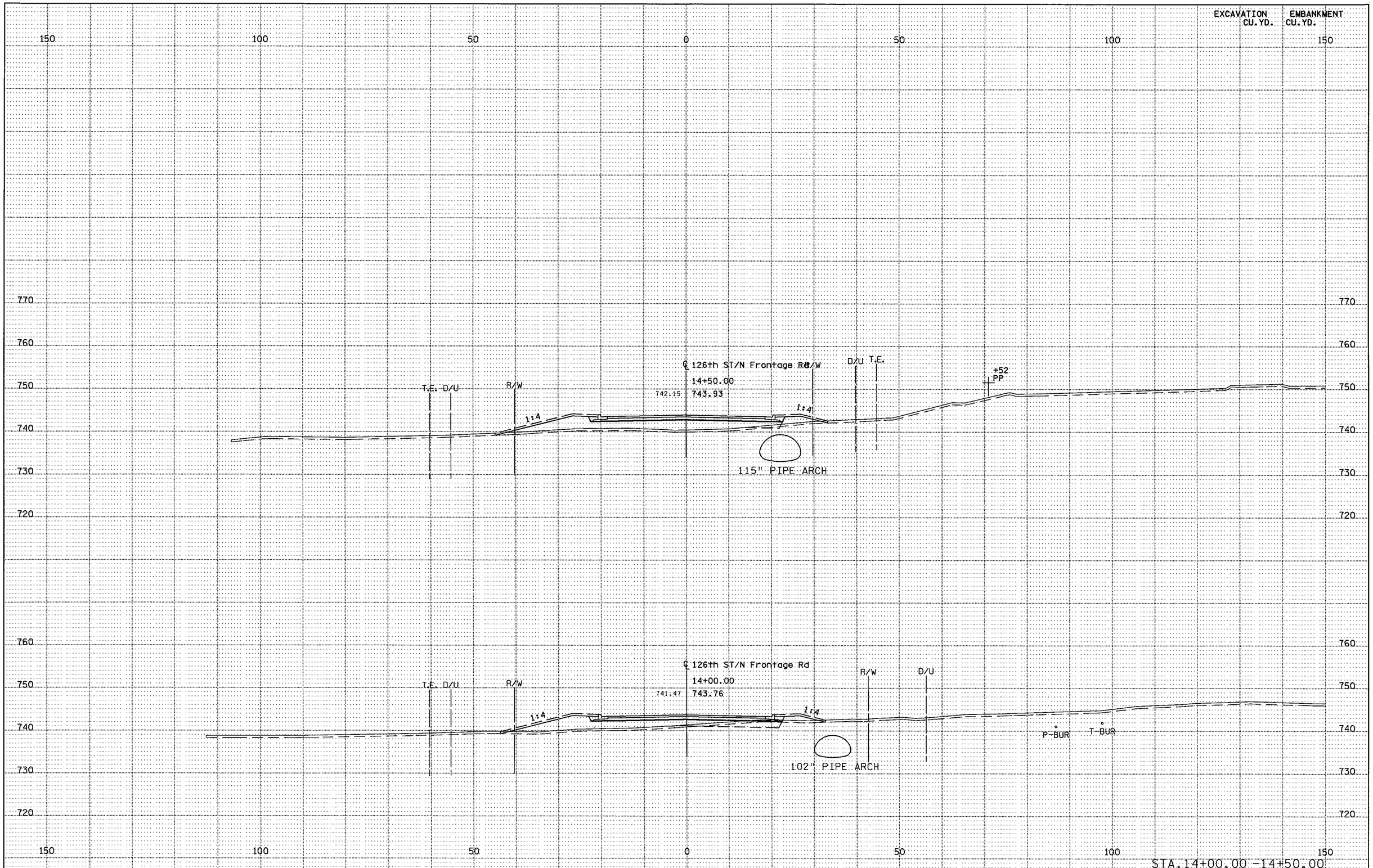

DISTRICT #: METRO
IPLOT NAME: d1901148_126th_xpl2
PATH & FILENAME: Projects/DM_ROS/013/1901/148/Design/XS/d1901148_126th_xpl.dgn
PLOTTED/REVISED: 11-JUN-2012 07:33

S.P. 179-020-031 S.P. 019-605-028 | STATE PROJ. NO. 1901-148 (TH 13) SHEET NO. X95 OF X137 SHEETS

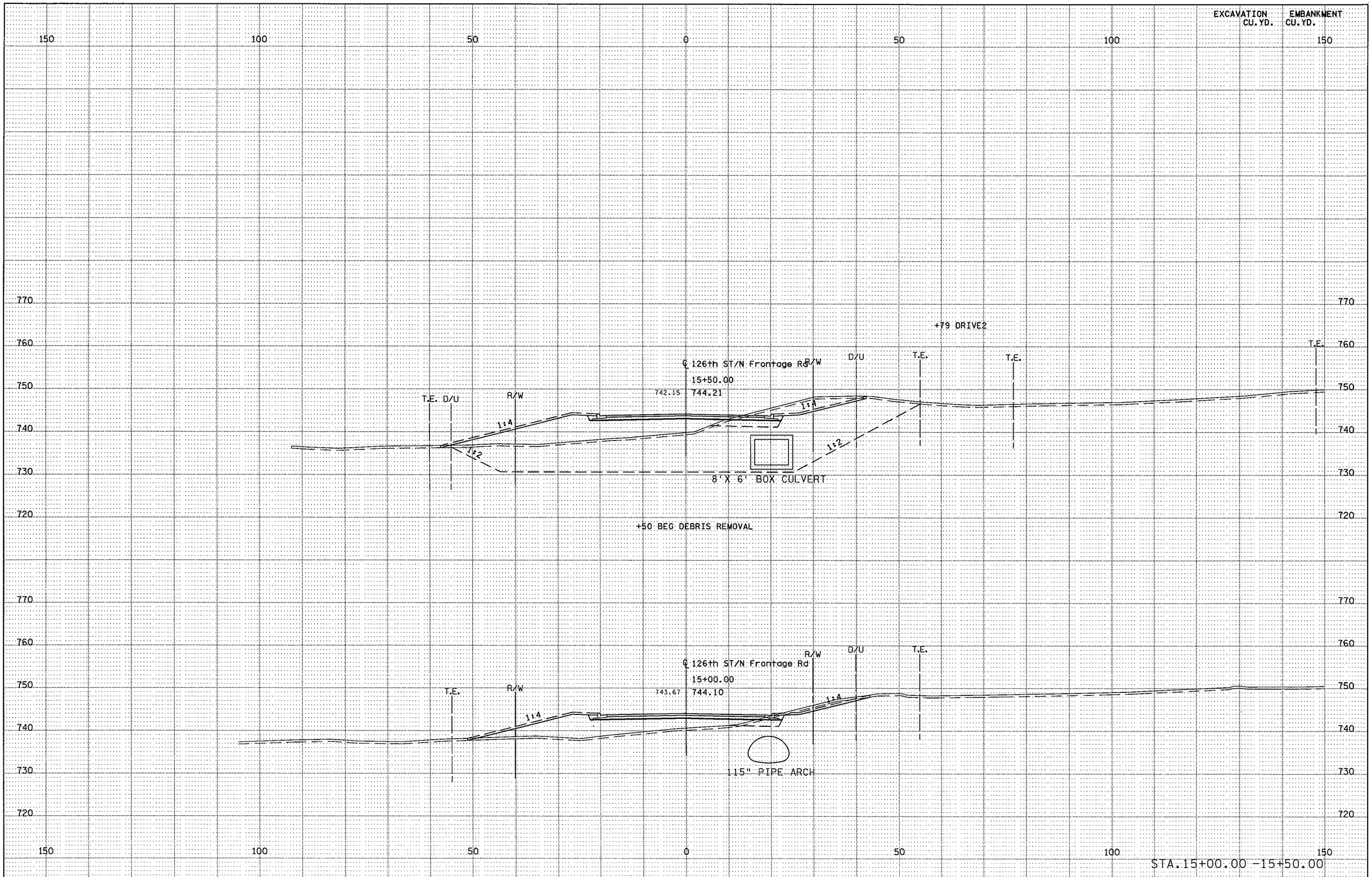

PLOTTED/REVISED: 11-JUN-2012 07:33

DISTRICT #: METRO
IPLOT NAME: d1901148_126th_xpl3
PATH & FILENAME: Projects/DM_ROS/013/1901/148/Design/XS/d1901148_126th_xpl.dgn

S.P. 179-020-031 S.P. 019-605-028 | STATE PROJ. NO. 1901-148 (TH 1·3) SHEET NO. X96 OF X1·37 SHEETS

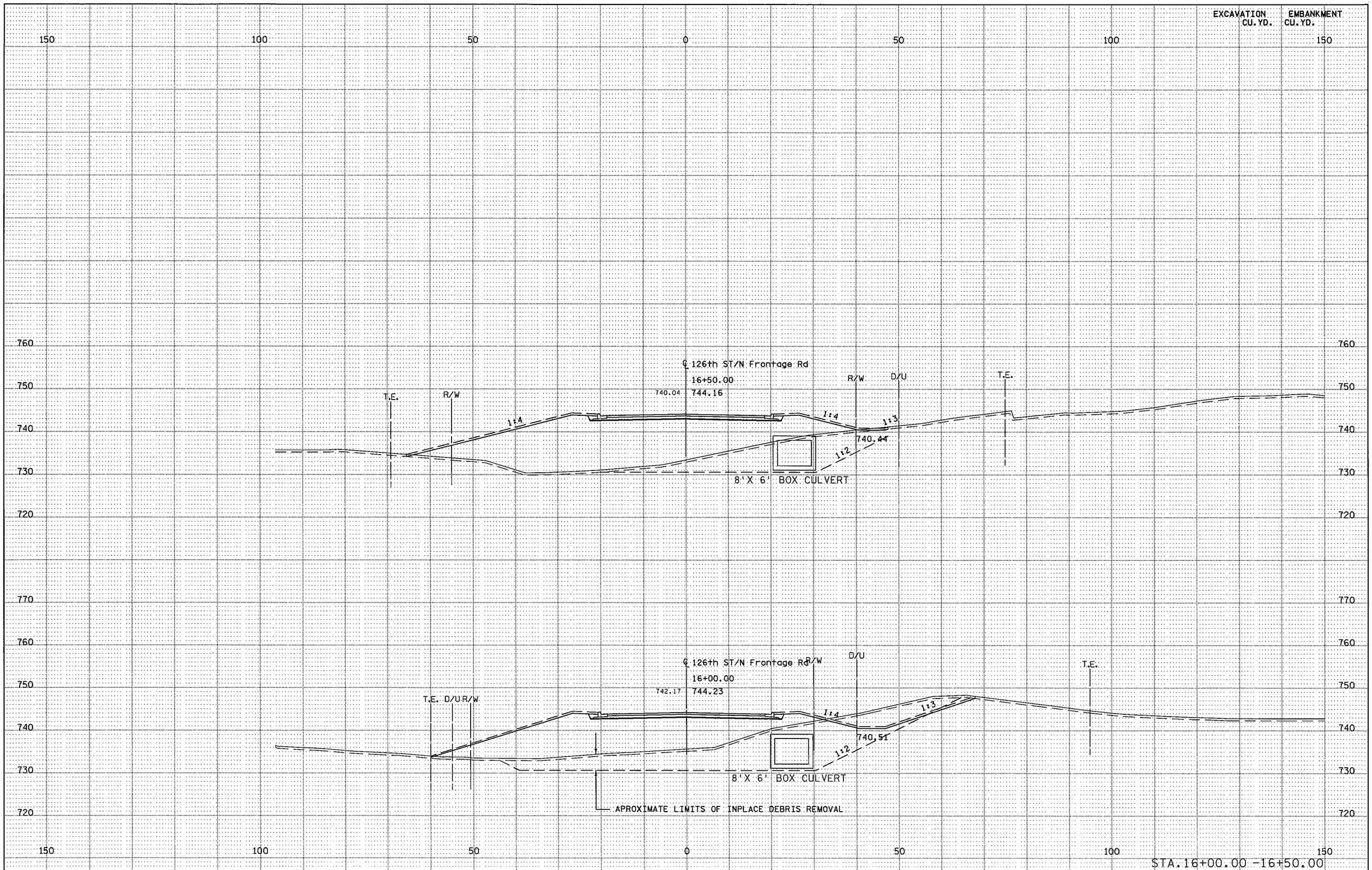

S.P. 179-020-031 S.P. 019-605-028 | STATE PROJ. NO. 1901-148 (TH 1·3) SHEET NO. X97 OF X1·37 SHEETS

DISTRICT #: METRO
IPLOT NAME: d1901148_126th_xpl4
PATH & FILENAME: Projects/DM_ROS/013/1901/148/Design/XS/d1901148_126th_xpl.dgn
PLOTTED/REVISED: 11-JUN-2012 07:33

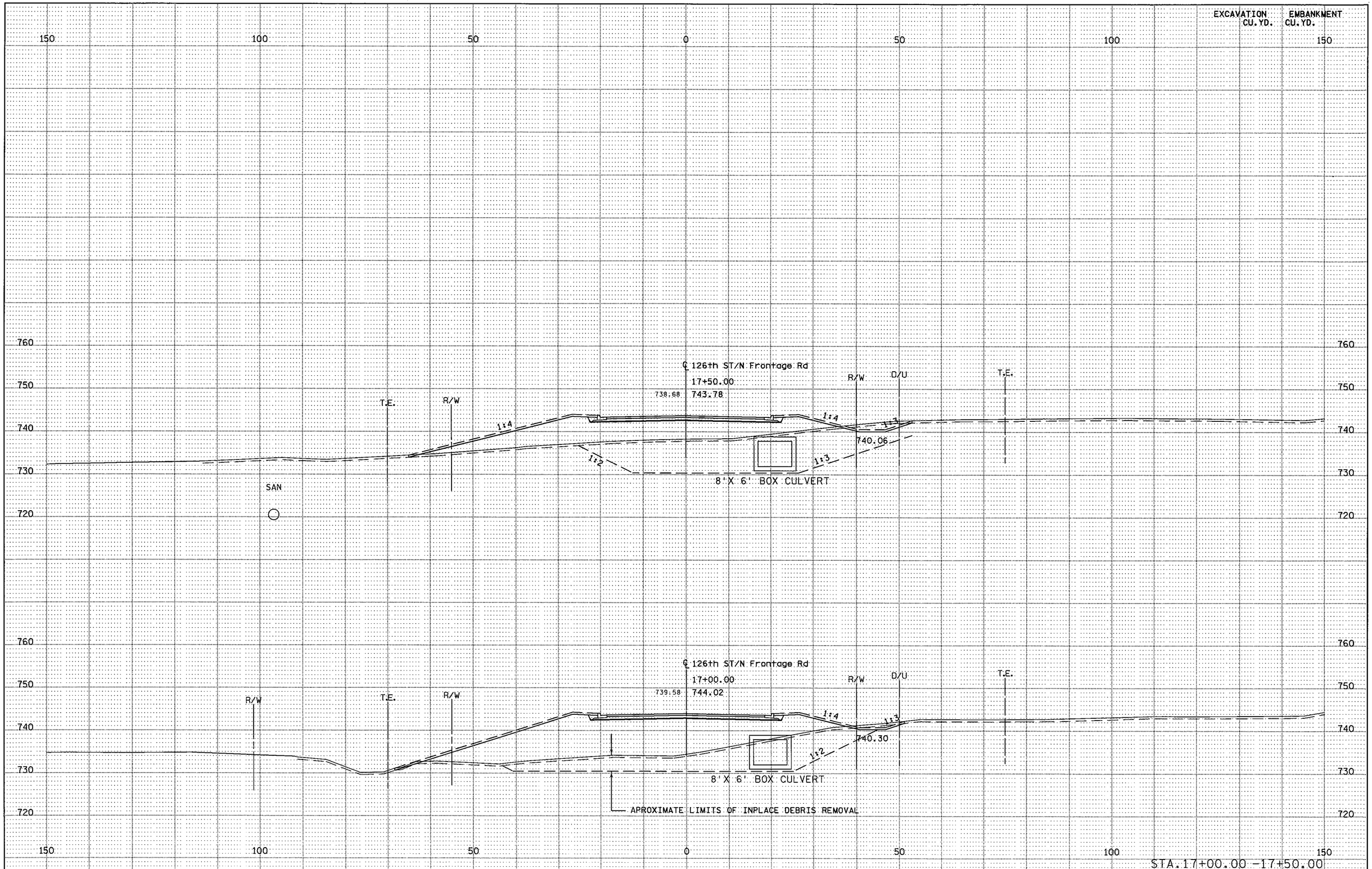

S.P. 179-020-031 S.P. 019-605-028 | STATE PROJ. NO. 1901-148 (TH 13) SHEET NO. X98 OF X137 SHEETS

PLOTTED/REVISED: 11-JUN-2012 07:33

DISTRICT #: METRO
IPLOT NAME: d1901148_126th_xpl5
PATH & FILENAME: Projects/DM_ROS/013/1901/148/Design/XS/d1901148_126th_xpl.dgn

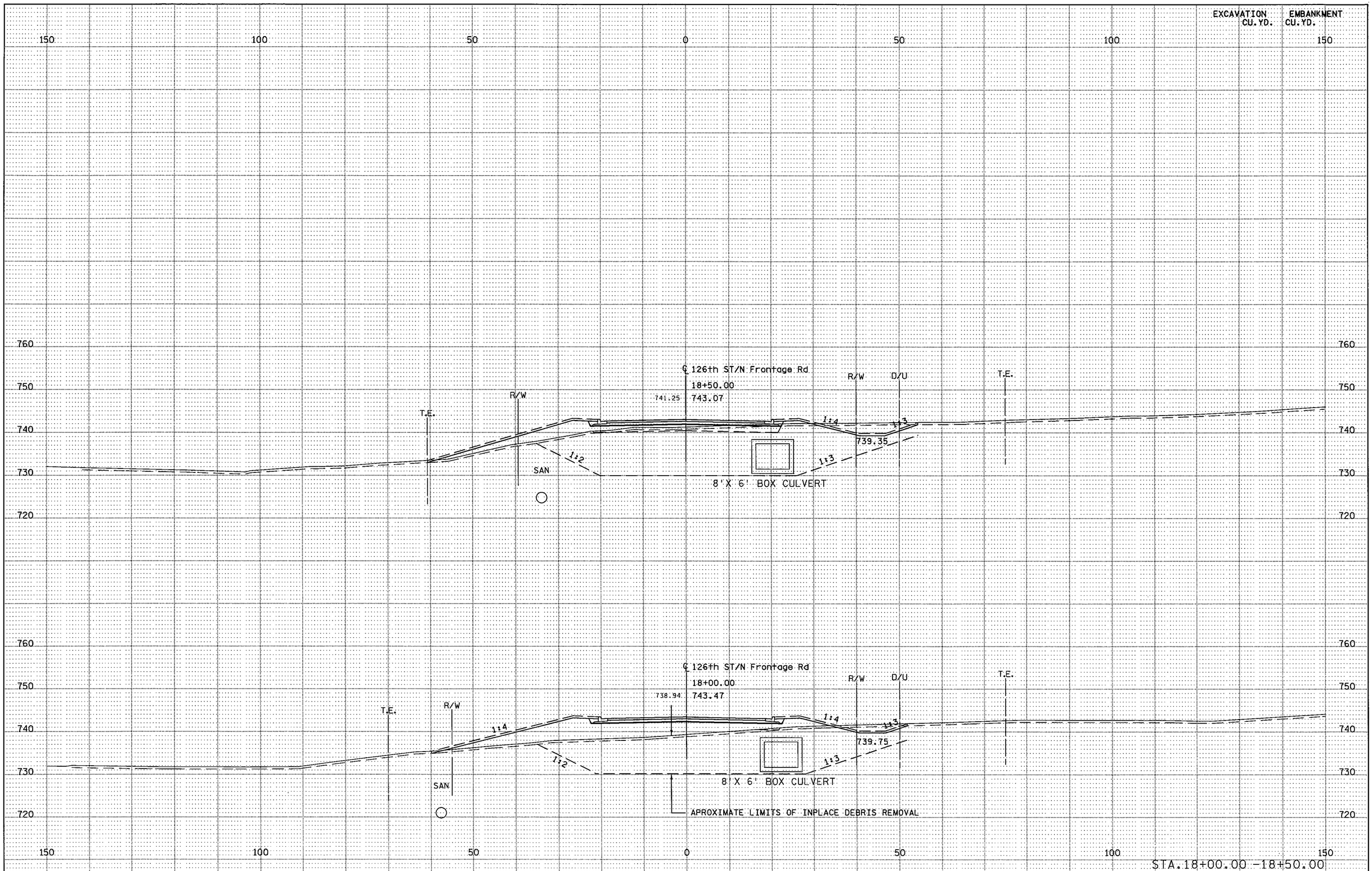

S.P. 179-020-031 S.P. 019-605-028 | STATE PROJ. NO. 1901-148 (TH 13) SHEET NO. X99 OF X137 SHEETS

DISTRICT * : METRO
IPLOT NAME: d1901148_126th_xpl6
PATH & FILENAME: Projects/DM_ROS/013/1901/148/Design/XS/d1901148_126th_xpl.dgn
PLOTTED/REVISED: 11-JUN-2012 07:33

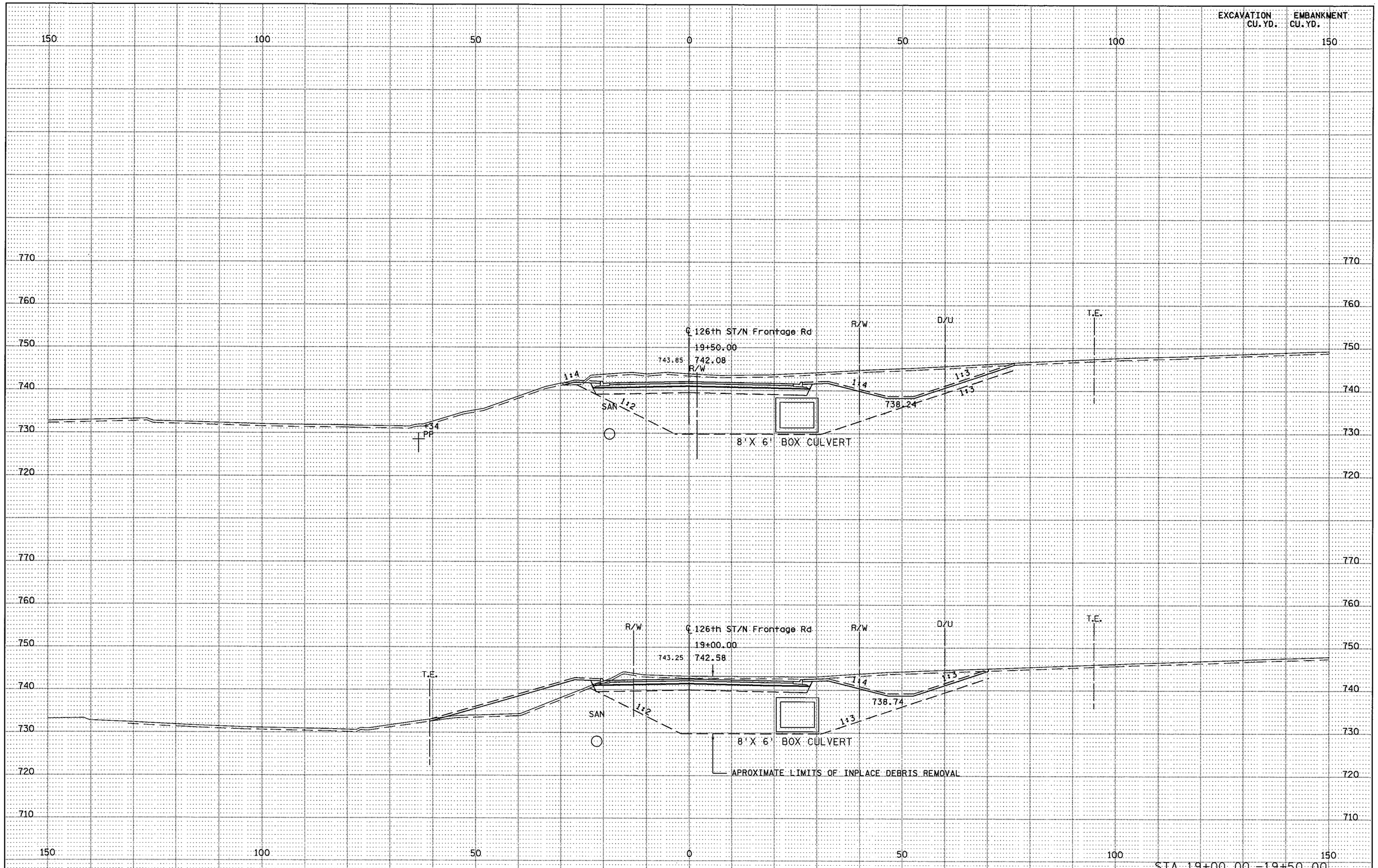

S.P. 179-020-031 S.P. 019-605-028 | STATE PROJ. NO. 1901-148 (TH 13) SHEET NO. X100 OF X137 SHEETS

DISTRICT #: METRO
IPLOT NAME: d1901148_126th_xpl7
PATH & FILENAME: Projects/DM_ROS/013/1901/148/Design/XS/d1901148_126th_xpl.dgn
PLOTTED/REVISED: 11-JUN-2012 07:34

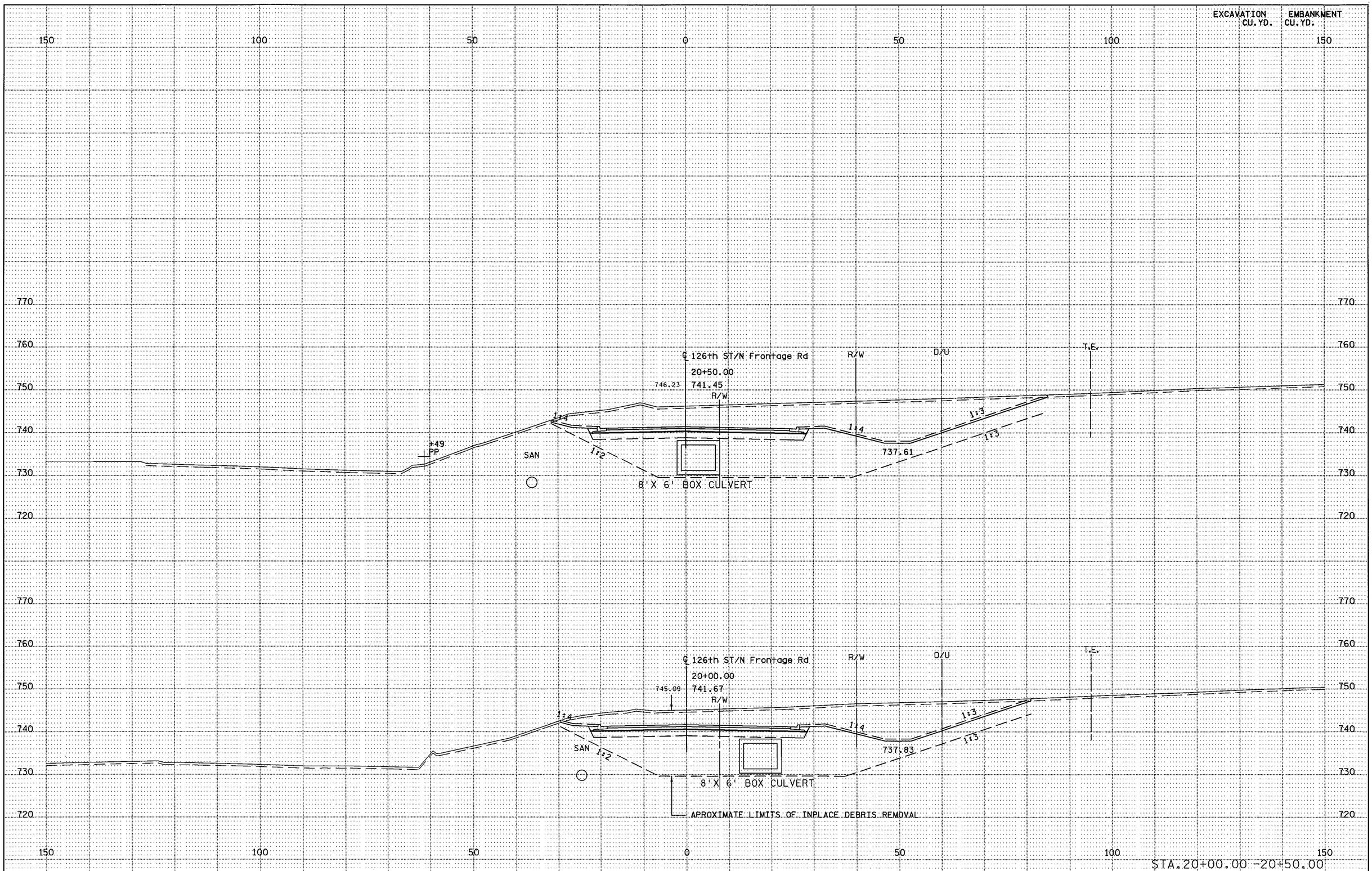

PLOTTED/REVISED: 11-JUN-2012 07:34

DISTRICT # : METRO
IPLOT NAME: d1901148_126th_xpl8
PATH & FILENAME: Projects/DM_ROS/013/1901/148/Design/XS/d1901148_126th_xpl.dgn

S.P. 179-020-031 S.P. 019-605-028 | STATE PROJ. NO. 1901-148 (TH 1·3) SHEET NO. X1·01 OF X1·37 SHEETS

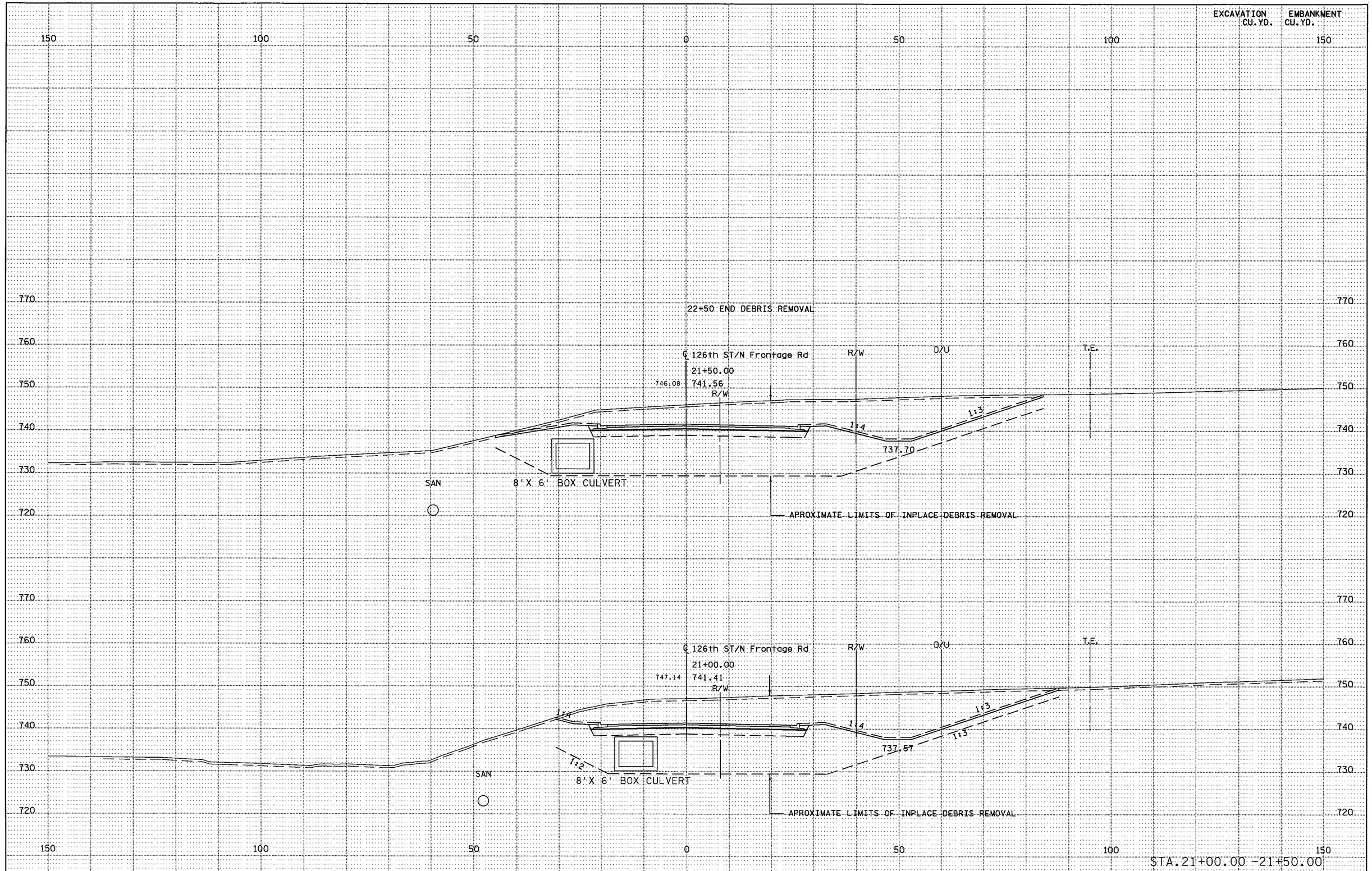

S.P. 179-020-031 S.P. 019-605-028 | STATE PROJ. NO. 1901-148 (TH 1·3) SHEET NO. X1·02 OF X1·37 SHEETS

PLOTTED/REVISED: 11-JUN-2012 07:34

DISTRICT #: METRO
IPLOT NAME: d1901148_126th_xpl9
PATH & FILENAME: Projects/DM_ROS/013/1901/148/Design/XS/d1901148_126th_xpl.dgn

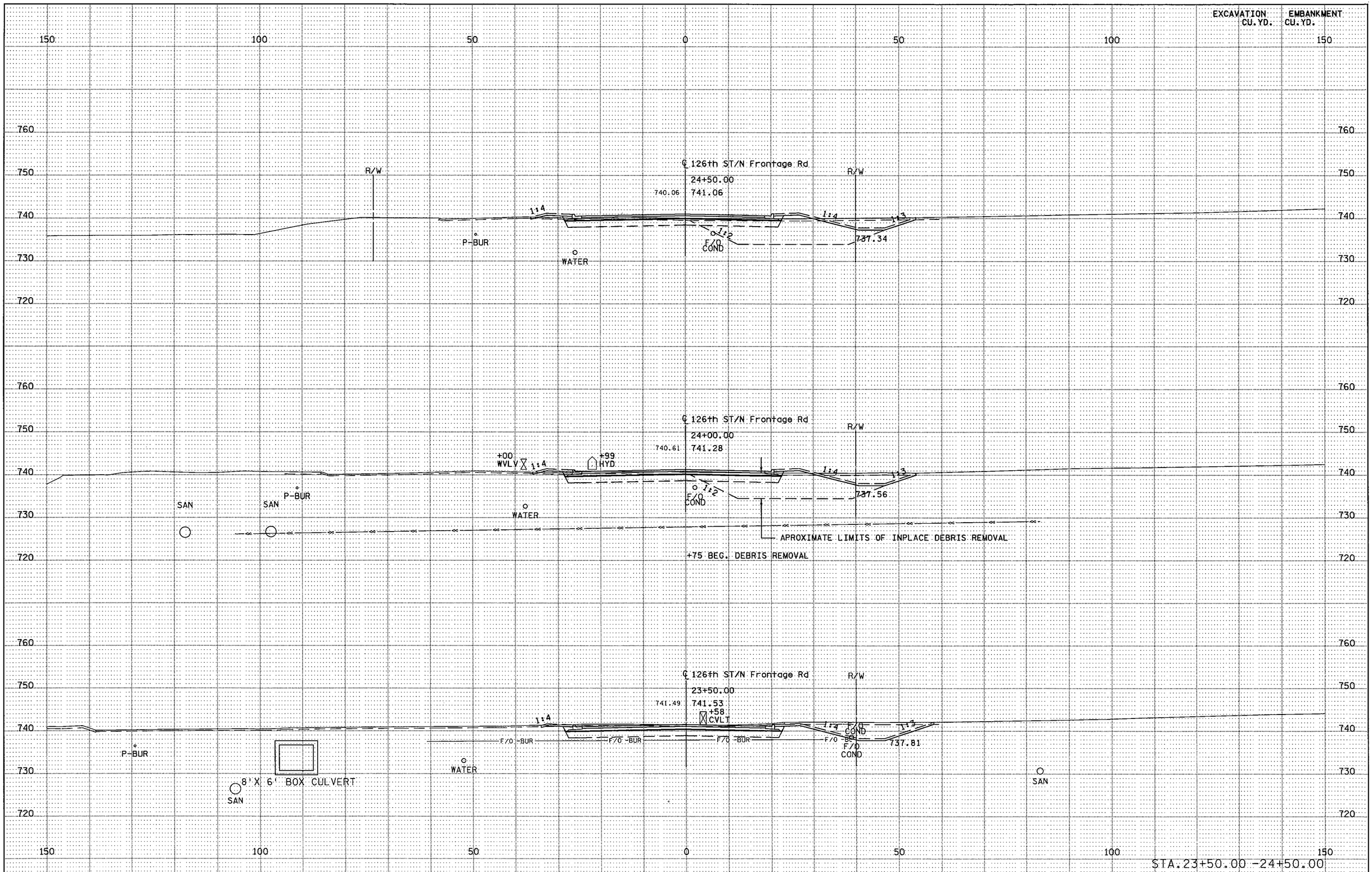

S.P. 179-020-031 S.P. 019-605-028 | STATE PROJ. NO. 1901-148 (TH 1-3) SHEET NO. X1-03 OF X1-37 SHEETS

DISTRICT # : METRO
IPLOT NAME: d190148_126th_xpl10
PATH & FILENAME: Projects/DM_ROS/013/190/148/Design/XS/d190148_126th_xpl.dgn
PLOTTED/REVISED: 11-JUN-2012 07:34

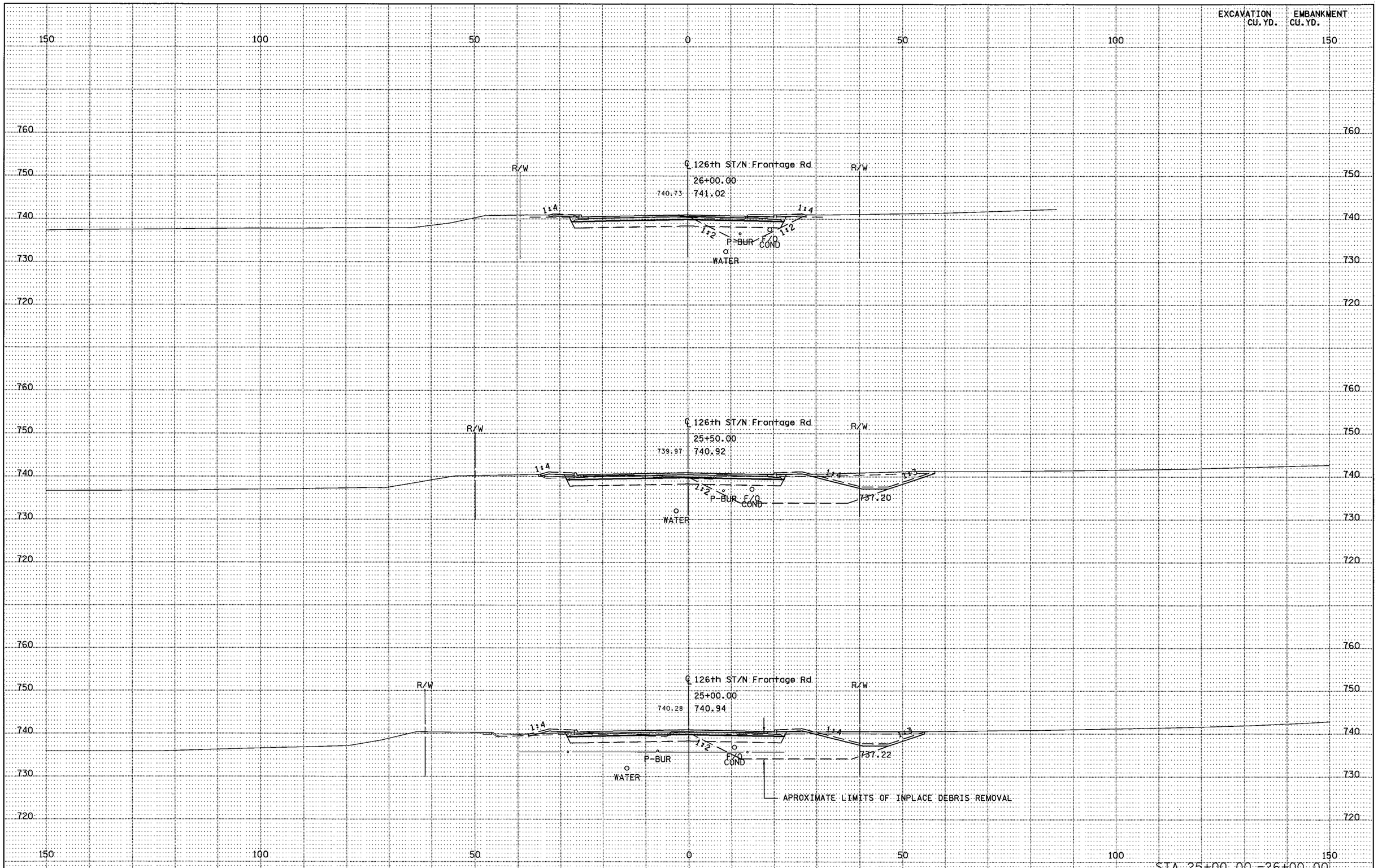

PLOTTED/REVISED: 11-JUN-2012 07:34

DISTRICT * : METRO
IPLOT NAME: d1901148_126th_xpIII
PATH & FILENAME: Projects/DM_ROS/013/1901/148/Design/XS/d1901148_126th_xpl.dgn

S.P. 179-020-031 S.P. 019-605-028 | STATE PROJ. NO. 1901-148 (TH 1·3) SHEET NO. X1·04 OF X1·37 SHEETS

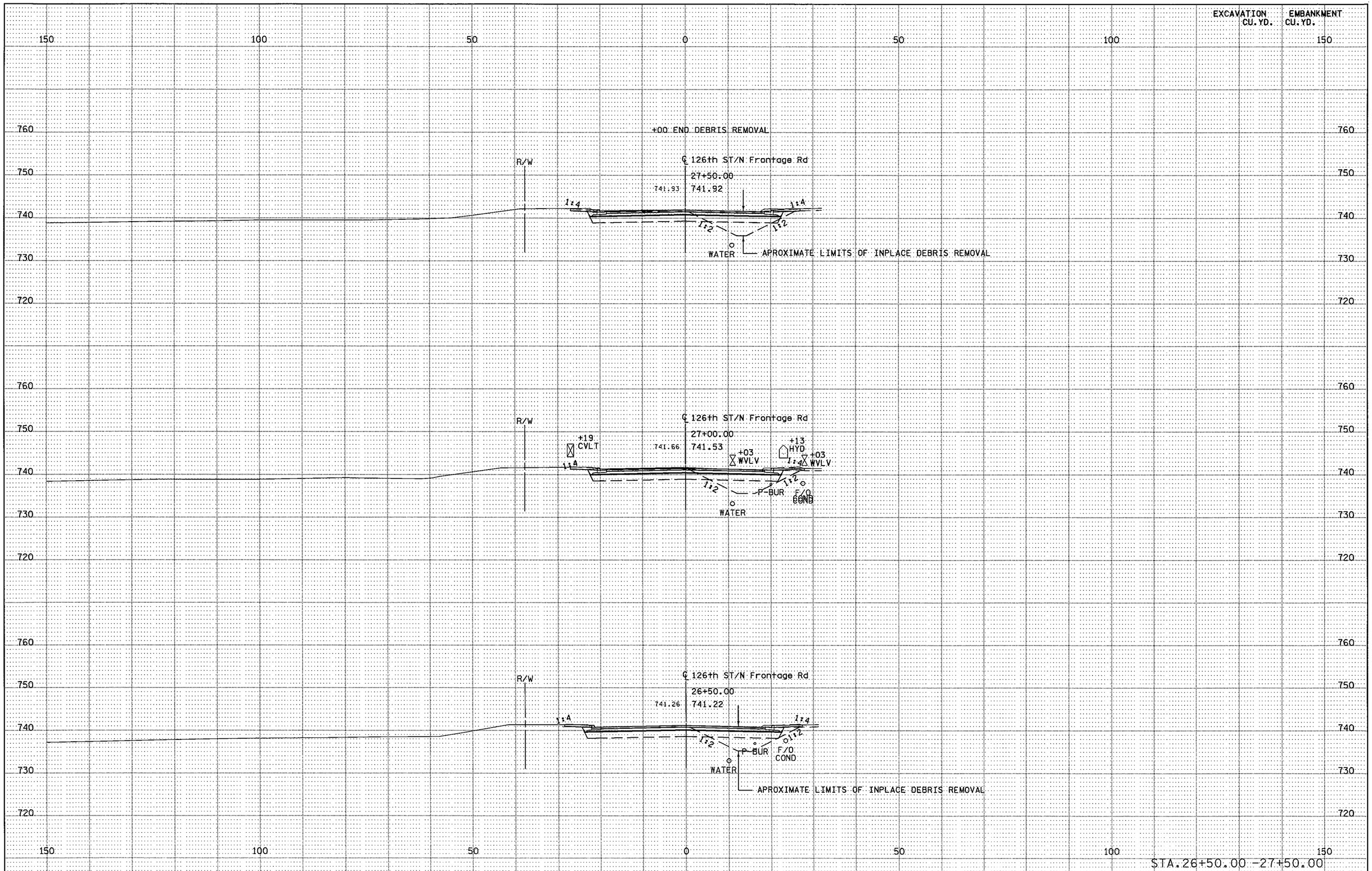

S.P. 179-020-031 S.P. 019-605-028 | STATE PROJ. NO. 1901-148 (TH 13) SHEET NO. X105 OF X137 SHEETS

PLOTTED/REVISED: 11-JUN-2012 07:34
DISTRICT * : METRO
IPLOT NAME: d190ll48_126th_xpl12
PATH & FILENAME: Projects/DM_ROS/013/190l/148/Design/XS/d190ll48_126th_xpl.dgn

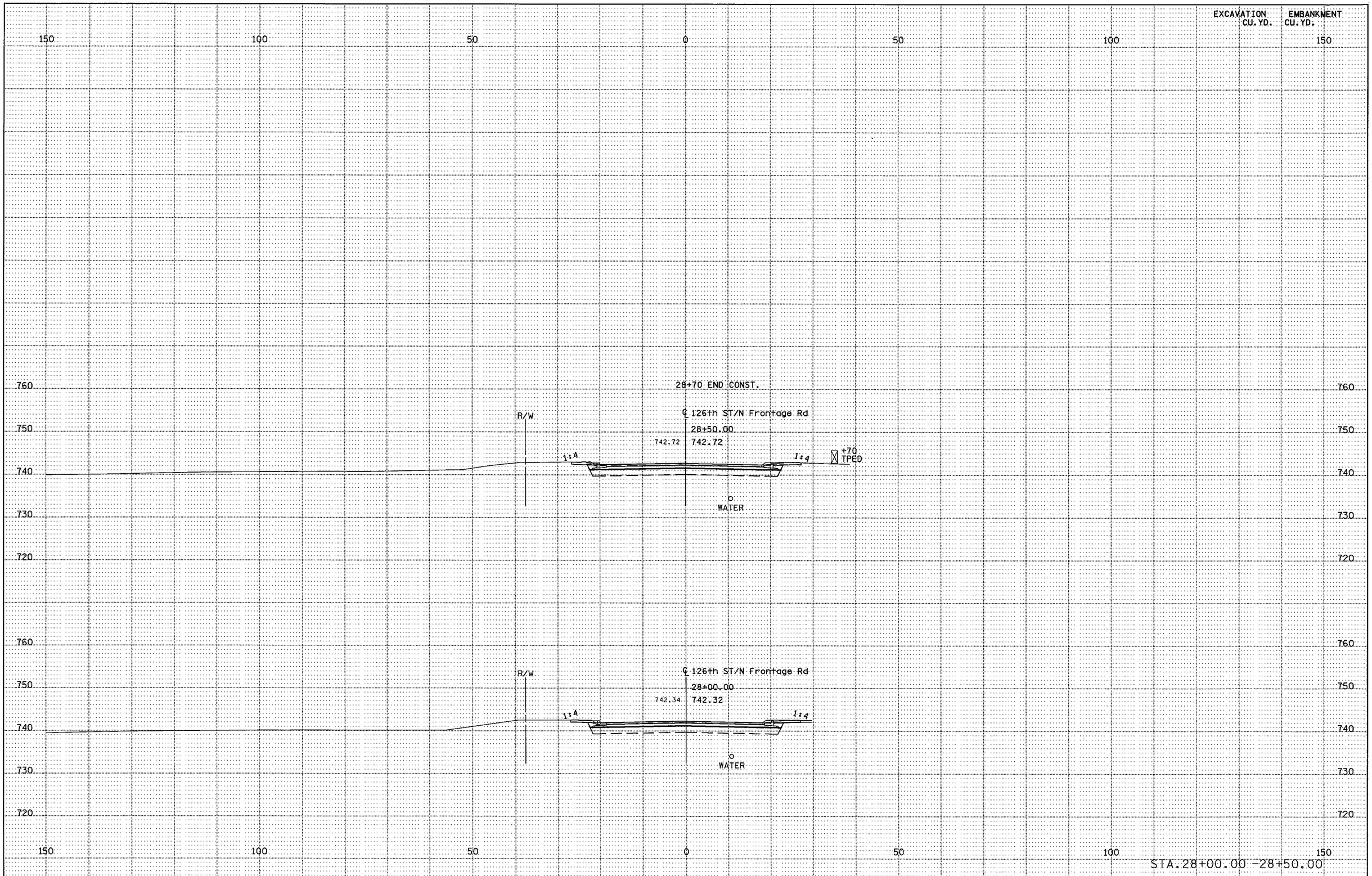

DISTRICT #: METRO
IPLOT NAME: d1901148_126th_xpl13
PATH & FILENAME: Projects/DM_ROS/013/1901/148/Design/XS/d1901148_126th_xpl.dgn
PLOTTED/REVISED: 11-JUN-2012 07:34

S.P. 179-020-031 S.P. 019-605-028 | STATE PROJ. NO. 1901-148 (TH 13) SHEET NO. X106 OF X137 SHEETS

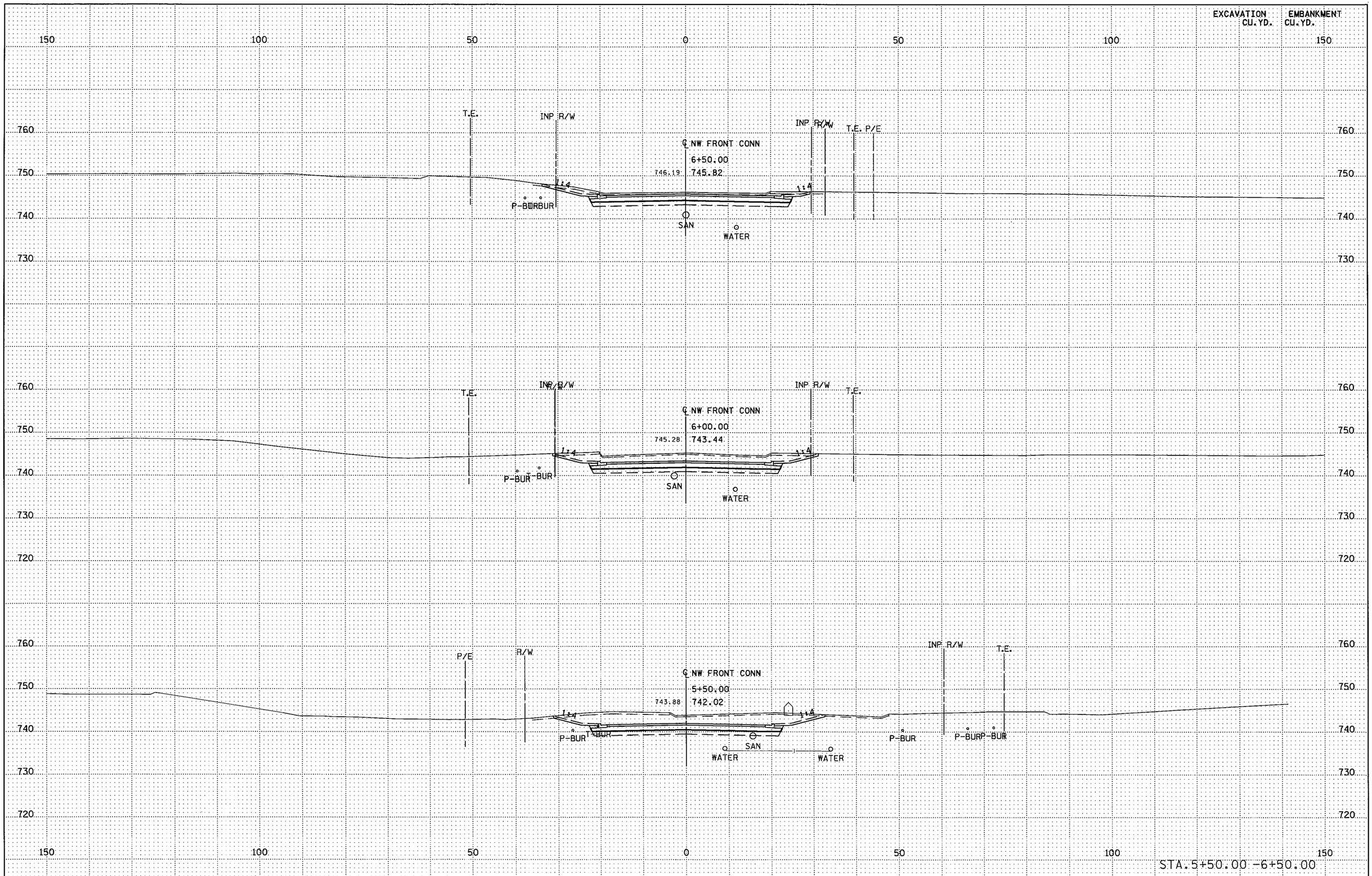

S.P. 179-020-031 S.P. 019-605-028

STATE PROJ. NO. 1901-148 (TH 13) SHEET NO. X1.07 OF X1.37 SHEETS

DISTRICT #: METRO
IPLOT NAME: d1901148_nwfront_xpl
PATH & FILENAME: Projects/DM_ROS/013/1901/148/Design/XS/d1901148_nwfront_xpl.dgn
PLOTTED/REVISED: 11-JUN-2012 07:38

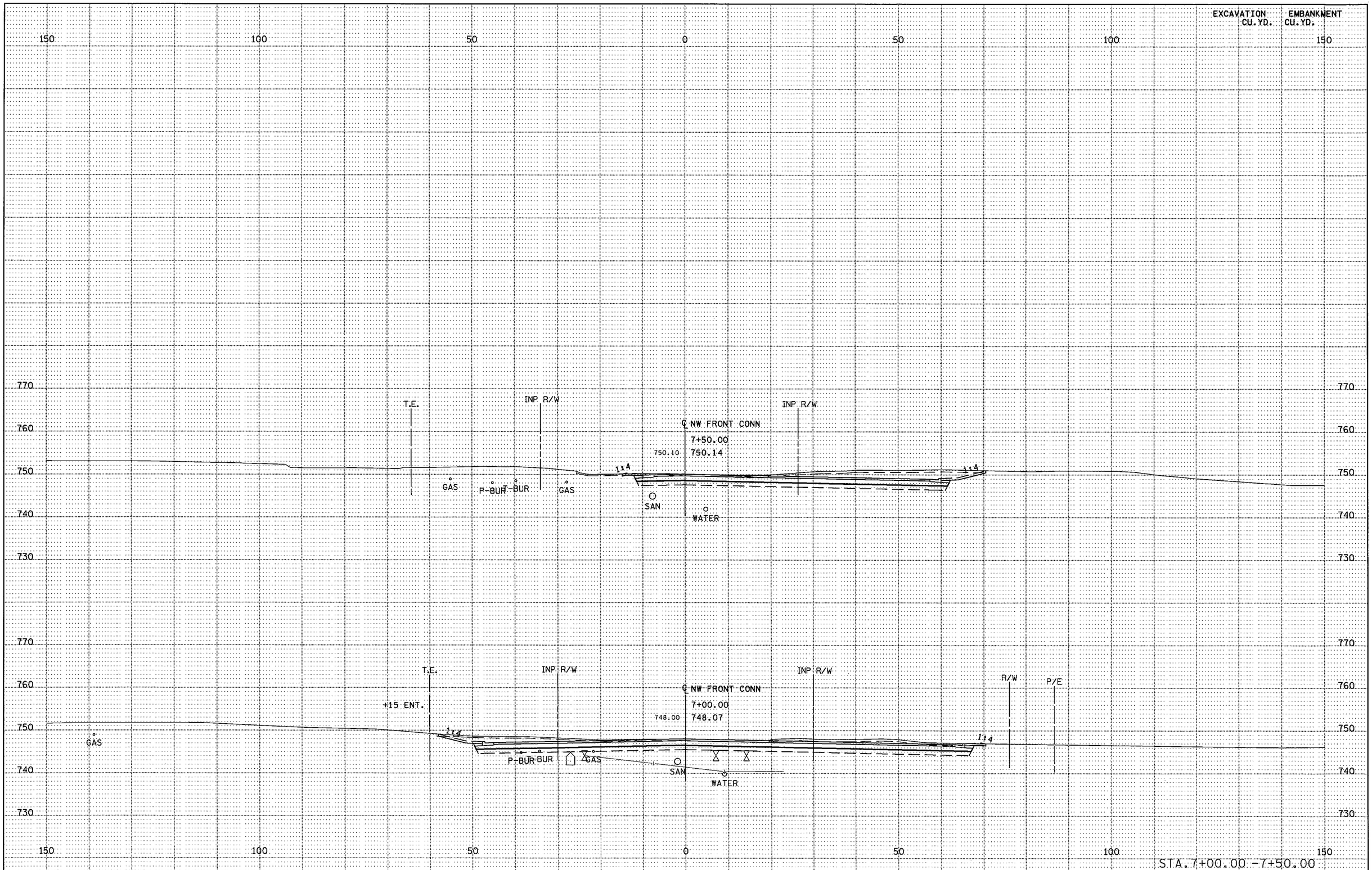

S.P. 179-020-031 S.P. 019-605-028

STATE PROJ. NO. 1901-148 (TH 1·3) SHEET NO. X1·08 OF X1·37 SHEETS

DISTRICT # : METRO
IPLOT NAME: d1901148_nwfront_xpll
PATH & FILENAME: Projects/DM_ROS/013/1901/148/Design/XS/d1901148_nwfront_xpl.dgn
PLOTTED/REVISED: 11-JUN-2012 07:38

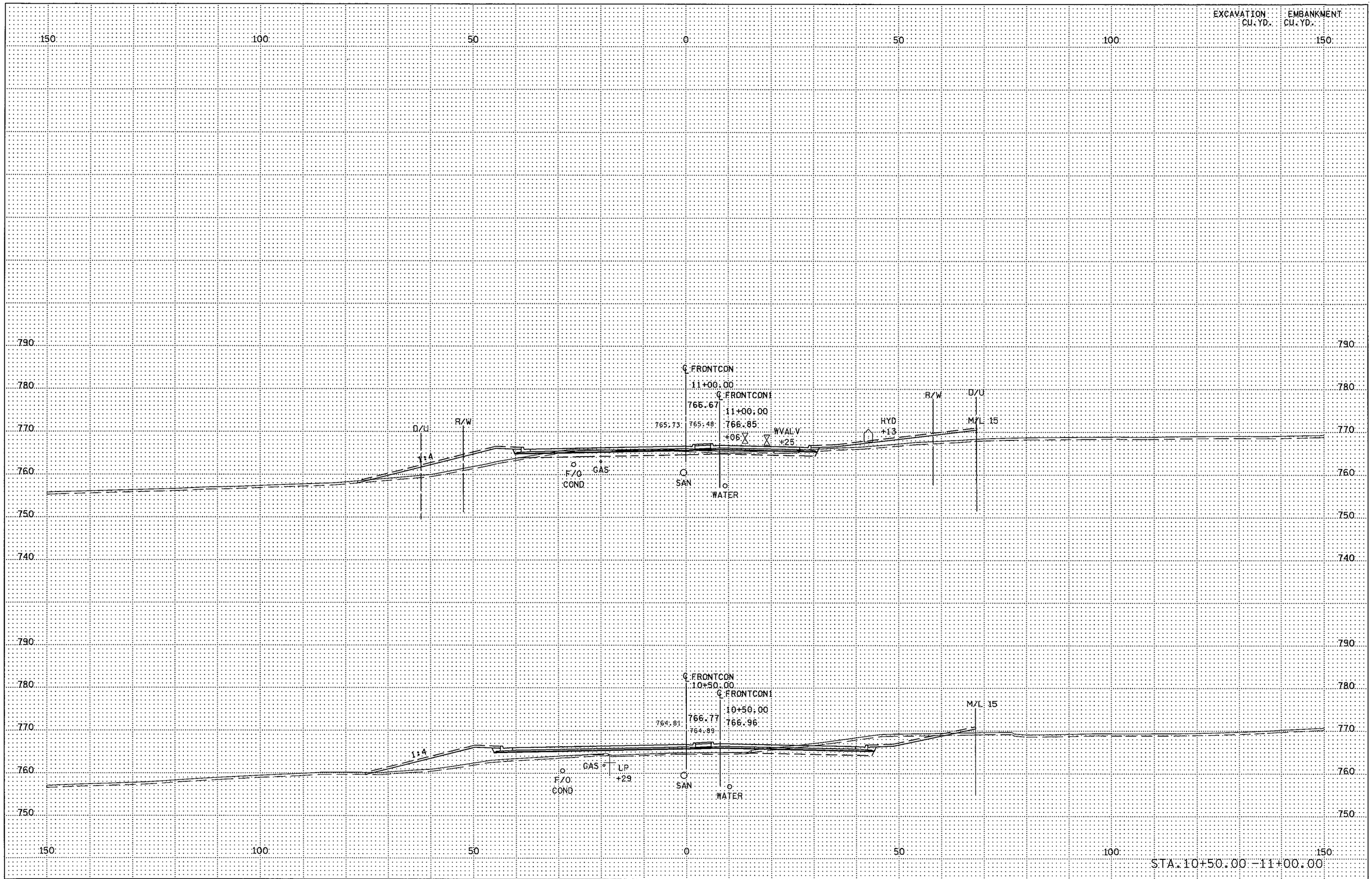

DISTRICT * : METRO
IPLOT NAME: d1901148_frontcon_xpl
PATH & FILENAME: Projects/DM_ROS/013/1901/148/Design/XS/d1901148_frontcon_xpl.dgn

PLOTTED/REVISED: 11-JUN-2012 07:39

S.P. 179-020-031 S.P. 019-605-028

STATE PROJ. NO. 1901-148 (TH 13) SHEET NO. X109 OF X137 SHEETS

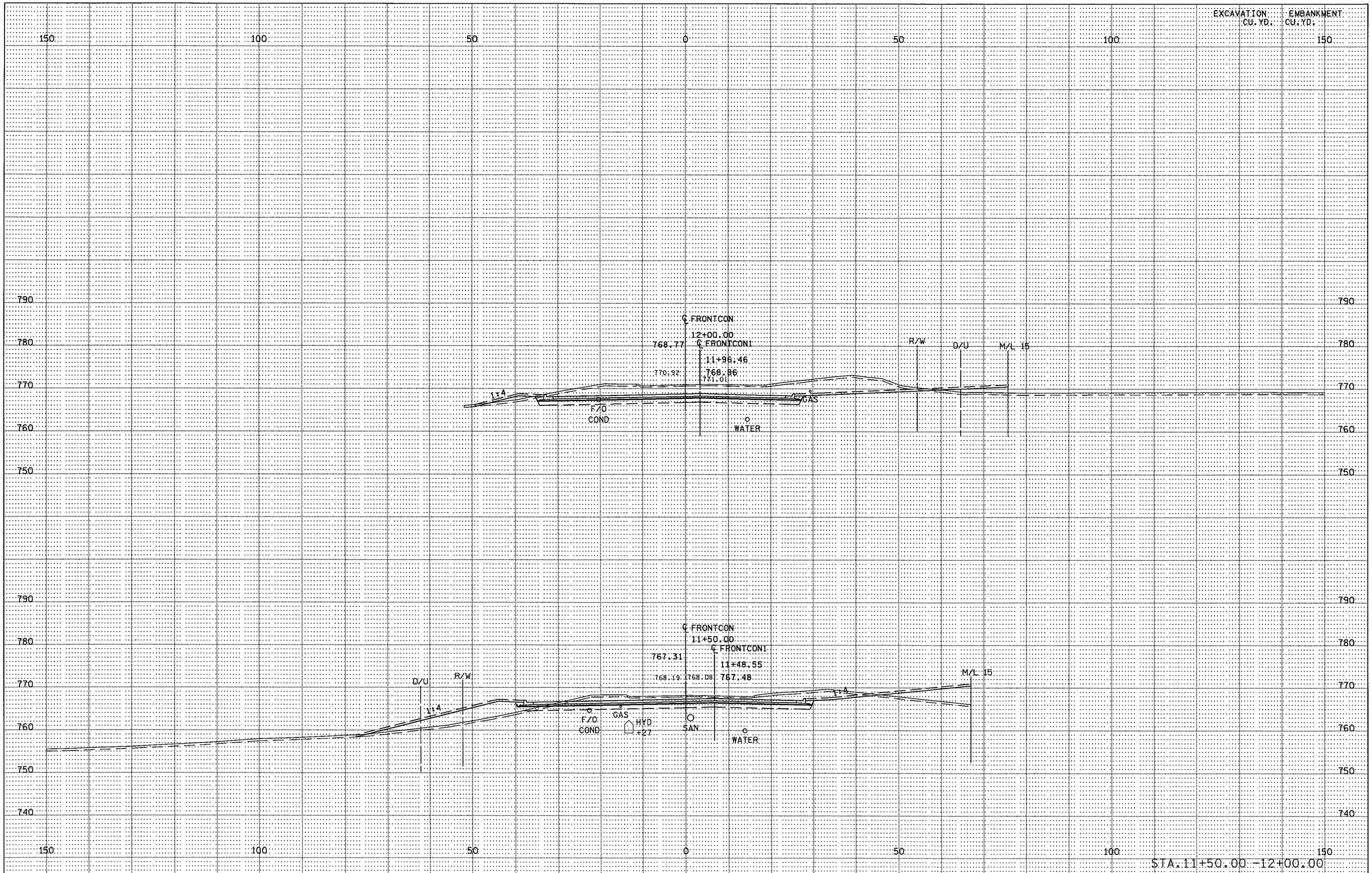

S.P. 179-020-031 S.P. 019-605-028

STATE PROJ. NO. 1901-148 (TH 13) SHEET NO. X110 OF X137 SHEETS

PLOTTED/REVISED: 11-JUN-2012 07:39

DISTRICT * : METRO
IPLOT NAME: d1901148_frontcon_xpll
PATH & FILENAME: Projects/DM_ROS/013/1901/148/Design/XS/d1901148_frontcon_xpl.dgn

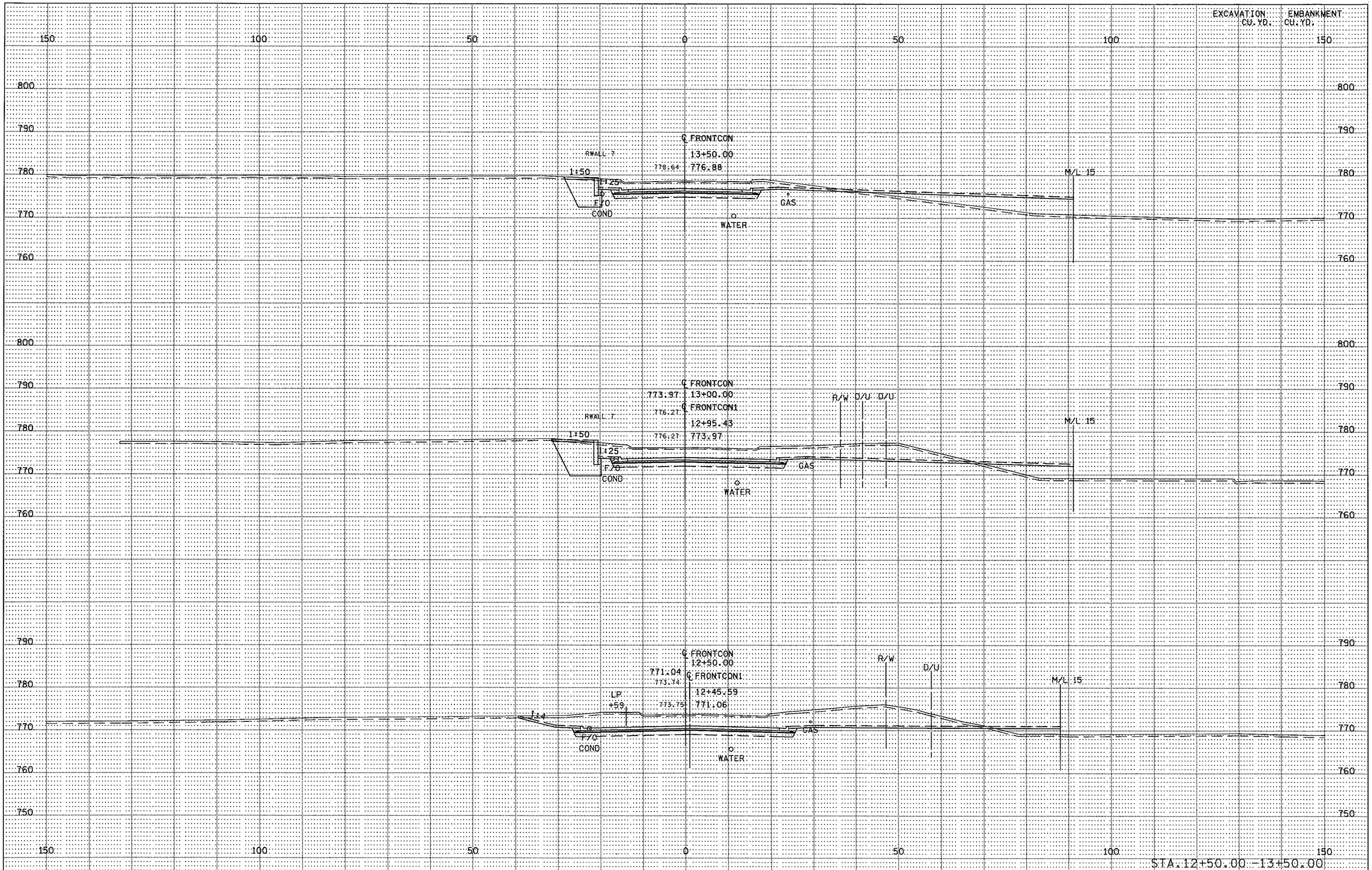

PLOTTED/REVISED: 11-JUN-2012 07:39

DISTRICT *: METRO
IPLOT NAME: d1901148_frontcon_xpl2
PATH & FILENAME: Projects/DM_ROS/013/1901/148/Design/XS/d1901148_frontcon_xpl.dgn

S.P. 179-020-031 S.P. 019-605-028 | STATE PROJ. NO. 1901-148 (TH 13) SHEET NO. X111 OF X137 SHEETS

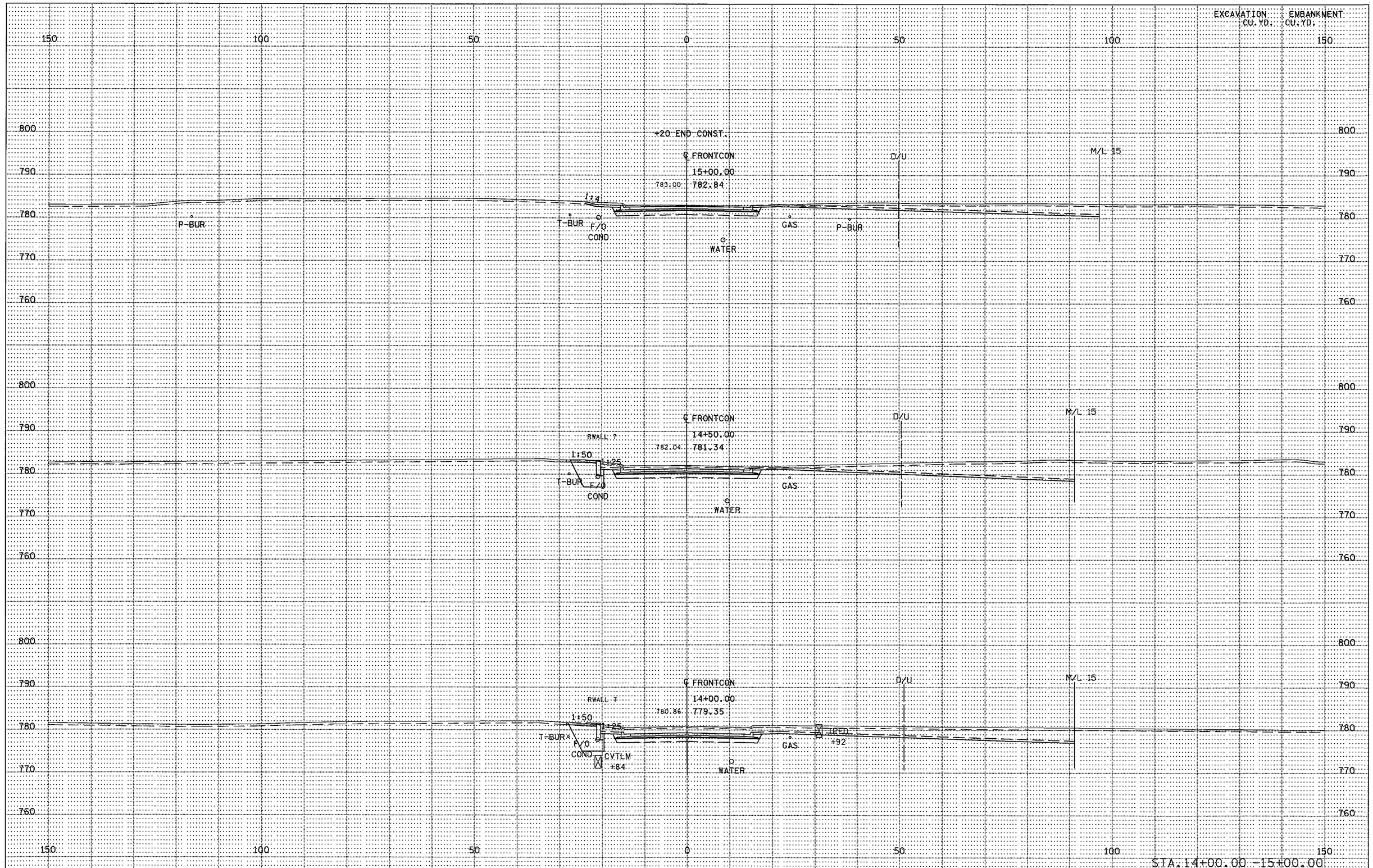

S.P. 179-020-031 S.P. 019-605-028 | STATE PROJ. NO. 1901-148 (TH 13) SHEET NO. X112 OF X137 SHEETS

DISTRICT •: METRO
IPLOT NAME: d190l148_frontcon_xpl3
PATH & FILENAME: Projects/DM_ROS/013/190l/148/Design/XS/d190l148_frontcon_xpl.dgn
PLOTTED/REVISED: 11-JUN-2012 07:39

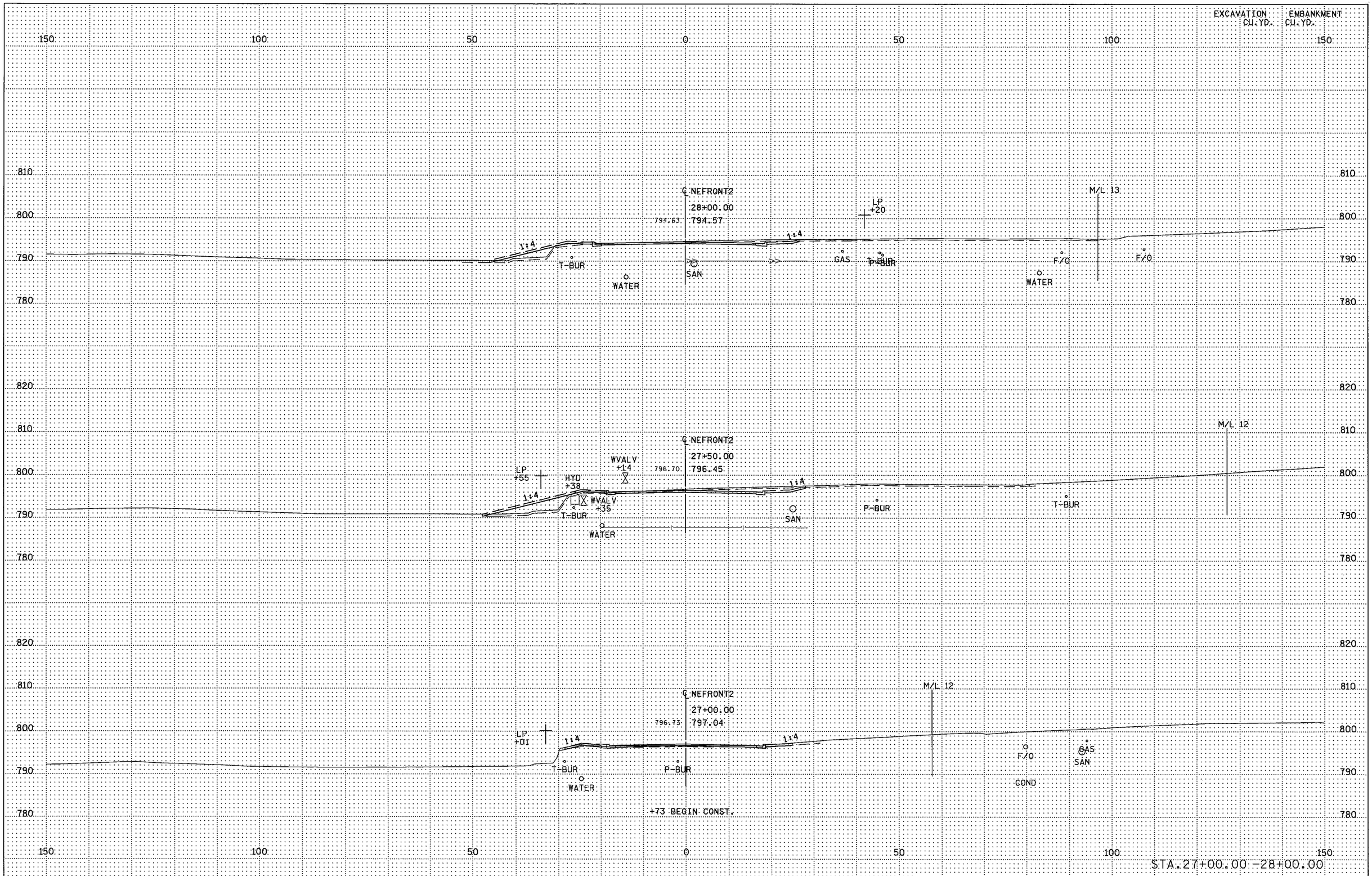

PLOTTED/REVISED: 11-JUN-2012 07:40

DISTRICT * : METRO
IPLOT NAME: d1901148_nefront2_xpl
PATH & FILENAME: Projects/DM_ROS/013/1901/148/Design/XS/d1901148_nefront2_xpl.dgn

S.P. 179-020-031 S.P. 019-605-028 | STATE PROJ. NO. 1901-148 (TH 13) SHEET NO. X1.13 OF X1.37 SHEETS

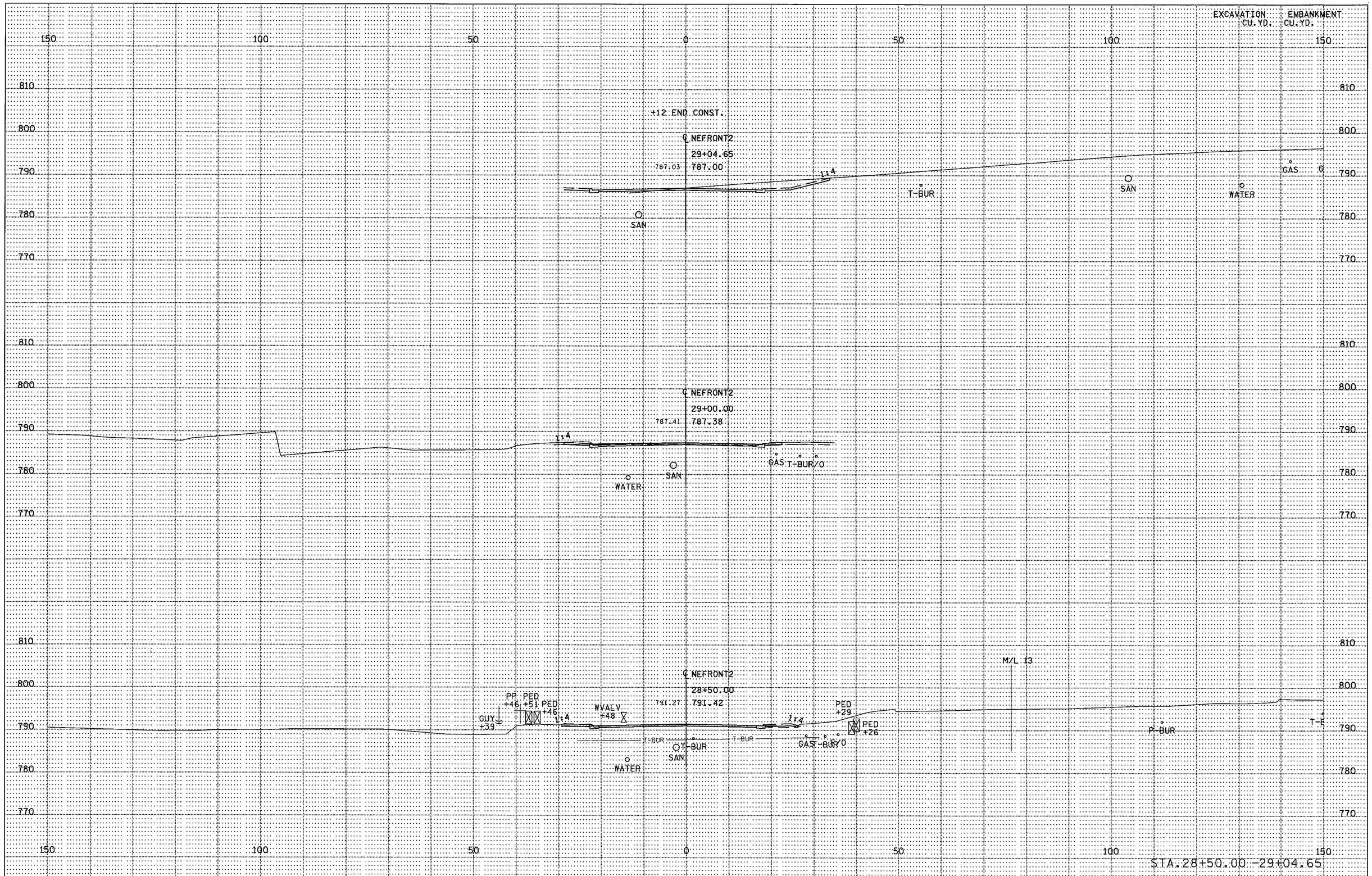

S.P. 179-020-031 S.P. 019-605-028 | STATE PROJ. NO. 1901-148 (TH 13) SHEET NO. X1.14 OF X1.37 SHEETS

PLOTTED/REVISED: 11-JUN-2012 07:40

DISTRICT •: METRO
IPLOT NAME: d1901148_nefront2_xpll
PATH & FILENAME: Projects/DM_R05/013/1901/148/Design/XS/d1901148_nefront2_xpl.dgn

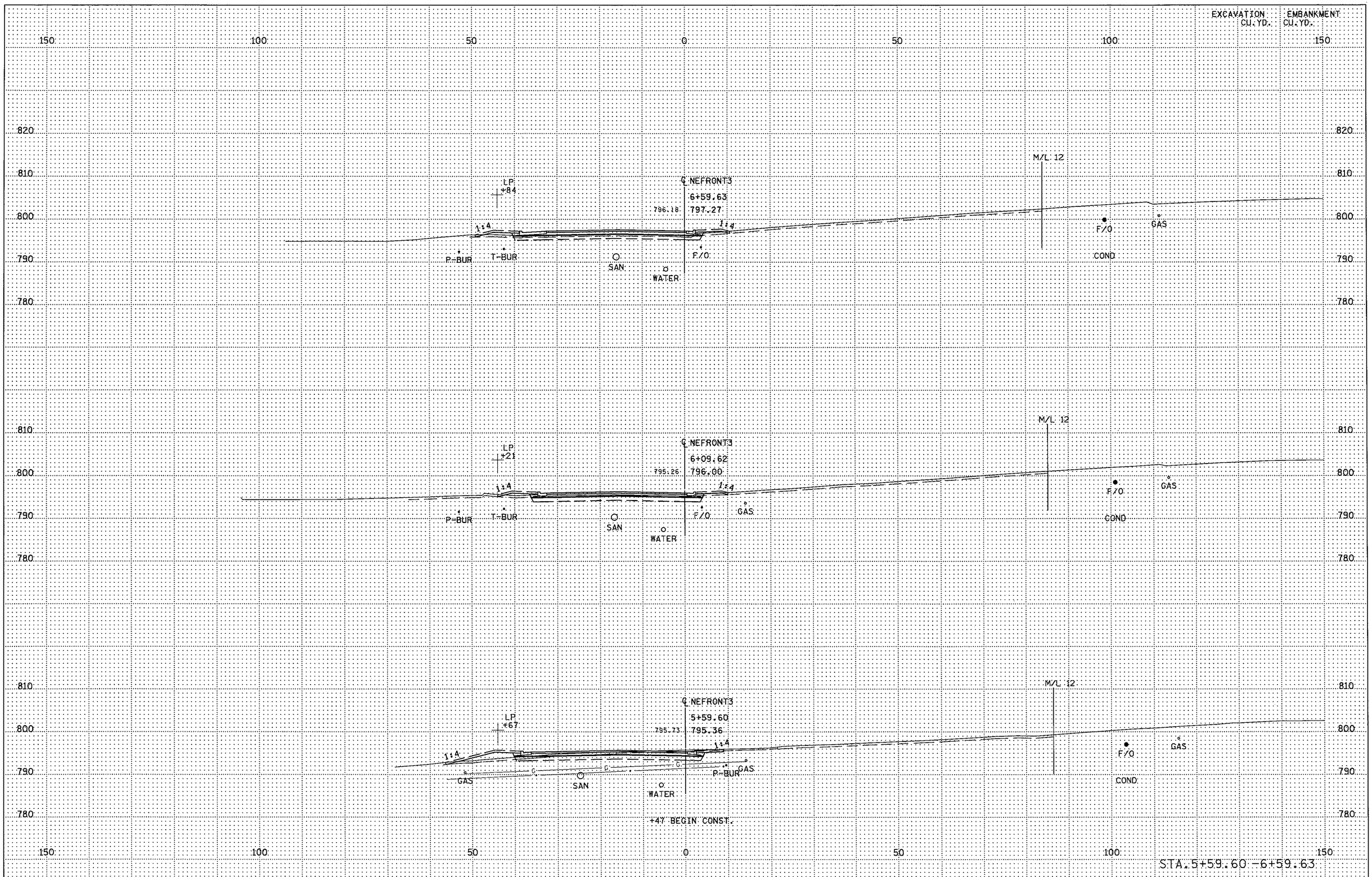

PLOTTED/REVISED: 11-JUN-2012 07:49

DISTRICT • : METRO
IPLOT NAME: d1901148_nefront3_xpl
PATH & FILENAME: Projects/DM_ROS/013/1901/148/Design/XS/d1901148_nefront3_xpl.dgn

S.P. 179-020-031 S.P. 019-605-028 | STATE PROJ. NO. 1·3 (TH 1·3) SHEET NO. X1·15 OF X1·37 SHEETS

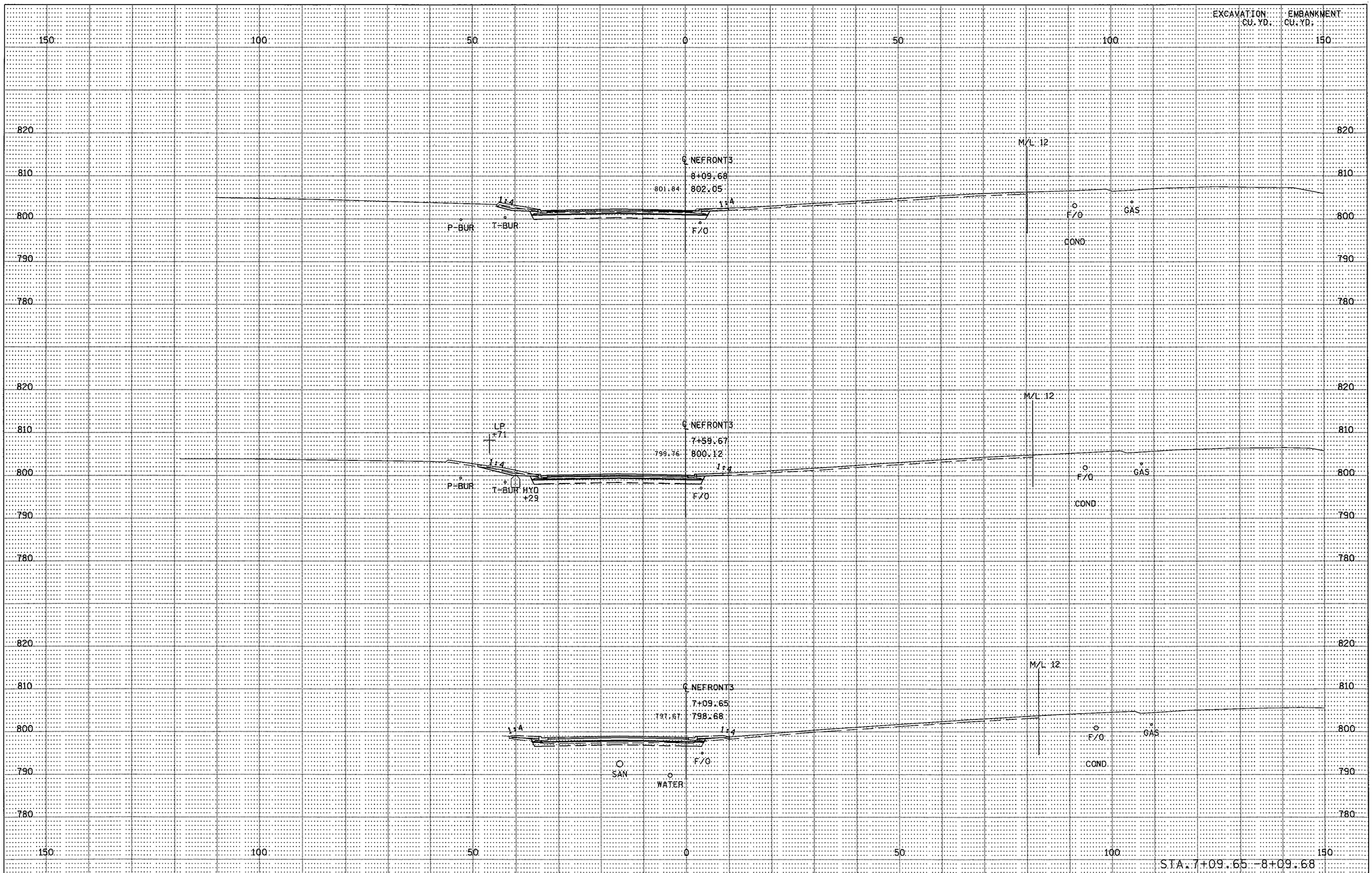

PLOTTED/REVISED: 11-JUN-2012 07:50

DISTRICT * : METRO
IPLOT NAME: d1901148_nefront3_xpl
PATH & FILENAME: Projects/DM_ROS/013/1901/148/Design/XS/d1901148_nefront3_xpl.dgn

S.P. 179-020-031 S.P. 019-605-028 | STATE PROJ. NO. 1·3 (TH 1·3) SHEET NO. X1·16 OF X1·37 SHEETS

DISTRICT *: METRO
IPLOT NAME: d190ll48_nefront3_xpl
PATH & FILENAME: Projects/DM_ROS/013/190l/148/Design/XS/d190ll48_nefront3_xpl.dgn
PLOTTED/REVISED: 11-JUN-2012 07:50

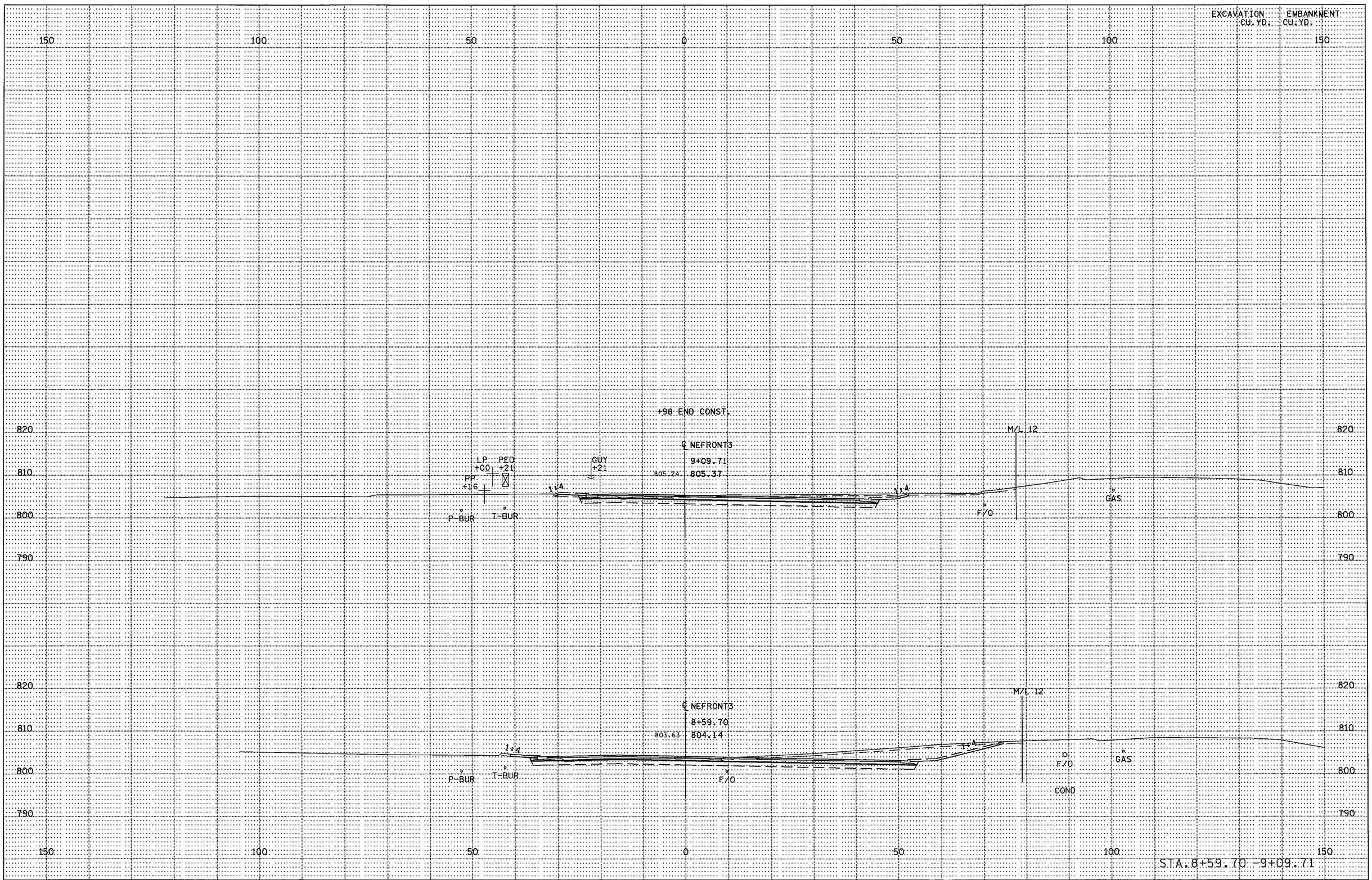

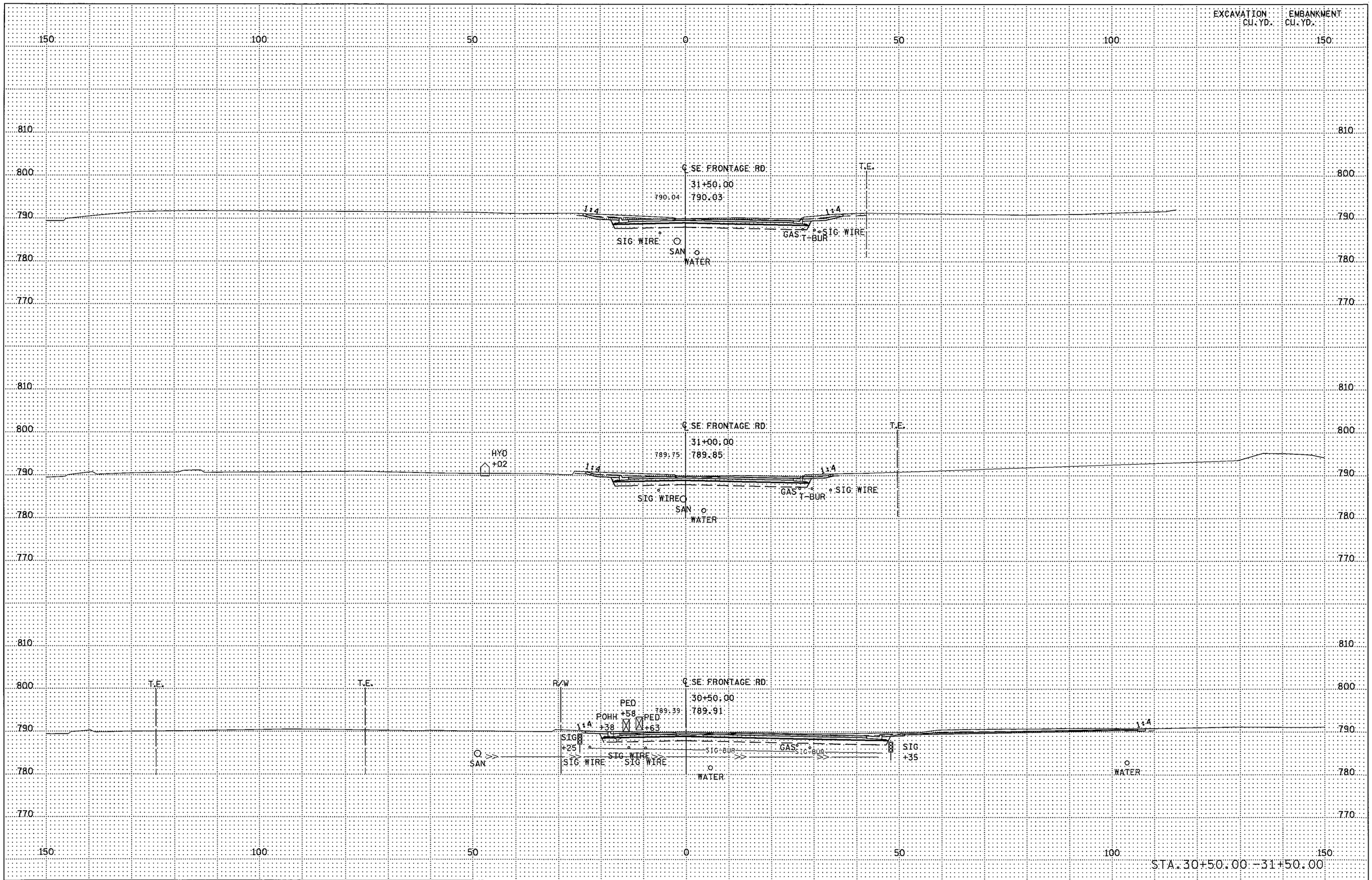

PLOTTED/REVISED: 11-JUN-2012 07:43

DISTRICT #: METRO
IPLOT NAME: d1901148_sefront_xpl
PATH & FILENAME: Projects/DM_ROS/013/1901/148/Design/XS/d1901148_sefront_xpl.dgn

S.P. 179-020-031 S.P. 019-605-028 | STATE PROJ. NO. 1901-148 (TH 13) SHEET NO. X118 OF X137 SHEETS

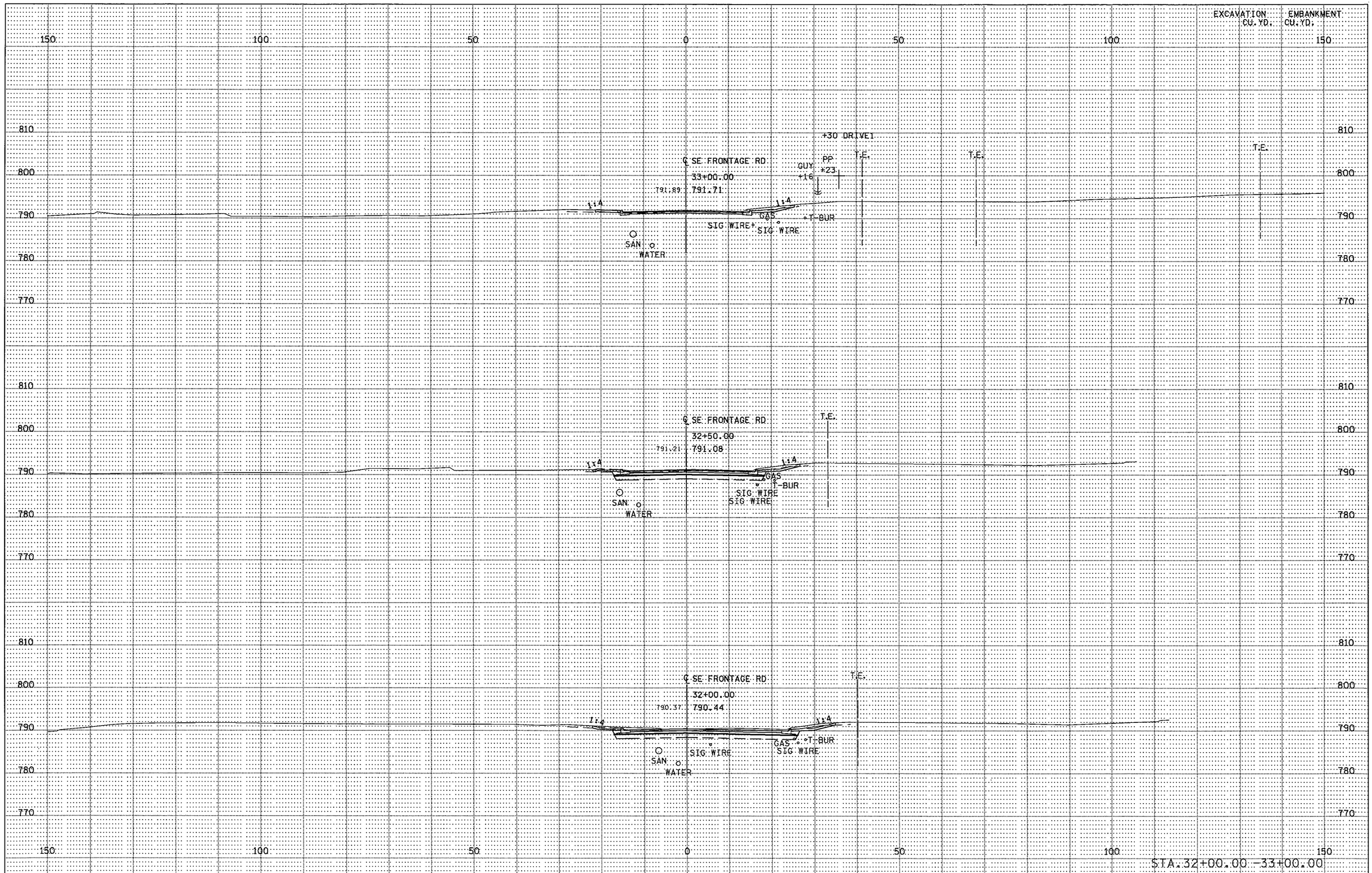

S.P. 179-020-031 S.P. 019-605-028 | STATE PROJ. NO. 1901-148 (TH 13) SHEET NO. X119 OF X137 SHEETS

DISTRICT •: METRO
IPLOT NAME: d190ll48_sefront_xpll
PATH & FILENAME: Projects/DM_ROS/013/190l/148/Design/XS/d190ll48_sefront_xpl.dgn
PLOTTED/REVISED: 11-JUN-2012 07:43

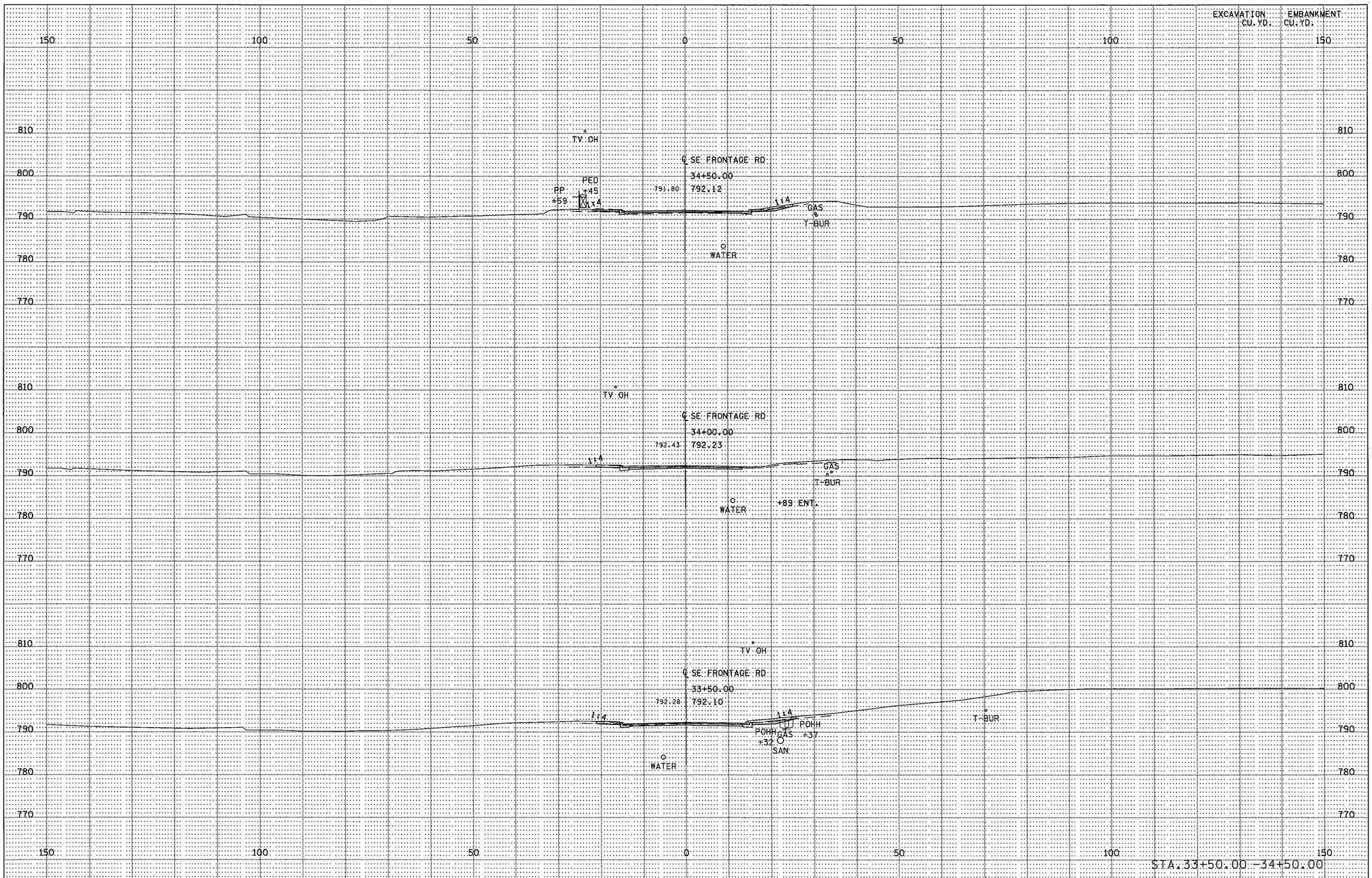

PLOTTED/REVISED: 11-JUN-2012 07:43

DISTRICT *: METRO
IPLOT NAME: d1901148_sefront_xpl2
PATH & FILENAME: Projects/DM_ROS/013/1901/148/Design/XS/d1901148_sefront_xpl.dgn

S.P. 179-020-031 S.P. 019-605-028 | STATE PROJ. NO. 1901-148 (TH 13) SHEET NO. X120 OF X137 SHEETS

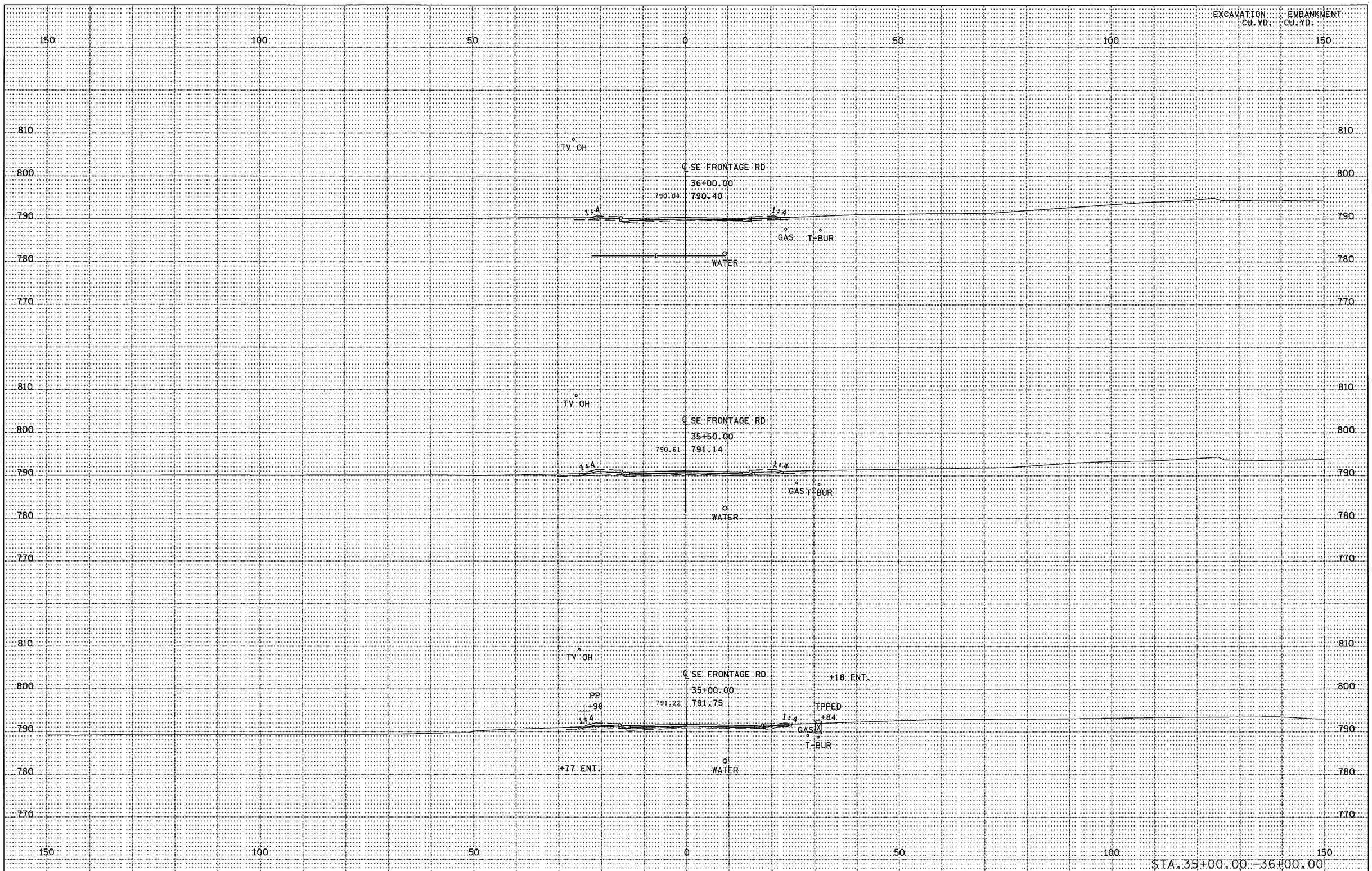

S.P. 179-020-031 S.P. 019-605-028 | STATE PROJ. NO. 1901-148 (TH 13) SHEET NO. X121 OF X137 SHEETS

DISTRICT *: METRO
IPLOT NAME: d1901148_sefront_xpl3
PATH & FILENAME: Projects/DM_ROS/013/1901/148/Design/XS/d1901148_sefront_xpl.dgn
PLOTTED/REVISED: 11-JUN-2012 07:43

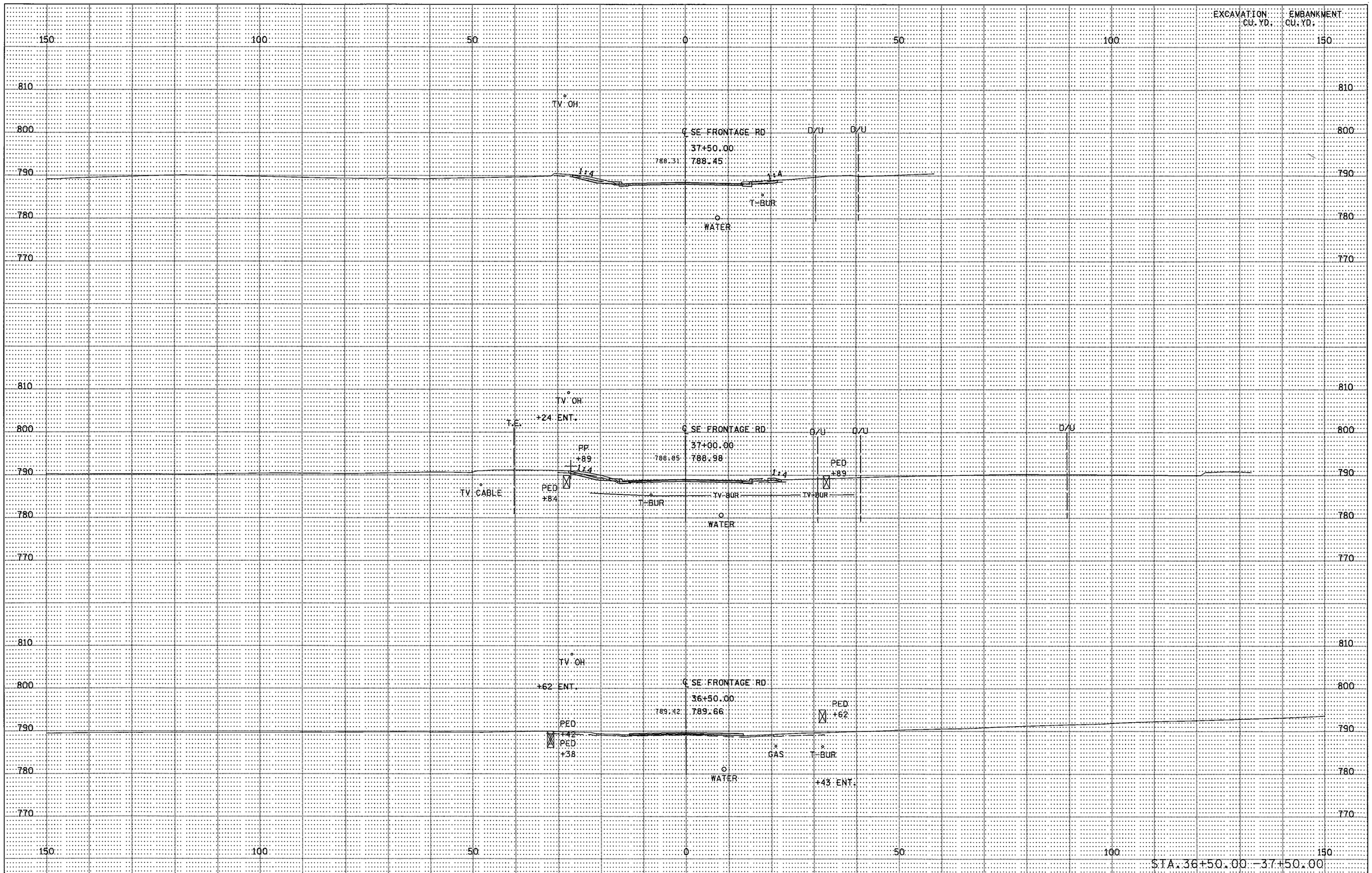

S.P. 179-020-031 S.P. 019-605-028 | STATE PROJ. NO. 1901-148 (TH 13) SHEET NO. X122 OF X137 SHEETS

PLOTTED/REVISED: 11-JUN-2012 07:43

DISTRICT *: METRO
IPLOT NAME: d190l148_sefront_xpl4
PATH & FILENAME: Projects/DM_ROS/013/190l/148/Design/XS/d190l148_sefront_xpl.dgn

DISTRICT * : METRO
IPLOT NAME: d190ll48_sefront_xpl5
PATH & FILENAME: Projects/DM_ROS/013/190l/148/Design/XS/d190ll48_sefront_xpl.dgn
PLOTTED/REVISED: 11-JUN-2012 07:44

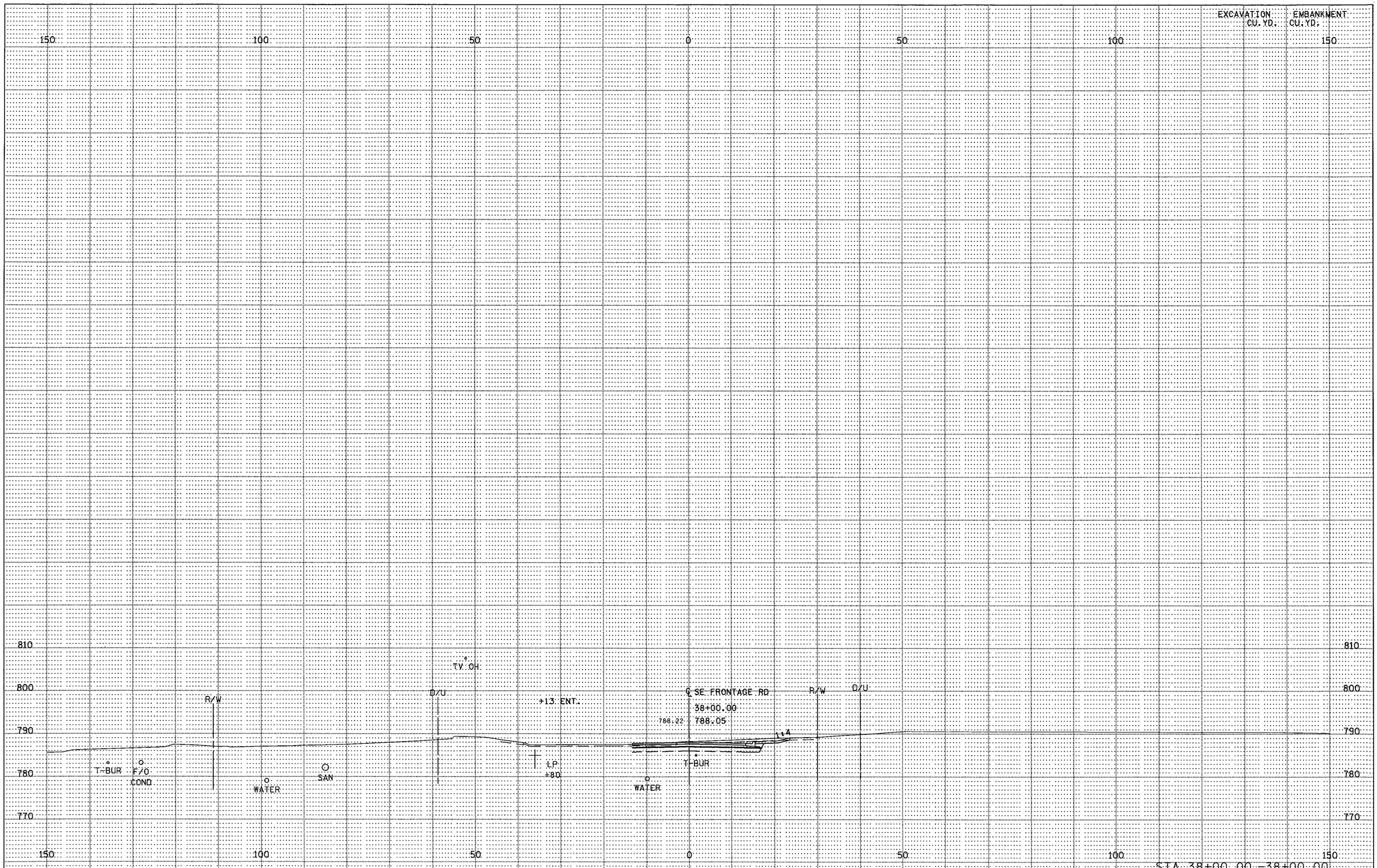

PLOTTED/REVISED: 11-JUN-2012 07:44
DISTRICT * : METRO
IPLOT NAME: d1901148_williams_xpl
PATH & FILENAME: Projects/DM_ROS/013/1901/148/Design/XS/d1901148_williams_xpl.dgn

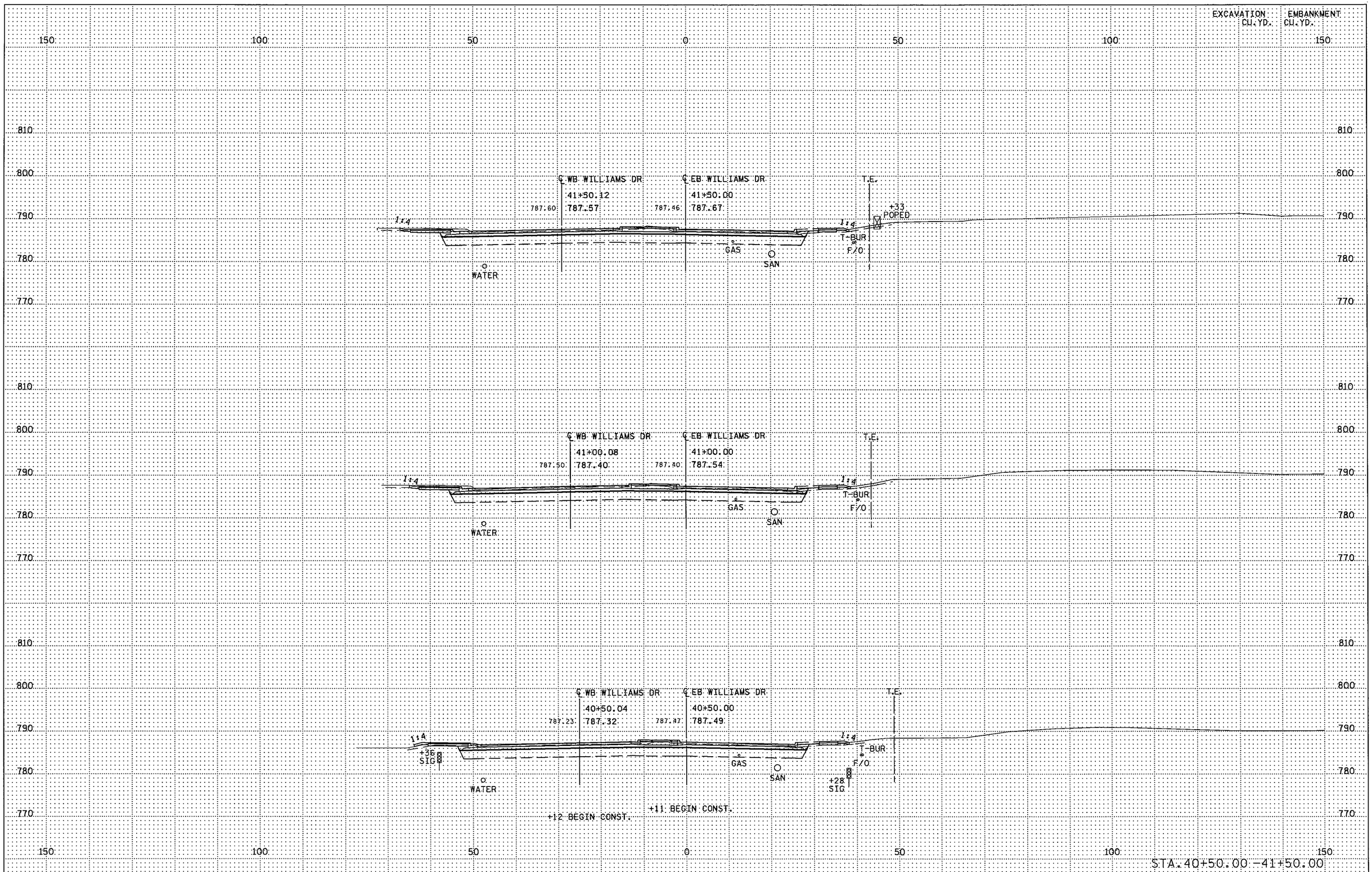

S.P. 179-020-031 S.P. 019-605-028

STATE PROJ. NO. 1901-148 (TH 13) SHEET NO. X124 OF X137 SHEETS

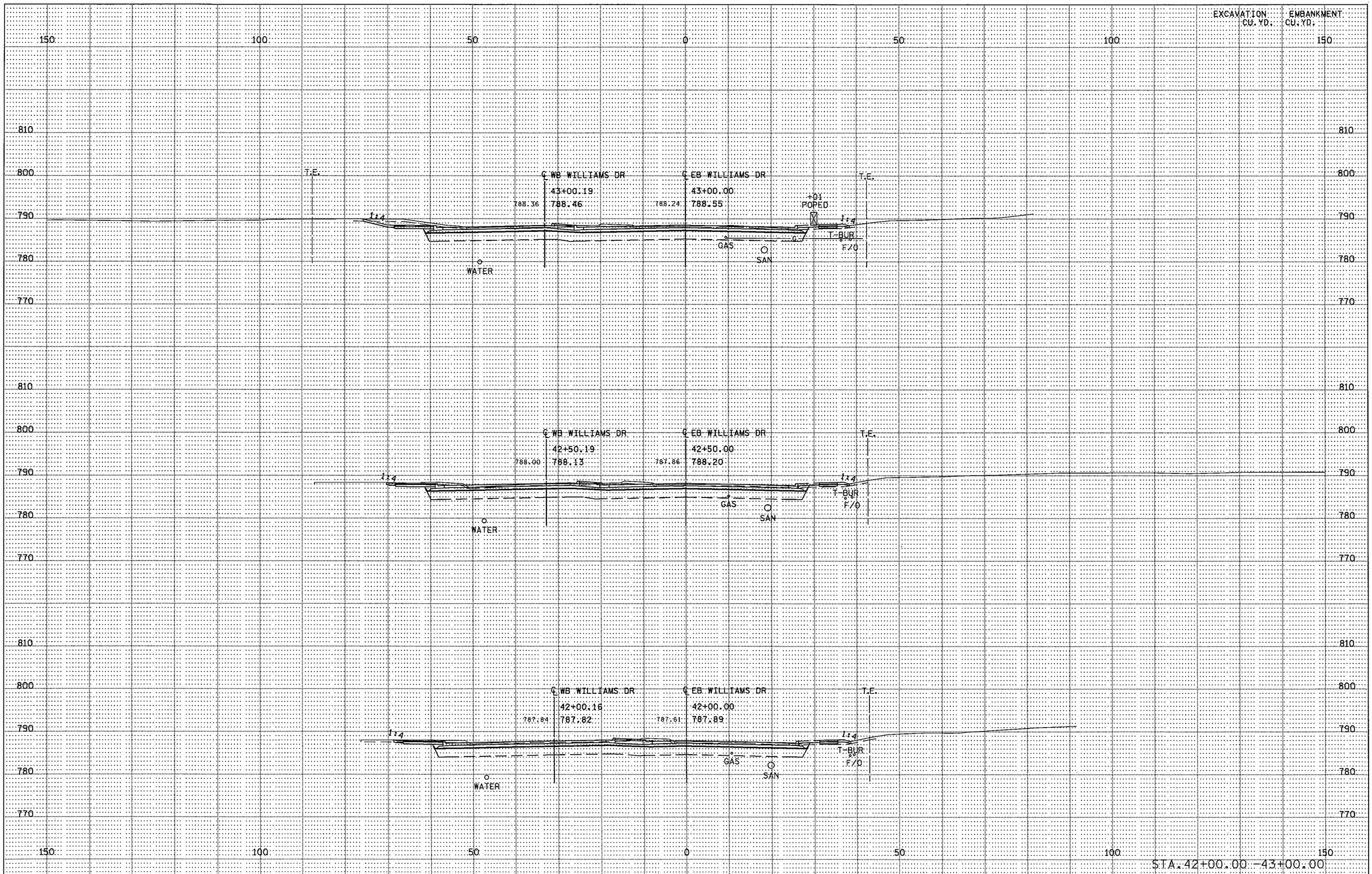

S.P. 179-020-031 S.P. 019-605-028 | STATE PROJ. NO. 1901-148 (TH 13) SHEET NO. X125 OF X137 SHEETS

DISTRICT *: METRO
IPLOT NAME: d190148_williams_xpl
PATH & FILENAME: Projects/DM_ROS/013/1901/148/Design/XS/d190148_williams_xpl.dgn
PLOTTED/REVISED: 11-JUN-2012 07:44

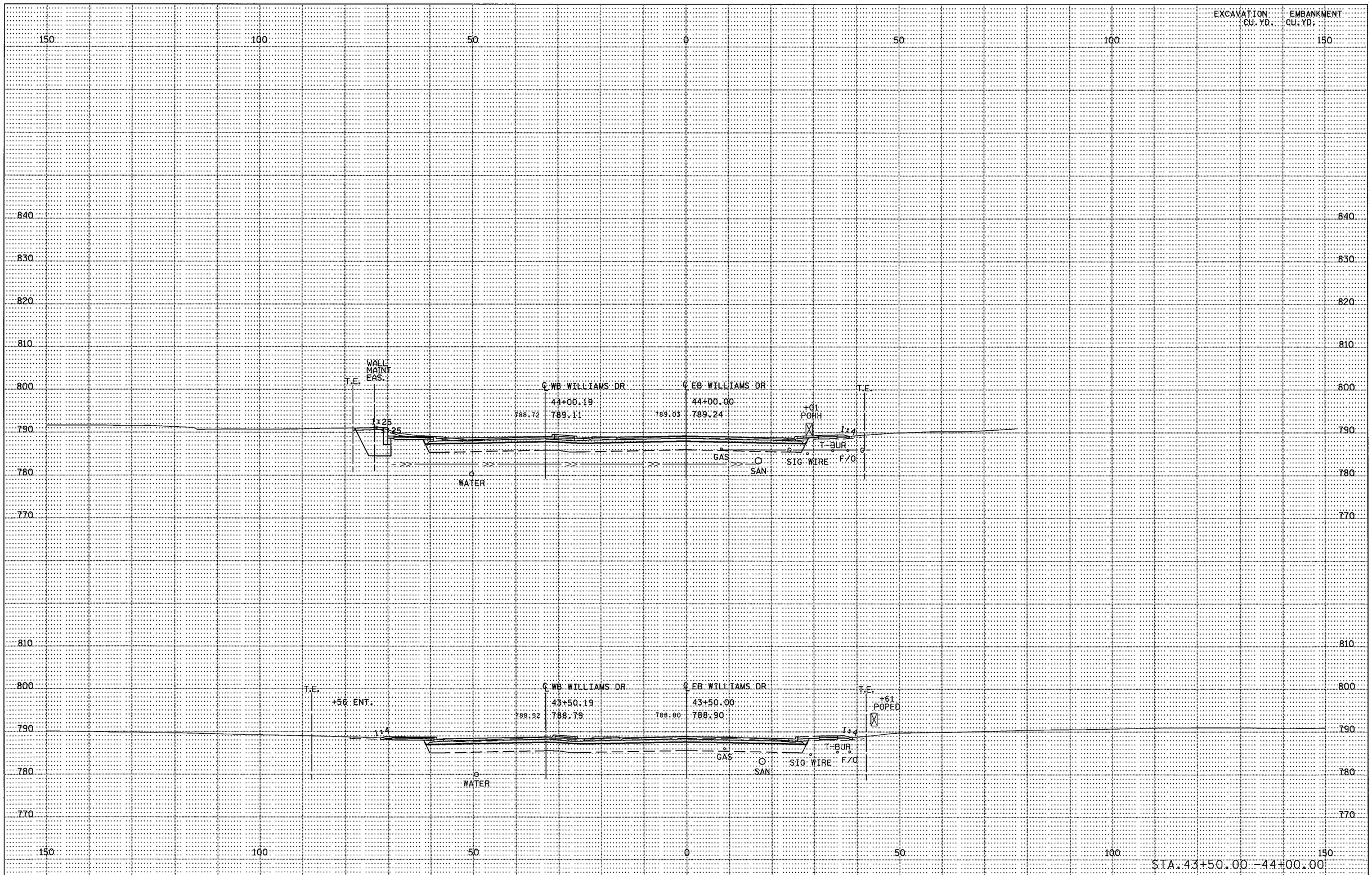

S.P. 179-020-031 S.P. 019-605-028 | STATE PROJ. NO. 1901-148 (TH 13) SHEET NO. X126 OF X137 SHEETS

DISTRICT *: METRO
IPLOT NAME: d1901148_williams_xpl2
PATH & FILENAME: Projects/DM_ROS/013/1901/148/Design/XS/d1901148_williams_xpl.dgn
PLOTTED/REVISED: 11-JUN-2012 07:45

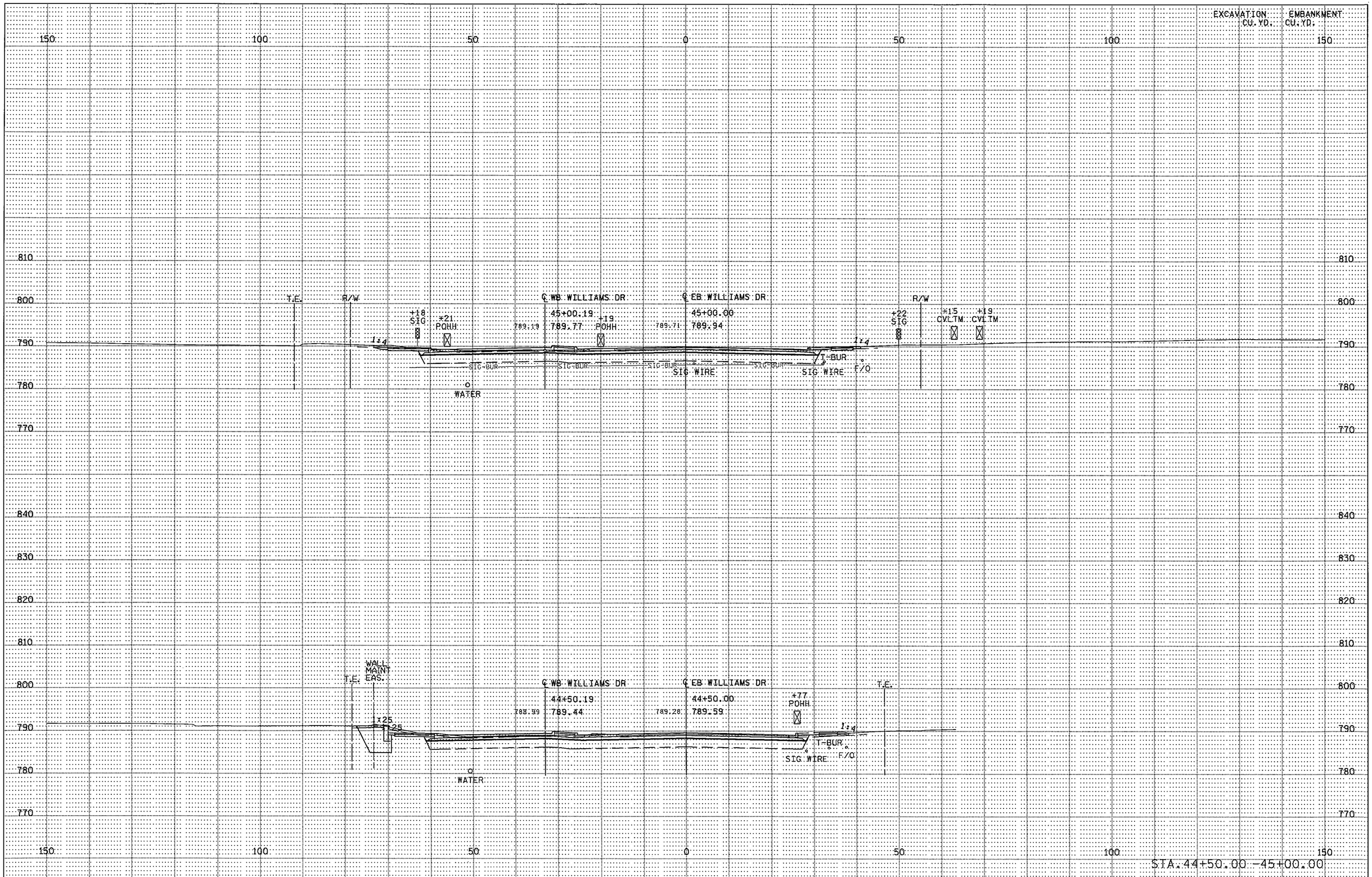

DISTRICT * : METRO
IPLOT NAME: d1901148_williams_xpl3
PATH & FILENAME: Projects/DM_ROS/013/1901/148/Design/XS/d1901148_williams_xpl.dgn
PLOTTED/REVISED: 11-JUN-2012 07:45

S.P. 179-020-031 S.P. 019-605-028

STATE PROJ. NO. 1901-148 (TH 13) SHEET NO. X127 OF X137 SHEETS

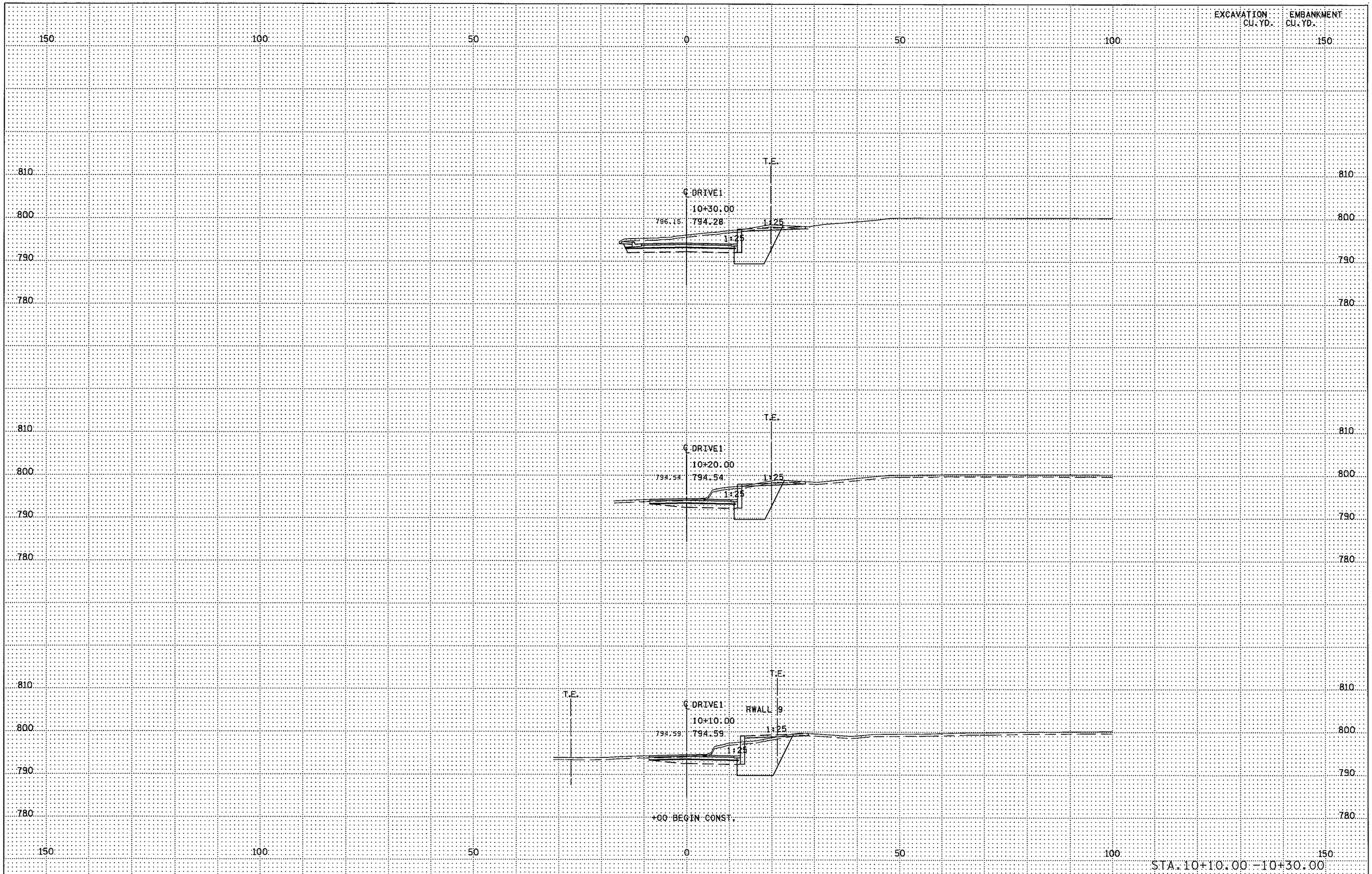

DISTRICT * : METRO
IPLOT NAME: d1901148_drivel_xpl
PATH & FILENAME: Projects/DM_ROS/013/1901/148/Design/XS/d1901148_drivel_xpl.dgn

PLOTTED/REVISED: 14-JUN-2012 08:48

S.P. 179-020-031 S.P. 019-605-028 | STATE PROJ. NO. 1901-148 (TH 13) SHEET NO. X128 OF X137 SHEETS

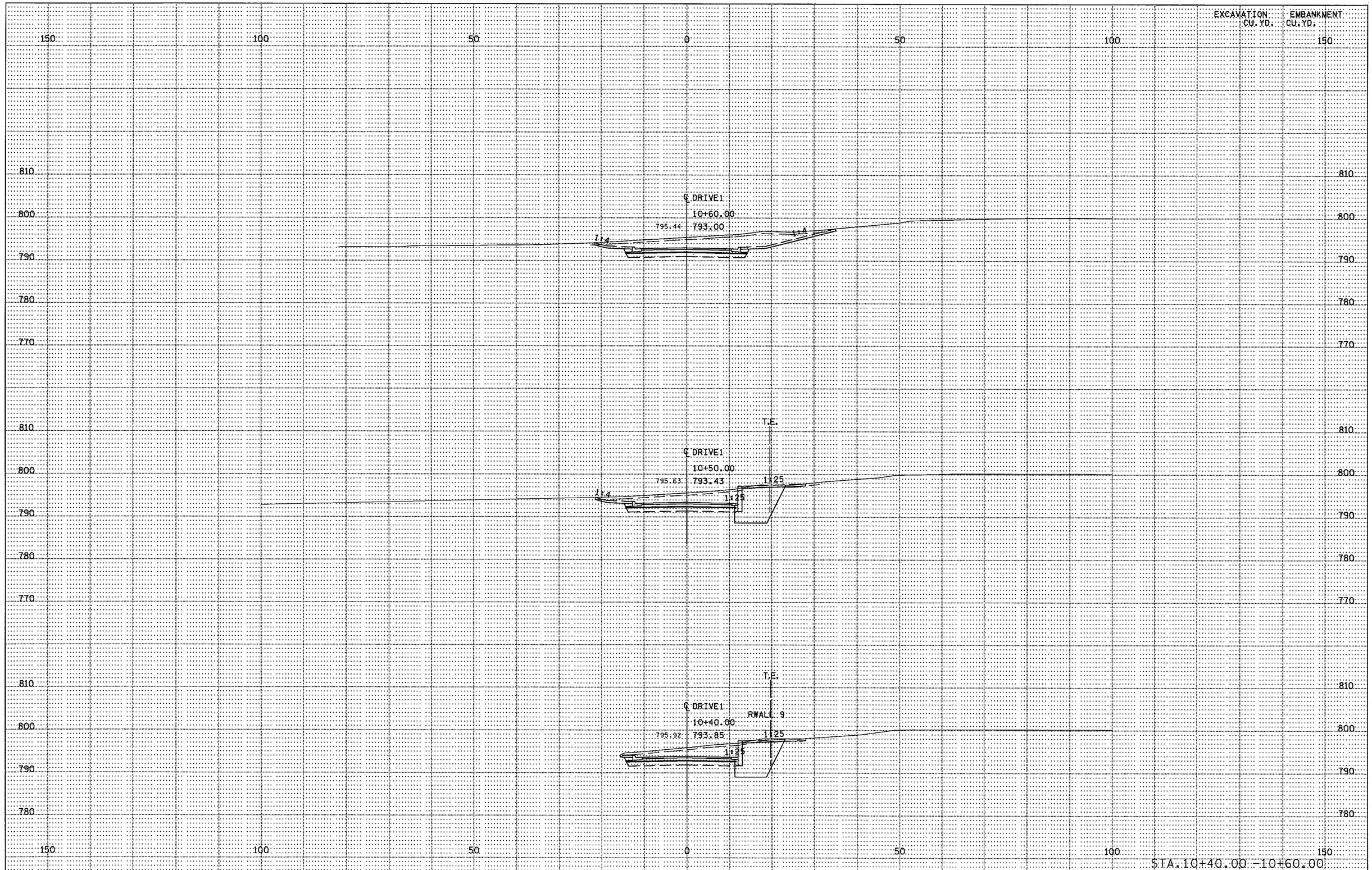

PLOTTED/REVISED: 14-JUN-2012 08:48

DISTRICT *: METRO
IPLOT NAME: dl90l148_drivel_xpl
PATH & FILENAME: Projects/DM_R05/013/190l/148/Design/XS/dl90l148_drivel_xpl.dgn

S.P. 179-020-031 S.P. 019-605-028 | STATE PROJ. NO. 1901-148 (TH 13) SHEET NO. X129 OF X137 SHEETS

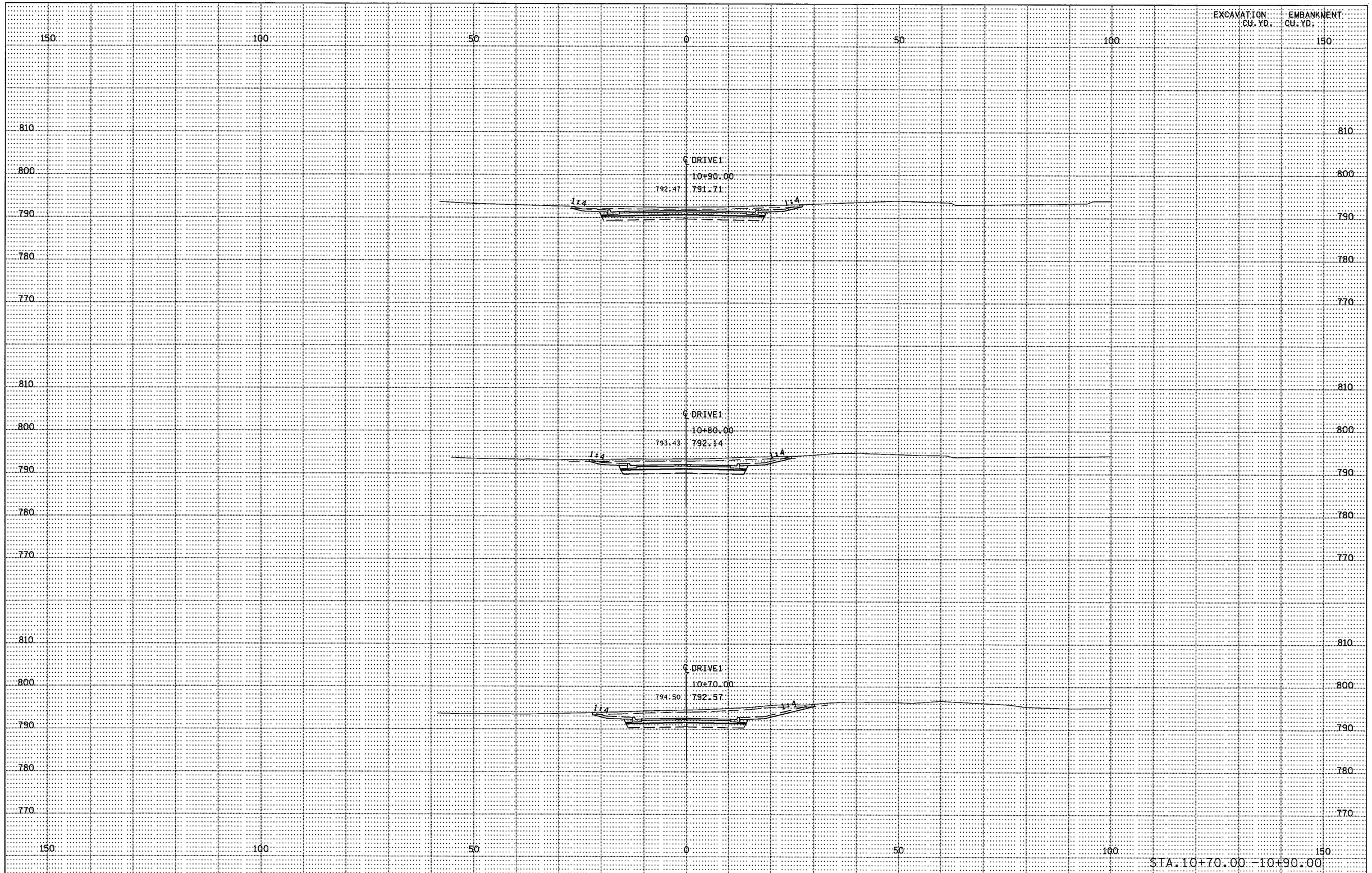

S.P. 179-020-031 S.P. 019-605-028 | STATE PROJ. NO. 1901-148 (TH 13) SHEET NO. X130 OF X137 SHEETS

DISTRICT •: METRO
IPLOT NAME: d1901148_drivel_xpl
PATH & FILENAME: Projects/DM_R05/013/1901/148/Design/XS/d1901148_drivel_xpl.dgn
PLOTTED/REVISED: 14-JUN-2012 08:48

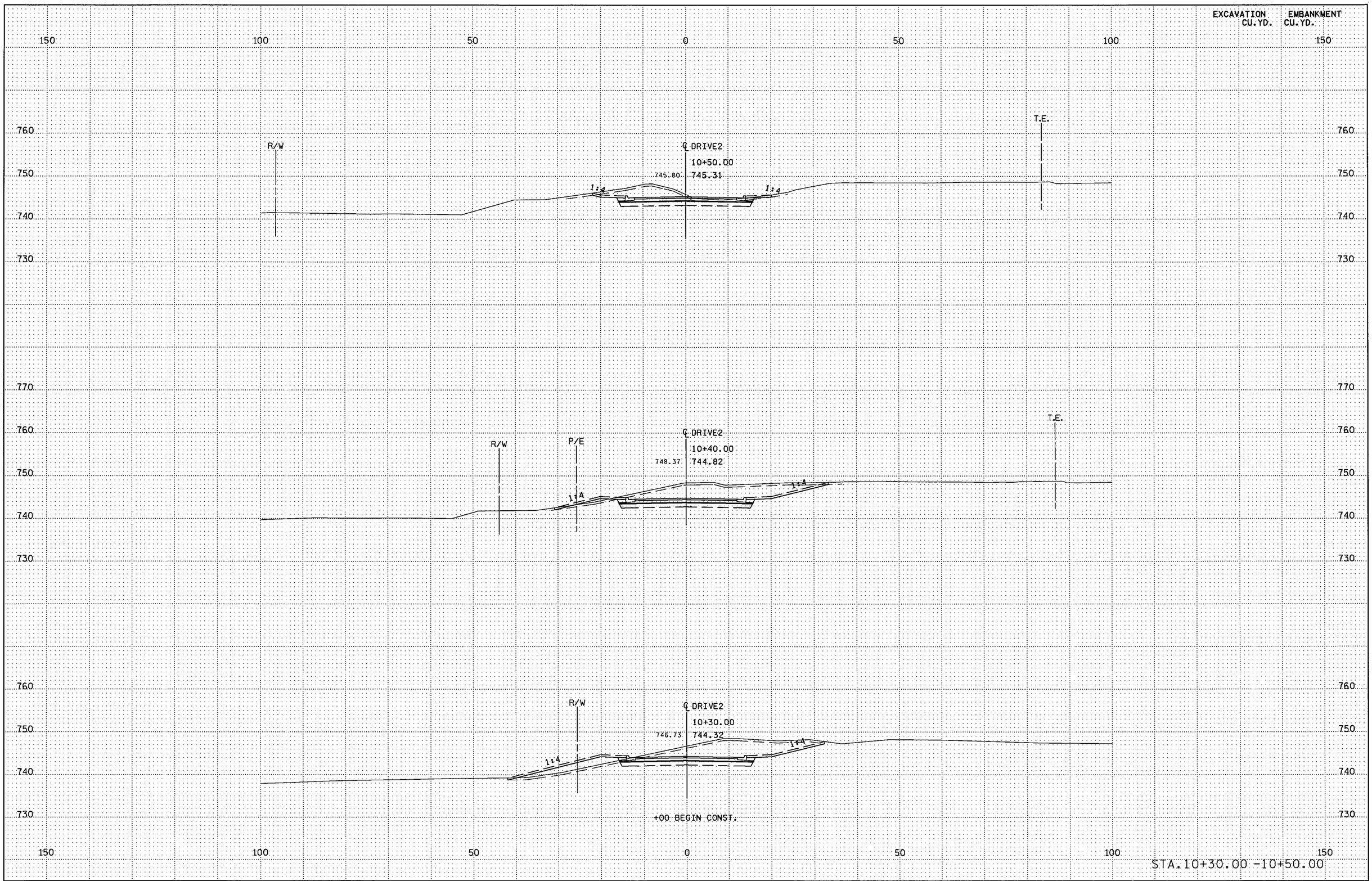

PLOTTED/REVISED: 11-JUN-2012 07:46

DISTRICT # : METRO
IPLOT NAME: d1901148_drive2_xpl
PATH & FILENAME: Projects/DM_ROS/013/1901/148/Design/XS/d1901148_drive2_xpl.dgn

S.P. 179-020-031 S.P. 019-605-028 | STATE PROJ. NO. 1901-148 (TH 1·3) SHEET NO. X1·31 OF X1·37 SHEETS

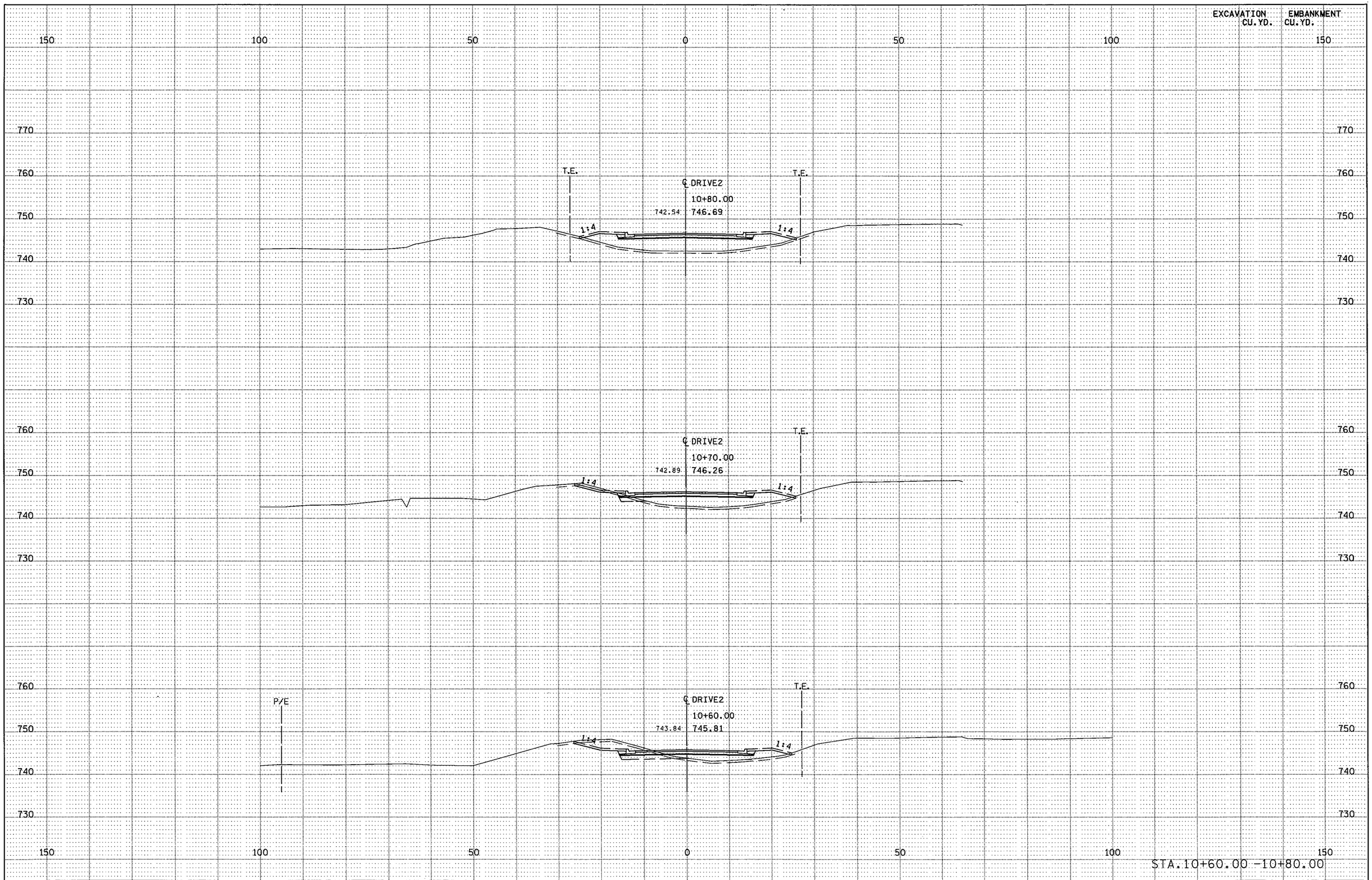

PLOTTED/REVISED: 11-JUN-2012 07:46

DISTRICT " : METRO
IPLOT NAME: d9011148_drive2_xpll
PATH & FILENAME: Projects/DM_ROS/013/1901/148/Design/XS/d9011148_drive2_xpl.dgn

S.P. 179-020-031 S.P. 019-605-028 | STATE PROJ. NO. 1901-148 (TH 13) SHEET NO. X132 OF X137 SHEETS

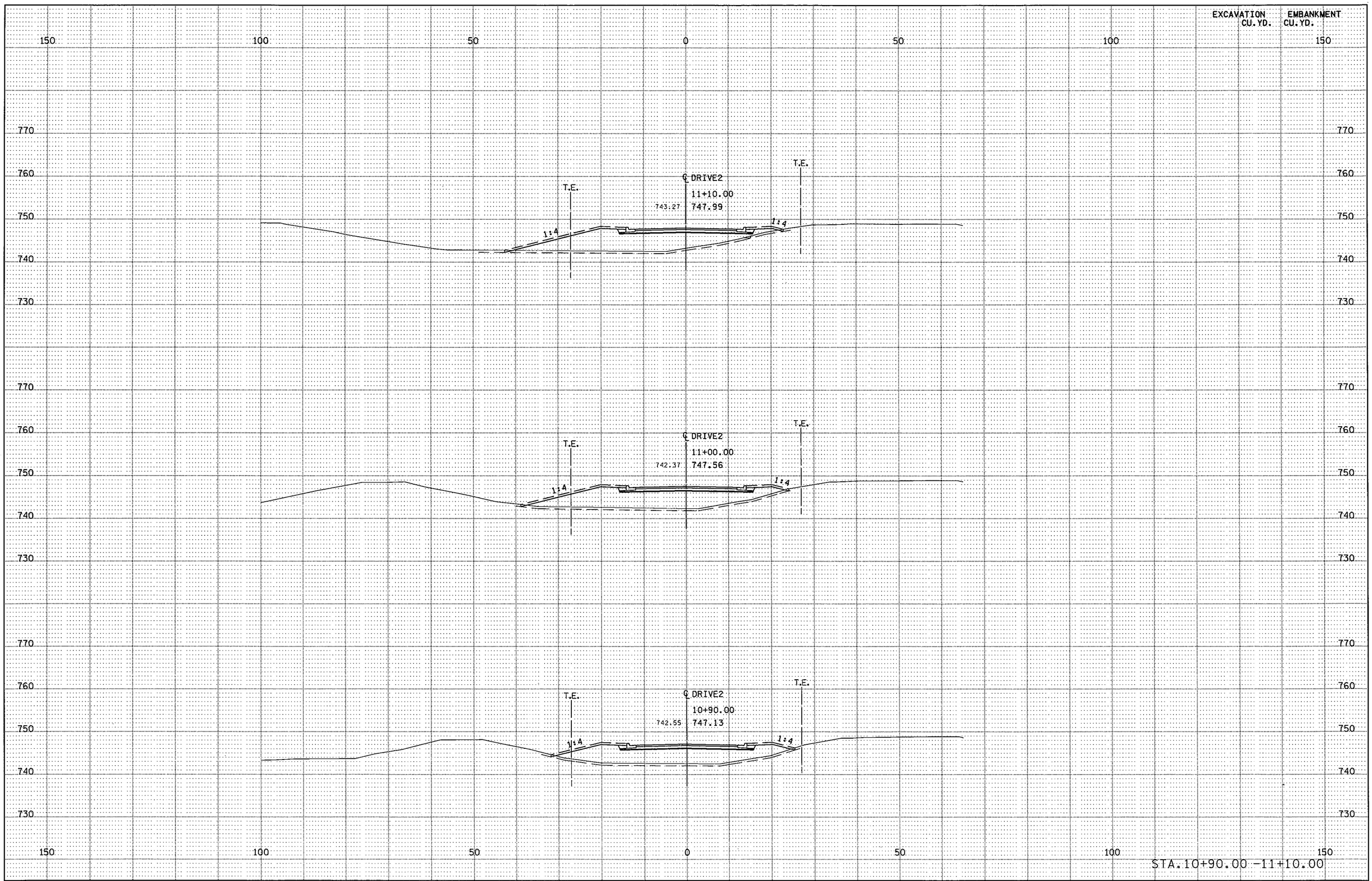

PLOTTED/REVISED: 11-JUN-2012 07:47

DISTRICT * : METRO
IPLOT NAME: d1901148_drive2_xpl2
PATH & FILENAME: Projects/DM_ROS/013/1901/148/Design/XS/d1901148_drive2_xpl.dgn

S.P. 179-020-031 S.P. 019-605-028 | STATE PROJ. NO. 1901-148 (TH 13) SHEET NO. X1.33 OF X1.37 SHEETS

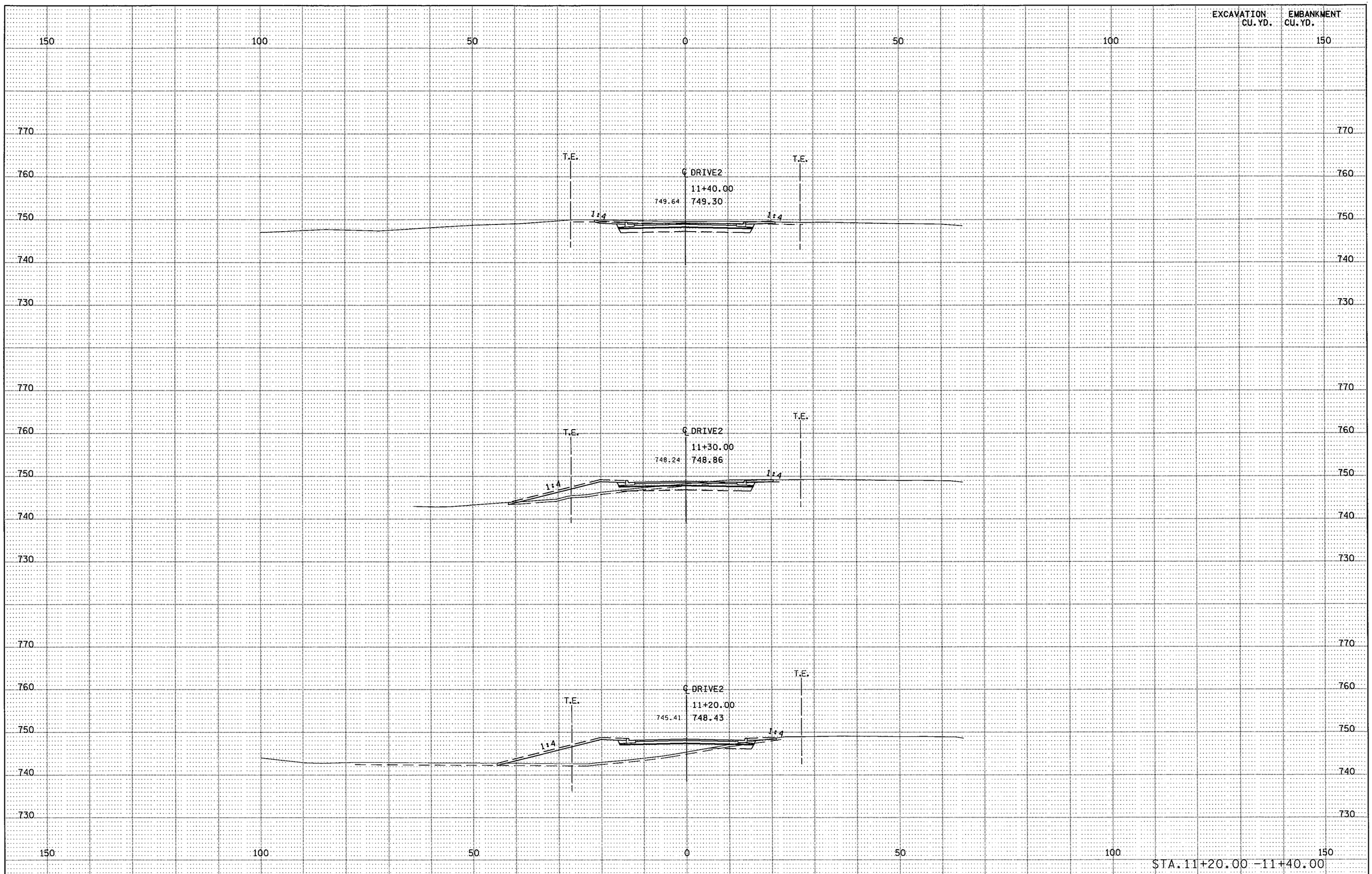

PLOTTED/REVISED: 11-JUN-2012 07:47
DISTRICT * : METRO
IPLOT NAME: d190l148_drive2_xpl3
PATH & FILENAME: Projects/DM_ROS/013/190l/148/Design/XS/d190l148_drive2_xpl.dgn

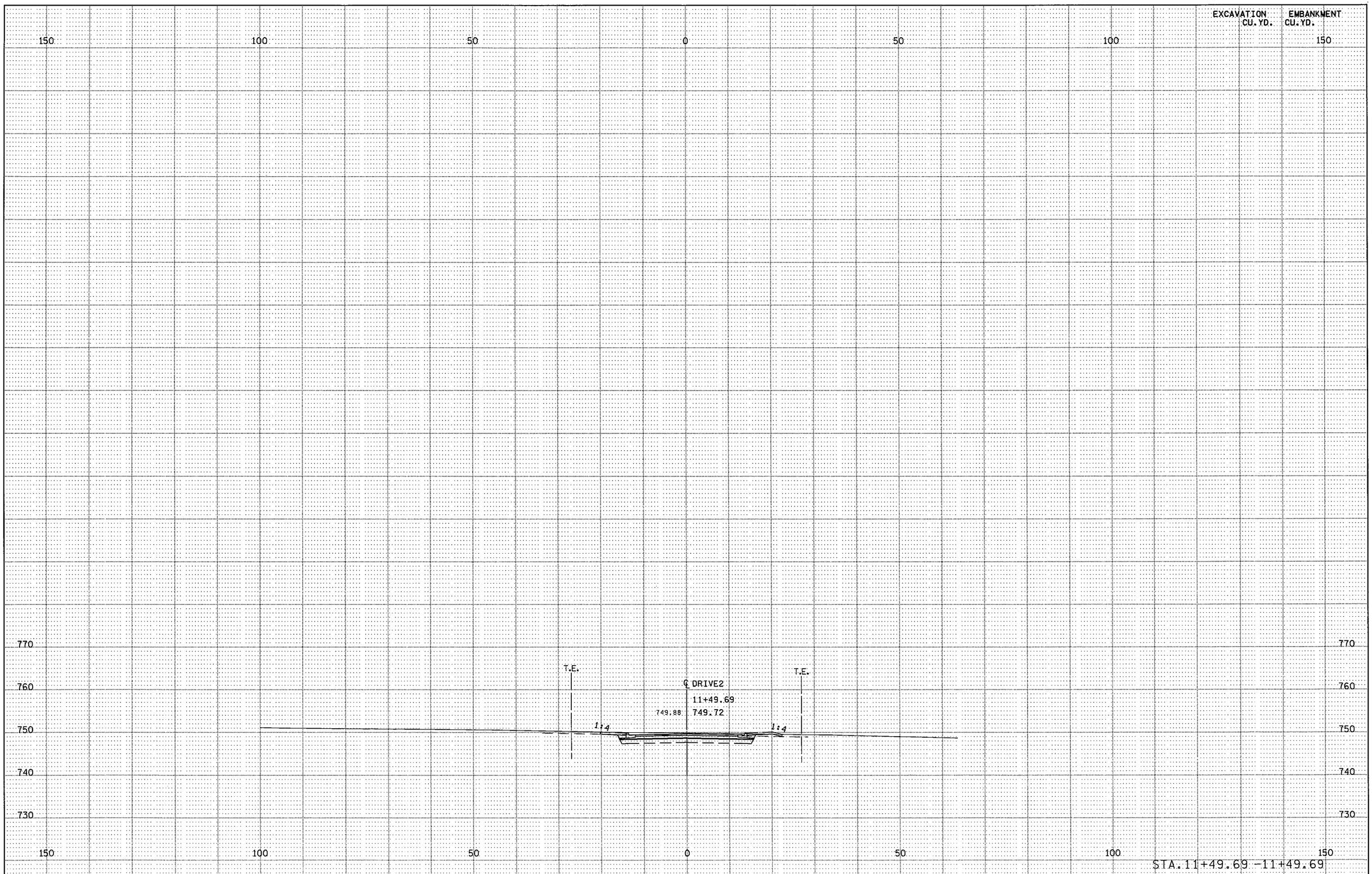

S.P. 179-020-031 S.P. 019-605-028 | STATE PROJ. NO. 1901-148 (TH 13) SHEET NO. X135 OF X137 SHEETS

PLOTTED/REVISED: 11-JUN-2012 07:47
DISTRICT *: METRO
IPLOT NAME: d1901148_drive2_xpl4
PATH & FILENAME: Projects/DM_ROS/013/1901/148/Design/XS/d1901148_drive2_xpl.dgn

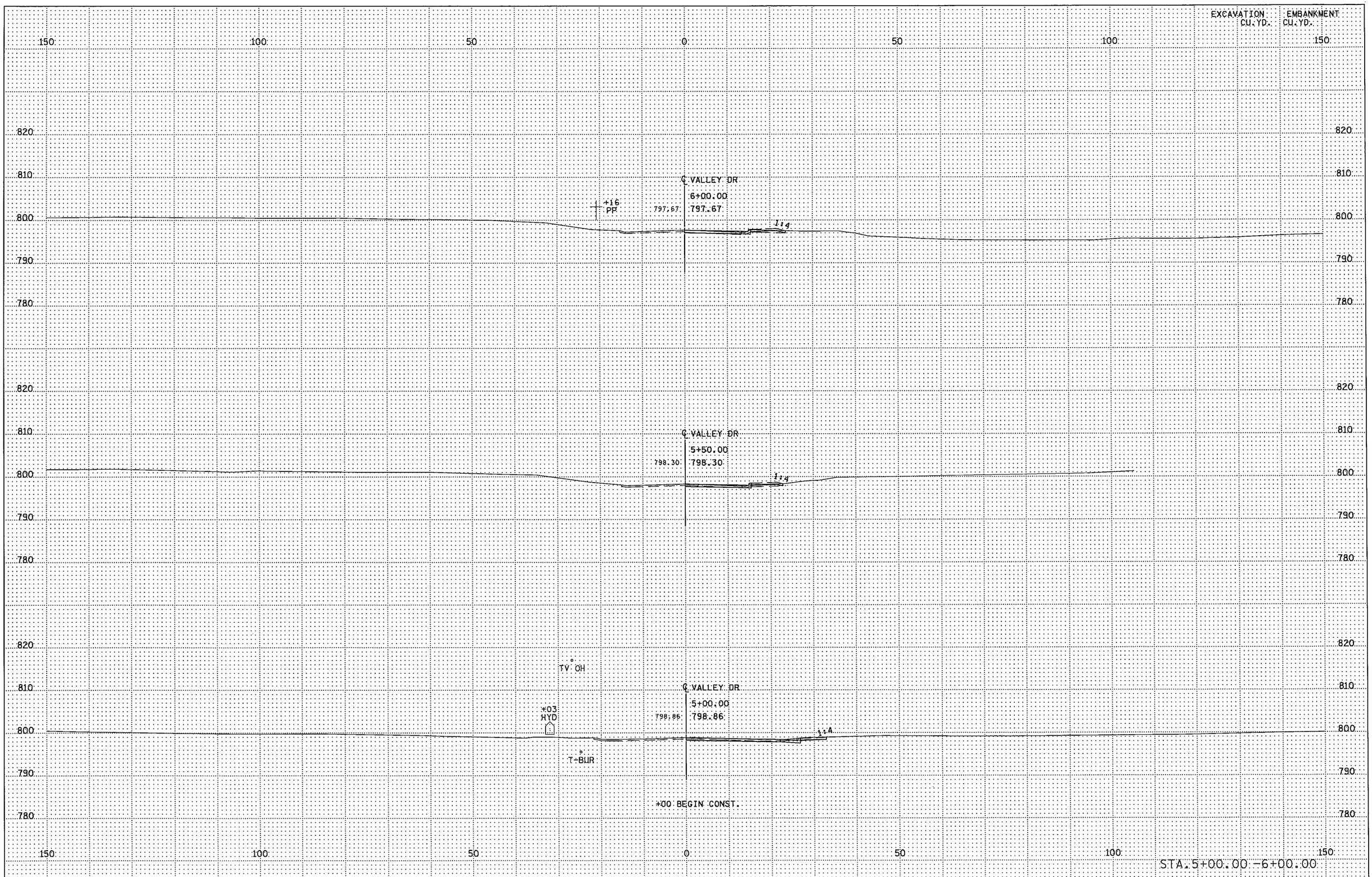

PLOTTED/REVISED: 11-JUN-2012 07:47

DISTRICT *: METRO
IPLOT NAME: d1901148_valleydr_xpl
PATH & FILENAME: Projects/DM_ROS/013/1901/148/Design/XS/d1901148_valleydr_xpl.dgn

S.P. 179-020-031 S.P. 019-605-028 | STATE PROJ. NO. 1901-148 (TH 13) SHEET NO. X136 OF X137 SHEETS

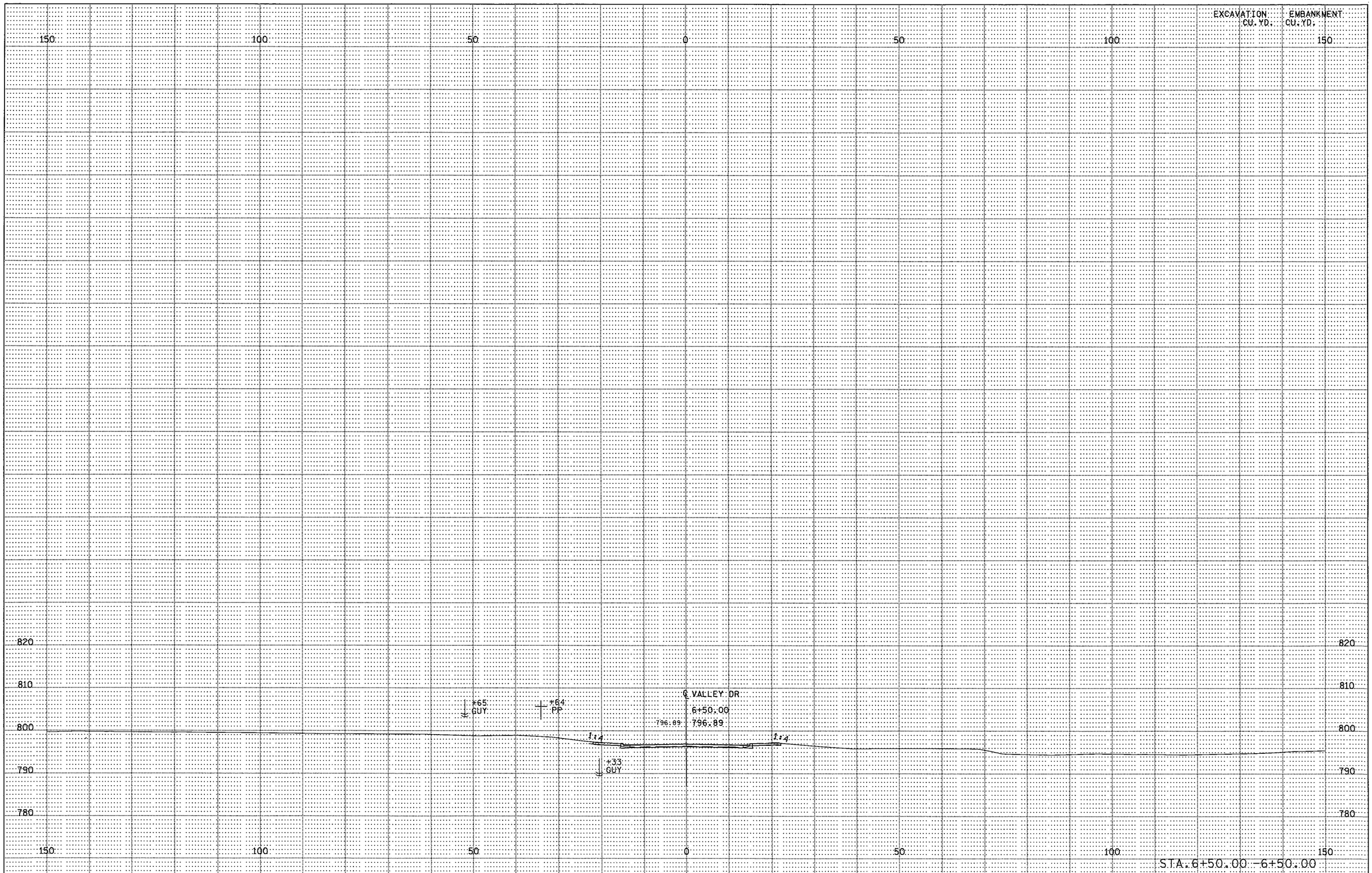

S.P. 179-020-031 S.P. 019-605-028 | STATE PROJ. NO. 1901-148 (TH 13) SHEET NO. X137 OF X137 SHEETS

PLOTTED/REVISED: 11-JUN-2012 07:48

DISTRICT *: METRO
IPLOT NAME: d1901148_valleydr_xpl
PATH & FILENAME: Projects/DM_R05/013/1901/148/Design/XS/d1901148_valleydr_xpl.dgn

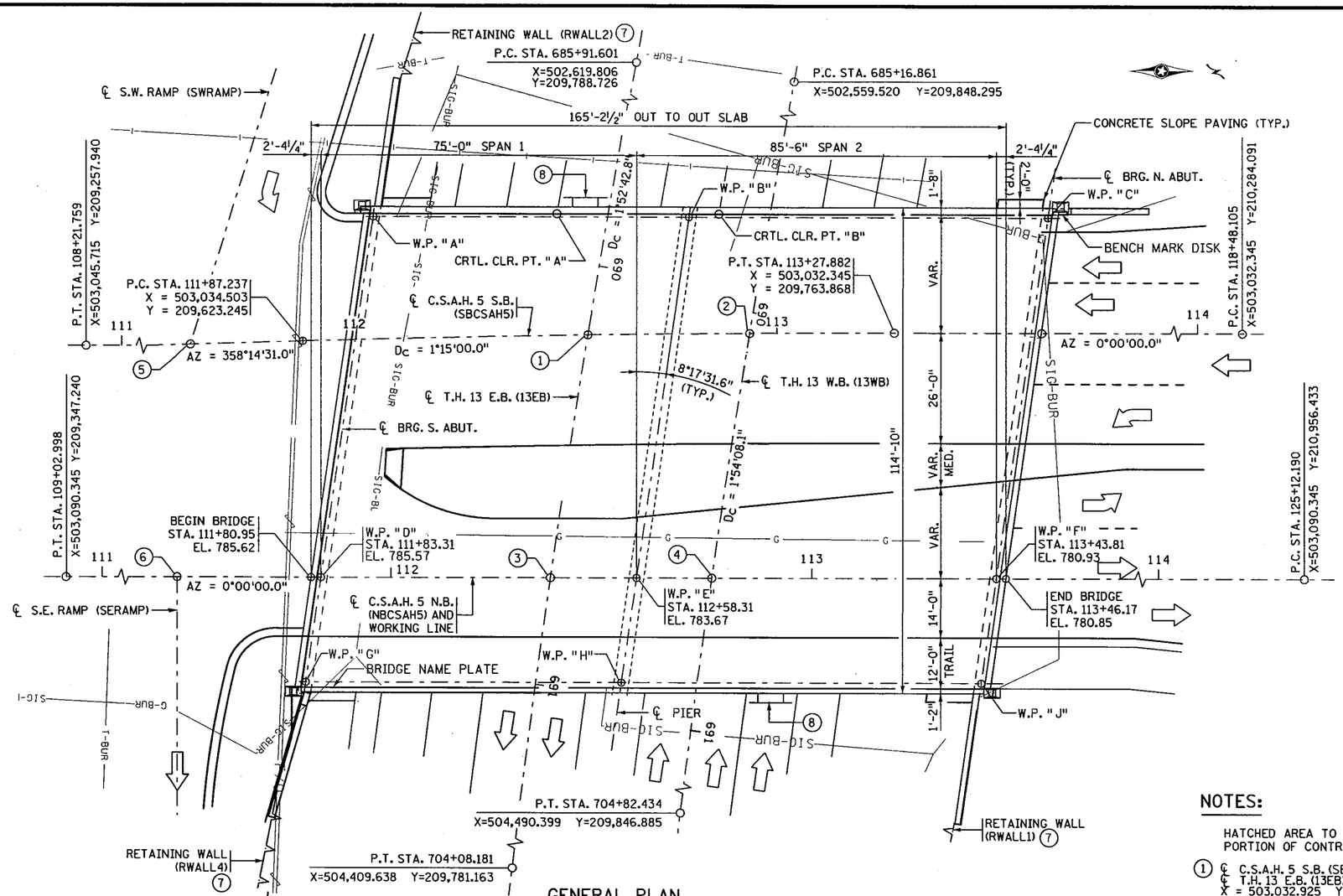

GENERAL PLAN

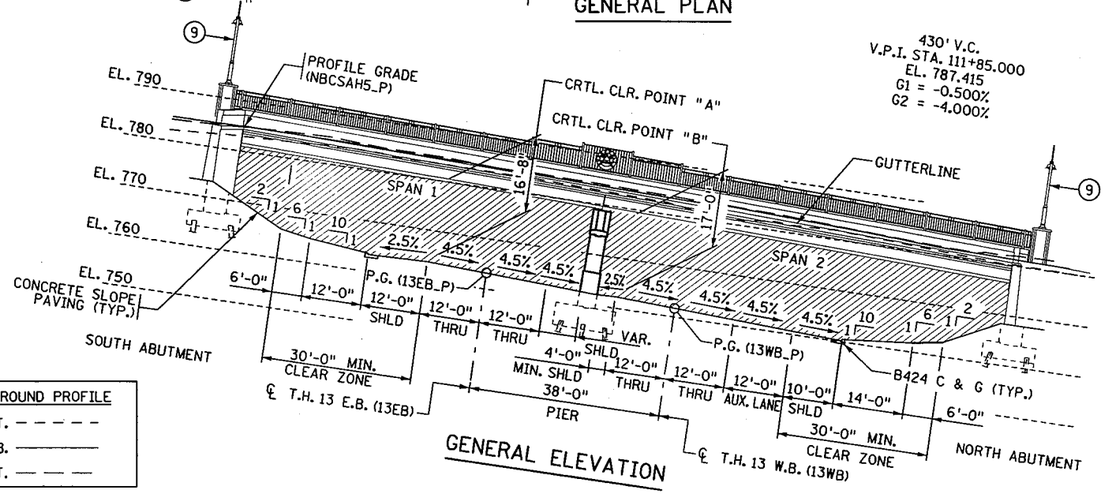

GENERAL ELEVATION

EXISTING GROUND PROFILE
88' LT. - - - - -
℄ C.S.A.H. 5 N.B. ————
28' RT. — — —

MINN. PROJ. NO. HPPH-STP09-STP 1912 (258)

DESIGN DATA

2010 AND CURRENT INTERIM AASHTO LRFD BRIDGE DESIGN SPECIFICATIONS

LOAD AND RESISTANCE FACTOR DESIGN METHOD

HL 93 LIVE LOAD

DEAD LOAD INCLUDES 20 p.s.f. ALLOWANCE FOR FUTURE WEARING COURSE MODIFICATIONS

MATERIAL DESIGN PROPERTIES:
REINFORCED CONCRETE:
f'c = 4 ksi n = 8
Fy = 60 ksi FOR REINFORCEMENT
PRESTRESSED CONCRETE:
f'c = 9.0 ksi n=1
fpu = 270 ksi 0.6" DIAMETER LOW RELAXATION STRANDS
DECK AREA = 18972 SQ. FT.
2032 PROJECTED TRAFFIC VOLUMES:
ROADWAY OVER ADT = 29,000
ROADWAY UNDER ADT = 63,000
DESIGN SPEED: OVER = 40 MPH UNDER = 60 MPH
HL 93 LRFR OPERATING RATING RF = 1.987

LIST OF SHEETS

NO.	DESCRIPTION
1	GENERAL PLAN AND ELEVATION
2	TRANSVERSE SECTION & SCHED. OF QUANTITIES
3	BRIDGE LAYOUT
4-5	AESTHETIC DETAILS
6	STAGING DETAILS
7-27	SOUTH ABUTMENT DETAILS & REINFORCEMENT
28-49	NORTH ABUTMENT DETAILS & REINFORCEMENT
50-57	PIER DETAILS & REINFORCEMENT
58	FRAMING PLAN
59-60	36" PRESTRESSED CONCRETE BEAM
61-63	SUPERSTRUCTURE DETAILS
64	CONCRETE BARRIER TYPE P-4 MOD.
65-66	CONCRETE BARRIER TYPE P-1 MOD.
67-71	ORNAMENTAL METAL RAILING DETAILS
72-73	WATERPROOF EXPANSION DEVICE
74-78	CONDUIT SYSTEM
79	CONCRETE SLOPE PAVING
80-85	DETAILS
86	AS-BUILT BRIDGE DATA
87	BRIDGE SURVEY
88	BRIDGE SURVEY PLAN AND PROFILE
89	BORINGS
90	CONSTRUCTION PLAN AND INPLACE UTILITIES
91	ALIGNMENT TABULATION

NOTES:

HATCHED AREA TO BE REMOVED UNDER GRADING PORTION OF CONTRACT.

1. ℄ C.S.A.H. 5 S.B. (SBCSAH5) P.O.C. STA. 112+54.972 = ℄ T.H. 13 E.B. (13EB) P.O.C. STA. 690+16.474 X = 503,032.925 Y = 209,690.961
2. ℄ C.S.A.H. 5 S.B. (SBCSAH5) P.O.C. STA. 112+93.565 = ℄ T.H. 13 W.B. (13WB) P.O.C. STA. 690+05.028 X = 503,032.474 Y = 209,729.552
3. ℄ C.S.A.H. 5 N.B. (NBCSAH5) P.O.T. STA. 112+37.853 = ℄ T.H. 13 E.B. (13EB) P.O.C. STA. 690+74.575 X = 503,090.345 Y = 209,682.095
4. ℄ C.S.A.H. 5 N.B. (NBCSAH5) P.O.T. STA. 112+76.253 = ℄ T.H. 13 W.B. (13WB) P.O.C. STA. 690+63.605 X = 503,090.345 Y = 209,720.496
5. ℄ C.S.A.H. 5 S.B. (SBCSAH5) P.O.T. STA. 111+60.600 = ℄ S.W. RAMP (SWRAMP) P.O.T. STA. 58+96.005 X = 503,035.320 Y = 209,596.621
6. ℄ C.S.A.H. 5 N.B. (NBCSAH5) P.O.T. STA. 111+49.201 = ℄ S.E. RAMP (SERAMP) P.O.T. STA. 60+00.000 X = 503,090.345 Y = 209,593.443
7. SEE GRADING PLAN.
8. BRIDGE-MOUNTED SIGN. SEE SIGNING PLAN.
9. LIGHT FIXTURES TO BE FURNISHED AND INSTALLED BY OTHERS.

APPROVED: Mark Fuchs DAKOTA COUNTY ENGINEER
DATE: 7/10/12

I HEREBY CERTIFY THAT THIS PLAN WAS PREPARED BY ME OR UNDER MY DIRECT SUPERVISION AND THAT I AM A DULY LICENSED PROFESSIONAL ENGINEER UNDER THE LAWS OF THE STATE OF MINNESOTA.

SIGNED Todd R. Stevens DATE 7/9/12
LICENSED PROFESSIONAL ENGINEER
NAME: TODD R. STEVENS LIC NO. 21312

BENCH MARK: SEE BRIDGE SURVEY SHEET

TRUNK HIGHWAY NO. 13
MINNESOTA
DEPARTMENT OF TRANSPORTATION

BRIDGE NO. 19036

T.H. 13 AT THE INTERSECTION OF C.S.A.H. 5

75'-0" & 85'-6" PRESTRESSED CONC. BEAM SPANS, 100'-0" ROADWAY, 12'-0" TRAIL

IDENTIFICATION NO. 501

GENERAL PLAN AND ELEVATION

SEC. 14 TWP. 115 N. R. 21 W.
CITY OF BURNSVILLE DAKOTA CO.

APPROVED Nancy Daubenberger STATE BRIDGE ENGINEER
DATE 7/9/12

DES.	G.B.B.	DR.	N.A.	19036
CHK.	P.D.G.	CHK.	T.R.S	

FILENAME: IP_PWP.dl453300\9036.dgn
TIME : 10:43:17 AM
PLOTTED : 03-JUL-2012
PATH & FILENAME: Bridge/Final_Design/1/19036/Cadd-Plan/19036.dgn

JOB NO. T9F100 UNIT: TODD STEVENS S.P. NO. 1901-148 (T.H. 13=117), S.P. NO. 019-605-028, S.P. NO. 179-020-031 SHEET NO. 1 OF 91 SHEETS

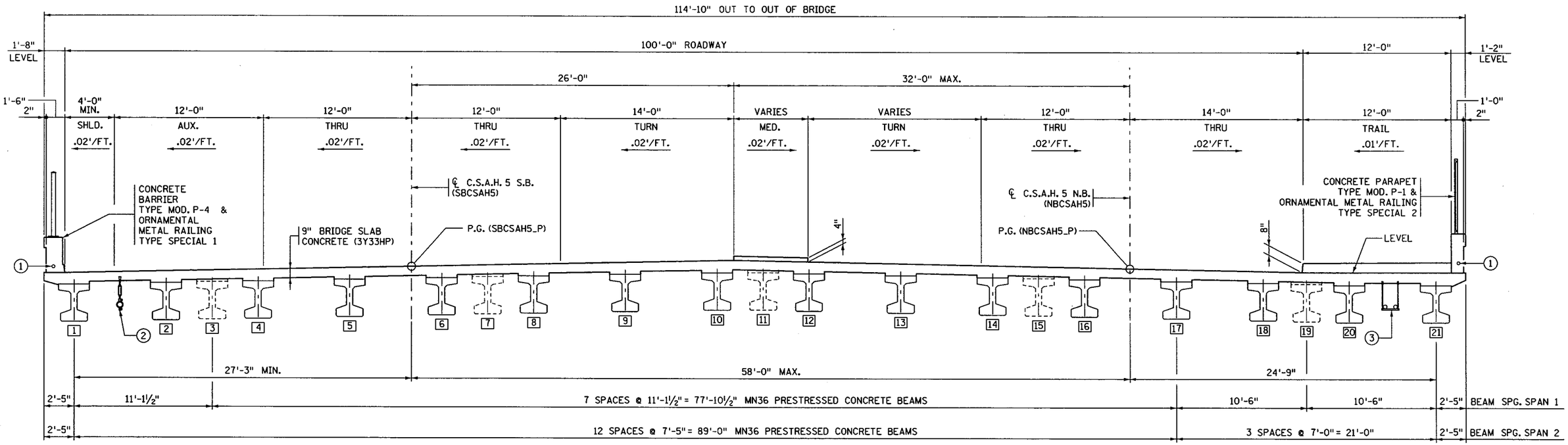

TRANSVERSE SECTION

☐ DESIGNATES BEAM NUMBERS

(1) 1½" DIA. R.S.C. (LIGHTING)

(2) 2" DIA. R.S.C. (SIGNALS)

(3) 3" DIA. R.S.C. (FUTURE USE)

SCHEDULE OF QUANTITIES FOR ENTIRE BRIDGE

ITEM NO.	ITEM	UNIT	QUANTITY	ITEM NO.	ITEM	UNIT	QUANTITY
2401.501	STRUCTURAL CONCRETE (1A43)	CU. YD.	550 (P)	2405.502	PRESTRESSED CONCRETE BEAMS 36M	LIN. FT.	2208 (P)
2401.501	STRUCTURAL CONCRETE (3Y43)	CU. YD.	894 (P)	2405.511	DIAPHRAGMS FOR TYPE 36M PRESTRESSED BEAMS	LIN. FT.	463 (P)
2401.512	BRIDGE SLAB CONCRETE (3Y33HP)	SQ. FT.	18972 (P)	2411.602	PRECAST CONCRETE CAP	EACH	4 (P)
2401.513	TYPE MOD P-1 (TL-2) RAILING CONCRETE (3Y46)	LIN. FT.	255 (P)	2411.618	ARCHITECTURAL SURFACE FINISH (SINGLE COLOR)	SQ. FT.	3760 (P)
2401.513	TYPE MOD P-4 (TL-4) RAILING CONCRETE (3Y46)	LIN. FT.	182 (P)	2411.618	ARCHITECTURAL CONCRETE TEXTURE (RANDOM BATTEN)	SQ. FT.	3760 (P)
2401.515	SIDEWALK CONCRETE (3Y46)	SQ. FT.	1983 (P)	2452.510	STEEL H-PILING DRIVEN 12"	LIN. FT.	4055
2401.516	RAISED MEDIAN CONCRETE (3Y46)	SQ. FT.	2114 (P)	2452.511	STEEL H-PILING DELIVERED 12"	LIN. FT.	4055
2401.541	REINFORCEMENT BARS	POUND	46970 (P)	2452.520	STEEL H-TEST PILE 45 FT LONG 12"	EACH	3
2401.541	REINFORCEMENT BARS (EPOXY COATED)	POUND	228600 (P)	2452.520	STEEL H-TEST PILE 55 FT LONG 12"	EACH	6
2401.601	STRUCTURE EXCAVATION	LUMP SUM	1	2502.502	DRAINAGE SYSTEM TYPE (B910)	LUMP SUM	1
2401.618	BRIDGE DECK PLANING	SQ. FT.	13058 (P)	2514.501	CONCRETE SLOPE PAVING	SQ. YD.	314 (P)
2402.583	ORNAMENTAL METAL RAILING TYPE SPECIAL 1	LIN. FT.	181 (P)	2545.509	CONDUIT SYSTEM (LIGHTING)	LUMP SUM	1
2402.583	ORNAMENTAL METAL RAILING TYPE SPECIAL 2	LIN. FT.	164 (P)	2545.509	CONDUIT SYSTEM (SIGNALS)	LUMP SUM	1
2402.583	ORNAMENTAL METAL RAILING TYPE SPECIAL 3	LIN. FT.	60 (P)	2545.509	CONDUIT SYSTEM (FUTURE)	LUMP SUM	1
2402.591	EXPANSION JOINT DEVICES TYPE 4	LIN. FT.	230 (P)	2565.602	NMC LOOP DETECTOR 6'X6'	EACH	4
2402.595	BEARING ASSEMBLY	EACH	54 (P)				

CONSTRUCTION NOTES

THE 2005 EDITION OF THE MINNESOTA DEPARTMENT OF TRANSPORTATION "STANDARD SPECIFICATIONS FOR CONSTRUCTION" SHALL GOVERN.

BRIDGE SEAT REINFORCEMENT SHALL BE CAREFULLY PLACED TO AVOID INTERFERENCE WITH DRILLING HOLES FOR ANCHOR RODS. THE BEAMS SHALL BE ERECTED IN FINAL POSITION PRIOR TO DRILLING HOLES FOR AND PLACING ANCHOR RODS.

THE FIRST TWO DIGITS OF EACH BAR MARK INDICATE THE BAR NUMBER WHICH APPROXIMATES THE NOMINAL DIAMETER OF THE BAR IN MILLIMETERS (mm).

BARS MARKED WITH THE SUFFIX "E" SHALL BE EPOXY COATED IN ACCORDANCE WITH SPEC. 3301.

THE SUBSURFACE UTILITY INFORMATION IN THIS PLAN IS UTILITY QUALITY LEVEL D. THIS UTILITY QUALITY LEVEL WAS DETERMINED ACCORDING TO THE GUIDELINES OF CI/ASCE 38-02, ENTITLED "STANDARD GUIDELINES FOR THE COLLECTION AND DEPICTION OF EXISTING SUBSURFACE UTILITY DATA".

THE PILE LOADS SHOWN IN THE PLANS AND THE CORRESPONDING NOMINAL PILE BEARING RESISTANCE WERE COMPUTED USING LRFD METHODOLOGY. PILE BEARING RESISTANCE DETERMINED IN THE FIELD SHALL INCORPORATE THE METHODS AND/OR FORMULAS DESCRIBED IN THE SPECIAL PROVISIONS.

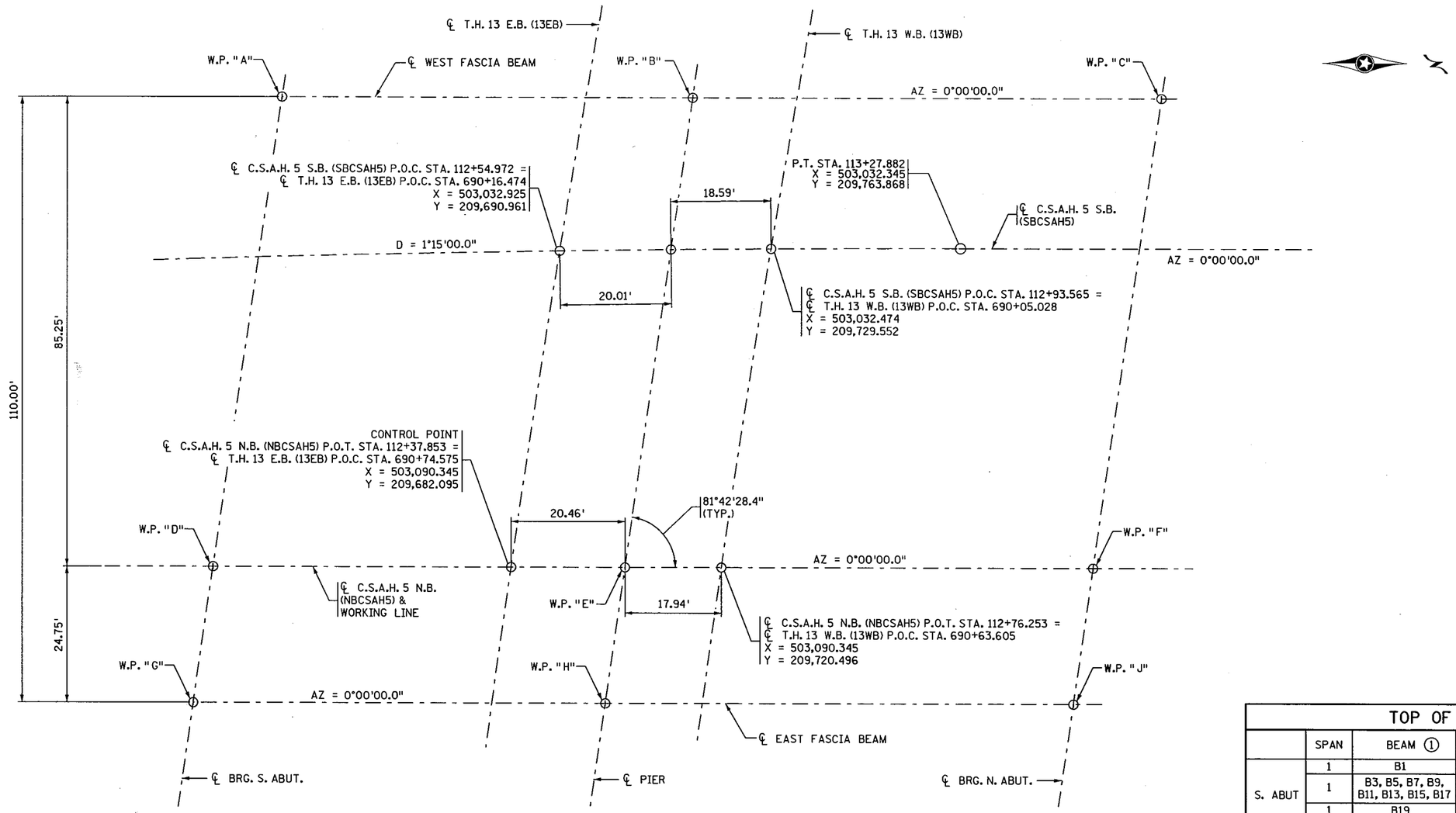

WORKING POINT LAYOUT

TOP OF ROADWAY TO BRIDGE SEAT								
	SPAN	BEAM ①	DECK THICKNESS	STOOL HEIGHT	BEAM HEIGHT	BEARING HEIGHT	TOTAL INCHES	TOTAL FEET
S. ABUT	1	B1	9"	3 5/8"	36"	5 1/4"	53 7/8"	4.49'
	1	B3, B5, B7, B9, B11, B13, B15, B17	9"	3"	36"	5 1/4"	53 1/4"	4.44'
	1	B19	9"	2 5/8"	36"	5 1/4"	52 7/8"	4.41'
	1	B21	9"	3 3/8"	36"	5 1/4"	53 5/8"	4.47'
PIER	1	B1	9"	3 5/8"	36"	3 1/4"	51 7/8"	4.32'
	1	B3, B5, B7, B9, B11, B13, B15, B17	9"	3"	36"	3 1/4"	51 1/4"	4.27'
	1	B19	9"	2 3/4"	36"	3 1/4"	51"	4.25'
	1	B21	9"	3 3/8"	36"	3 1/4"	51 5/8"	4.30'
	2	B1	9"	3 1/2"	36"	3 1/4"	51 3/4"	4.31'
	2	B2, B4-B6, B8-B10, B12-B14, B16-B18	9"	3 1/4"	36"	3 1/4"	51 1/2"	4.29'
	2	B20, B21	9"	3 1/8"	36"	3 1/4"	51 3/8"	4.28'
N. ABUT.	2	B1	9"	3 1/2"	36"	5 1/4"	53 3/4"	4.48'
	2	B2, B4-B6, B8-B10, B12-B14, B16-B18	9"	3 1/4"	36"	5 1/4"	53 1/2"	4.46'
	2	B20-B21	9"	3 1/8"	36"	5 1/4"	53 3/8"	4.45'

① SEE SHEET NO. 2 FOR BEAM LOCATIONS

	DIMENSIONS BETWEEN WORKING POINTS												ELEVATIONS			
POINT	STATION	X-COORDIN	Y-COORDIN	A	B	C	D	E	F	G	H	J	TOP OF ROADWAY	TOP OF RDWY TO BR. SEAT	BRIDGE SEAT	POINT
A	111+95.74	503005.095	209639.982		75.00		86.15	105.75			124.81	181.58	784.86	4.49	780.37	A
B	112+70.74	503005.095	209714.982			85.50		86.15	112.28	142.78		130.10	782.88	4.32	778.56	B
C	113+56.24	503005.096	209800.482						86.15	208.00	149.70		780.06	4.48	775.58	C
D	111+83.31	503090.345	209627.558					75.00		25.01	75.56		785.57			D
E	112+58.31	503090.345	209702.558						85.50		25.01	85.55	783.67			E
F	113+43.81	503090.345	209788.058									25.01	780.93			F
G	111+79.71	503115.095	209623.950								75.00		785.37	4.47	780.90	G
H	112+54.71	503115.095	209698.950									85.50	783.48	4.30	779.18	H
J	113+40.21	503115.095	209784.450										780.78	4.45	776.33	J

S.P. NO. 1901-148 (T.H. 13=117), S.P. NO. 019-605-028, S.P. NO. 179-020-031

CERTIFIED BY Todd R. Stevens 7/9/12
LICENSED PROFESSIONAL ENGINEER DATE
NAME: TODD R. STEVENS LIC. NO. 21312

TITLE: BRIDGE LAYOUT

DES: G.B.B. DR: N.A. APPROVED: 7-9-12
CHK: P.D.G. CHK: T.R.S.
SHEET NO. 3 OF 91 SHEETS

BRIDGE NO. 19036

FILENAME: IP_PWP.d1453300V9036.dgn
TIME : 7:33:26 AM
PLOTTED : 09-JUL-2012
PATH & FILENAME: Bridge/Final_Design/V19036/Cadd-Plan/19036.dgn

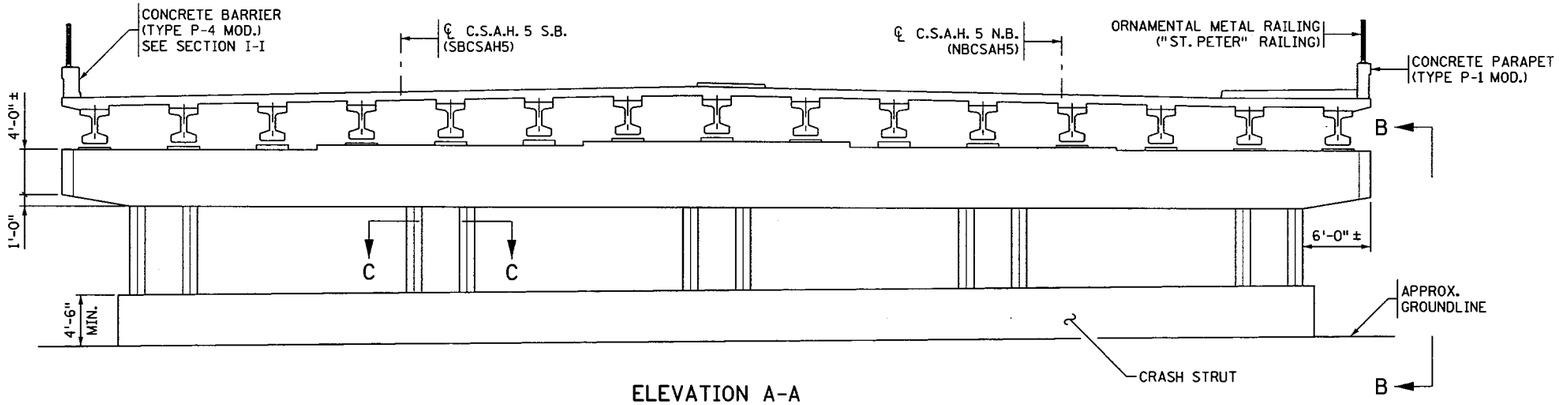

ELEVATION A-A

PIER ELEVATION

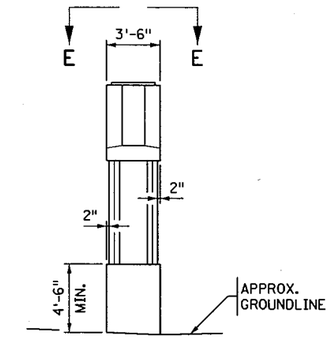

ELEVATION VIEW B-B

PIER END

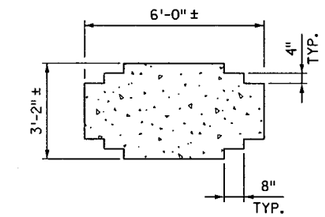

SECTION C-C

COLUMN SECTION

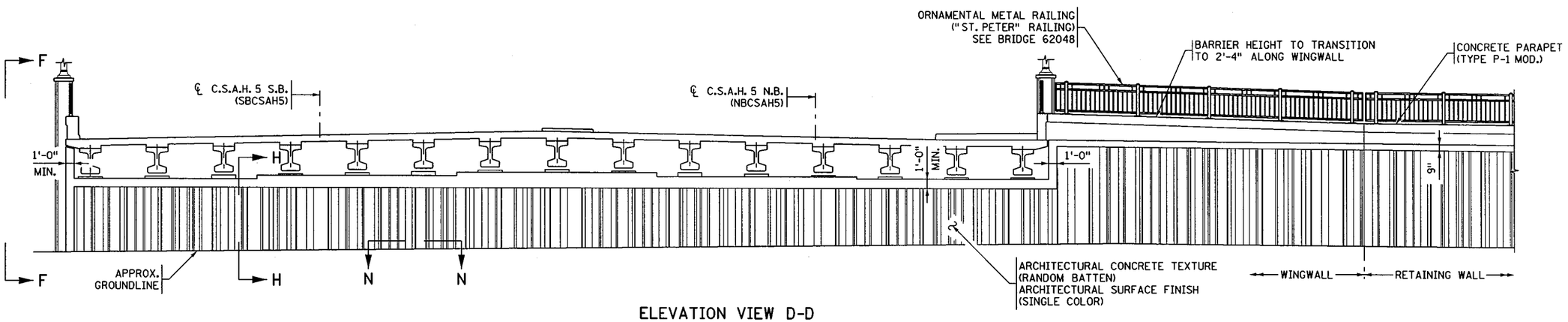

ELEVATION VIEW D-D

ABUTMENT FACE

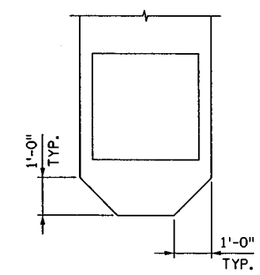

PLAN VIEW E-E

PIER CAP

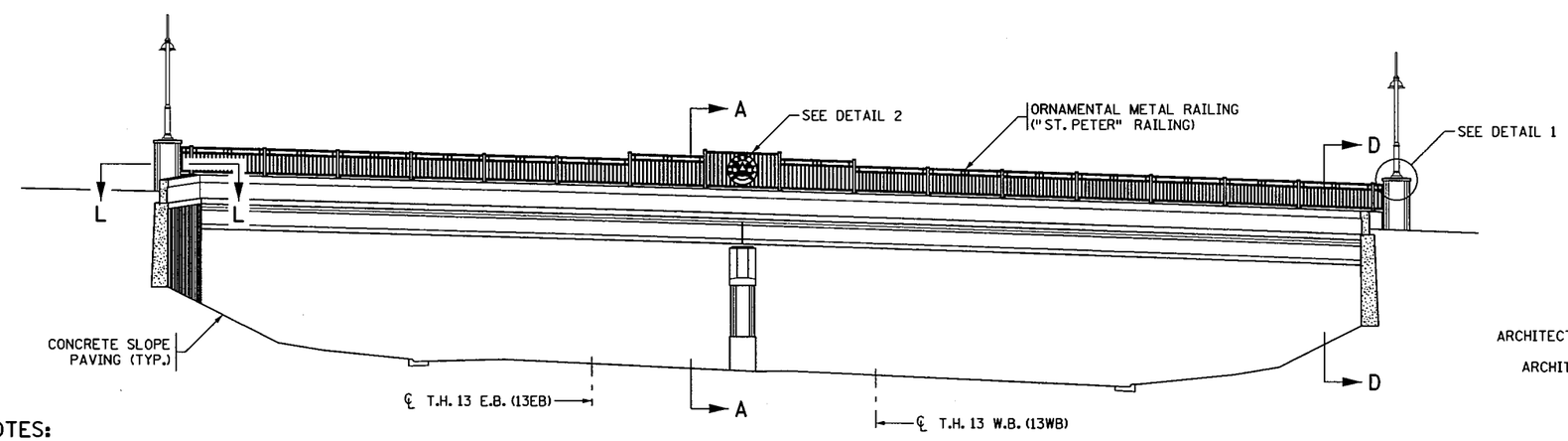

EAST ELEVATION

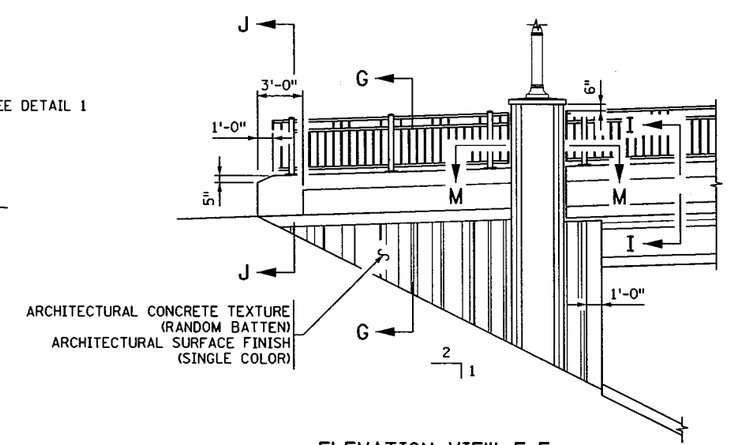

ELEVATION VIEW F-F

NOTES:

UNLESS OTHERWISE NOTED, PROVIDE A ½" CHAMFER ON ALL HORIZONTAL OR VERTICAL CORNERS / EDGES OF 90° OR LESS.

DIMENSIONS SHOWN ARE RECOMMENDED ONLY - FOR CHANGES OR REVISIONS CONSULT BRIDGE ARCHITECTURAL SPECIALIST.

SEE SHEET 5 FOR SECTION G-G, SECTION H-H, SECTION I-I, SECTION J-J, SECTION L-L, PLAN VIEW M-M, DETAIL 1, DETAIL 2 AND SECTION N-N.

S.P. NO. 1901-148 (T.H. 13=117), S.P. NO. 019-605-028, S.P. NO. 179-020-031

CERTIFIED BY Todd R. Stevens 7/9/12
LICENSED PROFESSIONAL ENGINEER DATE
NAME: TODD R. STEVENS LIC. NO. 21312

TITLE: AESTHETIC DETAILS

DES:	DR: M.A.S.	APPROVED: 7-9-12
CHK:	CHK: D.A.H.	

SHEET NO. 4 OF 91 SHEETS

BRIDGE NO. 19036

FILENAME: IP_PWP:dl453300\19036.dgn
TIME : 7:33:49 AM
PLOTTED : 09-JUL-2012
PATH & FILENAME: Bridge/Final_Design/1/19036/Cadd-Plan/19036.dgn

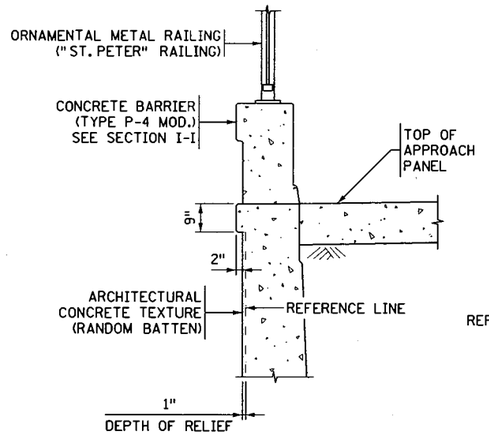

SECTION G-G

WINGWALL

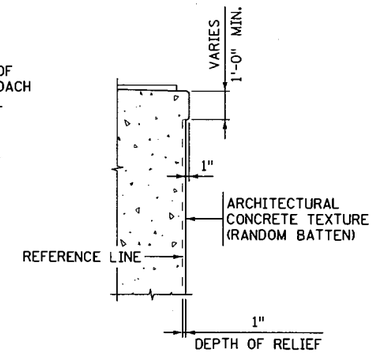

SECTION H-H

ABUTMENT FACE

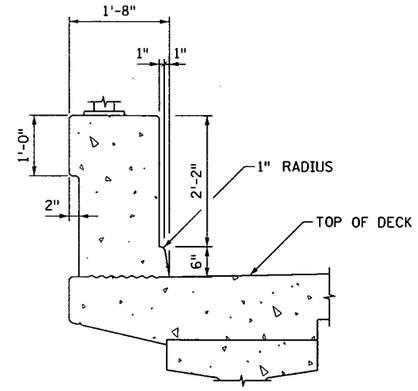

SECTION I-I

CONCRETE BARRIER (TYPE P-4 MOD.)

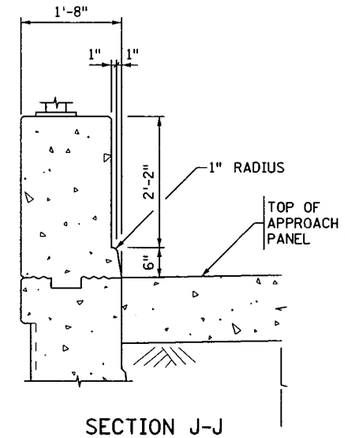

SECTION J-J

BARRIER END SECTION

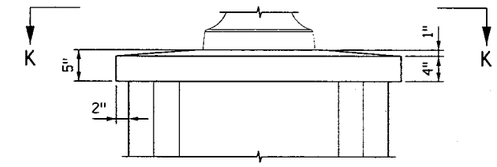

DETAIL 1

PRECAST CONCRETE CAP

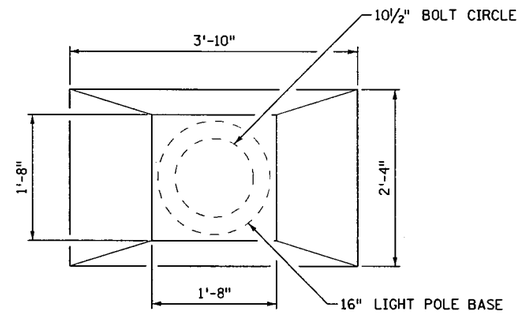

PLAN VIEW K-K

PRECAST CONCRETE CAP

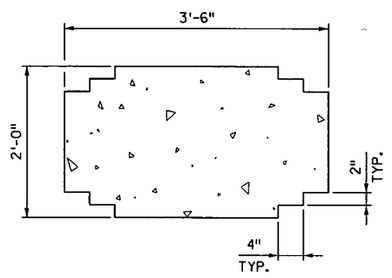

SECTION L-L

CORNER PILASTER

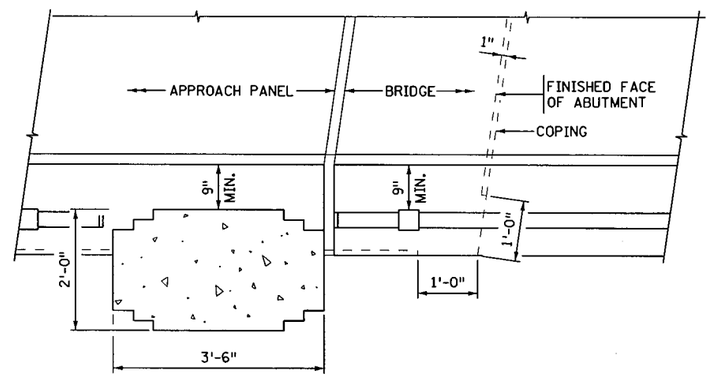

PLAN VIEW M-M

NORTHWEST ABUTMENT CORNER

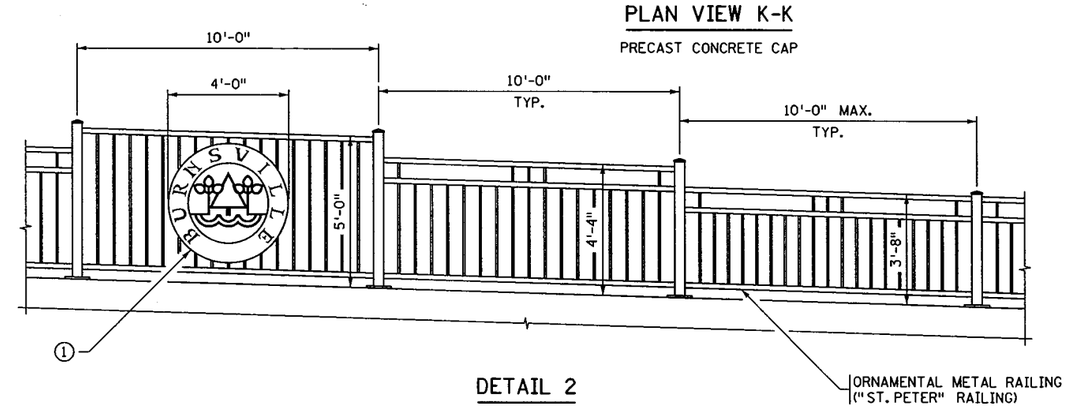

DETAIL 2

ORNAMENTAL METAL RAILING WITH BURNSVILLE EMBLEM

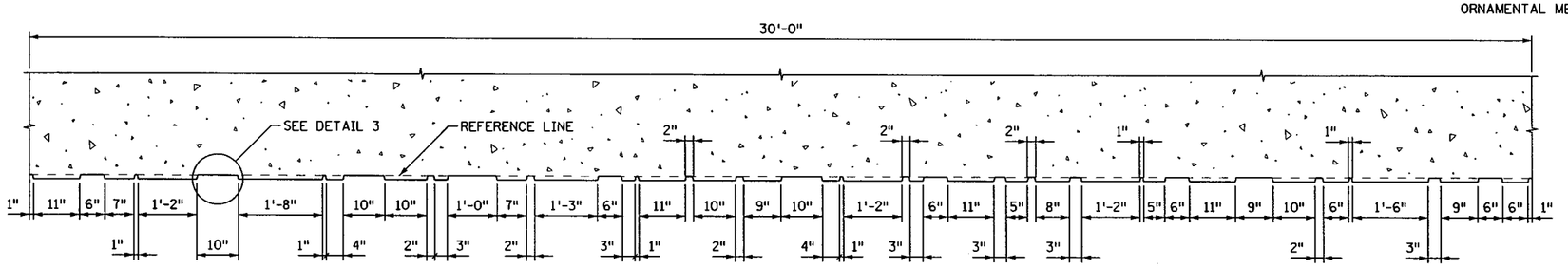

SECTION N-N

ARCHITECTURAL CONCRETE TEXTURE
(RANDOM BATTEN)

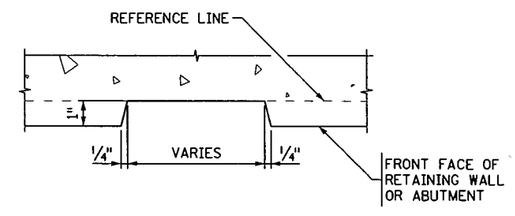

DETAIL 3

RANDOM BATTEN REVEAL

NOTES:

UNLESS OTHERWISE NOTED, PROVIDE A ½" CHAMFER ON ALL HORIZONTAL OR VERTICAL CORNERS / EDGES OF 90° OR LESS.

DIMENSIONS SHOWN ARE RECOMMENDED ONLY - FOR CHANGES OR REVISIONS CONSULT BRIDGE ARCHITECTURAL SPECIALIST.

(1) SEE ARCHITECTURAL SPECIALIST FOR ASSISTANCE WITH LOGO FINAL DESIGN DETAILS.

SEE SHEET 5 FOR SECTION G-G, SECTION H-H, SECTION I-I, SECTION J-J, SECTION L-L, PLAN VIEW M-M, DETAIL 2 AND SECTION N-N LOCATIONS.

S.P. NO. 1901-148 (T.H. 13=117), S.P. NO. 019-605-028, S.P. NO. 179-020-031

CERTIFIED BY Todd R. Stevens 7/9/12 (LICENSED PROFESSIONAL ENGINEER, DATE) NAME: TODD R. STEVENS LIC. NO. 21312	TITLE: AESTHETIC DETAILS	DES: / DR: M.A.S. / CHK: / CHK: D.A.H. / APPROVED: 7-9-12	BRIDGE NO. 19036
		SHEET NO. 5 OF 91 SHEETS	

FILENAME: IP_PWP:df453300\9036dgn
TIME : 7:34:10 AM
PLOTTED : 09-JUL-2012
PATH & FILENAME: Bridge/Final_Design/1/19036/Cadd-Plan/19036.dgn

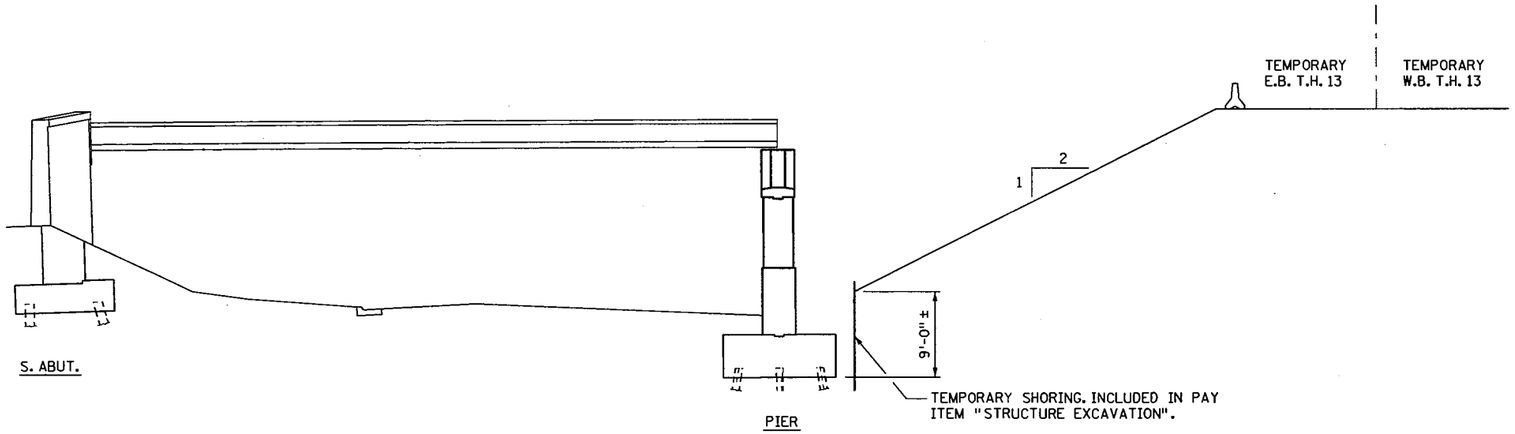

STAGE 4

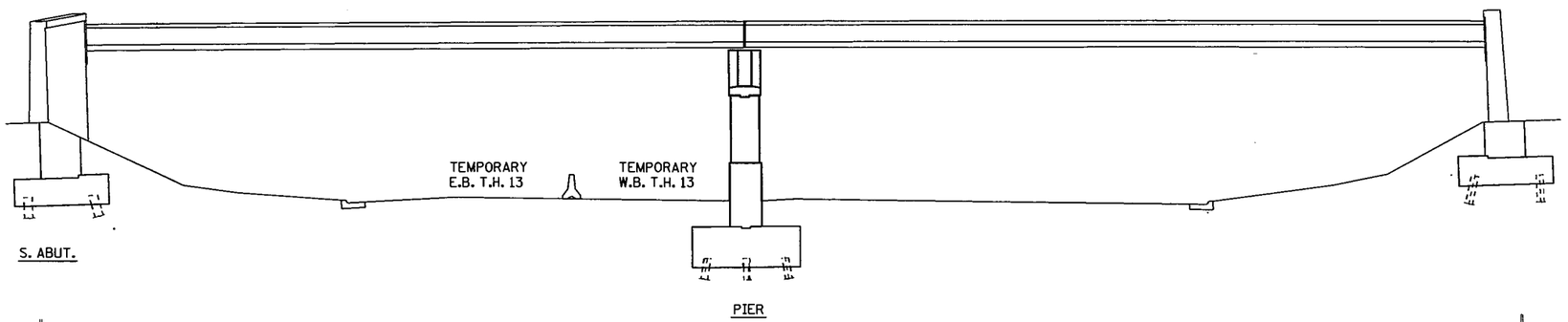

STAGE 5A

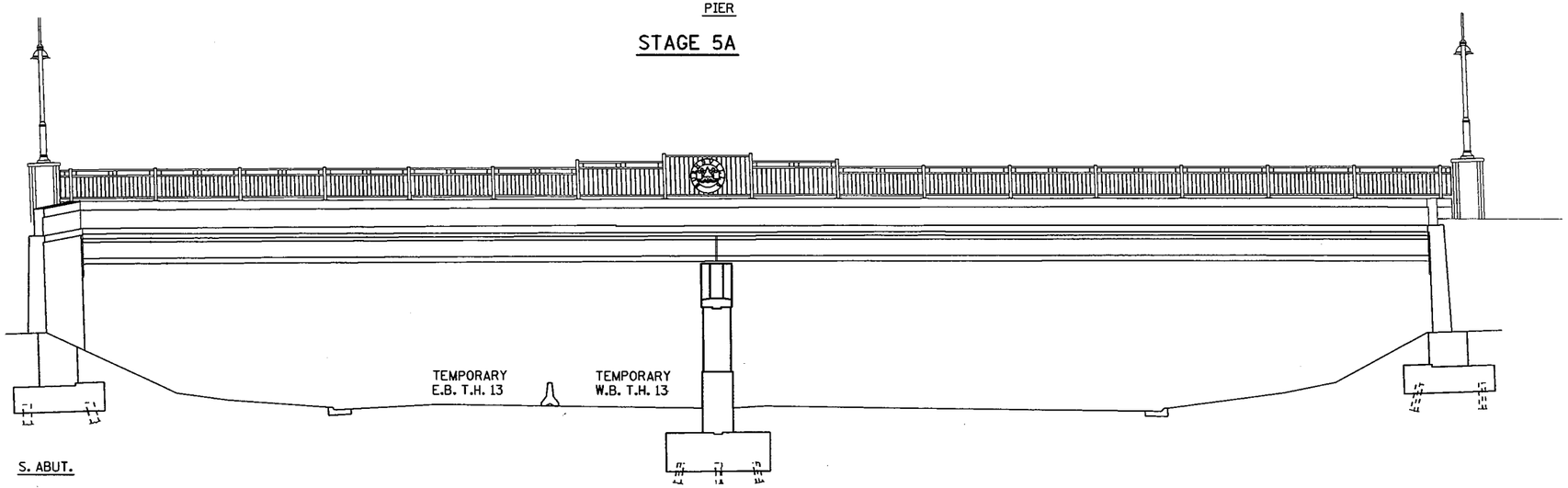

STAGE 5B

NOTES:

STAGE 4: ONE LANE OF TRAFFIC IN EACH DIRECTION ON T.H. 13, ON EXISTING GRADE ON NORTH SIDE OF T.H. 13 CORRIDOR. C.S.A.H. 5 CLOSED.

1) CONSTRUCT SOUTH ABUTMENT.
2) CONSTRUCT PIER.
3) SET BEAMS FOR SOUTH SPAN (OPTIONAL).

STAGE 5A: ONE LANE OF TRAFFIC IN EACH DIRECTION ON T.H. 13, ON NEW GRADE ON SOUTH SIDE OF T.H. 13 CORRIDOR. C.S.A.H. 5 CLOSED.

1) CONSTRUCT NORTH ABUTMENT.
2) SET BEAMS FOR NORTH SPAN.

STAGE 5B: ONE LANE OF TRAFFIC IN EACH DIRECTION ON T.H. 13, ON NEW GRADE ON SOUTH SIDE OF T.H. 13 CORRIDOR. C.S.A.H. 5 CLOSED.

1) CONSTRUCT BRIDGE DECK.
2) CONSTRUCT SIDEWALKS, MEDIAN, BARRIERS AND RAILINGS.

TIME : 10:52:56 AM
PLOTTED : 09-JUL-2012
PATH & FILENAME: Bridge/Final_Design/19036/Cadd-Plan/br19036_stg.dgn
FILENAME: IP_PWP-d1453300\br19036_stg.dgn

S.P. NO. 1901-148 (T.H. 13=117), S.P. NO. 019-605-028, S.P. NO. 179-020-031

CERTIFIED BY Todd R. Stevens 7/9/12
LICENSED PROFESSIONAL ENGINEER DATE
NAME: TODD R. STEVENS LIC. NO. 21312

TITLE: STAGING DETAILS

DES:	GBB	DR:	RLV	APPROVED: 7-9-12
CHK:	PDG	CHK:	TRS	

SHEET NO. 6 OF 91 SHEETS

BRIDGE NO. 19036

SOUTH ABUTMENT COMPUTED PILE LOAD - TONS/PILE	
FACTORED DEAD LOAD + EARTH PRESSURE	109.9
FACTORED LIVE LOAD	18.4
✱FACTORED DESIGN LOAD	128.2

✱BASED ON STRENGTH I LOAD COMBINATION

SOUTH ABUTMENT REQUIRED NOMINAL PILE BEARING RESISTANCE R_n- TONS/PILE		
FIELD CONTROL METHOD	φ_{dyn}	✱R_n
MN/DOT NOMINAL RESISTANCE FORMULA	0.40	320.6
PDA	0.65	197.3

✱R_n = (FACTORED DESIGN LOAD) / φ_{dyn}

SOUTH ABUTMENT PILE NOTES

3 STEEL H TEST PILES 55 FT. LONG
37 STEEL H PILES EST. LENGTH 45 FT.
40 STEEL H PILES REQ'D FOR SOUTH ABUTMENT.

PILE SPACING SHOWN IS AT BOTTOM OF FOOTING.

PILES MARKED THUS H— TO BE BATTERED 3" PER FOOT IN DIRECTION SHOWN.

PILES TO BE HP 12 X 53

FOR PILE SPLICE DETAILS SEE DETAIL B202.

SUMMARY OF QUANTITIES FOR SOUTH ABUTMENT

	STRUCTURAL CONCRETE (1A43)	220 CU. YD.
	STRUCTURAL CONCRETE (3Y43)	371 CU. YD.
	REINFORCEMENT BARS	20240 POUND
	REINFORCEMENT BARS (EPOXY COATED)	31160 POUND
(1)	STEEL H-PILING DELIVERED 12"	1665 LIN. FT.
(1)	STEEL H-PILING DRIVEN 12"	1665 LIN. FT.
	STEEL H-TEST PILE 55 FT. LONG 12"	3 EACH
	ARCHITECTURAL CONCRETE TEXTURE (RANDOM BATTEN)	2150 SQ. FT.
	ARCHITECTURAL SURFACE FINISH (SINGLE COLOR)	2150 SQ. FT.
	PRECAST CONCRETE CAP	2 EACH
(2)	MEMBRANE WATERPROOFING SYSTEM	205 LIN. FT.

(1) DOES NOT INCLUDE TEST PILES.

(2) MEMBRANE WATERPROOFING SYSTEM PER Mn/DOT 2481.3B. INCIDENTAL TO "STRUCTURAL CONCRETE (3Y43)".

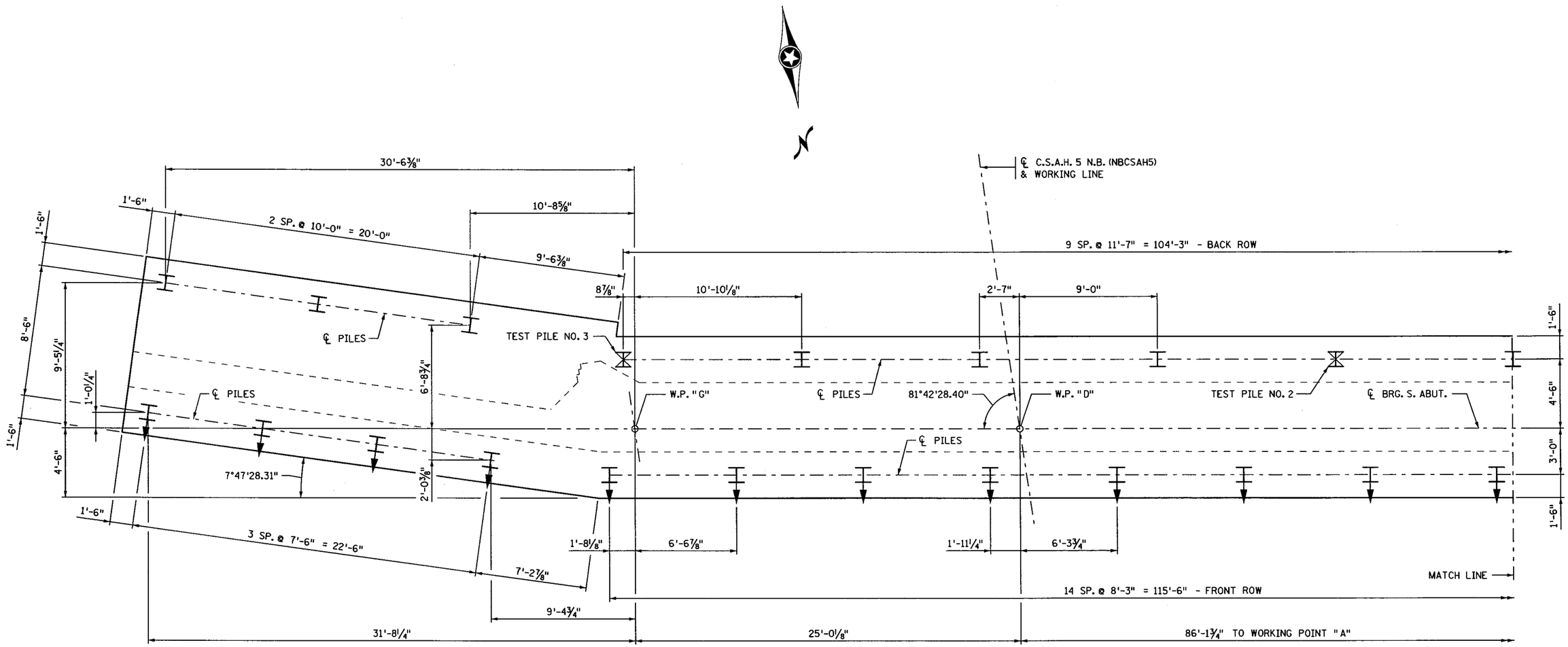

PILE LAYOUT

SOUTH EAST

S.P. NO. 1901-148 (T.H. 13=117), S.P. NO. 019-605-028, S.P. NO. 179-020-031

CERTIFIED BY Todd R. Stevens LICENSED PROFESSIONAL ENGINEER 7/9/12 DATE	TITLE: SOUTH ABUTMENT DETAILS	DES: GBB DR: BEP CHK: PDG CHK: TRS	APPROVED: 7-9-12	BRIDGE NO. 19036
NAME: TODD R. STEVENS LIC. NO. 21312		SHEET NO. 7 OF 91 SHEETS		

FILENAME: 1P_PWP:d1453300\19036_south.dbt
TIME : 10:56:23 AM
PLOTTED : 09-JUL-2012
PATH & FILENAME: Bridge/Final_Design/1/19036/Cadd-Plan/19036_south.dbt

NOTES:

PILE SPACING SHOWN IS AT BOTTOM OF FOOTING.

PILES MARKED THUS H— TO BE BATTERED 3" PER FOOT IN DIRECTION SHOWN.

PILES TO BE HP 12 X 53

FOR PILE SPLICE DETAILS SEE DETAIL B202.

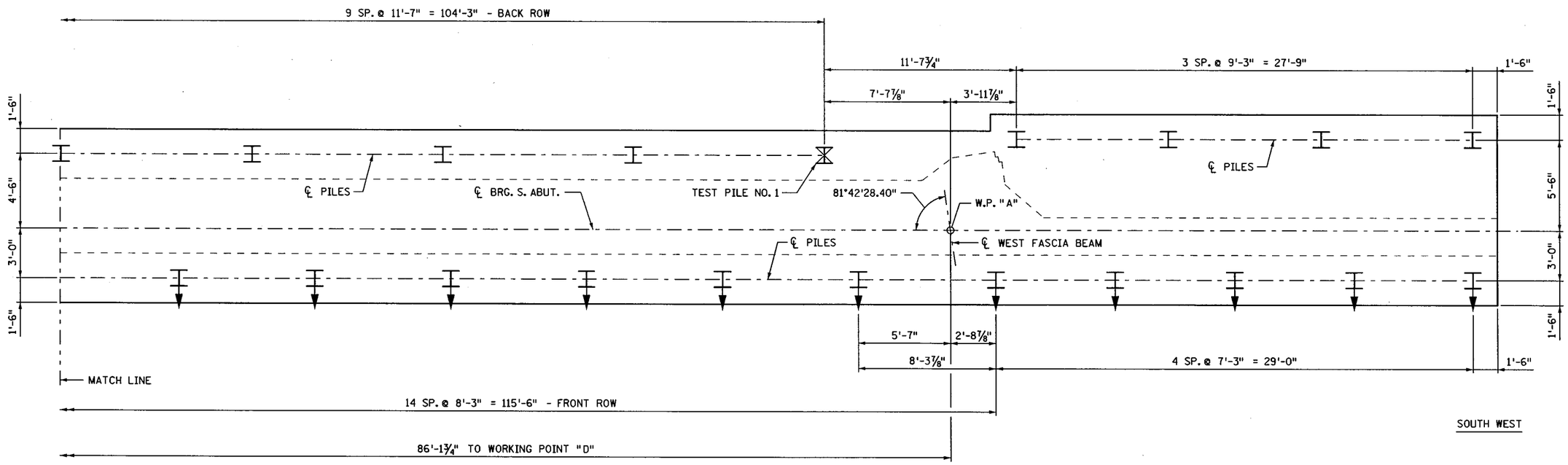

PILE LAYOUT

CERTIFIED BY Todd R. Stevens 7/9/12 (LICENSED PROFESSIONAL ENGINEER / DATE) NAME: TODD R. STEVENS LIC. NO. 21312	TITLE: SOUTH ABUTMENT DETAILS	DES: GBB DR: BEP CHK: PDG CHK: TRS	APPROVED: 7-9-12	BRIDGE NO. 19036
S.P. NO. 1901-148 (T.H. 13=117), S.P. NO. 019-605-028, S.P. NO. 179-020-031		SHEET NO. 8 OF 91 SHEETS		

FILENAME: IP_PWP:d1453300V9036_south abt
TIME : 3:56:01 PM
PLOTTED : 02-JUL-2012
PATH & FILENAME: Bridge/Final_Design/1/19036/Cadd-Plan/19036_south abt

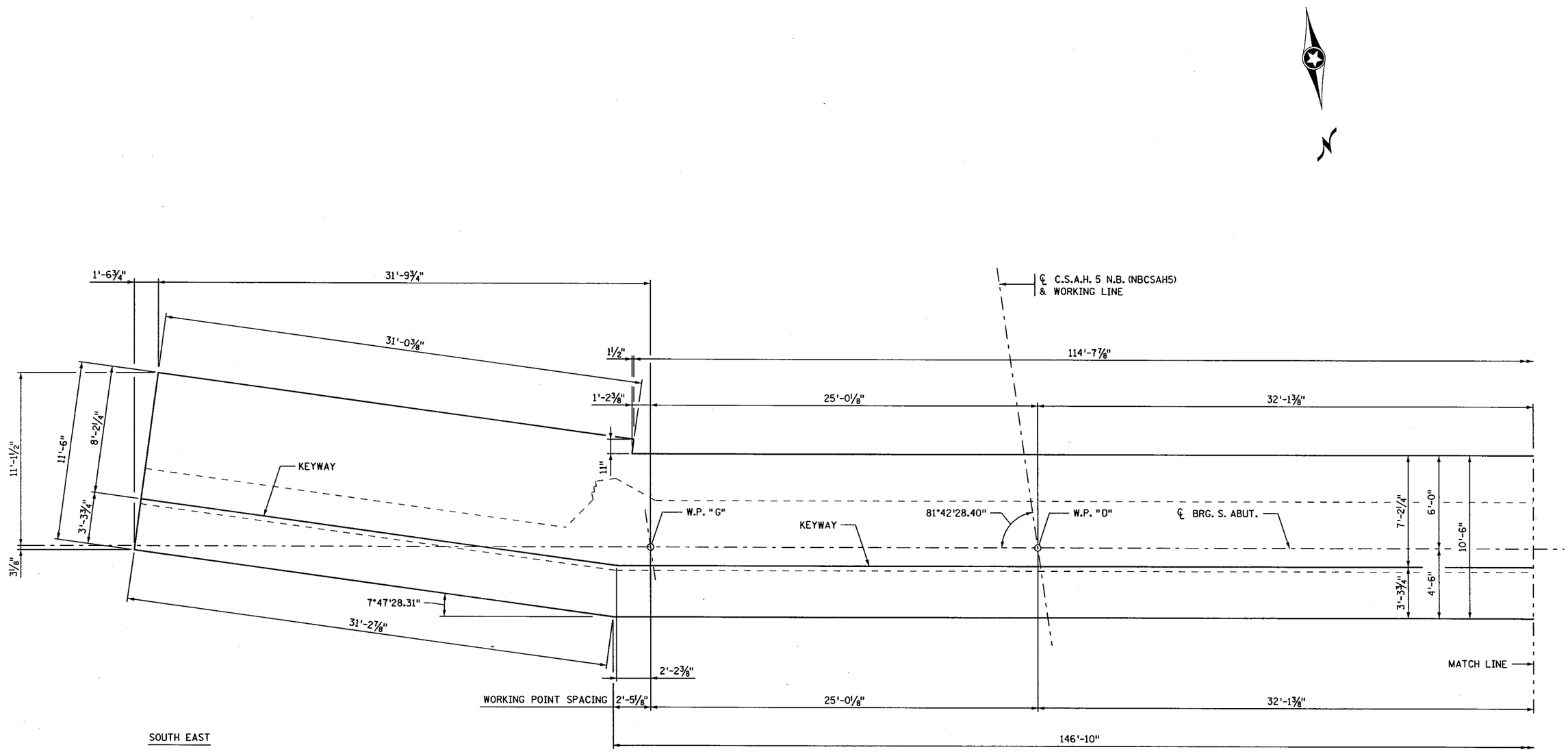

FOOTING PLAN

CERTIFIED BY *Todd R. Stevens* 7/9/12 (LICENSED PROFESSIONAL ENGINEER / DATE) NAME: TODD R. STEVENS LIC. NO. 21312	TITLE: SOUTH ABUTMENT DETAILS	DES: GBB DR: BEP CHK: PDG CHK: TRS	APPROVED: 7-9-12	SHEET NO. 9 OF 91 SHEETS	BRIDGE NO. 19036

S.P. NO. 1901-148 (T.H. 13=117), S.P. NO. 019-605-028, S.P. NO. 179-020-031

FILENAME: IP_PWP:d1453300\9036_south abt

TIME : 3:56:12 PM
PLOTTED : 02-JUL-2012
PATH & FILENAME: Bridge/Final_Design/1/19036/Cadd-Plan/19036_south abt

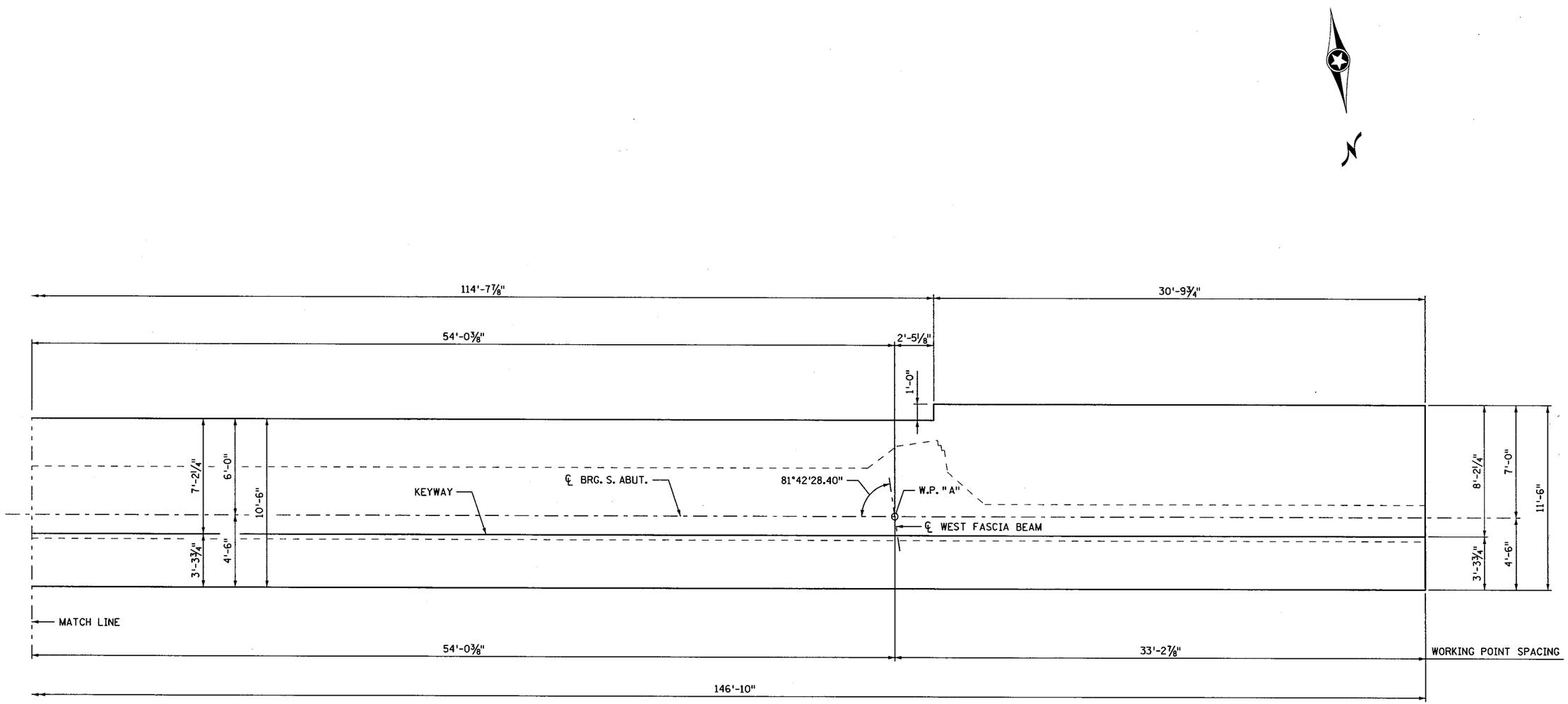

FOOTING PLAN

SOUTH WEST

FILENAME: IP_PWP:d1453300\19036_south abt

TIME : 3:56:24 PM
PLOTTED : 02-JUL-2012
PATH & FILENAME: Bridge/Final_Design/1/19036/Cadd-Plan/19036_south abt

S.P. NO. 1901-148 (T.H. 13=117), S.P. NO. 019-605-028, S.P. NO. 179-020-031

CERTIFIED BY Todd R. Stevens 7/9/12
LICENSED PROFESSIONAL ENGINEER DATE
NAME: TODD R. STEVENS LIC. NO. 21312

TITLE: SOUTH ABUTMENT DETAILS

DES: GBB	DR: BEP	APPROVED: 7-9-12	BRIDGE NO. 19036
CHK: PDG	CHK: TRS		
SHEET NO. 10 OF 91 SHEETS			

NOTES:

1. CONSTRUCTION JOINT AND 2" × 6" KEYWAY IN PARAPET. CONSTRUCTION JOINT AND 2" × 12" KEYWAY IN BRIDGE SEAT.
2. CONSTRUCTION JOINT AND 2" × 6" KEYWAY.
3. MEMBRANE WATERPROOFING SYSTEM PER Mn/DOT 2481.3B.
4. 4" NOMINAL DIAMETER PERFORATED PIPE INCLUDED IN ITEM "DRAINAGE SYSTEM (B910)".
5. ARCHITECTURAL CONCRETE TEXTURE (RANDOM BATTEN) & ARCHITECTURAL SURFACE FINISH (SINGLE COLOR).
6. 72 HOUR MINIMUM TIME DELAY REQUIRED BETWEEN CONCRETE POURS OF ADJACENT ABUTMENT SECTIONS THAT HAVE VERTICAL CONSTRUCTION JOINTS.
7. 3" DIA. PIPE SLEEVE INCLUDED IN BID ITEM "CONDUIT SYSTEM (FUTURE)". SEE CONDUIT SYSTEM DETAILS.
8. ELEVATIONS AT FRONT FACE OF PARAPET.

END BLOCK TO BE INCLUDED IN SUPERSTRUCTURE QUANTITIES.

SEE SHEET 15 FOR SECTIONS A-A & B-B.
SEE SHEET 13 FOR SECTIONS D-D, E-E, F-F & K-K.

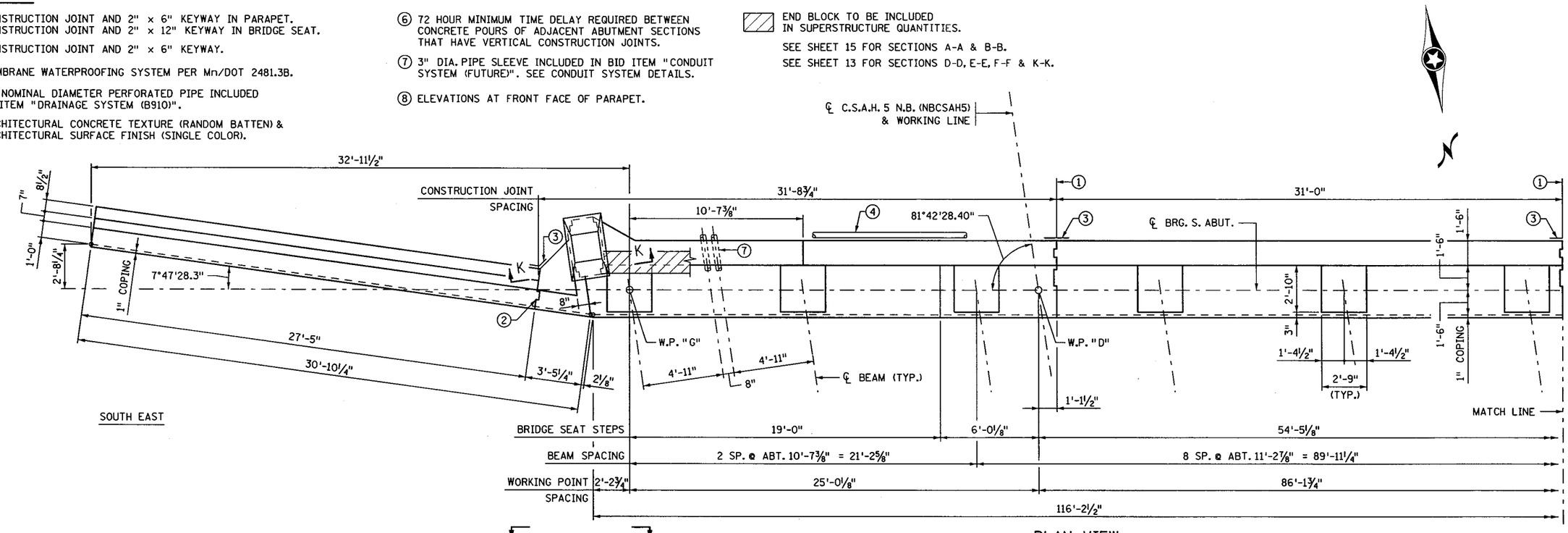

CERTIFIED BY *Todd R. Stevens* 7/9/12 LICENSED PROFESSIONAL ENGINEER DATE NAME: TODD R. STEVENS LIC. NO. 21312	TITLE: SOUTH ABUTMENT DETAILS	DES: GBB DR: BEP CHK: PDG CHK: TRS	APPROVED: 7-9-12	BRIDGE NO. 19036
S.P. NO. 1901-148 (T.H. 13=117), S.P. NO. 019-605-028, S.P. NO. 179-020-031		SHEET NO. 11 OF 91 SHEETS		

FILENAME: IP_PWP:d1453300V9036_south abt
TIME : 8:17:28 AM
PLOTTED : 09-JUL-2012
PATH & FILENAME: Bridge/Final_Design/1/19036/Cadd-Plan/19036_south abt

NOTES:

1. CONSTRUCTION JOINT AND 2" x 6" KEYWAY IN PARAPET. CONSTRUCTION JOINT AND 2" x 12" KEYWAY IN BRIDGE SEAT.
2. CONSTRUCTION JOINT AND 2" x 6" KEYWAY.
3. MEMBRANE WATERPROOFING SYSTEM PER Mn/DOT 2481.3B.
4. 4" NOMINAL DIAMETER PERFORATED PIPE INCLUDED IN ITEM "DRAINAGE SYSTEM (B910)".
5. ARCHITECTURAL CONCRETE TEXTURE (RANDOM BATTEN) & ARCHITECTURAL SURFACE FINISH (SINGLE COLOR).
6. 72 HOUR MINIMUM TIME DELAY REQUIRED BETWEEN CONCRETE POURS OF ADJACENT ABUTMENT SECTIONS THAT HAVE VERTICAL CONSTRUCTION JOINTS.
7. 3" DIA. PIPE SLEEVE INCLUDED IN BID ITEM "CONDUIT SYSTEM (SIGNALS)". SEE CONDUIT SYSTEM DETAILS.
8. ELEVATIONS AT FRONT FACE OF PARAPET.

END BLOCK TO BE INCLUDED IN SUPERSTRUCTURE QUANTITIES.

SEE SHEET 15 FOR SECTIONS A-A & C-C.
SEE SHEET 14 FOR SECTIONS G-G, H-H, J-J & L-L.

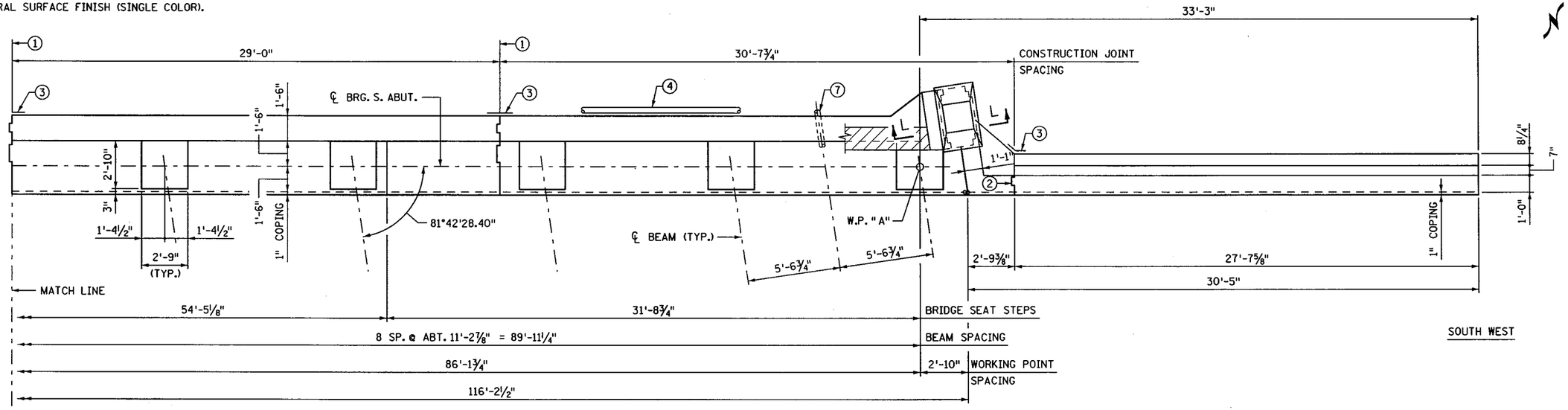

PLAN VIEW

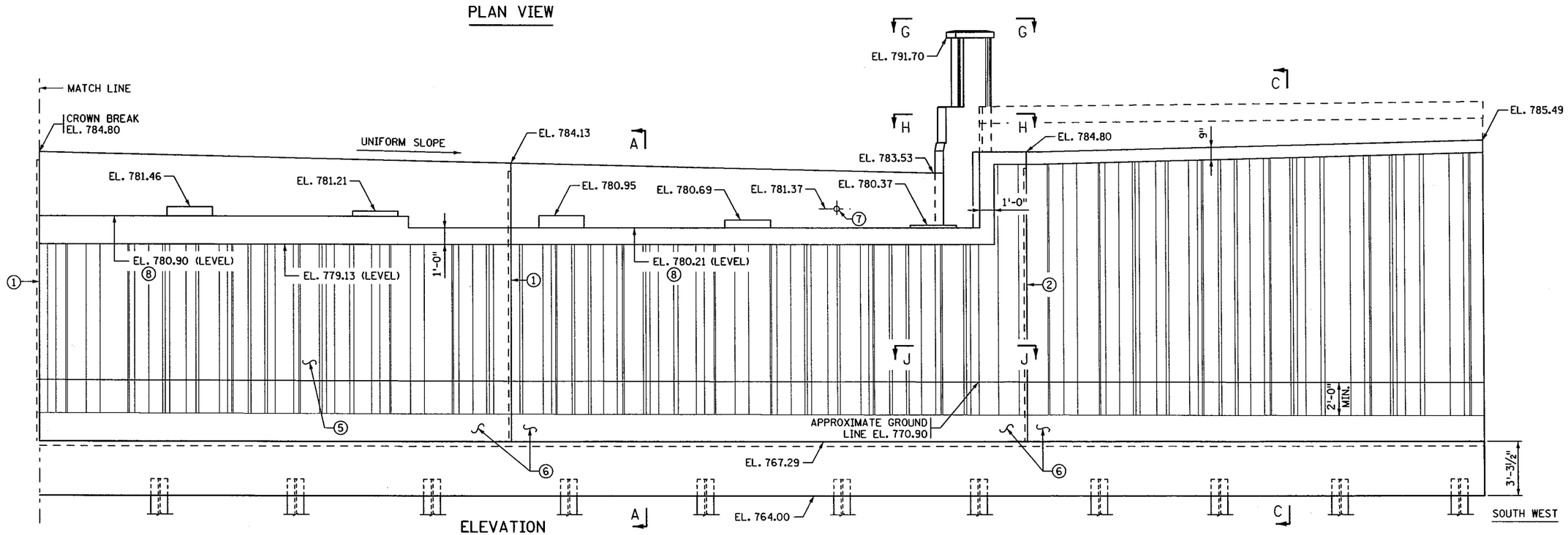

ELEVATION

S.P. NO. 1901-148 (T.H. 13=117), S.P. NO. 019-605-028, S.P. NO. 179-020-031

CERTIFIED BY Todd R. Stevens 7/9/12
LICENSED PROFESSIONAL ENGINEER DATE
NAME: TODD R. STEVENS LIC. NO. 21312

TITLE: SOUTH ABUTMENT DETAILS

DES: GBB	DR: BEP	APPROVED: 7-9-12
CHK: PDG	CHK: TRS	

SHEET NO. 12 OF 91 SHEETS

BRIDGE NO. 19036

FILENAME: IP_PWP:dl453300V9036_south abt
TIME : 8:37:26 AM
PLOTTED : 09-JUL-2012
PATH & FILENAME: Bridge/Final_Design/1/19036/Cadd-Plan/19036_south abt

NOTES:

1. 1½" Ø R.S.C. (LIGHTING). SEE CONDUIT SYSTEM DETAILS.
2. CONSTRUCTION JOINT AND 2" x 6" KEYWAY.
3. MEMBRANE WATERPROOFING SYSTEM PER MnDOT 2481.3B.

F.F. DENOTES FRONT FACE.

B.F. DENOTES BACK FACE.

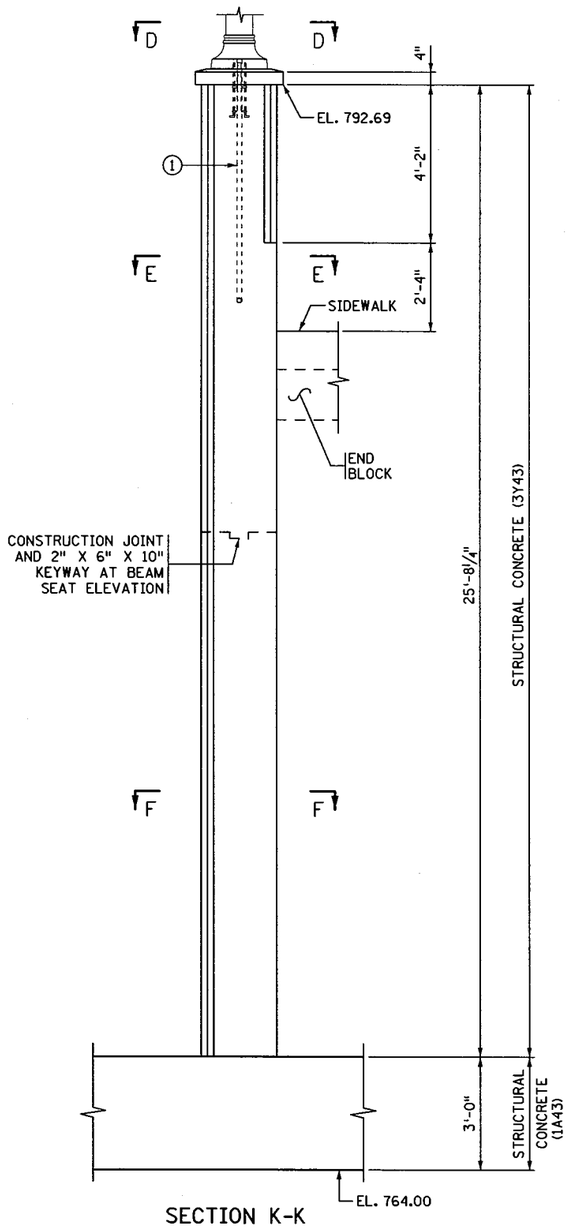

SECTION K-K

(SOUTHEAST CORNER)

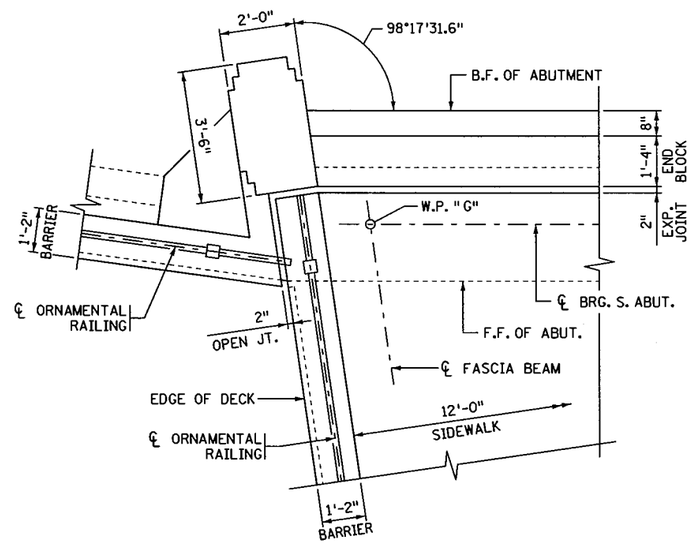

SOUTHEAST CORNER DETAIL

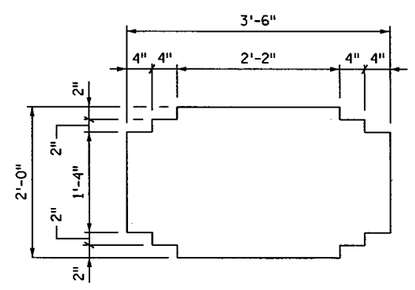

SECTION THROUGH PILASTER

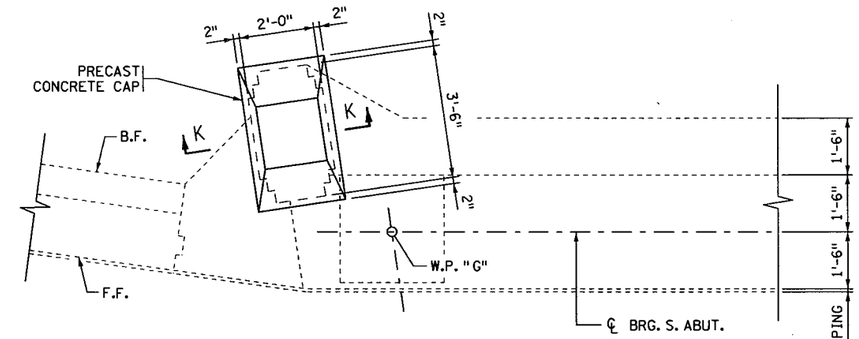

SECTION D-D

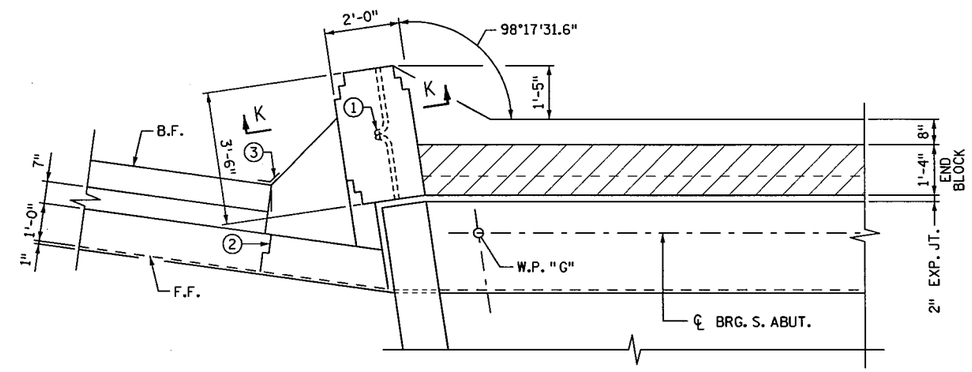

SECTION E-E

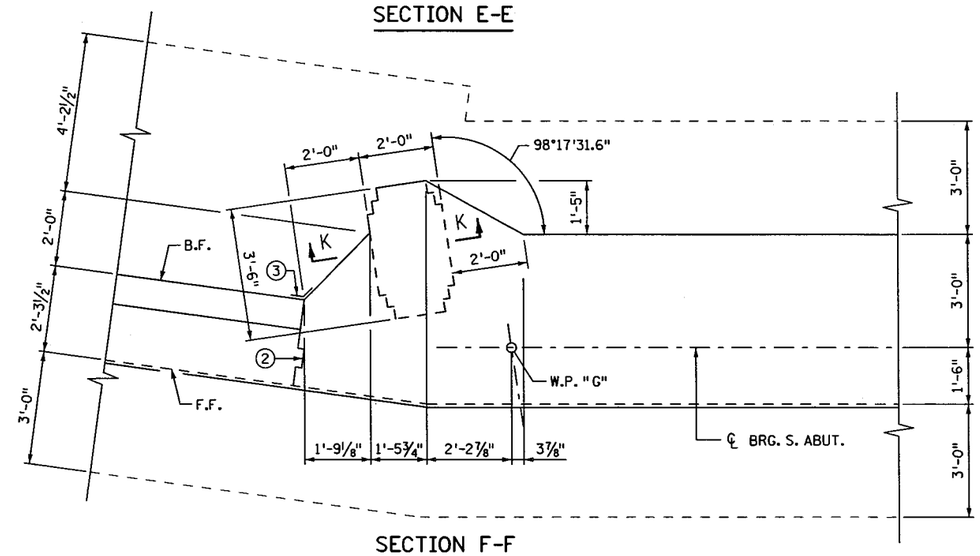

SECTION F-F

S.P. NO. 1901-148 (T.H. 13=117), S.P. NO. 019-605-028, S.P. NO. 179-020-031

CERTIFIED BY *Todd R. Stevens* LICENSED PROFESSIONAL ENGINEER 7/9/12 DATE NAME: TODD R. STEVENS LIC. NO. 21312	TITLE: SOUTH ABUTMENT DETAILS	DES: GBB DR: BEP CHK: PDG CHK: TRS SHEET NO. 13 OF 91 SHEETS	APPROVED: 7-9-12	BRIDGE NO. 19036

TIME : 8:40:58 AM
PLOTTED : 09-JUL-2012
PATH & FILENAME: Bridge/Final_Design/1/19036/Cadd-Plan/19036_south abt
FILENAME: IP_PWP:d1453300V9036_south abt

NOTES:

1. 1½" Ø R.S.C. (LIGHTING). SEE CONDUIT SYSTEM DETAILS.
2. CONSTRUCTION JOINT AND 2" x 6" KEYWAY.
3. MEMBRANE WATERPROOFING SYSTEM PER MnDOT 2481.3B.
4. FRONT FACE OF PILASTER TO MATCH THE FRONT FACE OF CONCRETE BARRIER (TYPE MOD P-4).

F.F. DENOTES FRONT FACE.

B.F. DENOTES BACK FACE.

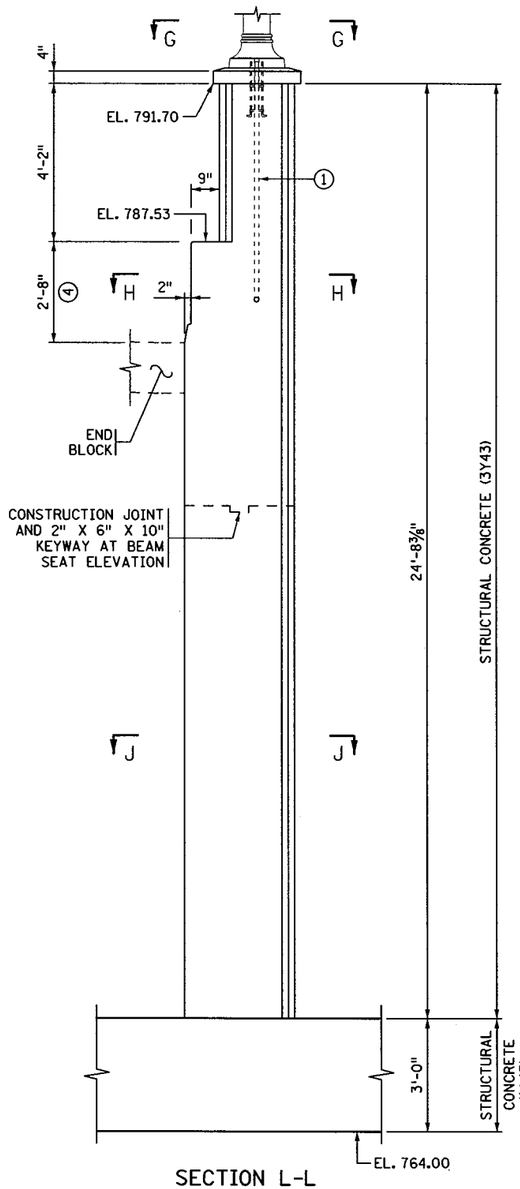

SECTION L-L

(SOUTHWEST CORNER)

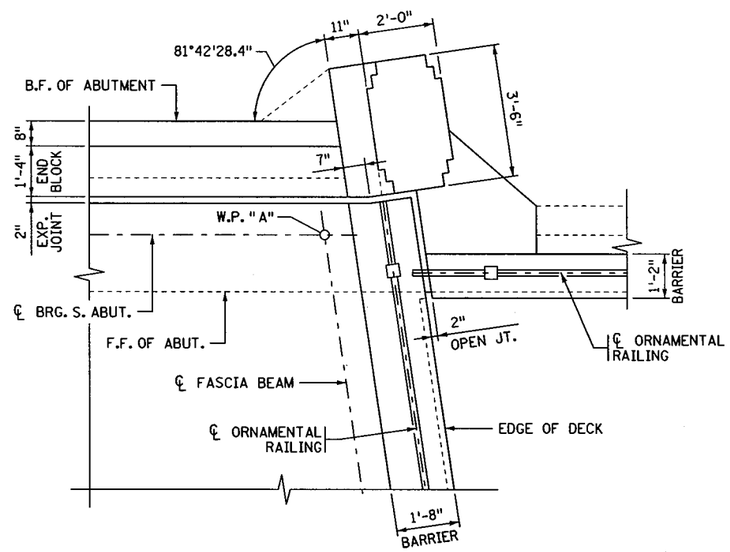

SOUTHWEST CORNER DETAIL

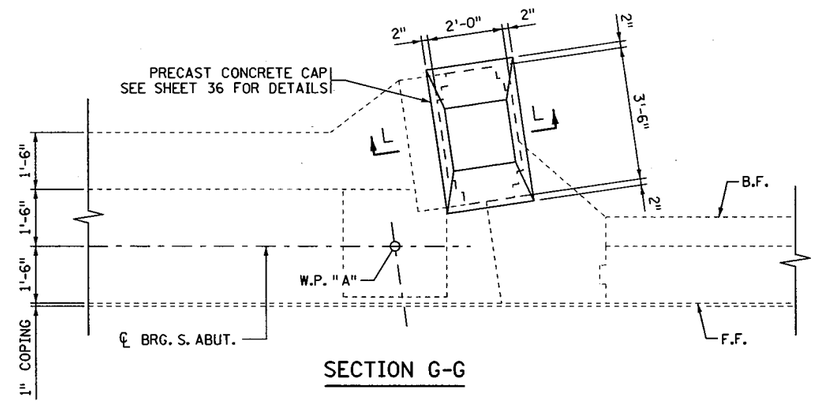

SECTION G-G

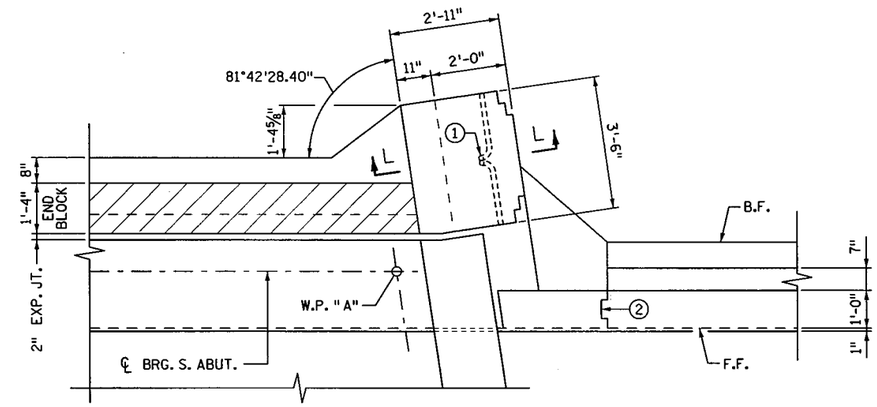

SECTION H-H

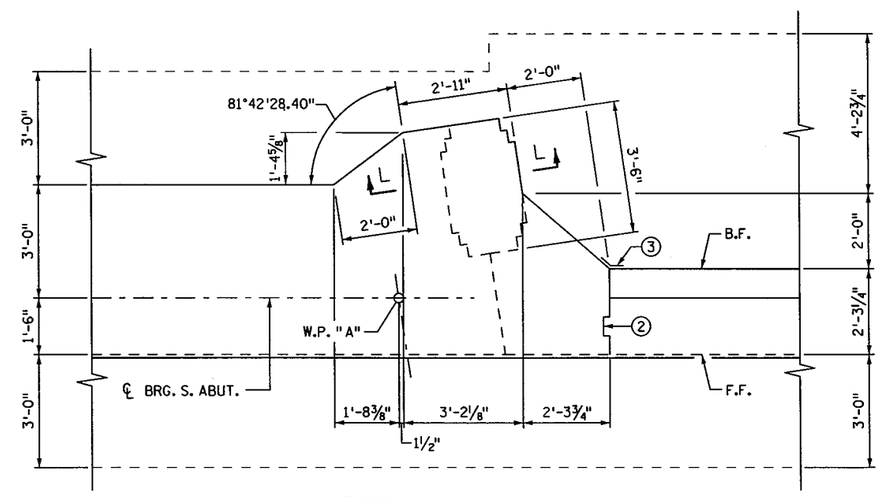

SECTION J-J

S.P. NO. 1901-148 (T.H. 13=117), S.P. NO. 019-605-028, S.P. NO. 179-020-031

CERTIFIED BY Todd R. Stevens 7/9/12
LICENSED PROFESSIONAL ENGINEER DATE
NAME: TODD R. STEVENS LIC. NO. 21312

TITLE: SOUTH ABUTMENT DETAILS

DES: GBB	DR: BEP	APPROVED: 7-9-12
CHK: PDG	CHK: TRS	

SHEET NO. 14 OF 91 SHEETS

BRIDGE NO. 19036

TIME : 8:42:36 AM
PLOTTED : 09-JUL-2012
PATH & FILENAME: Bridge/Final_Design/1/19036/Cadd-Plan/19036_south abt
FILENAME: IP_PWF:d1453300\90036_south abt

NOTES:

1. CONSTRUCTION JOINT & 2" X 6" KEYWAY.
2. MEMBRANE WATERPROOFING SYSTEM PER Mn/DOT 2481.3B.
3. 4" NOMINAL DIAMETER PERFORATED PIPE INCLUDED IN ITEM "DRAINAGE SYSTEM (B910)".
4. ARCHITECTURAL CONCRETE TEXTURE (RANDOM BATTEN) & ARCHITECTURAL SURFACE FINISH (SINGLE COLOR). SEE SHEET 4 & 5 FOR AESTHETIC DETAILS.

END BLOCK TO BE INCLUDED IN SUPERSTRUCTURE QUANTITIES.

F.F. DENOTES FRONT FACE

B.F. DENOTES BACK FACE

SEE SHEET 11 FOR LOCATION OF SECTION A-A & B-B.

SEE SHEET 12 FOR LOCATION OF SECTION C-C.

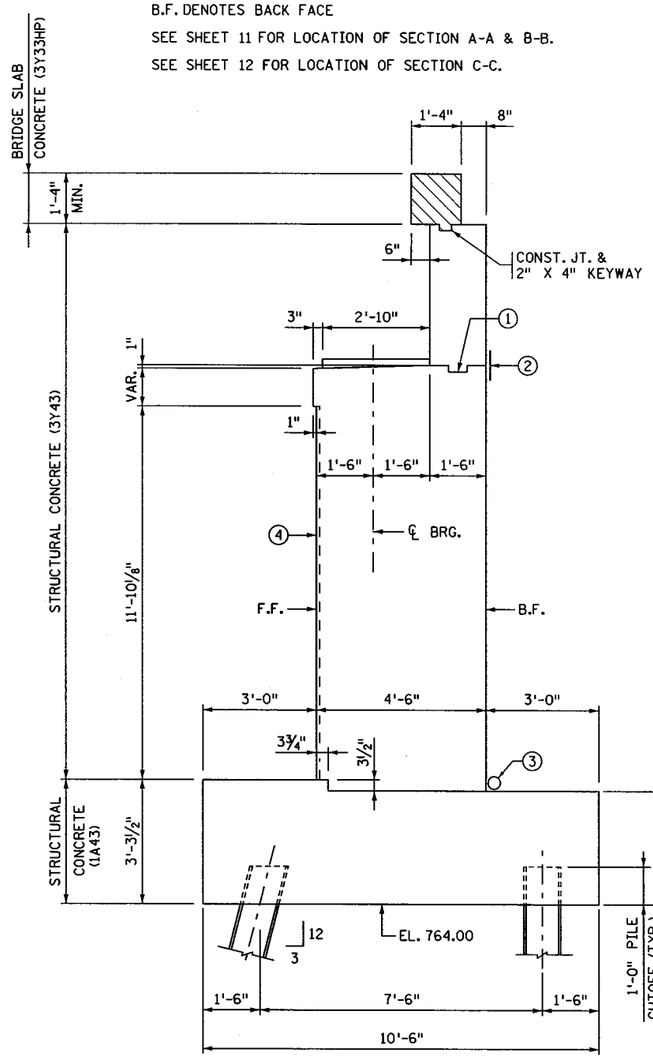

SECTION A-A

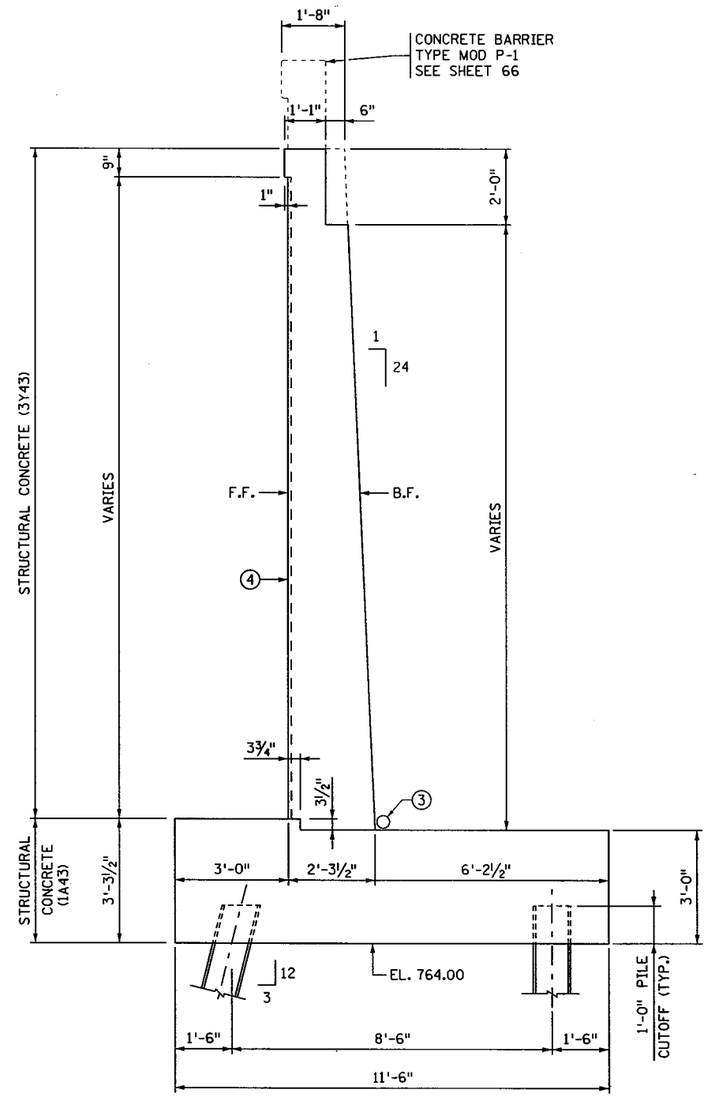

SECTION B-B

(SOUTH EAST WINGWALL)

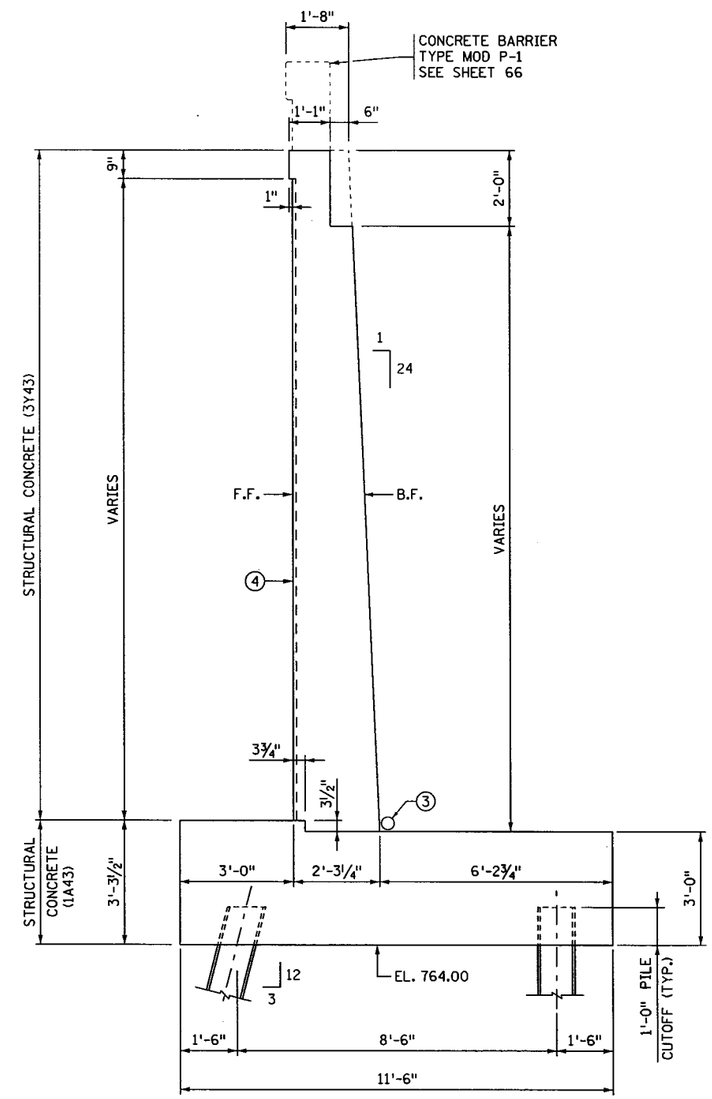

SECTION C-C

(SOUTH WEST WINGWALL)

S.P. NO. 1901-148 (T.H. 13=117), S.P. NO. 019-605-028, S.P. NO. 179-020-031

CERTIFIED BY Todd R. Stevens 7/9/12
LICENSED PROFESSIONAL ENGINEER DATE
NAME: TODD R. STEVENS LIC. NO. 21312

TITLE: SOUTH ABUTMENT DETAILS

DES: GBB	DR: BEP	APPROVED: 7-9-12
CHK: PDG	CHK: TRS	

SHEET NO. 15 OF 91 SHEETS

BRIDGE NO. 19036

TIME : 3:57:26 PM
PLOTTED : 02-JUL-2012
PATH & FILENAME: Bridge/Final_Design/1/19036/Cadd-Plan/19036_south abt
FILENAME: IP_PWP:d1453300V9036_south abt

NOTES:

SEE SHEET 18 FOR LOCATION OF FOOTING DOWELS.

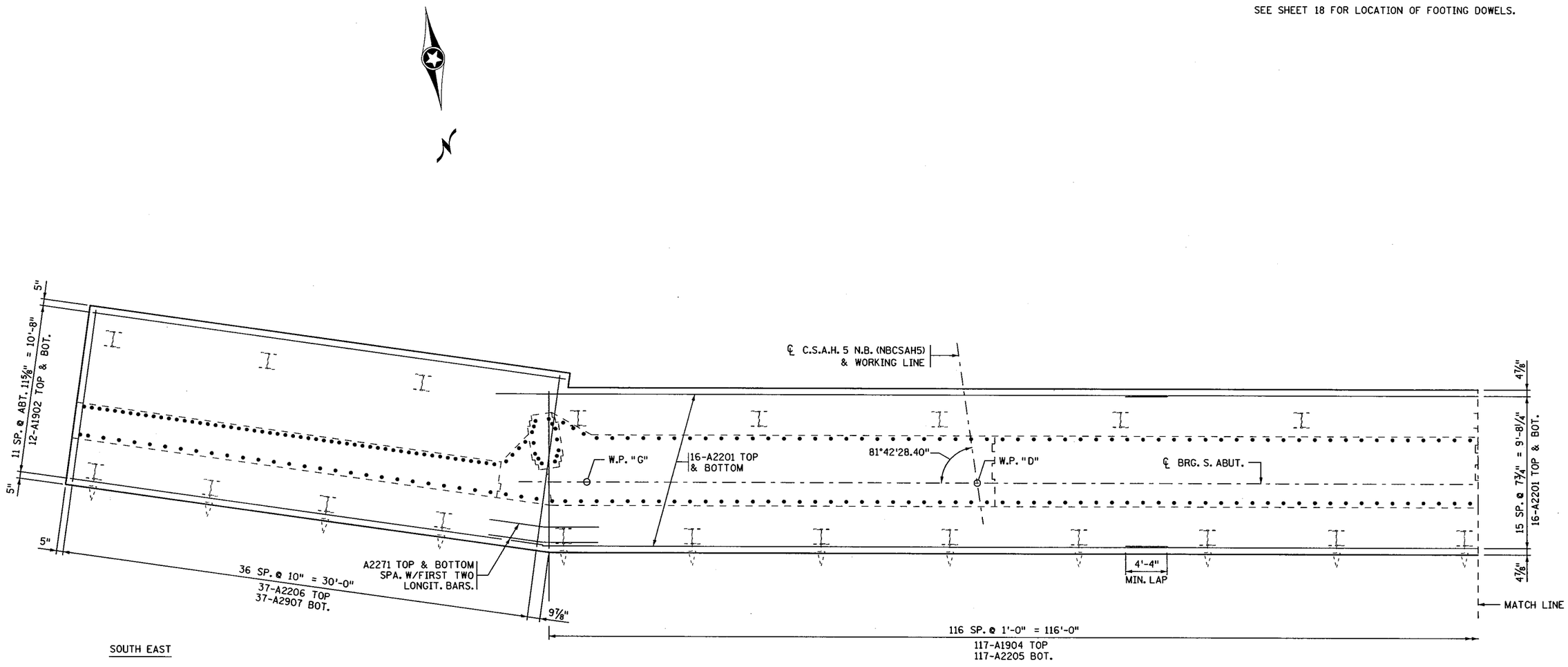

SOUTH EAST

FOOTING REINFORCEMENT PLAN

FILENAME: IP_PWP:d1453300\9036_south abt

TIME : 3:57:40 PM
PLOTTED : 02-JUL-2012
PATH & FILENAME: Bridge/Final_Design/1/19036/Cadd-Plan/19036_south abt

S.P. NO. 1901-148 (T.H. 13=117), S.P. NO. 019-605-028, S.P. NO. 179-020-031

CERTIFIED BY Todd R. Stevens 7/9/12 LICENSED PROFESSIONAL ENGINEER DATE NAME: TODD R. STEVENS LIC. NO. 21312	TITLE: SOUTH ABUTMENT REINFORCEMENT	DES: GBB DR: BEP CHK: PDG CHK: TRS	APPROVED: 7-9-12	BRIDGE NO. 19036
		SHEET NO. 16 OF 91 SHEETS		

NOTES:

SEE SHEET 19 FOR LOCATION OF FOOTING DOWELS.

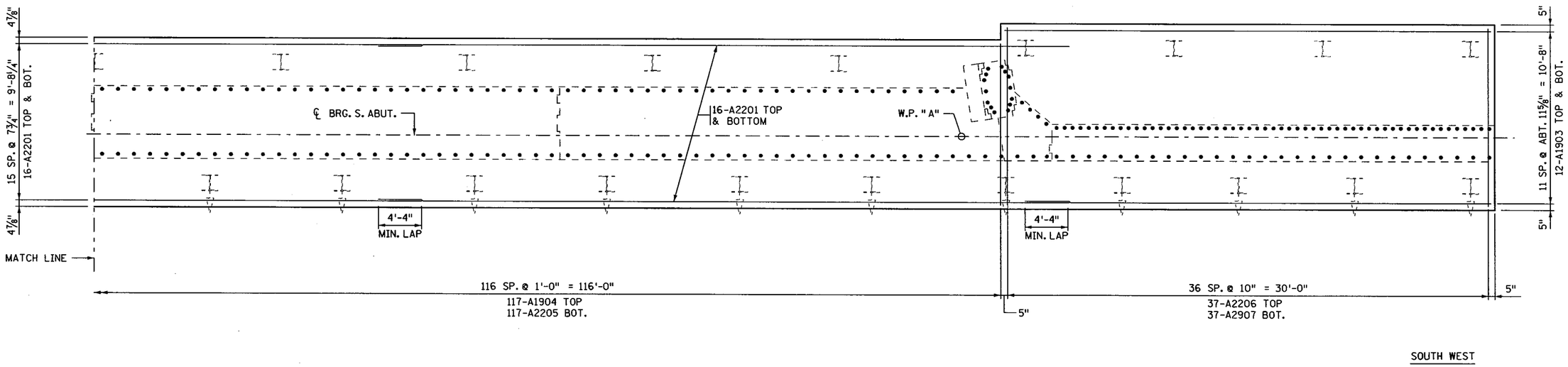

FOOTING REINFORCEMENT PLAN

FILENAME: IP_PWP:d1453300V9036_south abt

TIME : 3:57:53 PM
PLOTTED : 02-JUL-2012
PATH & FILENAME: Bridge/Final_Design/1/19036/Cadd-Plan/19036_south abt

S.P. NO. 1901-148 (T.H. 13=117), S.P. NO. 019-605-028, S.P. NO. 179-020-031

CERTIFIED BY Todd R. Stevens 7/9/12 LICENSED PROFESSIONAL ENGINEER DATE NAME: TODD R. STEVENS LIC. NO. 21312	TITLE: SOUTH ABUTMENT REINFORCEMENT	DES: GBB	DR: BEP	APPROVED: 7-9-12	BRIDGE NO. 19036
		CHK: PDG	CHK: TRS	SHEET NO. 17 OF 91 SHEETS	

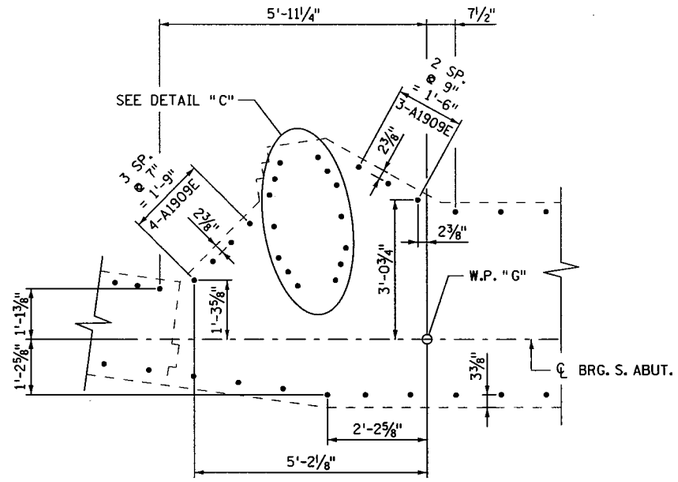

DETAIL "B"

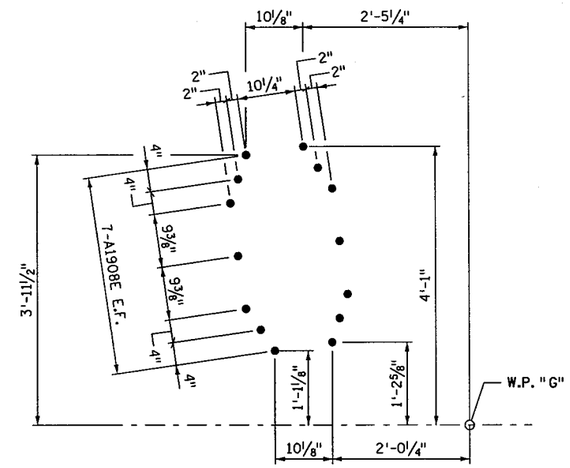

DETAIL "C"

NOTES:

DIMENSIONS SHOWN AT TOP OF FOOTING.
F.F. DENOTES FRONT FACE.
B.F. DENOTES BACK FACE.
E.F. DENOTES EACH FACE.

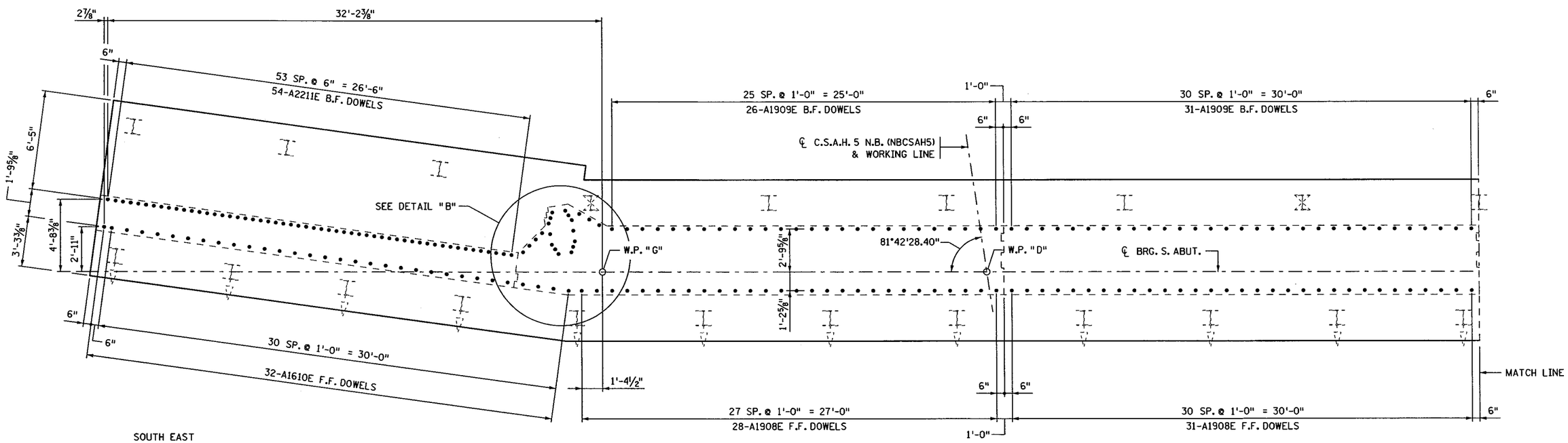

SOUTH EAST

FOOTING DOWEL PLAN

CERTIFIED BY *Todd R. Stevens* 7/9/12 LICENSED PROFESSIONAL ENGINEER DATE NAME: TODD R. STEVENS LIC. NO. 21312	TITLE: SOUTH ABUTMENT REINFORCEMENT	DES: GBB DR: BEP CHK: PDG CHK: TRS	APPROVED: 7-9-12	BRIDGE NO. 19036
S.P. NO. 1901-148 (T.H. 13=117), S.P. NO. 019-605-028, S.P. NO. 179-020-031		SHEET NO. 18 OF 91 SHEETS		

FILENAME: IP_PWP:d1453300V9036_south abt
TIME : 8:43:35 AM
PLOTTED : 09-JUL-2012
PATH & FILENAME: Bridge/Final_Design/1/19036/Cadd-Plan/19036_south abt

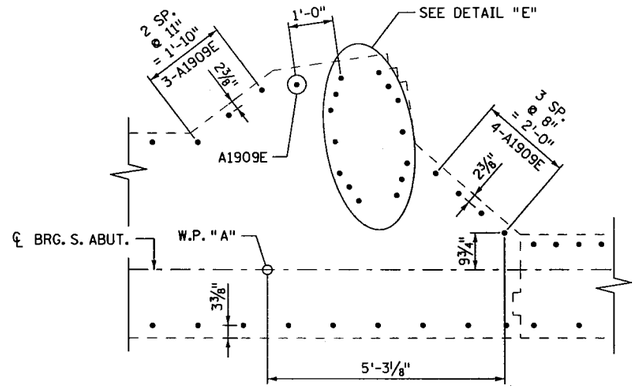

DETAIL "D"

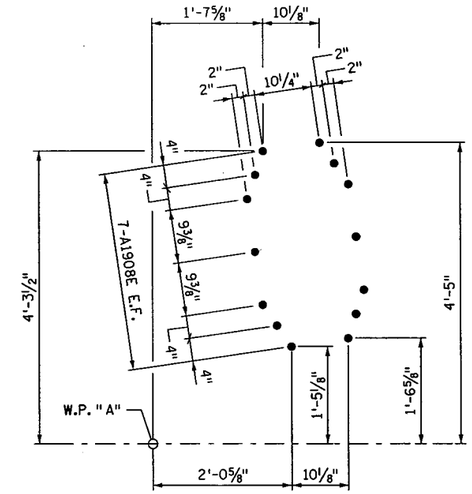

DETAIL "E"

NOTES:

DIMENSIONS SHOWN AT TOP OF FOOTING.
F.F. DENOTES FRONT FACE.
B.F. DENOTES BACK FACE.
E.F. DENOTES EACH FACE.

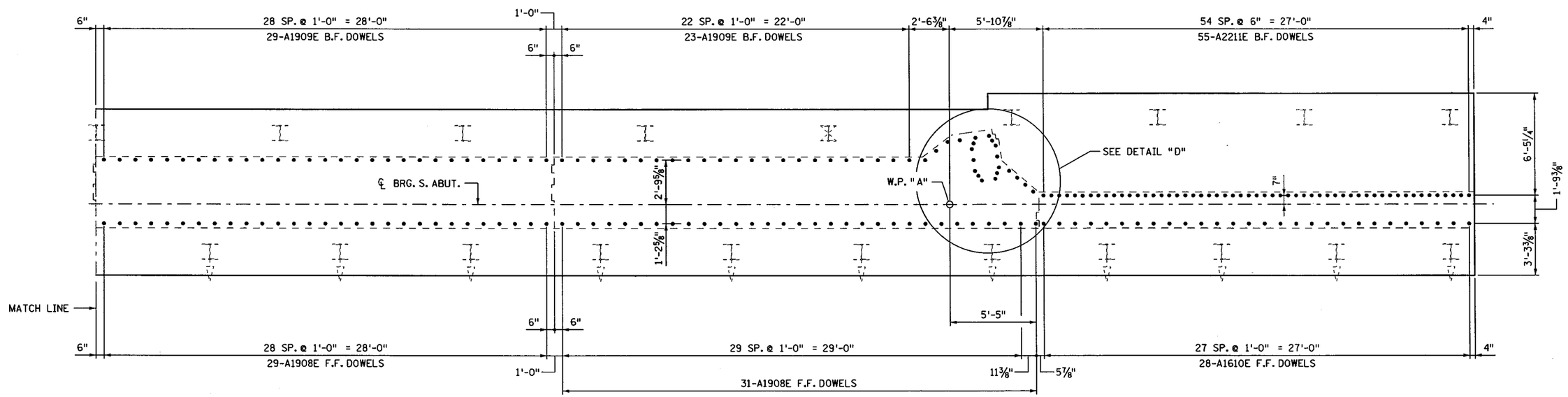

SOUTH WEST

FOOTING DOWEL PLAN

S.P. NO. 1901-148 (T.H. 13=117), S.P. NO. 019-605-028, S.P. NO. 179-020-031

CERTIFIED BY Todd R. Stevens 7/9/12
LICENSED PROFESSIONAL ENGINEER DATE
NAME: TODD R. STEVENS LIC. NO. 21312

TITLE: SOUTH ABUTMENT REINFORCEMENT

DES: GBB	DR: BEP	APPROVED: 7-9-12
CHK: PDG	CHK: TRS	

SHEET NO. 19 OF 91 SHEETS

BRIDGE NO. 19036

FILENAME: IP_PWP-d1453300V9036_south abt
TIME : 8:43:55 AM
PLOTTED : 09-JUL-2012
PATH & FILENAME: Bridge/Final_Design/1/19036/Cadd-Plan/19036_south abt

NOTES:

F.F. DENOTES FRONT FACE.
B.F. DENOTES BACK FACE.
E.F. DENOTES EACH FACE.
FOR SECTIONS M-M & N-N SEE SHEET 25.
FOR SECTIONS R-R, S-S & T-T SEE SHEET 23.
FOR WINGWALL REINFORCEMENT SEE SHEET 21.

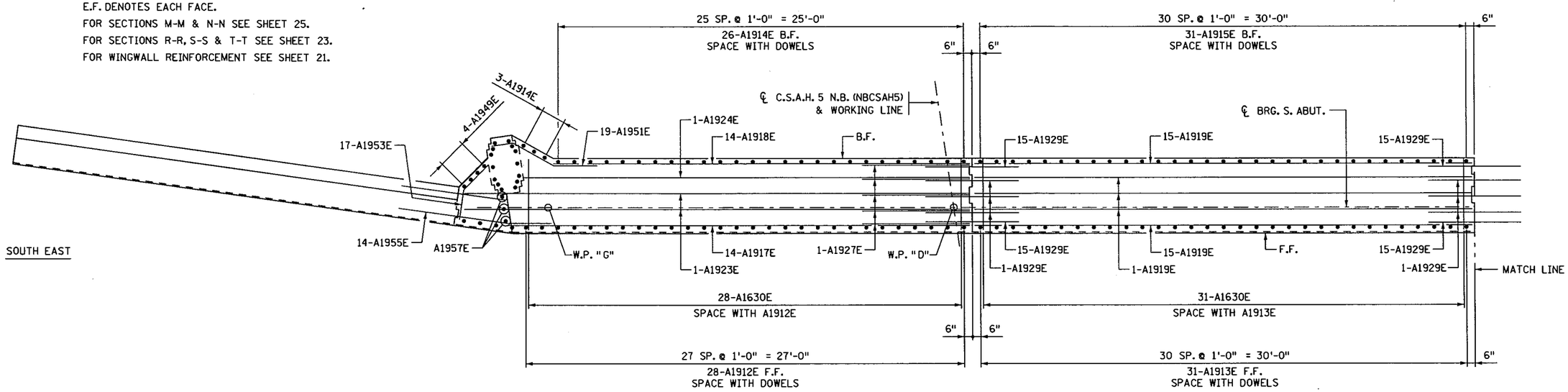

SECTION THRU BRIDGE SEAT

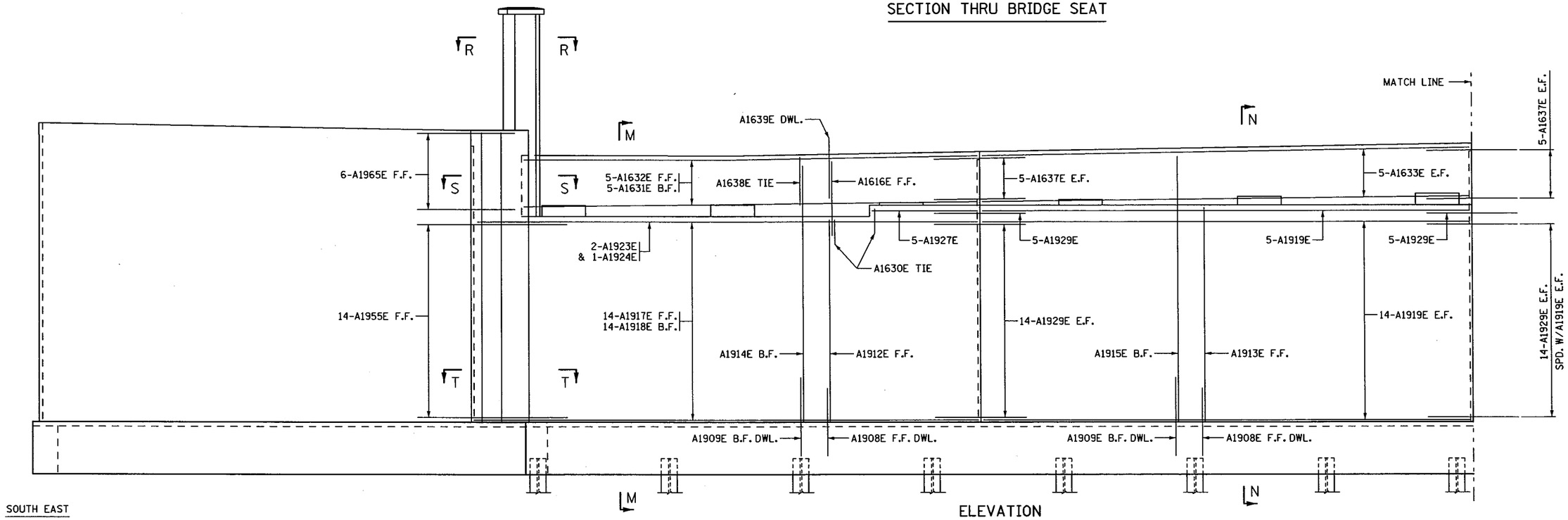

ELEVATION

S.P. NO. 1901-148 (T.H. 13=117), S.P. NO. 019-605-028, S.P. NO. 179-020-031

CERTIFIED BY Todd R. Stevens 7/9/12 LICENSED PROFESSIONAL ENGINEER DATE	TITLE: SOUTH ABUTMENT REINFORCEMENT	DES: GBB	DR: BEP	APPROVED: 7-9-12	BRIDGE NO. 19036
NAME: TODD R. STEVENS LIC. NO. 21312		CHK: PDG	CHK: TRS		
		SHEET NO. 20 OF 91 SHEETS			

FILENAME: IP_PWP:d1453300\19036_south.abt
TIME : 8:46:45 AM
PLOTTED : 09-JUL-2012
PATH & FILENAME: Bridge/Final_Design/1/19036/Cadd-Plan/19036_south.abt

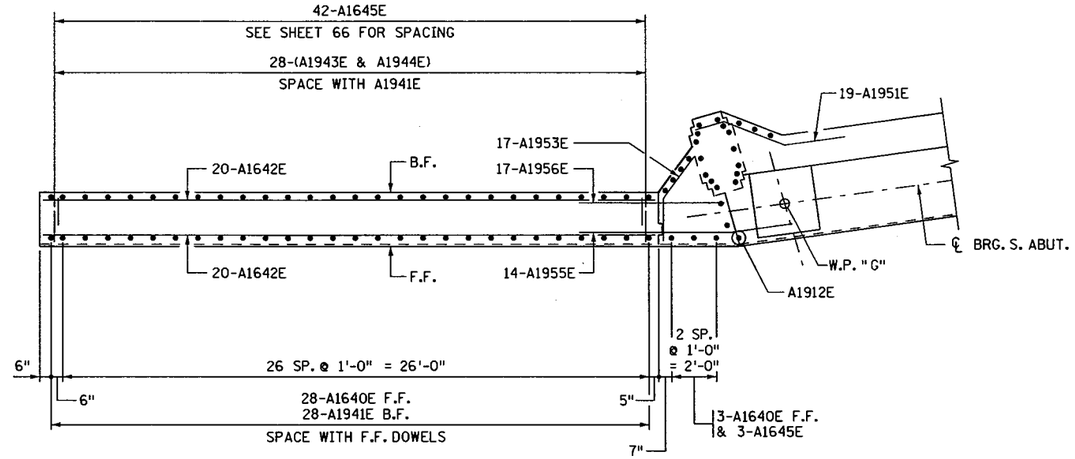

SOUTH EAST WINGWALL PLAN

NOTES:

F.F. DENOTES FRONT FACE.
B.F. DENOTES BACK FACE.
E.F. DENOTES EACH FACE.
FOR SECTION P-P SEE SHEET 26.

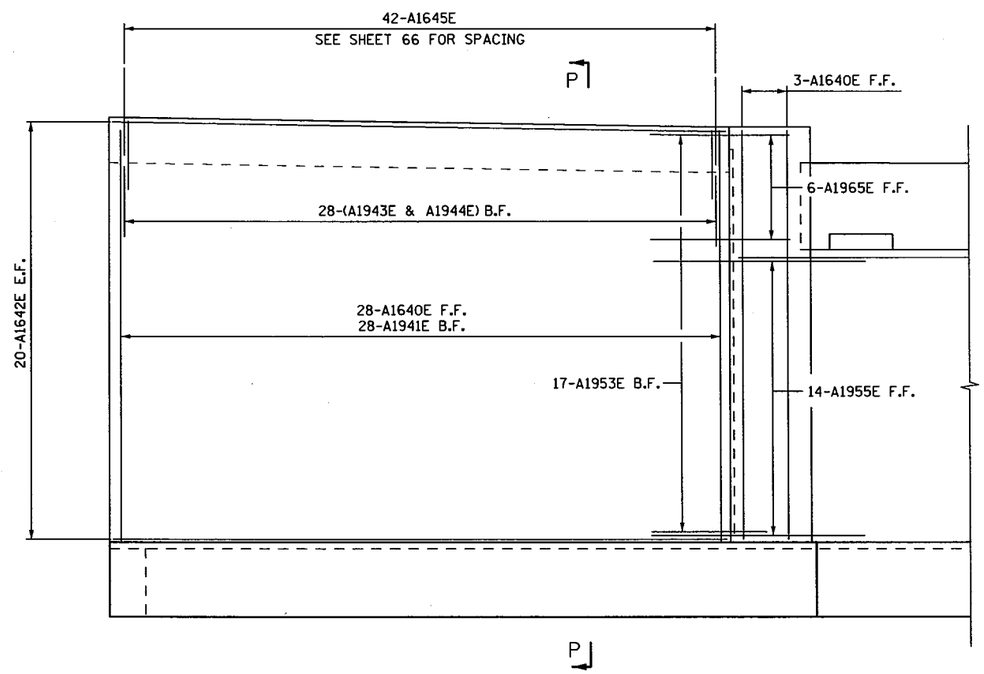

SOUTHEAST WINGWALL ELEVATION

FILENAME: IP_PWP-d1453300\9036_south abt
TIME : 8:53:28 AM
PLOTTED : 09-JUL-2012
PATH & FILENAME: Bridge/Final_Design/1/19036/Cadd-Plan/19036_south abt

S.P. NO. 1901-148 (T.H. 13=117), S.P. NO. 019-605-028, S.P. NO. 179-020-031

CERTIFIED BY Todd R. Stevens 7/9/12
LICENSED PROFESSIONAL ENGINEER DATE
NAME: TODD R. STEVENS LIC. NO. 21312

TITLE: SOUTH ABUTMENT REINFORCEMENT

DES: GBB	DR: BEP	APPROVED: 7-9-12	BRIDGE NO. 19036
CHK: PDG	CHK: TRS		

SHEET NO. 21 OF 91 SHEETS

NOTES:

F.F. DENOTES FRONT FACE.
B.F. DENOTES BACK FACE.
E.F. DENOTES EACH FACE.
FOR SECTIONS M-M & N-N SEE SHEET 25.
FOR SECTION Q-Q SEE SHEET 26.
FOR SECTIONS U-U, V-V & W-W SEE SHEET 24.

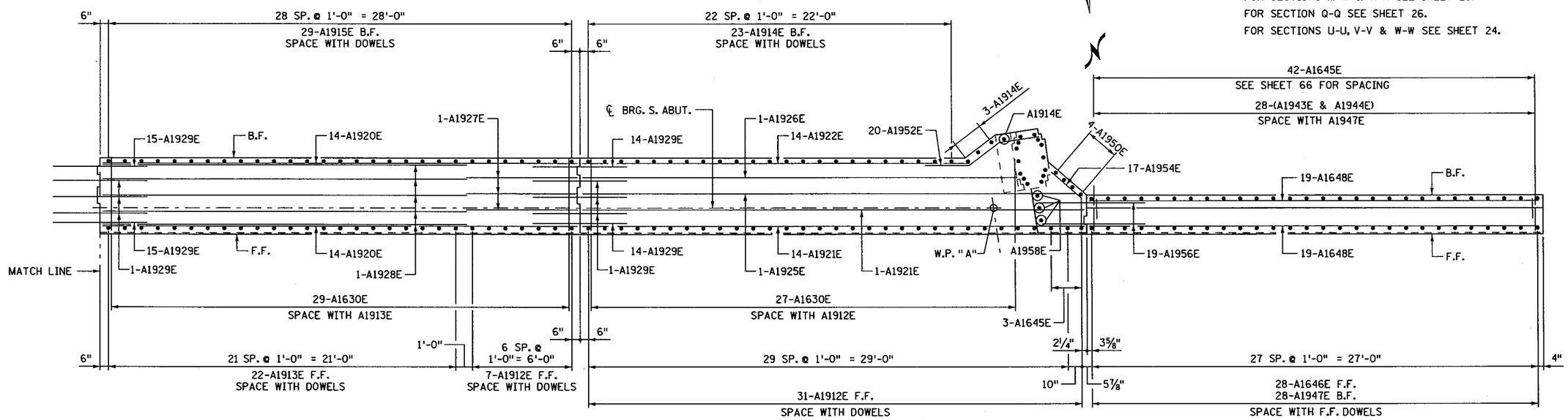

SOUTH WEST

SECTION THRU BRIDGE SEAT

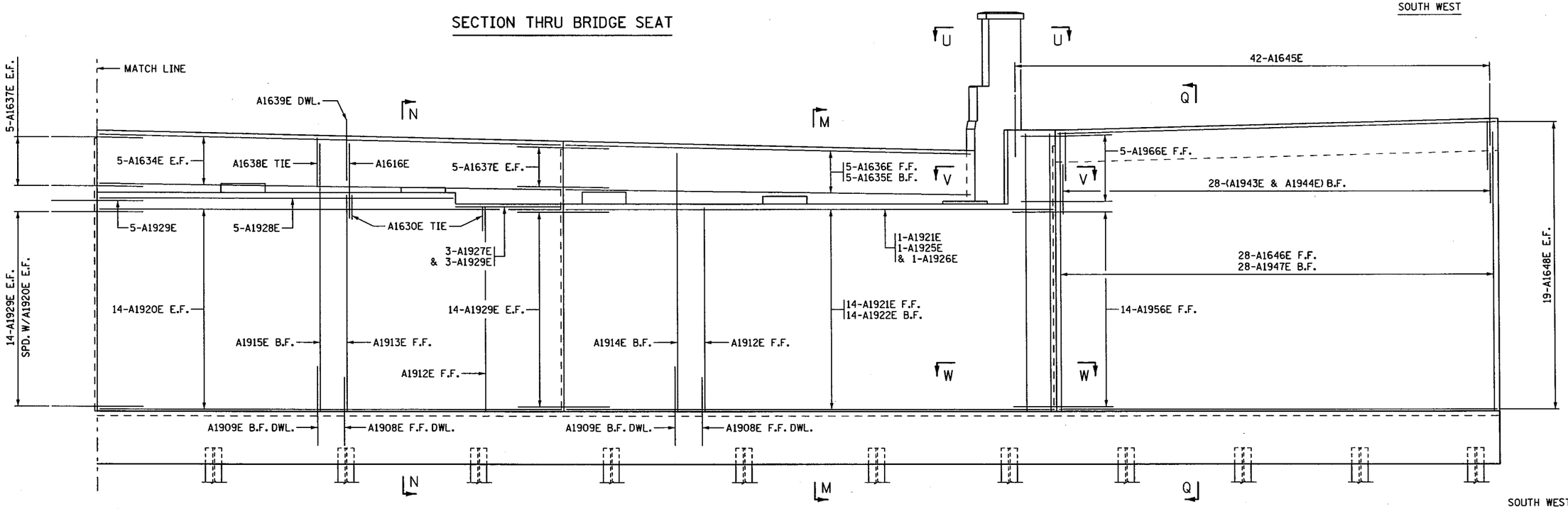

SOUTH WEST

ELEVATION

CERTIFIED BY *Todd R. Stevens* 7/9/12 (LICENSED PROFESSIONAL ENGINEER, DATE) NAME: TODD R. STEVENS LIC. NO. 21312	TITLE: SOUTH ABUTMENT REINFORCEMENT	DES: GBB DR: BEP CHK: PDG CHK: TRS	APPROVED: 7-9-12	BRIDGE NO. 19036
S.P. NO. 1901-148 (T.H. 13=117), S.P. NO. 019-605-028, S.P. NO. 179-020-031		SHEET NO. 22 OF 91 SHEETS		

FILENAME: IP_PWP-d1453300V9036_south abt
TIME : 9:28:01 AM
PLOTTED : 09-JUL-2012
PATH & FILENAME: Bridge/Final_Design/1/19036/Cadd-Plan/19036_south abt

NOTES:

F.F. DENOTES FRONT FACE.
B.F. DENOTES BACK FACE.
E.F. DENOTES EACH FACE.
SEE SHEET 20 FOR LOCATION OF SECTIONS R-R, S-S & T-T.
SEE SHEET 25 FOR SECTION Y-Y.

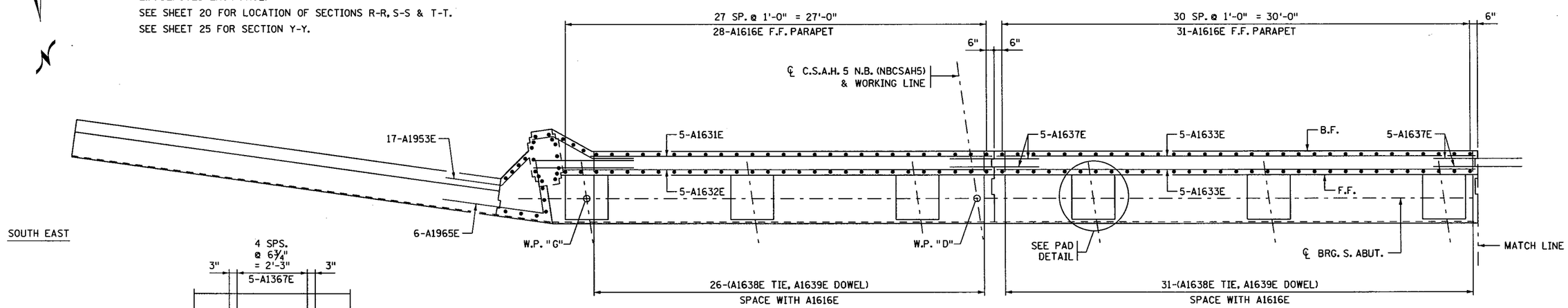

SECTION THRU PARAPET

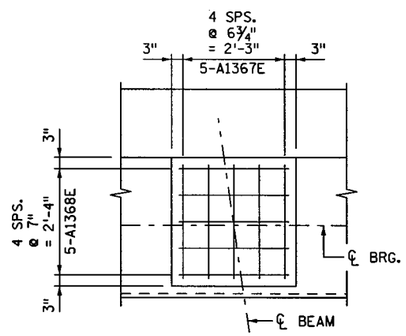

PAD DETAIL

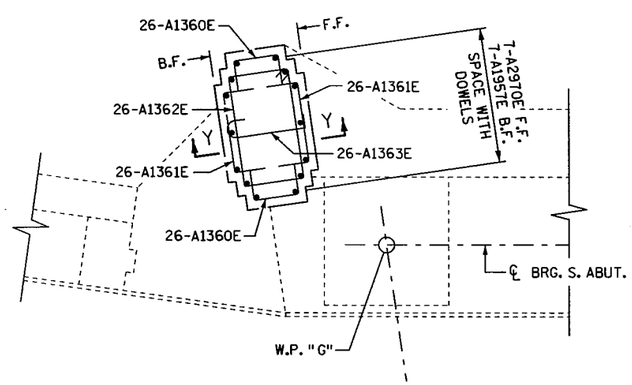

SECTION R-R

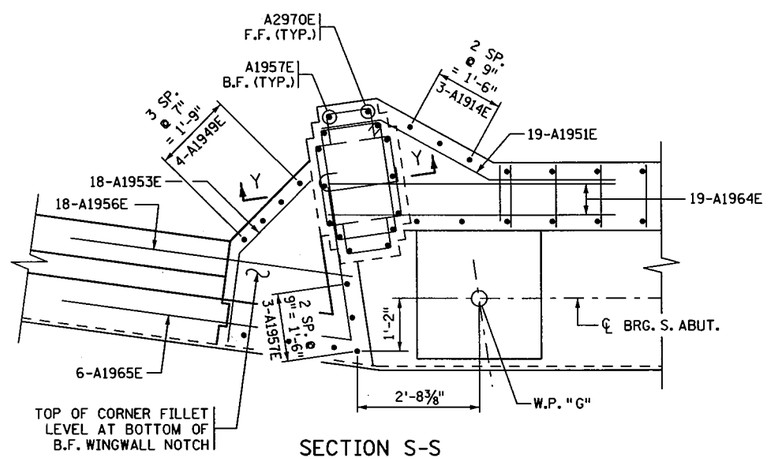

SECTION S-S

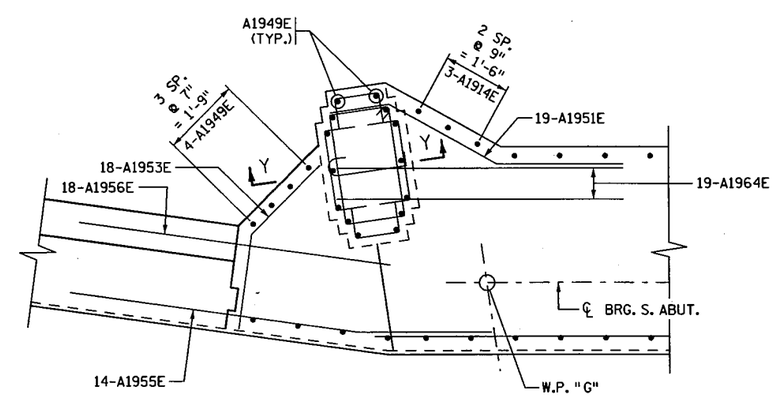

SECTION T-T

CERTIFIED BY Todd R. Stevens 7/9/12 LICENSED PROFESSIONAL ENGINEER DATE NAME: TODD R. STEVENS LIC. NO. 21312	TITLE: SOUTH ABUTMENT REINFORCEMENT	DES: GBB DR: BEP CHK: PDG CHK: TRS	APPROVED: 7-9-12	SHEET NO. 23 OF 91 SHEETS	BRIDGE NO. 19036

S.P. NO. 1901-148 (T.H. 13=117), S.P. NO. 019-605-028, S.P. NO. 179-020-031

TIME : 9:34:24 AM
PLOTTED : 09-JUL-2012
PATH & FILENAME: Bridge/Final_Design/1/19036/Cadd-Plan/19036_south abt
FILENAME: IP_PWP:d1453300V9036_south abt

NOTES:

F.F. DENOTES FRONT FACE.
B.F. DENOTES BACK FACE.
E.F. DENOTES EACH FACE.
SEE SHEET 22 FOR LOCATION OF SECTIONS U-U, V-V & W-W.
SEE SHEET 26 FOR SECTION Z-Z.

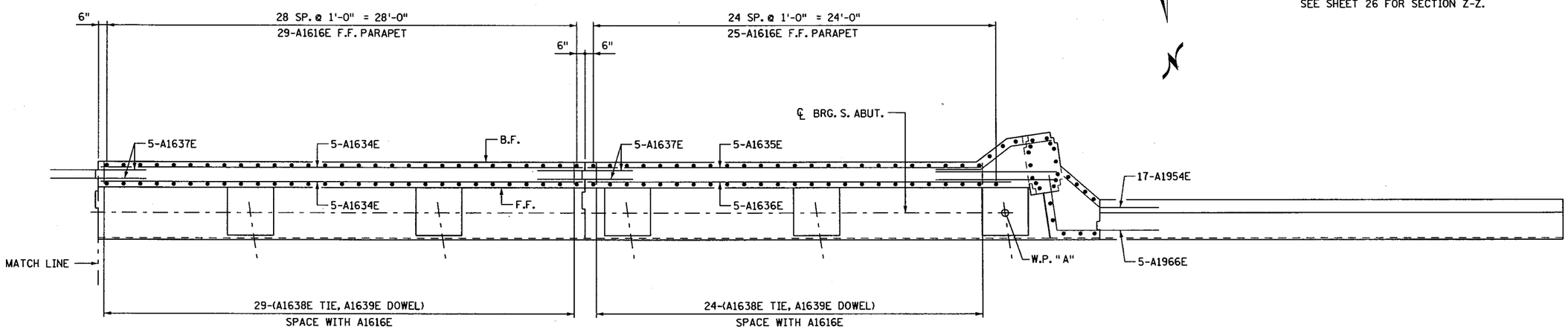

SOUTH WEST

SECTION THRU PARAPET

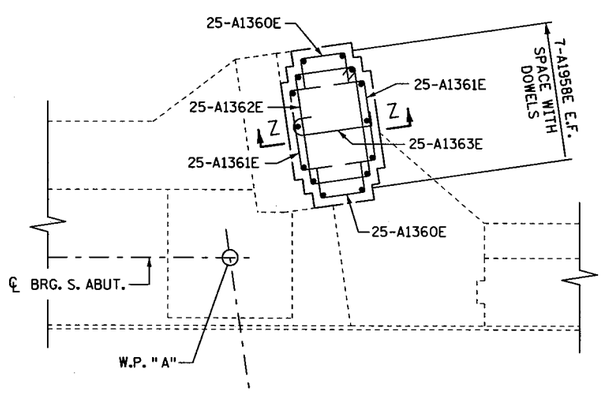

SECTION U-U

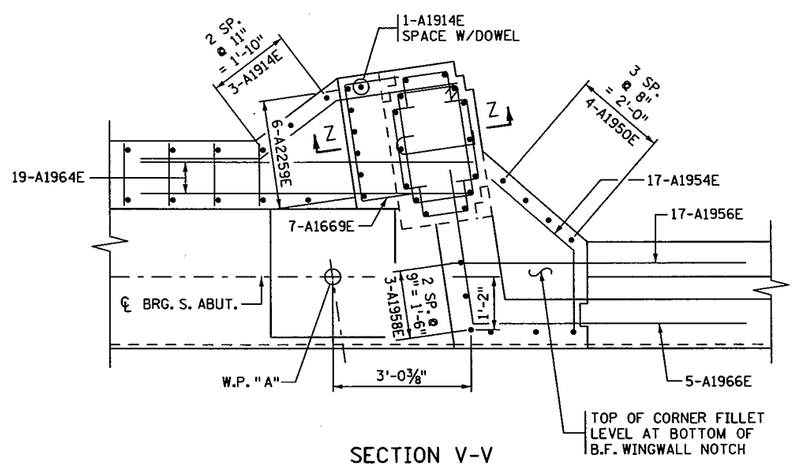

SECTION V-V

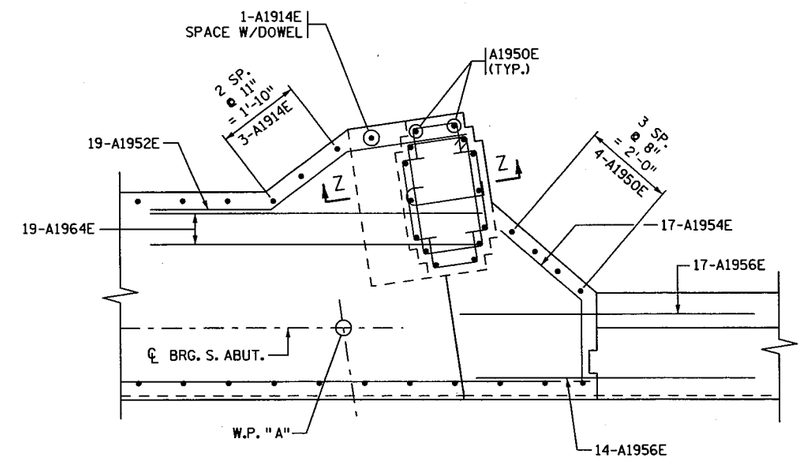

SECTION W-W

S.P. NO. 1901-148 (T.H. 13=117), S.P. NO. 019-605-028, S.P. NO. 179-020-031

CERTIFIED BY Todd R. Stevens 7/9/12
LICENSED PROFESSIONAL ENGINEER DATE
NAME: TODD R. STEVENS LIC. NO. 21312

TITLE: SOUTH ABUTMENT REINFORCEMENT

DES: GBB	DR: BEP	APPROVED: 7-9-12
CHK: PDG	CHK: TRS	

SHEET NO. 24 OF 91 SHEETS

BRIDGE NO. 19036

FILENAME: IP_PWP:d1453300V9036_south abt
TIME : 9:40:37 AM
PLOTTED : 09-JUL-2012
PATH & FILENAME: Bridge/Final_Design/1/19036/Cadd-Plan/19036_south abt

NOTES:

F.F. DENOTES FRONT FACE.

B.F. DENOTES BACK FACE.

SEE SHEET 20 & 22 FOR LOCATION OF SECTIONS M-M & N-N.

SEE SHEET 23 FOR SECTIONS R-R, S-S & T-T.

(1) PULL UP TO 2" CLR.

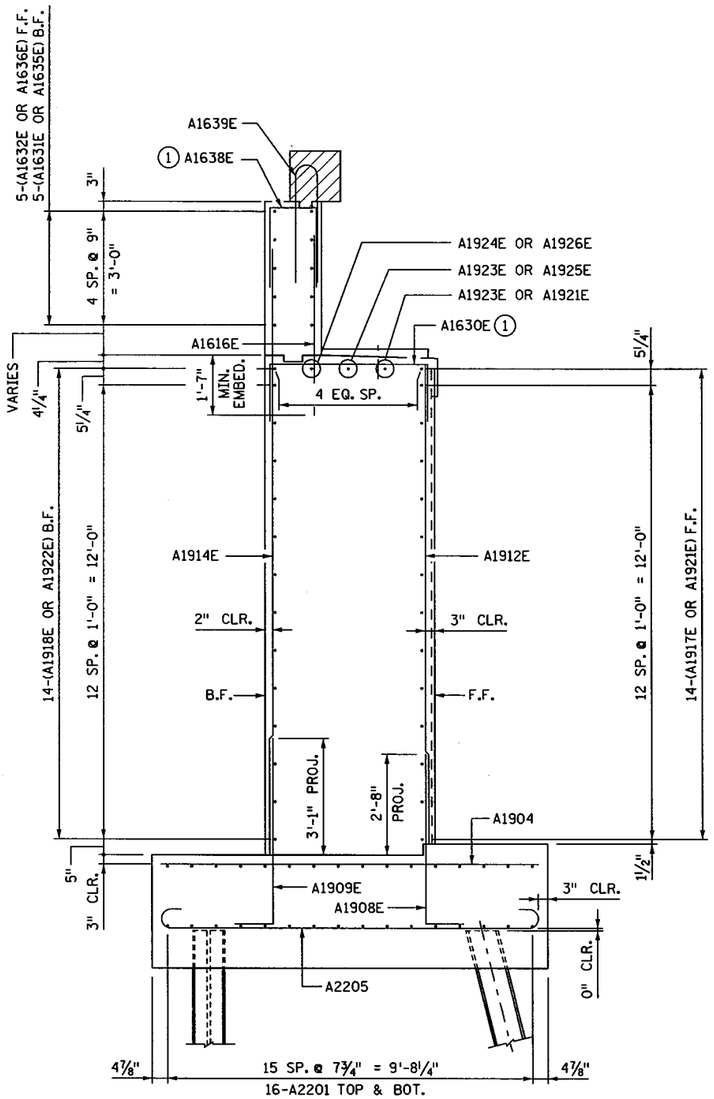

SECTION M-M

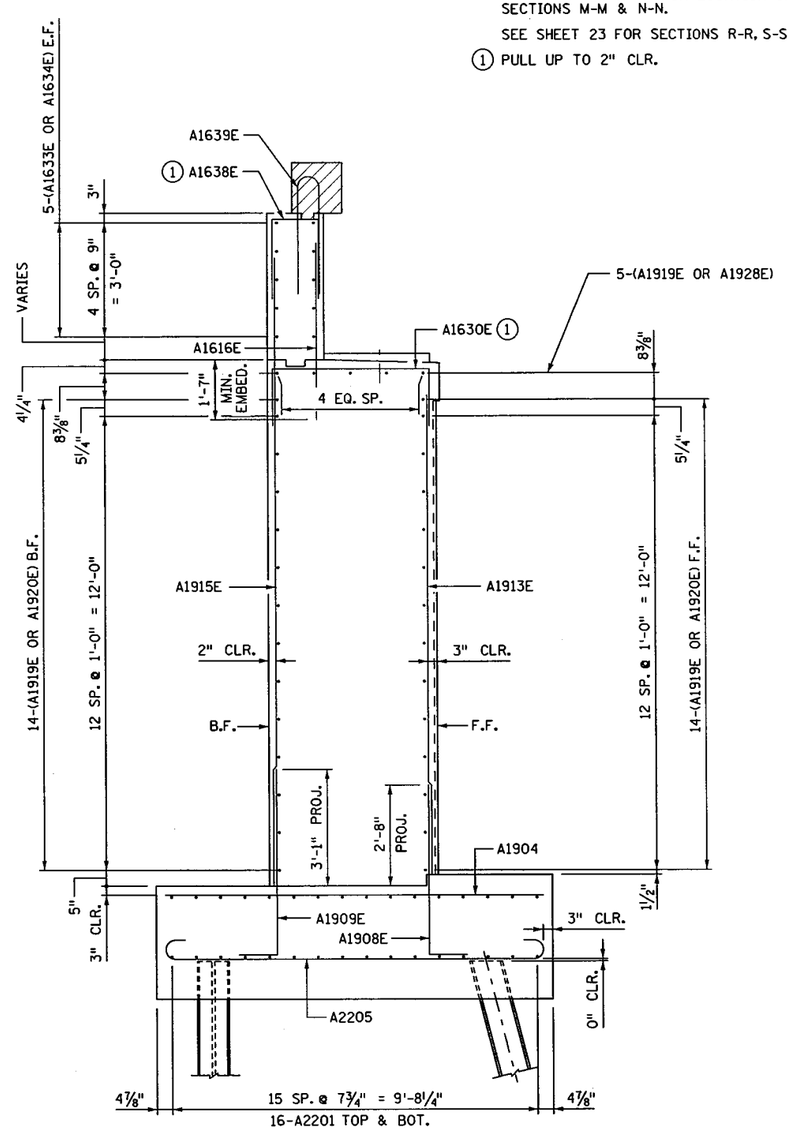

SECTION N-N

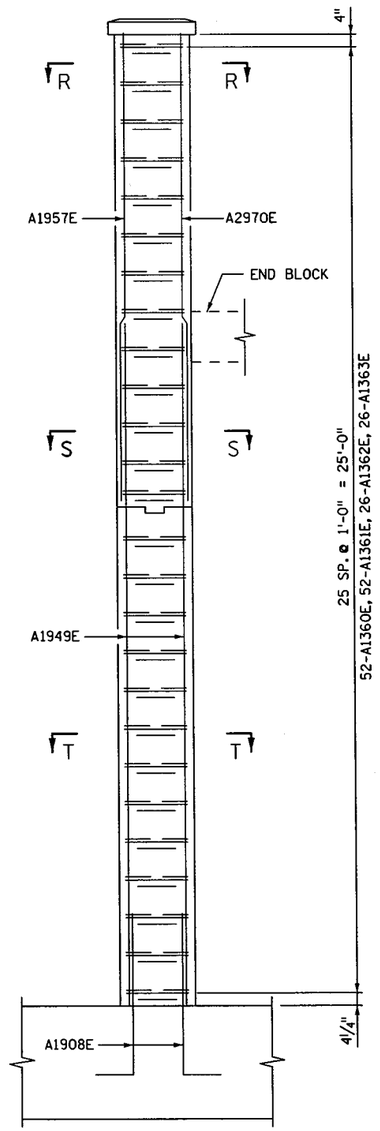

SECTION Y-Y

(SOUTH EAST CORNER)

S.P. NO. 1901-148 (T.H. 13=117), S.P. NO. 019-605-028, S.P. NO. 179-020-031

CERTIFIED BY Todd R. Stevens 7/9/12
LICENSED PROFESSIONAL ENGINEER DATE
NAME: TODD R. STEVENS LIC. NO. 21312

TITLE: SOUTH ABUTMENT REINFORCEMENT

DES: GBB	DR: BEP	APPROVED: 7-9-12
CHK: PDG	CHK: TRS	

SHEET NO. 25 OF 91 SHEETS

BRIDGE NO. 19036

TIME : 10:07:23 AM
PLOTTED : 09-JUL-2012
PATH & FILENAME: Bridge/Final_Design/1/19036/Cadd-Plan/19036_south.dgn
FILENAME: IP_PWP:d1453300\9036_south.dgn

NOTES:

F.F. DENOTES FRONT FACE.
B.F. DENOTES BACK FACE.
SEE SHEET 22 FOR LOCATION OF SECTION Q-Q.
SEE SHEET 21 FOR LOCATION OF SECTION P-P.
SEE SHEET 24 FOR SECTIONS U-U, V-V & W-W.

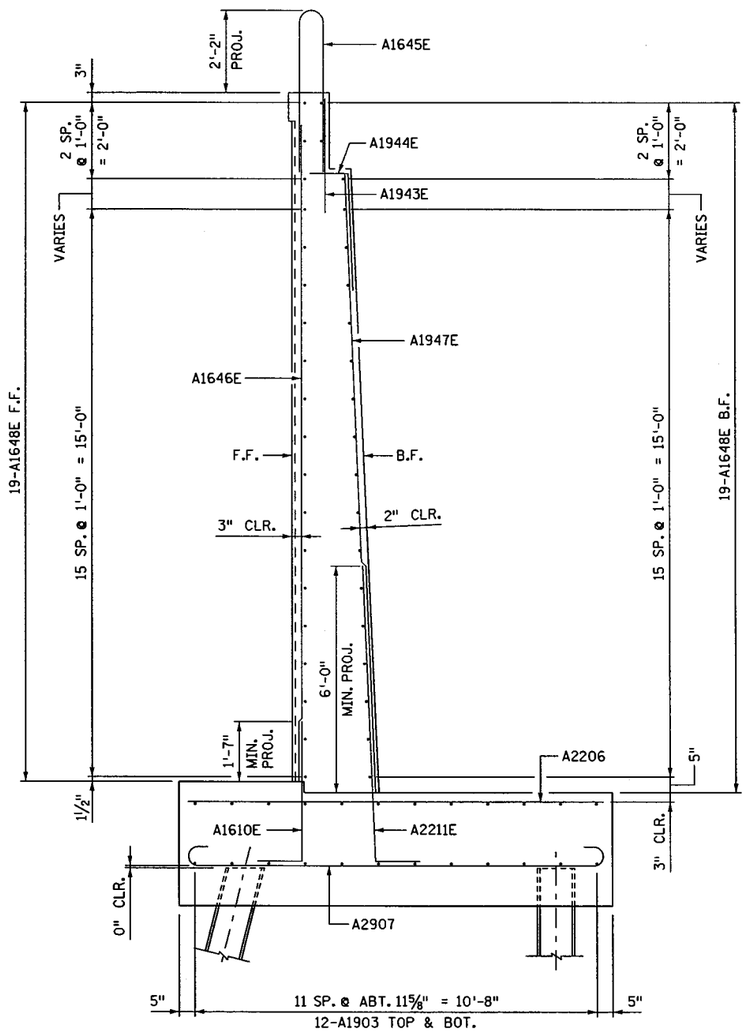

SECTION Q-Q
(SOUTH WEST WINGWALL)

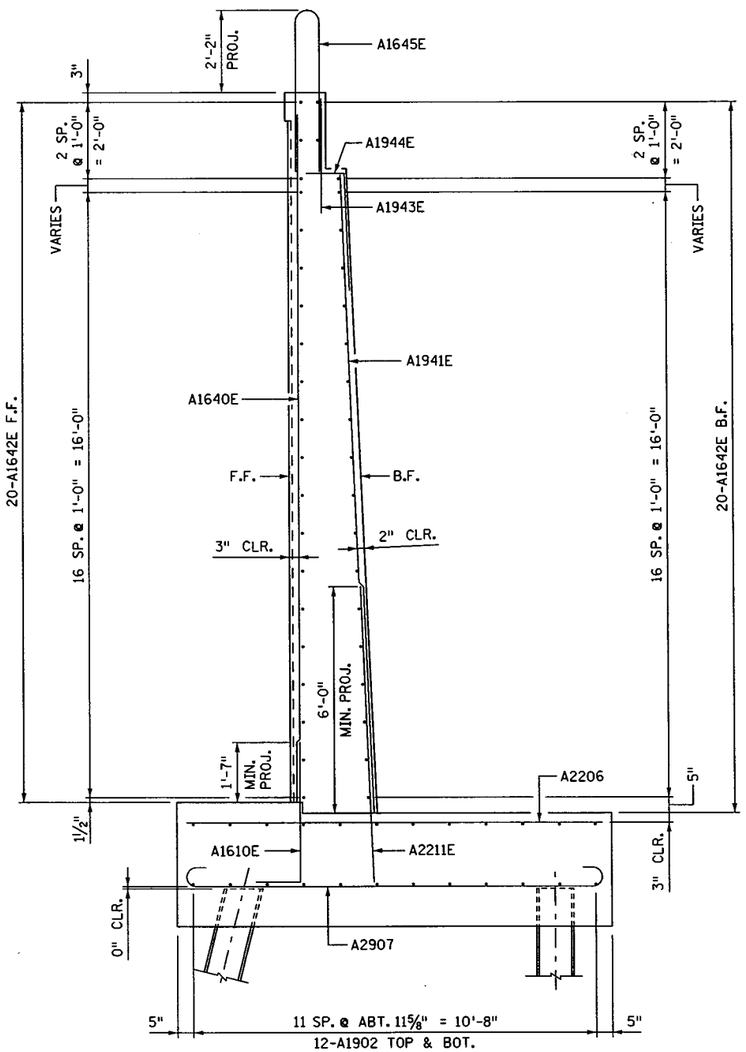

SECTION P-P
(SOUTH EAST WINGWALL)

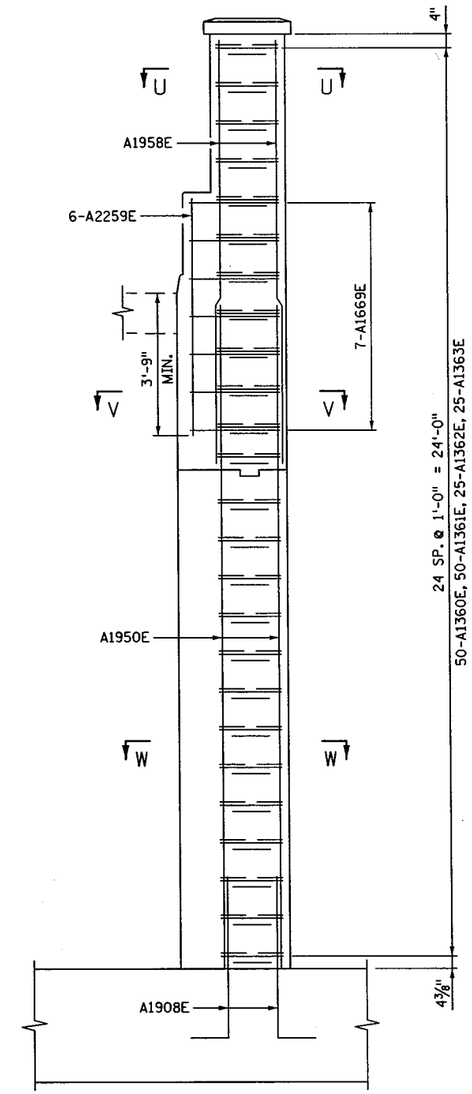

SECTION Z-Z
(SOUTH WEST CORNER)

TIME : 10:09:37 AM
PLOTTED : 09-JUL-2012
PATH & FILENAME: Bridge/Final_Design/1/19036/Cadd-Plan/19036_south.dgn
FILENAME: IP_PWP-d1453300\90036_south.dgn

S.P. NO. 1901-148 (T.H. 13=117), S.P. NO. 019-605-028, S.P. NO. 179-020-031

CERTIFIED BY Todd R. Stevens 7/9/12
LICENSED PROFESSIONAL ENGINEER DATE
NAME: TODD R. STEVENS LIC. NO. 21312

TITLE: SOUTH ABUTMENT REINFORCEMENT

DES: GBB	DR: BEP	APPROVED: 7-9-12
CHK: PDG	CHK: TRS	

SHEET NO. 26 OF 91 SHEETS

BRIDGE NO. 19036

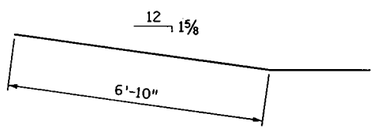

A1955E

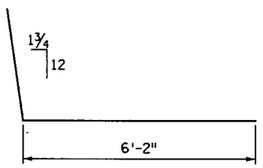

A1966E

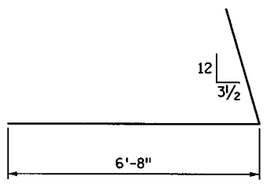

A1965E

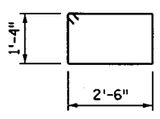

A1362E

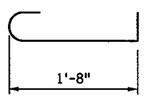

A1363E

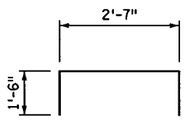

A1669E

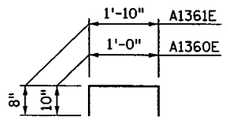

A1360E & A1361E

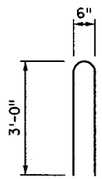

A1639E

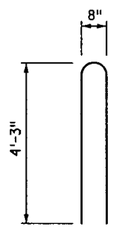

A1645E

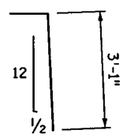

A1944E

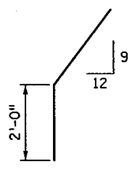

A1953E

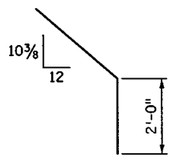

A1954E

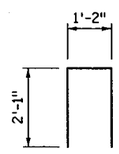

A1638E

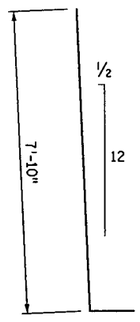

A2211E

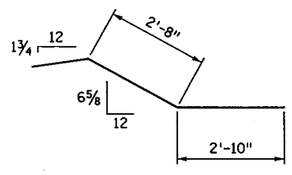

A1951E

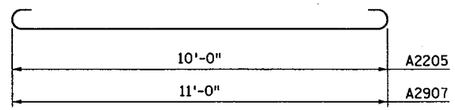

A2205 & A2907

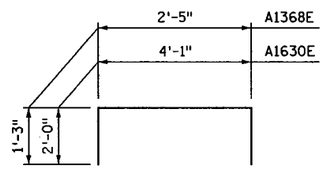

A1630E & A1368E

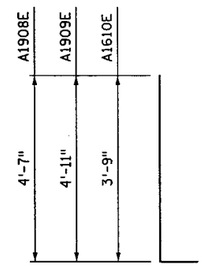

A1908E, A1909E, A1610E

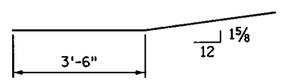

A2271

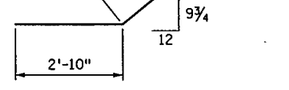

A1952E

BILL OF REINFORCEMENT FOR SOUTH ABUTMENT

BAR	NO.	LENGTH	SHAPE	LOCATION
A2201	96	44'-0"		FOOTING LONGITUDINAL T&B
A1902	24	30'-6"		FOOTING LONGITUDINAL T&B
A1903	24	30'-4"		FOOTING LONGITUDINAL T&B
A1904	117	10'-0"		FOOTING TRANSVERSE TOP
A2205	117	11'-8"		FOOTING TRANSVERSE BOT.
A2206	74	11'-0"		FOOTING TRANSVERSE TOP
A2907	74	13'-6"		FOOTING TRANSVERSE BOT.
A1908E	147	5'-7"		FOOTING DOWEL F.F.
A1909E	124	5'-11"		FOOTING DOWEL B.F.
A1610E	60	4'-7"		WINGWALL FOOTING DOWEL F.F.
A2211E	99	9'-0"		WINGWALL FOOTING DWL. B.F.
A1912E	66	12'-7"		BRIDGE SEAT VERTICAL F.F.
A1913E	53	13'-4"		BRIDGE SEAT VERTICAL F.F.
A1914E	56	16'-0"		BRIDGE SEAT VERTICAL B.F.
A1915E	60	16'-7"		BRIDGE SEAT VERTICAL B.F.
A1616E	113	5'-0"		PARAPET VERTICAL F.F.
A1917E	14	28'-5"		BRIDGE SEAT HORIZONTAL
A1918E	14	25'-8"		BRIDGE SEAT HORIZONTAL
A1919E	33	30'-8"		BRIDGE SEAT HORIZONTAL
A1920E	28	28'-8"		BRIDGE SEAT HORIZONTAL
A1921E	15	30'-2"		BRIDGE SEAT HORIZONTAL
A1922E	14	23'-0"		BRIDGE SEAT HORIZONTAL
A1923E	2	31'-4"		BRIDGE SEAT HORIZONTAL
A1924E	1	27'-6"		BRIDGE SEAT HORIZONTAL
A1925E	1	29'-8"		BRIDGE SEAT HORIZONTAL
A1926E	1	26'-0"		BRIDGE SEAT HORIZONTAL
A1927E	8	6'-10"		BRIDGE SEAT HORIZONTAL
A1928E	5	21'-11"		BRIDGE SEAT HORIZONTAL
A1929E	97	5'-8"		BRIDGE SEAT CONST. JT. DWL.
A1630E	115	8'-1"		BRIDGE SEAT TIE
A1631E	5	25'-8"		PARAPET HORIZONTAL
A1632E	5	27'-6"		PARAPET HORIZONTAL
A1633E	10	30'-8"		PARAPET HORIZONTAL
A1634E	10	28'-8"		PARAPET HORIZONTAL
A1635E	5	23'-0"		PARAPET HORIZONTAL
A1636E	5	26'-0"		PARAPET HORIZONTAL
A1637E	30	5'-8"		PARAPET CONST. JT. DWL.
A1638E	110	5'-4"		PARAPET TIE
A1639E	110	6'-3"		END BLOCK TIE
A1640E	31	17'-10"		EAST WINGWALL VERTICAL F.F.
A1941E	28	15'-10"		EAST WINGWALL VERTICAL B.F.
A1642E	40	27'-1"		EAST WINGWALL HORIZONTAL
A1943E	56	3'-0"		WINGWALL TIE
A1944E	56	4'-1"		WINGWALL TIE
A1645E	84	8'-11"		WINGWALL BARRIER TIE
A1646E	28	17'-3"		WEST WINGWALL VERTICAL F.F.
A1947E	28	15'-3"		WEST WINGWALL VERTICAL B.F.
A1648E	38	27'-3"		WEST WINGWALL HORIZONTAL
A1949E	18	15'-10"		VERTICAL S.E. CORNER FILLET
A1950E	18	15'-3"		VERTICAL S.W. CORNER FILLET
A1951E	19	7'-0"		PILASTER CORNER TIE
A1952E	19	7'-7"		PILASTER CORNER TIE
A1953E	18	4'-6"		WINGWALL CORNER TIE
A1954E	17	4'-10"		WINGWALL CORNER TIE
A1955E	14	9'-6"		WINGWALL CORNER TIE
A1956E	49	6'-2"		WINGWALL CONST. JT. DWL.
A1957E	10	12'-3"		S.E. PILASTER VERTICAL
A1958E	17	11'-3"		S.W. PILASTER VERTICAL
A2259E	6	6'-3"		S.W. PILASTER VERTICAL
A1360E	102	2'-8"		PILASTER TIE
A1361E	102	3'-2"		PILASTER TIE
A1362E	51	8'-5"		PILASTER TIE
A1363E	51	2'-5"		PILASTER TIE
A1964E	76	7'-2"		PILASTER TIE
A1965E	6	10'-2"		FILLET CORNER TIE
A1966E	5	9'-6"		FILLET CORNER TIE
A1367E	55	2'-6"		PEDESTAL HORIZONTAL
A1368E	55	4'-11"		PEDESTAL TIE
A1669E	7	5'-7"		PILASTER TIE
A2970E	7	12'-3"		S.E. PILASTER VERTICAL
A2271	4	7'-0"		FOOTING TIE

S.P. NO. 1901-148 (T.H. 13=117), S.P. NO. 019-605-028, S.P. NO. 179-020-031

CERTIFIED BY Todd R. Stevens 7/9/12
LICENSED PROFESSIONAL ENGINEER DATE
NAME: TODD R. STEVENS LIC. NO. 21312

TITLE: SOUTH ABUTMENT REINFORCEMENT

DES: GBB DR: BEP APPROVED: 7-9-12
CHK: PDG CHK: TRS

SHEET NO. 27 OF 91 SHEETS

BRIDGE NO. 19036

FILENAME: IP_PWP:d1453300v9036_south.obt
TIME : 10:15:33 AM
PLOTTED : 09-JUL-2012
PATH & FILENAME: Bridge/Final_Design/1/19036/Cadd-Plan/19036_south.obt

NORTH ABUTMENT COMPUTED PILE LOAD - TONS/PILE	
FACTORED DEAD LOAD + EARTH PRESSURE	112.7
FACTORED LIVE LOAD	21.2
✳ FACTORED DESIGN LOAD	133.9

✳ BASED ON STRENGTH I LOAD COMBINATION

NORTH ABUTMENT REQUIRED NOMINAL PILE BEARING RESISTANCE R_n - TONS/PILE		
FIELD CONTROL METHOD	φ_{dyn}	✳ R_n
MN/DOT NOMINAL RESISTANCE FORMULA	0.40	334.8
PDA	0.65	206.0

✳ R_n = (FACTORED DESIGN LOAD) / φ_{dyn}

NORTH ABUTMENT PILE NOTES

3 STEEL H TEST PILES 55 FT. LONG
36 STEEL H PILES EST. LENGTH 45 FT.
39 STEEL H PILES REQ'D FOR NORTH ABUTMENT.

PILE SPACING SHOWN IS AT BOTTOM OF FOOTING.

PILES MARKED THUS H← TO BE BATTERED 3" PER FOOT IN DIRECTION SHOWN.

PILES TO BE HP 12 X 53

FOR PILE SPLICE DETAILS SEE DETAIL B202.

SUMMARY OF QUANTITIES FOR NORTH ABUTMENT		
STRUCTURAL CONCRETE (1A43)	210	CU. YD.
STRUCTURAL CONCRETE (3Y43)	334	CU. YD.
REINFORCEMENT BARS	18940	POUND
REINFORCEMENT BARS (EPOXY COATED)	25600	POUND
(1) STEEL H-PILING DELIVERED 12"	1620	LIN. FT.
(1) STEEL H-PILING DRIVEN 12"	1620	LIN. FT.
STEEL H-TEST PILE 55 FT. LONG 12"	3	EACH
PRECAST CONCRETE CAP	2	EACH
ARCHITECTURAL CONCRETE TEXTURE (RANDOM BATTEN)	1610	SQ. FT.
ARCHITECTURAL SURFACE FINISH (SINGLE COLOR)	1610	SQ. FT.
(2) MEMBRANE WATERPROOFING SYSTEM	200	LIN. FT.

(1) DOES NOT INCLUDE TEST PILES.

(2) MEMBRANE WATERPROOFING SYSTEM PER MnDOT 2481.3B. INCIDENTAL TO "STRUCTURAL CONCRETE (3Y43)".

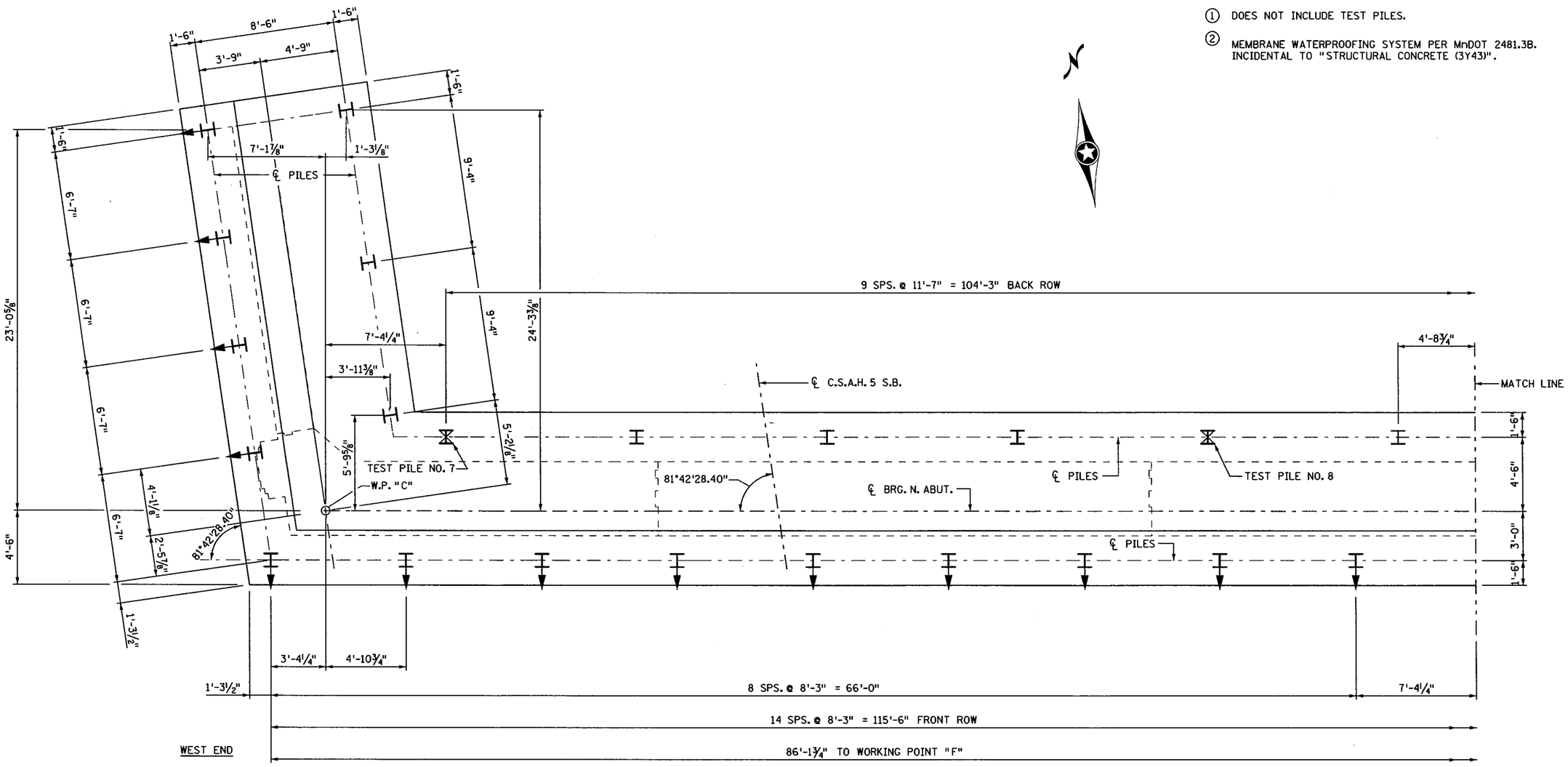

PILE LAYOUT

FILENAME: IP_PWP:d1453300\br19036_abt.dgn
TIME : 12:03:11 PM
PLOTTED : 09-JUL-2012
PATH & FILENAME: Bridge/Final_Design/1/19036/Cadd-Plan/br19036_abt.dgn

S.P. NO. 1901-148 (T.H. 13=117), S.P. NO. 019-605-028, S.P. NO. 179-020-031

CERTIFIED BY Todd R. Stevens 7/9/12
LICENSED PROFESSIONAL ENGINEER DATE
NAME: TODD R. STEVENS LIC. NO. 21312

TITLE: NORTH ABUTMENT DETAILS

DES: GBB	DR: RLV	APPROVED: 7-9-12
CHK: PDG	CHK: TRS	

SHEET NO. 28 OF 91 SHEETS

BRIDGE NO. 19036

NORTH ABUTMENT PILE NOTES

PILE SPACING SHOWN IS AT BOTTOM OF FOOTING.

PILES MARKED THUS H— TO BE BATTERED 3" PER FOOT IN DIRECTION SHOWN.

PILES TO BE HP 12 X 53

FOR PILE SPLICE DETAILS SEE DETAIL B202.

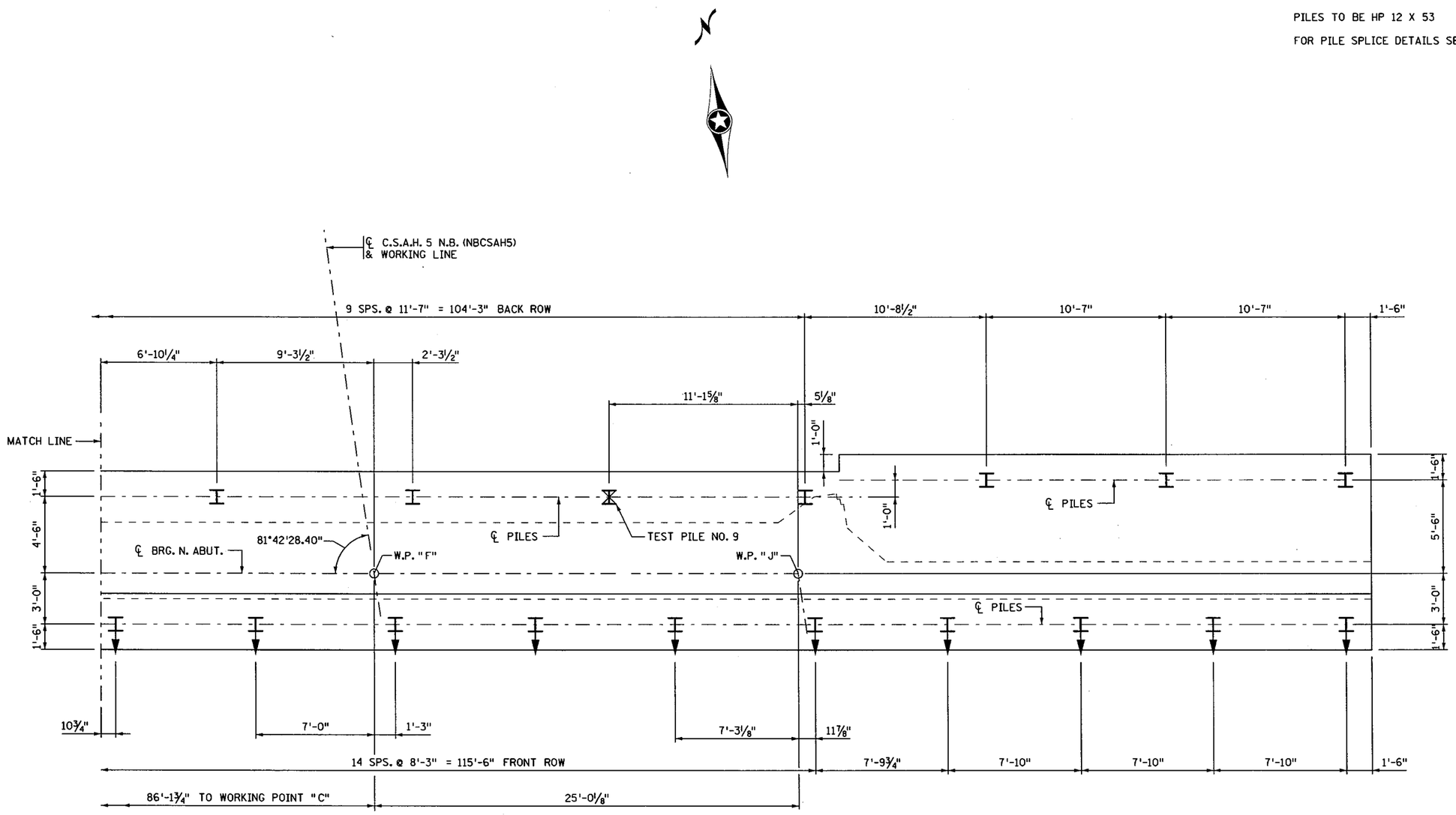

PILE LAYOUT

TIME : 3:40:37 PM
PLOTTED : 02-JUL-2012
PATH & FILENAME: Bridge/Final_Design/1/19036/Cadd-Plan/br19036_abt.dgn
FILENAME: IP_PWP:d1453300\br19036_abt.dgn

S.P. NO. 1901-148 (T.H. 13=117), S.P. NO. 019-605-028, S.P. NO. 179-020-031

CERTIFIED BY Todd R. Stevens (LICENSED PROFESSIONAL ENGINEER) 7/9/12 (DATE) NAME: TODD R. STEVENS LIC. NO. 21312	TITLE: NORTH ABUTMENT DETAILS	DES: GBB CHK: PDG	DR: RLV CHK: TRS	APPROVED: 7-9-12	BRIDGE NO. 19036
		SHEET NO. 29 OF 91 SHEETS			

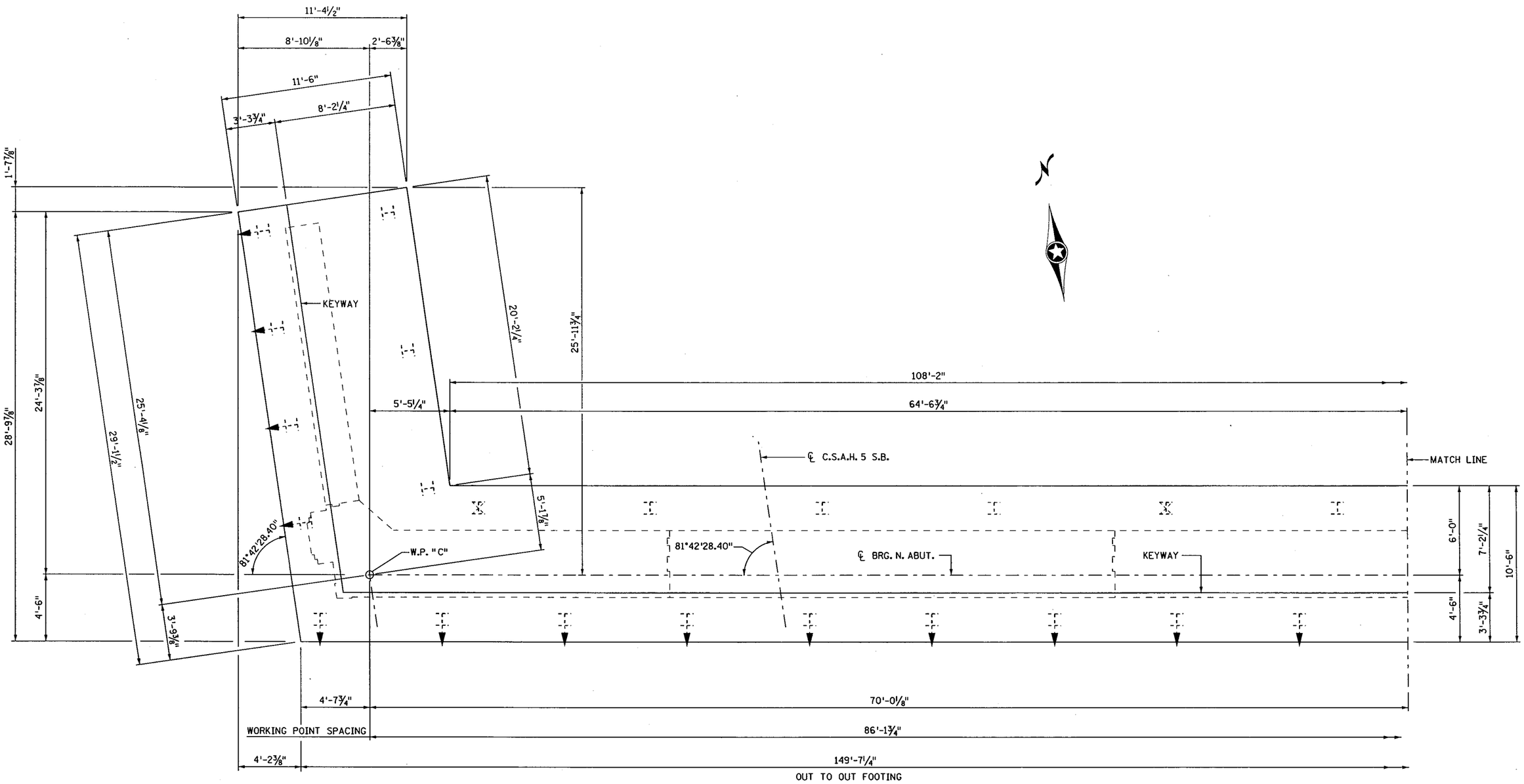

WEST END

FOOTING PLAN

FILENAME: IP_PWP-dl1453300\br19036_abt.dgn

TIME : 3:40:49 PM
PLOTTED : 02-JUL-2012
PATH & FILENAME: Bridge/Final_Design/1/19036/Cadd-Plan/br19036_abt.dgn

S.P. NO. 1901-148 (T.H. 13=117), S.P. NO. 019-605-028, S.P. NO. 179-020-031

CERTIFIED BY Todd R. Stevens 7/9/12 (LICENSED PROFESSIONAL ENGINEER / DATE) NAME: TODD R. STEVENS LIC. NO. 21312	TITLE: NORTH ABUTMENT DETAILS	DES: GBB DR: RLV CHK: PDG CHK: TRS	APPROVED: 7-9-12	BRIDGE NO. 19036
		SHEET NO. 30 OF 91 SHEETS		

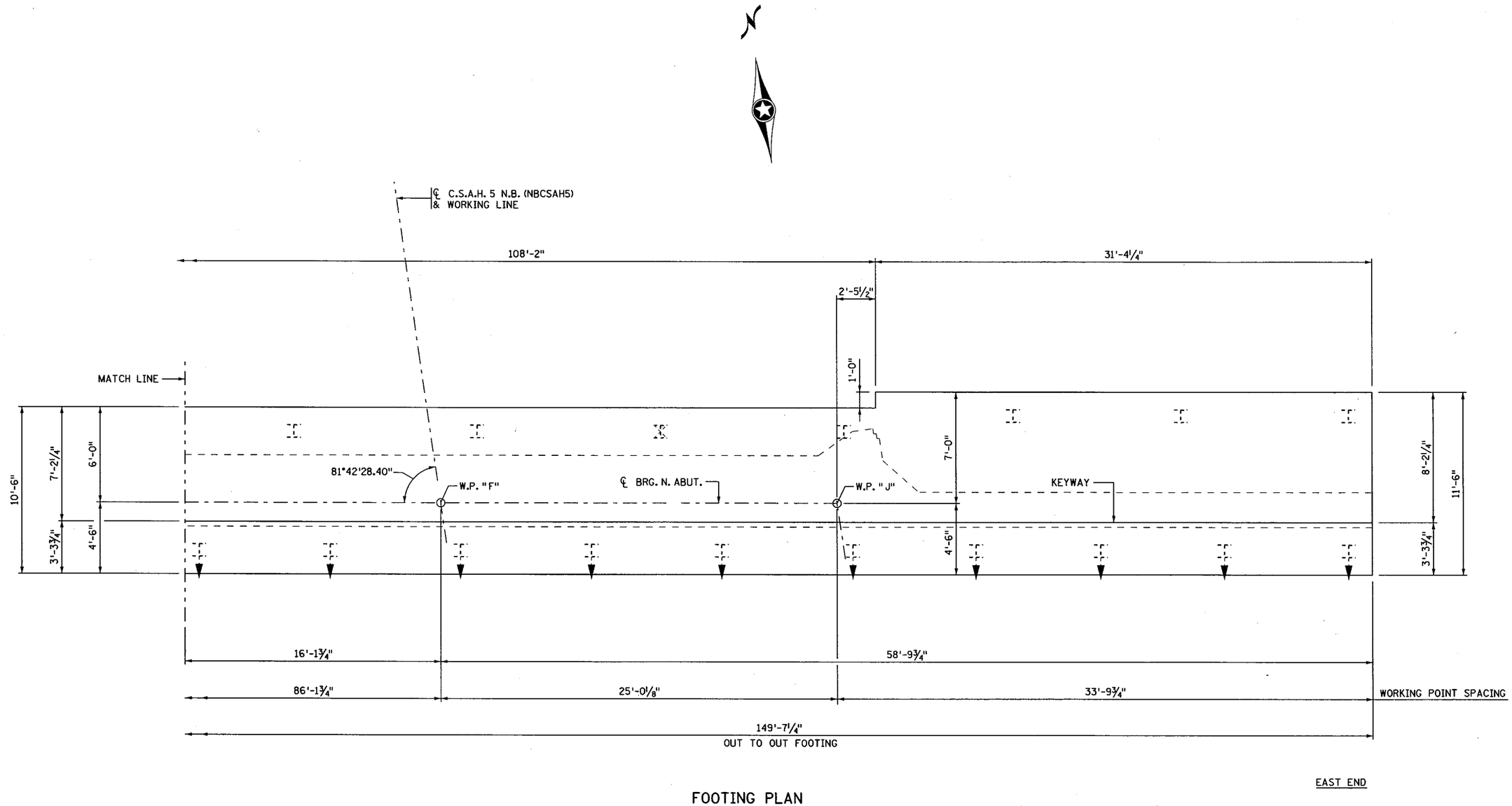

FOOTING PLAN

FILENAME: IP_PWP:d1453300\br19036_abt.dgn

TIME : 3:41:01 PM
PLOTTED : 02-JUL-2012
PATH & FILENAME: Bridge/Final_Design/1/19036/Cadd-Plan/br19036_abt.dgn

S.P. NO. 1901-148 (T.H. 13=117), S.P. NO. 019-605-028, S.P. NO. 179-020-031

CERTIFIED BY Todd R. Stevens 7/9/12 (LICENSED PROFESSIONAL ENGINEER, DATE) NAME: TODD R. STEVENS LIC. NO. 21312	TITLE: NORTH ABUTMENT DETAILS	DES: GBB DR: RLV CHK: PDG CHK: TRS SHEET NO. 31 OF 91 SHEETS	APPROVED: 7-9-12	BRIDGE NO. 19036

NOTES:

1. CONSTRUCTION JOINT AND 2" × 6" KEYWAY IN PARAPET. CONSTRUCTION JOINT AND 2" × 12" KEYWAY IN BRIDGE SEAT.
2. CONSTRUCTION JOINT AND 2" × 6" KEYWAY.
3. MEMBRANE WATERPROOFING STSTEM PER MnDOT 2481.3B.
4. 4" NOMINAL DIAMETER PERFORATED PIPE INCLUDED IN ITEM "DRAINAGE SYSTEM (B910)".
5. ARCHITECTURAL CONCRETE TEXTURE (RANDOM BATTEN) AND ARCHITECTURAL SURFACE FINISH (SINGLE COLOR).
6. 72 HOUR MINIMUM TIME DELAY REQUIRED BETWEEN CONCRETE POURS OF ADJACENT ABUTMENT SECTIONS THAT HAVE VERTICAL CONSTRUCTION JOINTS.
7. ELEVATIONS AT FRONT FACE OF PARAPET.

END BLOCK TO BE INCLUDED IN SUPERSTRUCTURE QUANTITIES.

SEE SHEET 35 FOR SECTION A-A.

SEE SHEET 34 FOR WINGWALL AND DETAILS.

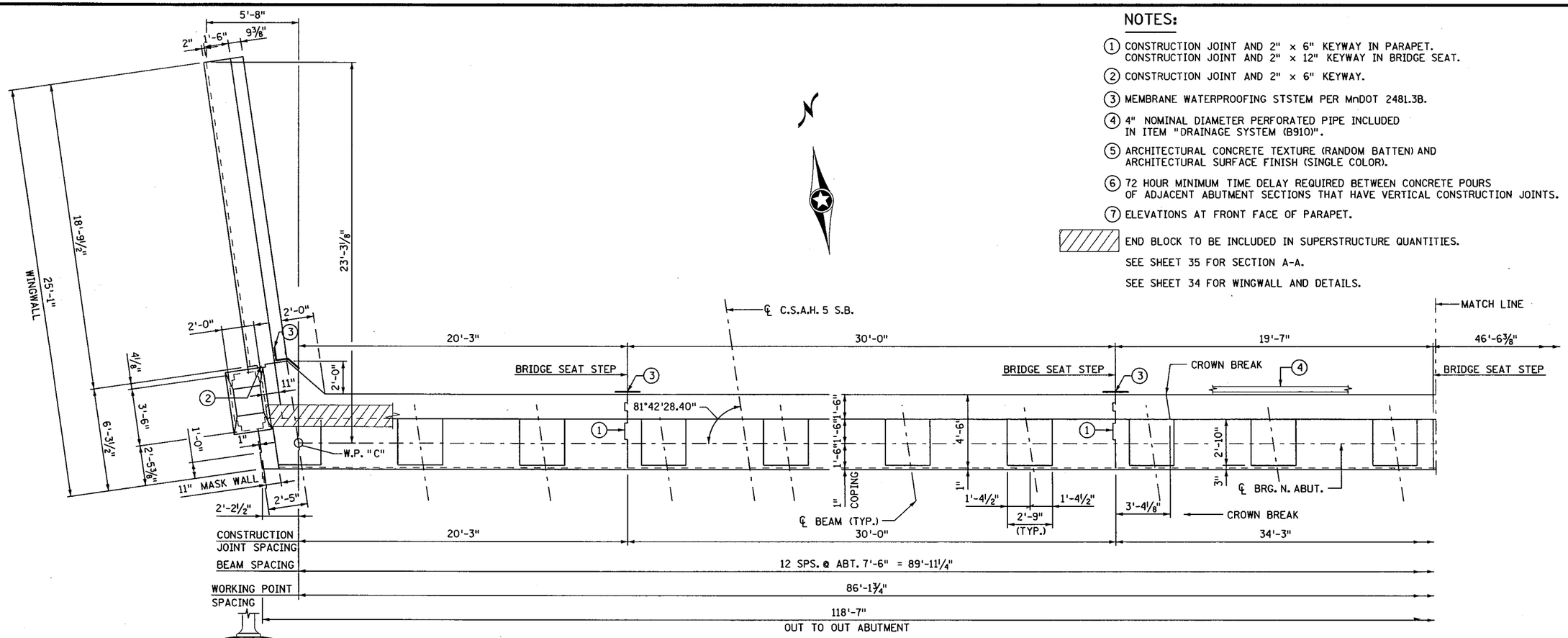

PLAN VIEW

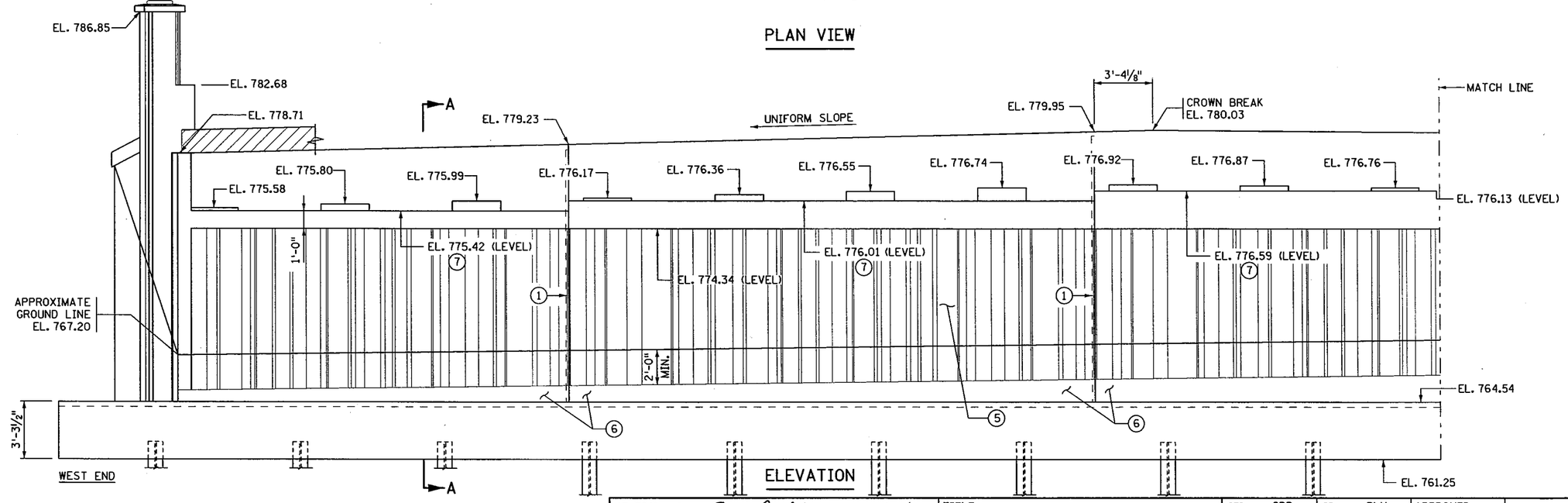

ELEVATION

CERTIFIED BY Todd R. Stevens LICENSED PROFESSIONAL ENGINEER 7/9/12 DATE NAME: TODD R. STEVENS LIC. NO. 21312	TITLE: NORTH ABUTMENT DETAILS	DES: GBB DR: RLV CHK: PDG CHK: TRS SHEET NO. 32 OF 91 SHEETS	APPROVED: 7-9-12 BRIDGE NO. 19036

S.P. NO. 1901-148 (T.H. 13=117), S.P. NO. 019-605-028, S.P. NO. 179-020-031

FILENAME: IP_PWP:d1453300\bri9036_abt.dgn
TIME : 3:41:14 PM
PLOTTED : 02-JUL-2012
PATH & FILENAME: Bridge/Final_Design/1/19036/Cadd-Plan/bri9036_abt.dgn

NOTES:

1. CONSTRUCTION JOINT AND 2" × 6" KEYWAY IN PARAPET. CONSTRUCTION JOINT AND 2" × 12" KEYWAY IN BRIDGE SEAT.
2. CONSTRUCTION JOINT AND 2" × 6" KEYWAY.
3. MEMBRANE WATERPROOFING SYSTEM PER MnDOT 2481.3B.
4. 4" NOMINAL DIAMETER PERFORATED PIPE INCLUDED IN ITEM "DRAINAGE SYSTEM (B910)".
5. ARCHITECTURAL CONCRETE TEXTURE (RANDOM BATTEN) AND ARCHITECTURAL SURFACE FINISH (SINGLE COLOR).
6. 72 HOUR MINIMUM TIME DELAY REQUIRED BETWEEN CONCRETE POURS OF ADJACENT ABUTMENT SECTIONS THAT HAVE VERTICAL CONSTRUCTION JOINTS.
7. 4"Ø PIPE SLEEVES INCLUDED IN BID ITEM "CONDUIT SYSTEM (FUTURE)". SEE CONDUIT SYSTEM FOR DETAILS.
8. ELEVATIONS AT FRONT FACE OF PARAPET.

END BLOCK TO BE INCLUDED IN SUPERSTRUCTURE QUANTITIES.

SEE SHEET 35 FOR SECTION A-A.
SEE SHEET 36 FOR SECTIONS G-G, H-H, J-J AND K-K.
SEE SHEET 34 FOR WINGWALL DETAILS.

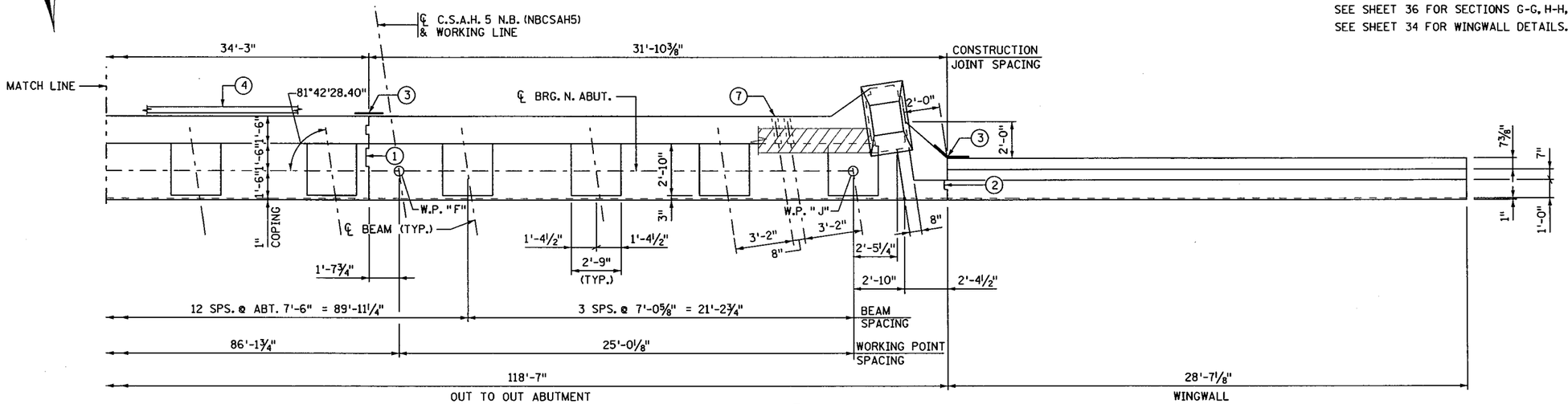

PLAN VIEW

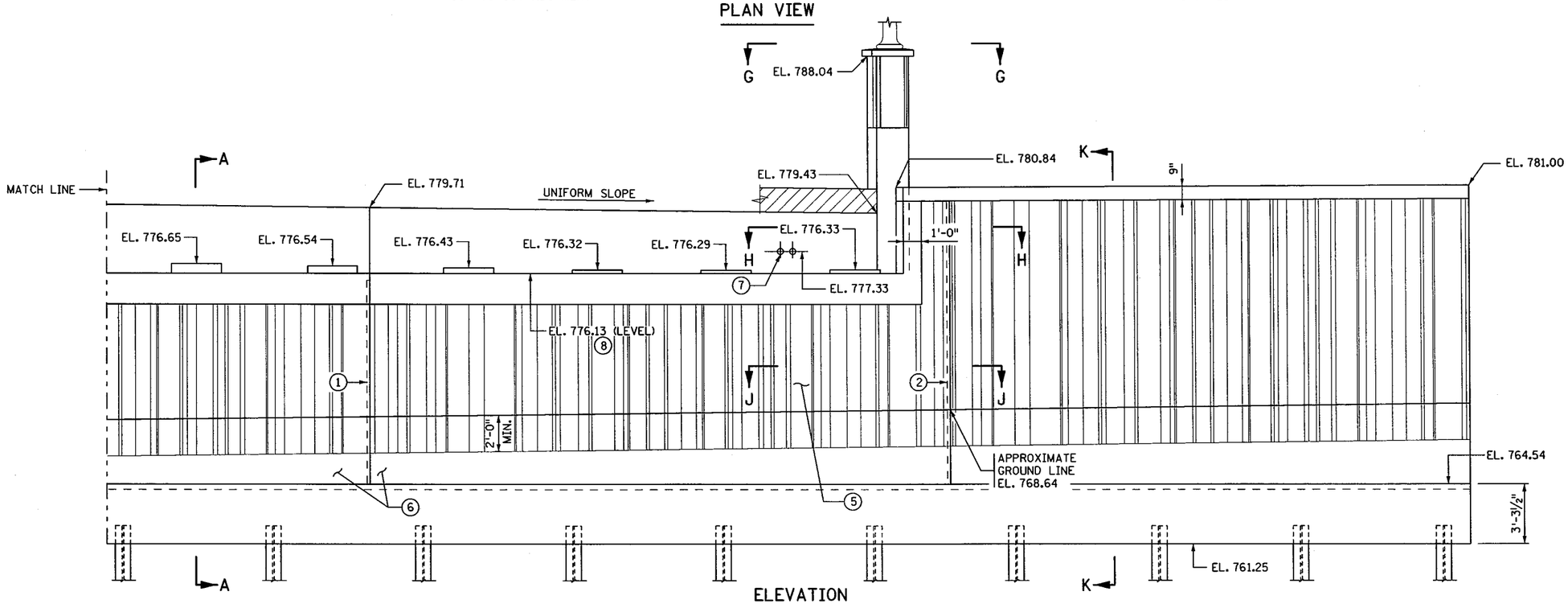

ELEVATION

CERTIFIED BY Todd R. Stevens 7/9/12 (LICENSED PROFESSIONAL ENGINEER, DATE) NAME: TODD R. STEVENS LIC. NO. 21312	TITLE: NORTH ABUTMENT DETAILS	DES: GBB DR: RLV CHK: PDG CHK: TRS	APPROVED: 7-9-12	BRIDGE NO. 19036
		SHEET NO. 33 OF 91 SHEETS		

S.P. NO. 1901-148 (T.H. 13=117), S.P. NO. 019-605-028, S.P. NO. 179-020-031

FILENAME: IP_PWP:dl453300\br19036_abt.dgn
TIME : 3:41:26 PM
PLOTTED : 02-JUL-2012
PATH & FILENAME: Bridge/Final_Design/1/19036/Cadd-Plan/br19036_abt.dgn

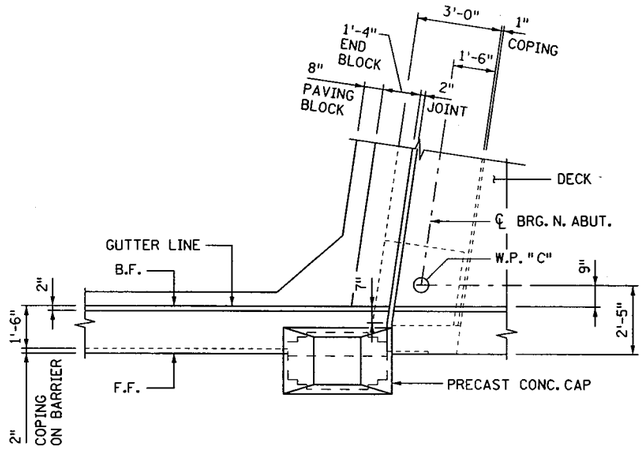

NORTHWEST CORNER DETAIL

NOTES:

1. CONSTRUCTION JOINT AND 2" × 6" KEYWAY.
2. MEMBRANE WATERPROOFING SYSTEM PER MnDOT 2481.3B.
3. ARCHITECTURAL CONCRETE TEXTURE (RANDOM BATTEN) AND ARCHITECTURAL SURFACE FINISH (SINGLE COLOR).
4. 1½" Ø R.S.C. FOR "CONDUIT SYSTEM (LIGHTING)" SEE CONDUIT SYSTEM DETAILS.
5. SEE SHEET 36 FOR PRECAST CONCRETE CAP DETAILS.
6. CONSTRUCTION JOINT AND 2" × 6" × 10" KEYWAY.

SEE SHEET 35 FOR SECTIONS E-E AND F-F.

F.F. DENOTES FRONT FACE.

B.F. DENOTES BACK FACE.

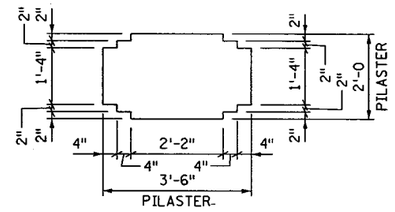

SECTION THRU PILASTER

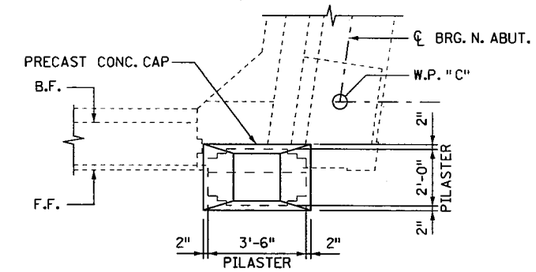

SECTION B-B

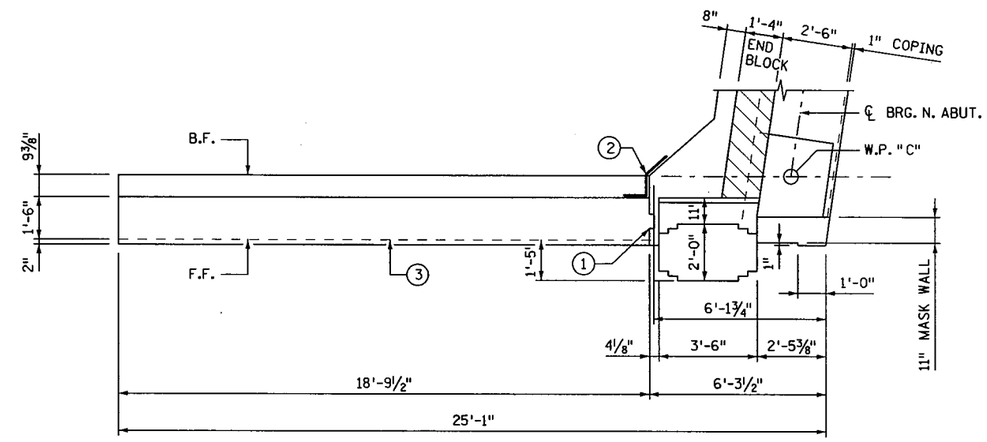

SECTION C-C

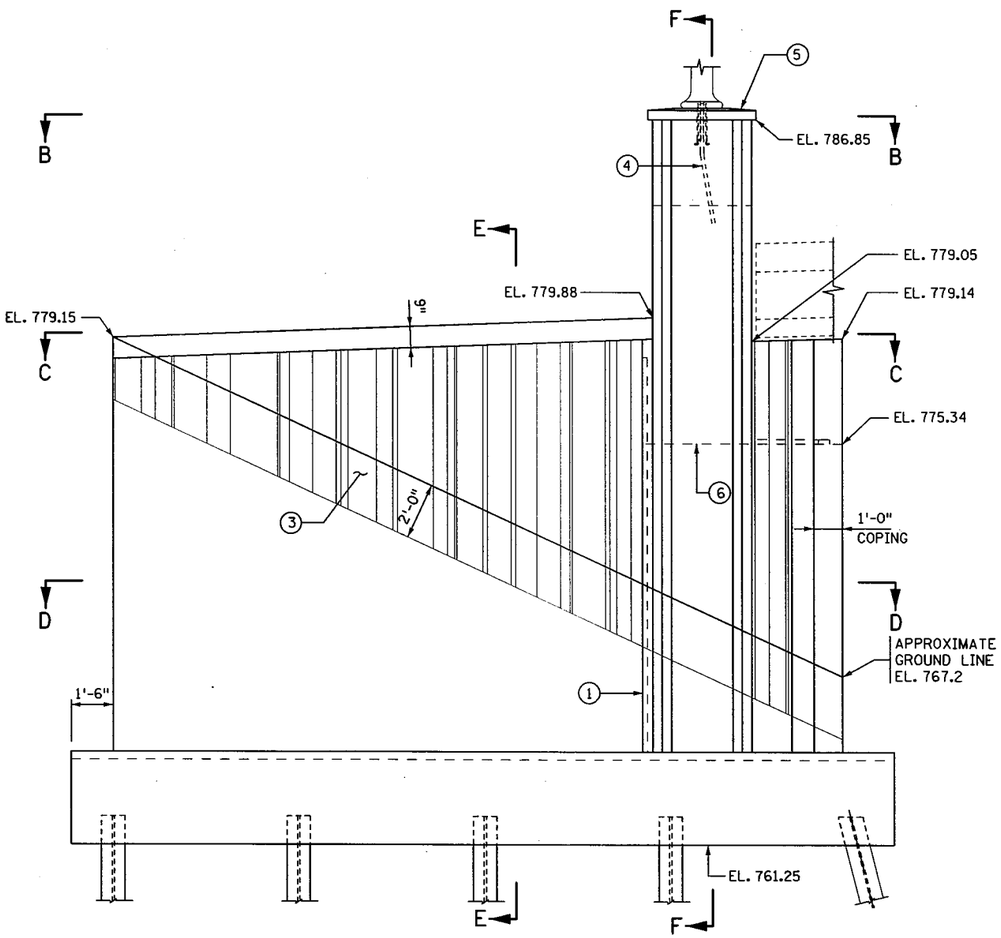

NORTHWEST WINGWALL ELEVATION

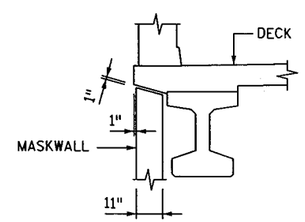

END VIEW OF MASKWALL

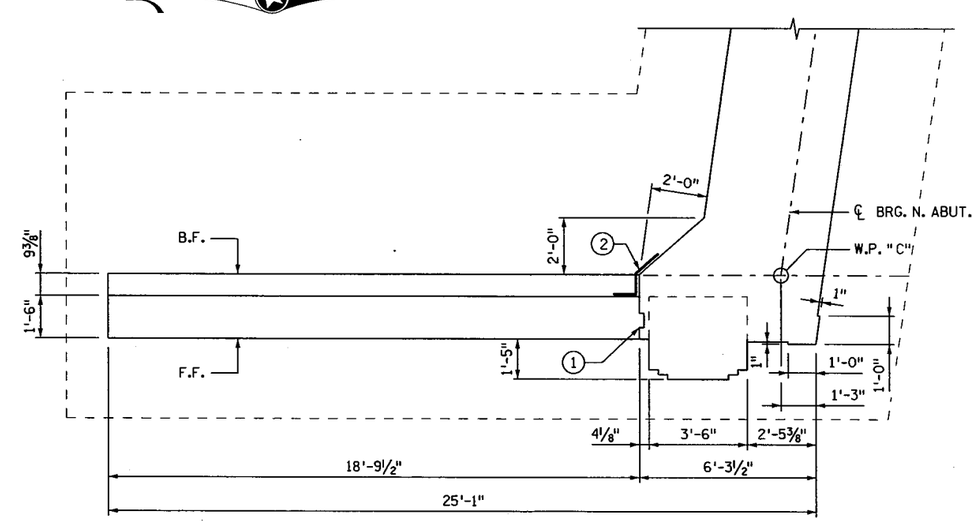

SECTION D-D

S.P. NO. 1901-148 (T.H. 13=117), S.P. NO. 019-605-028, S.P. NO. 179-020-031

CERTIFIED BY Todd R. Stevens 7/9/12
LICENSED PROFESSIONAL ENGINEER DATE
NAME: TODD R. STEVENS LIC. NO. 21312

TITLE: NORTH ABUTMENT DETAILS

DES: GBB	DR: RLV	APPROVED: 7-9-12
CHK: PDG	CHK: TRS	

SHEET NO. 34 OF 91 SHEETS

BRIDGE NO. 19036

FILENAME: IP_PWP:d1453300\br19036_abt.dgn
TIME : 8:59:54 AM
PLOTTED : 03-JUL-2012
PATH & FILENAME: Bridge/Final_Design/1/19036/Cadd-Plan/br19036_abt.dgn

NOTES:

F.F. DENOTES FRONT FACE.

B.F. DENOTES BACK FACE.

SEE SHEET 32 FOR LOCATION OF SECTION A-A.

SEE SHEET 34 FOR LOCATION OF SECTIONS E-E AND F-F.

1. ARCHITECTURAL CONCRETE TEXTURE (RANDOM BATTEN) AND ARCHITECTURAL SURFACE FINISH (SINGLE COLOR).
2. 4" NOMINAL DIAMETER PERFORATED PIPE INCLUDED IN ITEM "DRAINAGE SYSTEM (B910)".
3. MEMBRANE WATERPROOFING SYSTEM PER MnDOT 2481.3B.
4. CONSTRUCTION JOINT & 2" × 6" KEYWAY.
5. CONSTRUCTION JOINT & 2" × 4" KEYWAY.
6. PRECAST CONCRETE CAP. SEE SHEET 36 FOR DETAILS.
7. 1½" Ø R.S.C. (LIGHTING). SEE CONDUIT SYSTEM SHEETS FOR ADDITIONAL DETAILS.

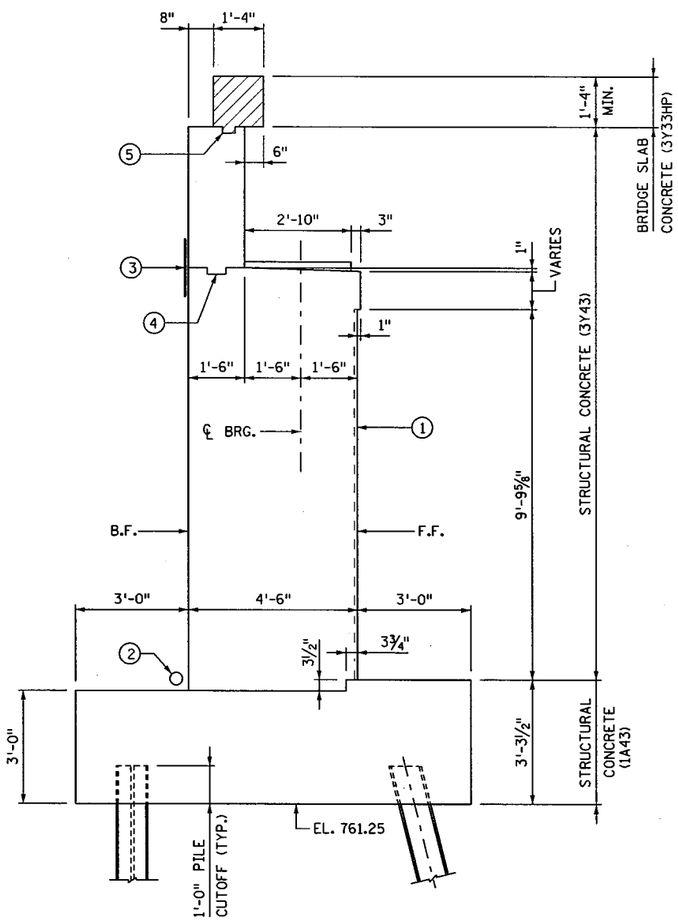

SECTION A-A

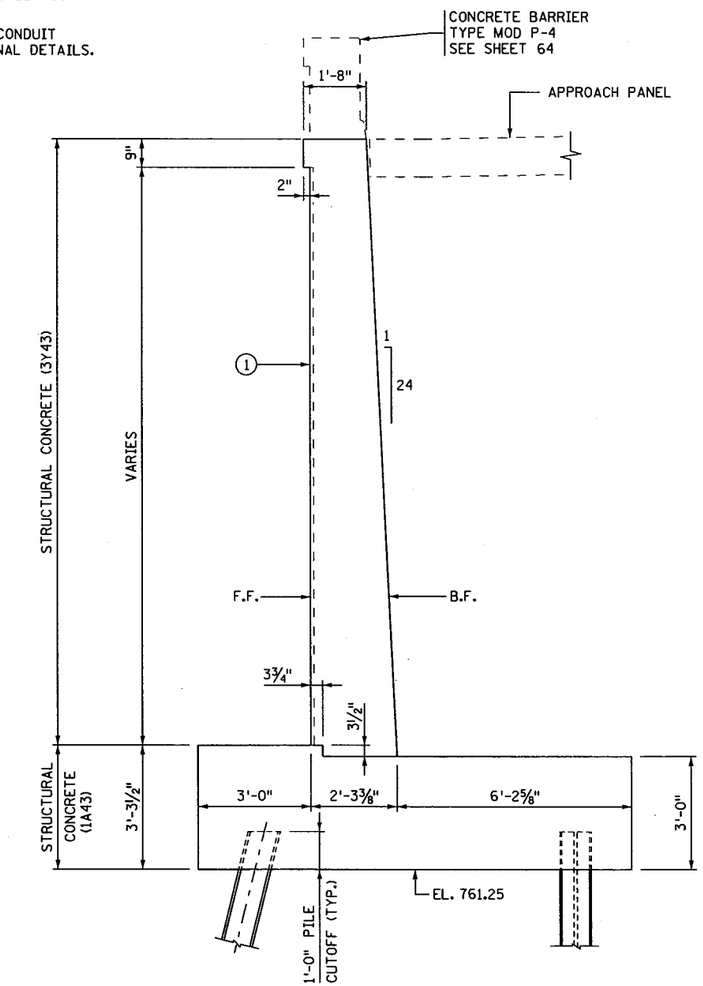

SECTION E-E

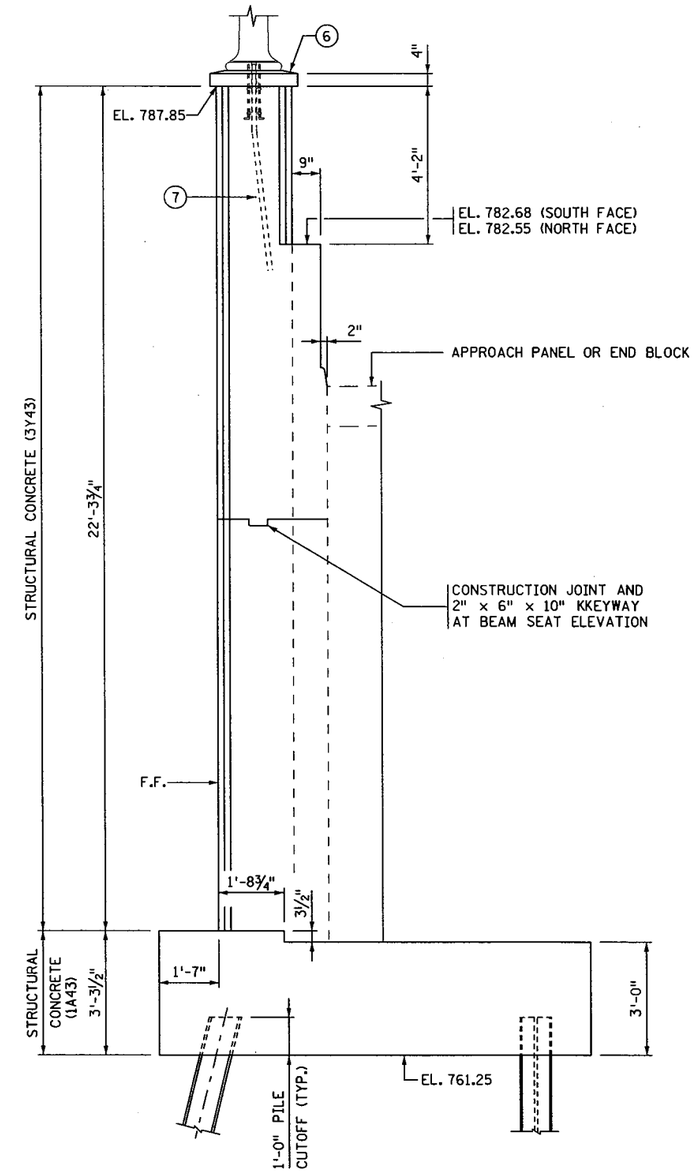

SECTION F-F

FILENAME: IP_PWP-d1453300\br19036_abt.dgn

TIME : 3:41:52 PM
PLOTTED : 02-JUL-2012
PATH & FILENAME: Bridge/Final_Design/1/19036/Cadd-Plan/br19036_abt.dgn

S.P. NO. 1901-148 (T.H. 13=117), S.P. NO. 019-605-028, S.P. NO. 179-020-031

CERTIFIED BY Todd R. Stevens 7/9/12
LICENSED PROFESSIONAL ENGINEER DATE
NAME: TODD R. STEVENS LIC. NO. 21312

TITLE: NORTH ABUTMENT DETAILS

DES: GBB	DR: RLV	APPROVED: 7-9-12
CHK: PDG	CHK: TRS	

SHEET NO. 35 OF 91 SHEETS

BRIDGE NO. 19036

NOTES:

F.F. DENOTES FRONT FACE.

B.F. DENOTES BACK FACE.

SEE SHEET 33 FOR LOCATIONS OF SECTION.

1. ARCHITECTURAL CONCRETE TEXTURE (RANDOM BATTEN) AND ARCHITECTURAL SURFACE FINISH (SINGLE COLOR).
2. 4" NOMINAL DIAMETER PERFORATED PIPE INCLUDED IN ITEM "DRAINAGE SYSTEM (B910)".
3. MEMBRANE WATERPROOFING SYSTEM PER MnDOT 2481.3B.
4. CONSTRUCTION JOINT & 2" × 6" KEYWAY.

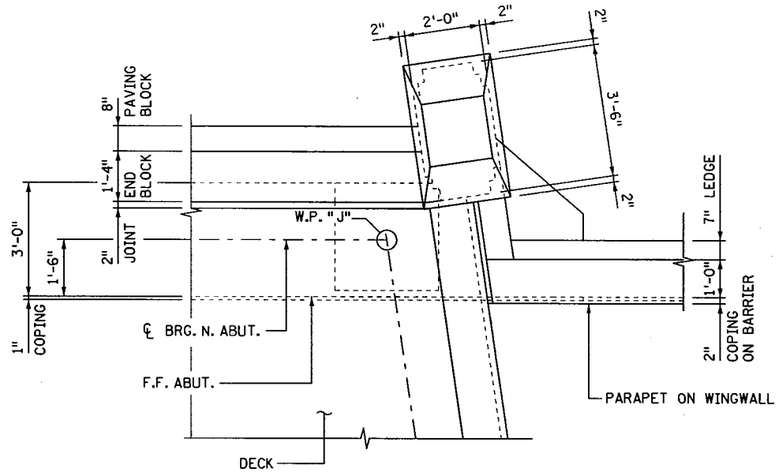

NORTHEAST CORNER DETAIL

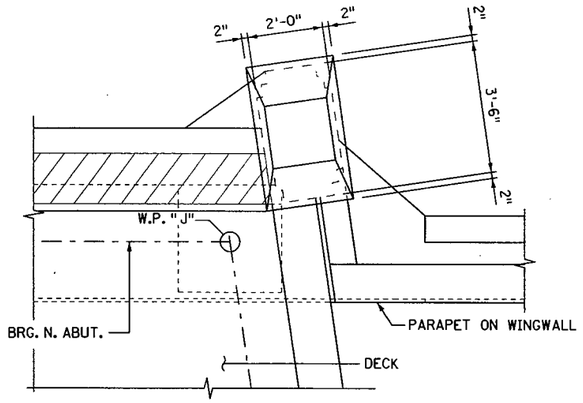

SECTION G-G

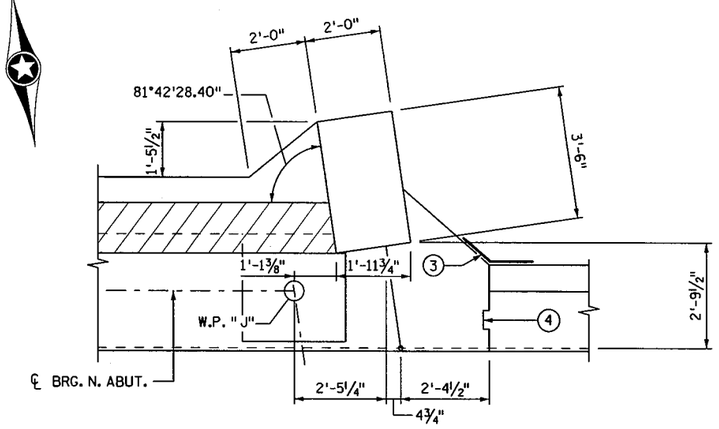

SECTION H-H

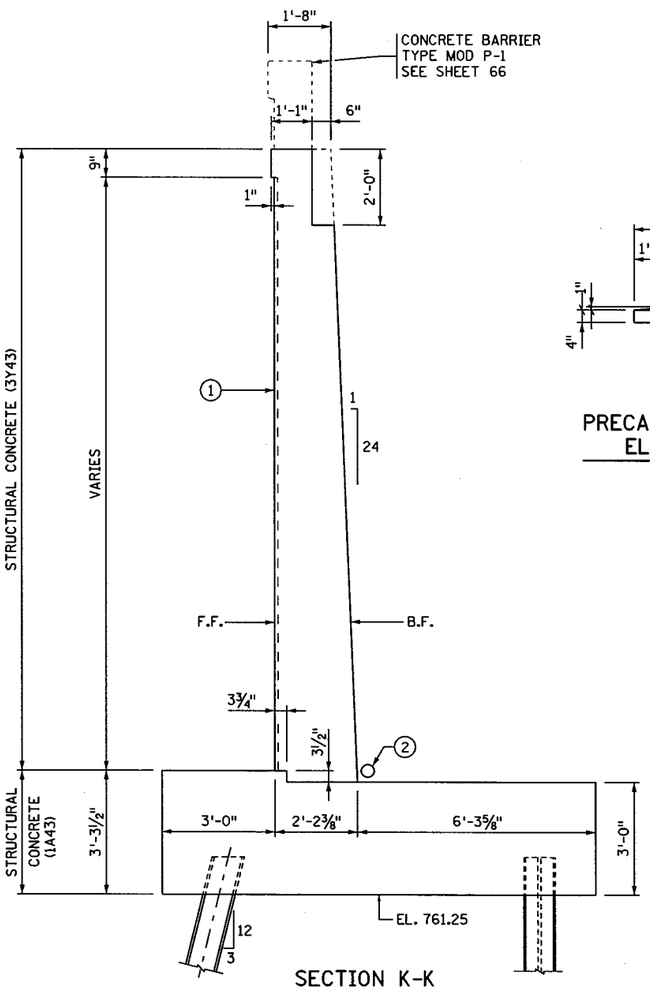

SECTION K-K

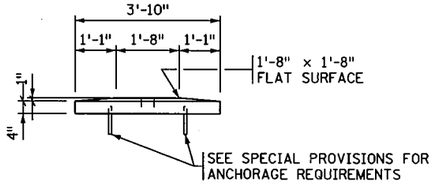

PRECAST CONCRETE CAP ELEVATION VIEW

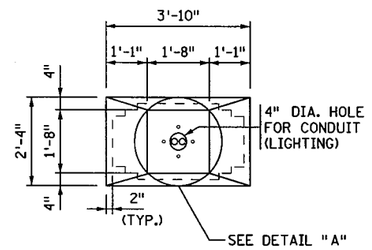

PRECAST CONCRETE CAP PLAN VIEW

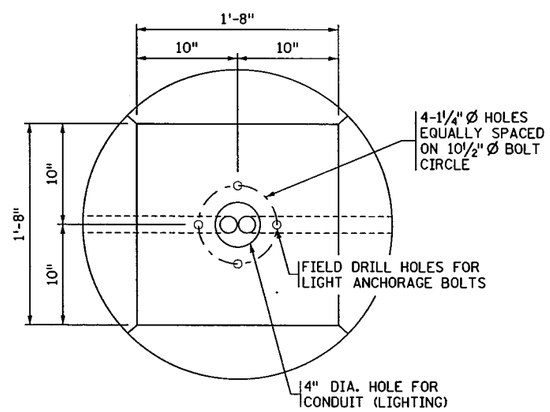

DETAIL "A"

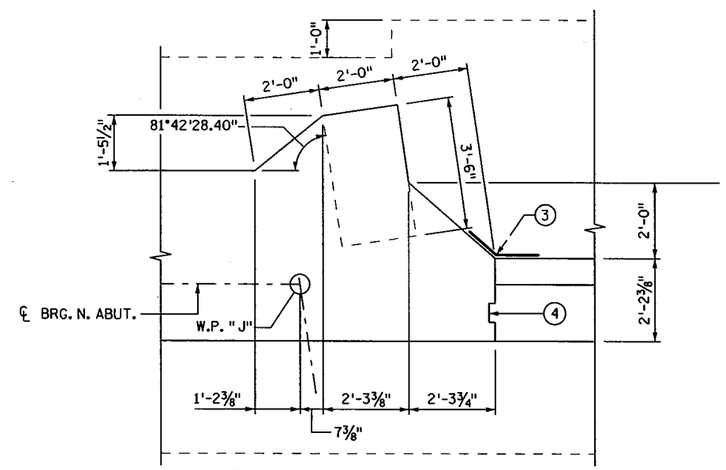

SECTION J-J

S.P. NO. 1901-148 (T.H. 13=117), S.P. NO. 019-605-028, S.P. NO. 179-020-031

CERTIFIED BY Todd R. Stevens 7/9/12 (LICENSED PROFESSIONAL ENGINEER, DATE) NAME: TODD R. STEVENS LIC. NO. 21312	TITLE: NORTH ABUTMENT DETAILS	DES: GBB	DR: RLV	APPROVED: 7-9-12	BRIDGE NO. 19036
		CHK: PDG	CHK: TRS	SHEET NO. 36 OF 91 SHEETS	

FILENAME: IP_PWP:d1453300\br19036_abt.dgn
TIME : 2:28:08 PM
PLOTTED : 03-JUL-2012
PATH & FILENAME: Bridge/Final_Design/1/19036/Cadd-Plan/br19036_abt.dgn

NOTES:

FOR DOWEL INFORMATION SEE SHEET 39.

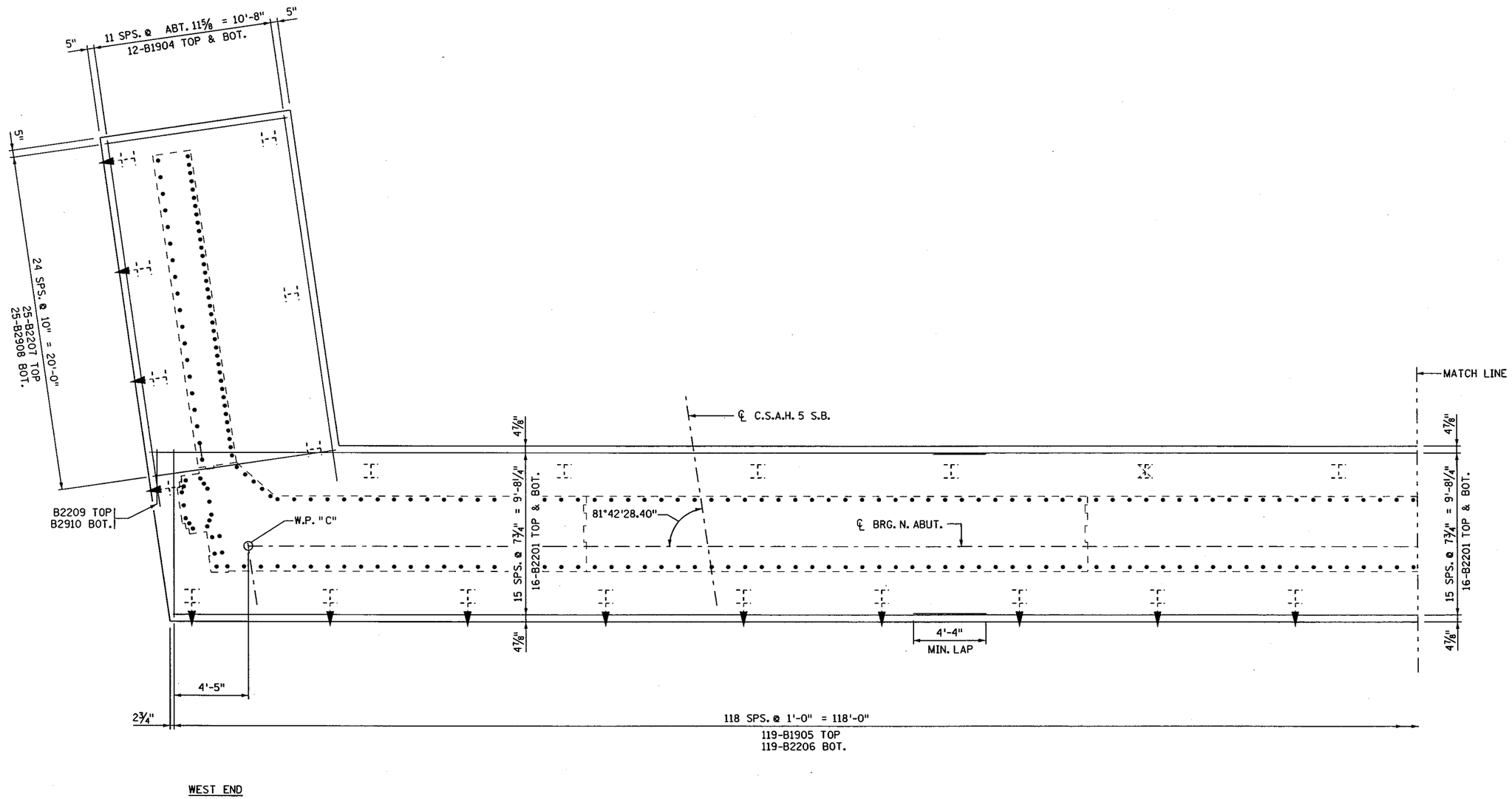

FOOTING REINFORCEMENT PLAN

S.P. NO. 1901-148 (T.H. 13=117), S.P. NO. 019-605-028, S.P. NO. 179-020-031

CERTIFIED BY Todd R. Stevens 7/9/12
LICENSED PROFESSIONAL ENGINEER DATE
NAME: TODD R. STEVENS LIC. NO. 21312

TITLE: NORTH ABUTMENT REINFORCEMENT

DES: GBB	DR: RLV	APPROVED: 7-9-12	BRIDGE NO. 19036
CHK: PDG	CHK: TRS	SHEET NO. 37 OF 91 SHEETS	

FILENAME: IP_PWP-dl453300\bri9036_abt.dgn
TIME : 3:42:29 PM
PLOTTED : 02-JUL-2012
PATH & FILENAME: Bridge/Final_Design/1/19036/Cadd-Plan/bri9036_abt.dgn

NOTES:

FOR DOWEL INFORMATION SEE SHEET 40.

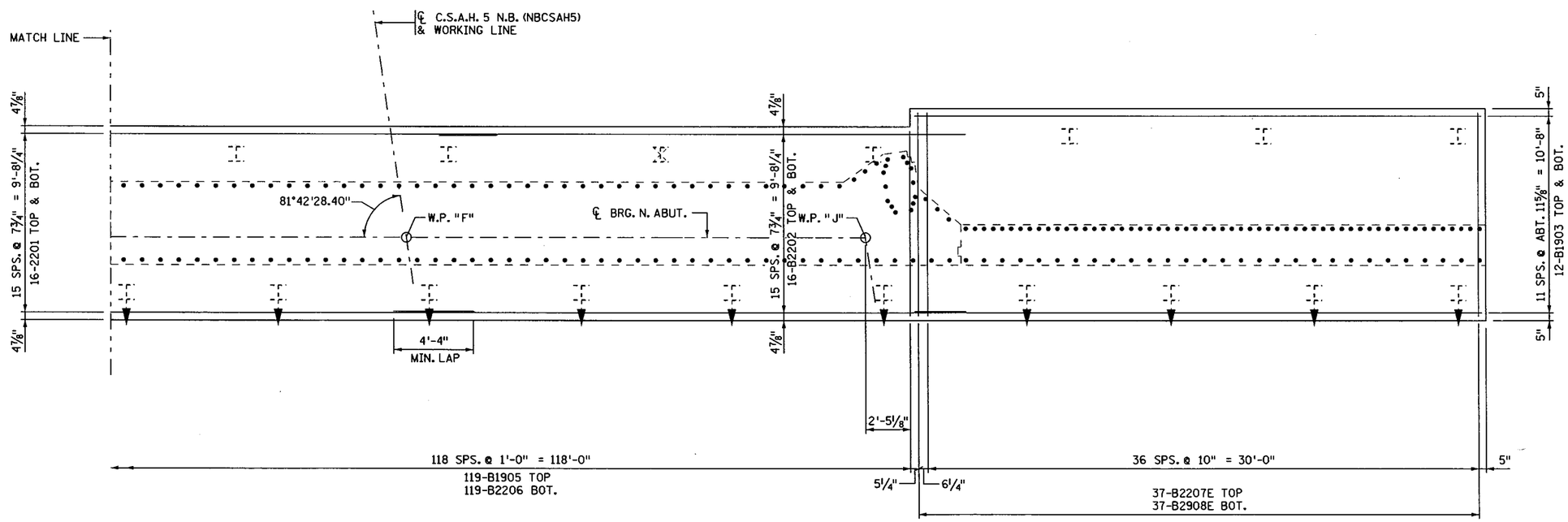

FOOTING REINFORCEMENT PLAN

FILENAME: IP_PWP-d1453300\br19036_abt.dgn

TIME : 8:42:39 AM
PLOTTED : 03-JUL-2012
PATH & FILENAME: Bridge/Final_Design/1/19036/Cadd-Plan/br19036_abt.dgn

S.P. NO. 1901-148 (T.H. 13=117), S.P. NO. 019-605-028, S.P. NO. 179-020-031	CERTIFIED BY Todd R. Stevens 7/9/12 LICENSED PROFESSIONAL ENGINEER DATE NAME: TODD R. STEVENS LIC. NO. 21312	TITLE: NORTH ABUTMENT REINFORCEMENT	DES: GBB DR: RLV CHK: PDG CHK: TRS	APPROVED: 7-9-12	BRIDGE NO. 19036
			SHEET NO. 38 OF 91 SHEETS		

NOTES:

F.F. DENOTES FRONT FACE.
B.F. DENOTES BACK FACE.
E.F. DENOTES EACH FACE.
DIMENSIONS SHOWN AT TOP OF FOOTING.

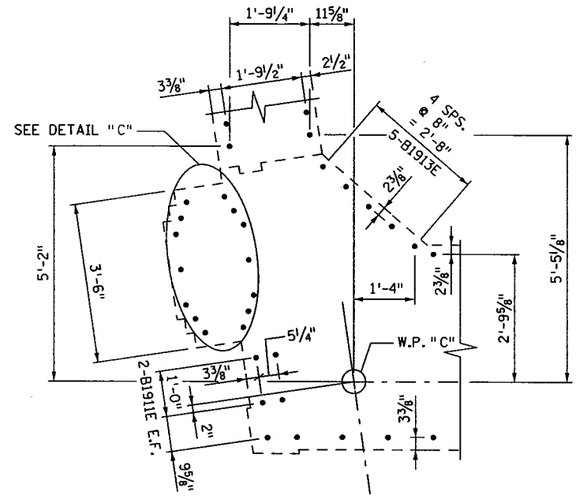

DETAIL "B"

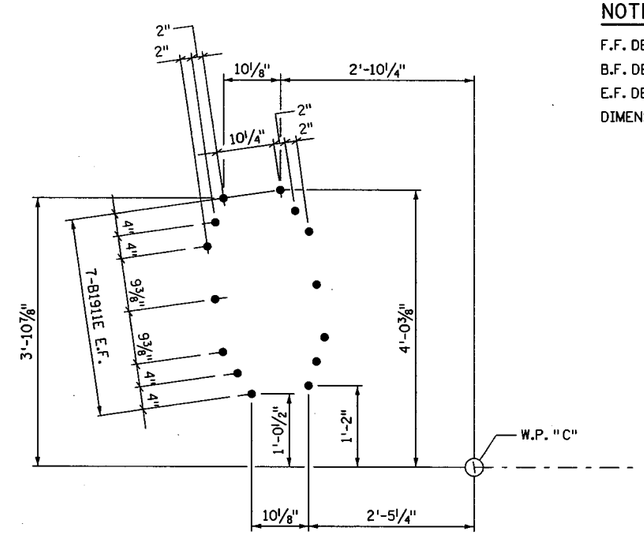

DETAIL "C"

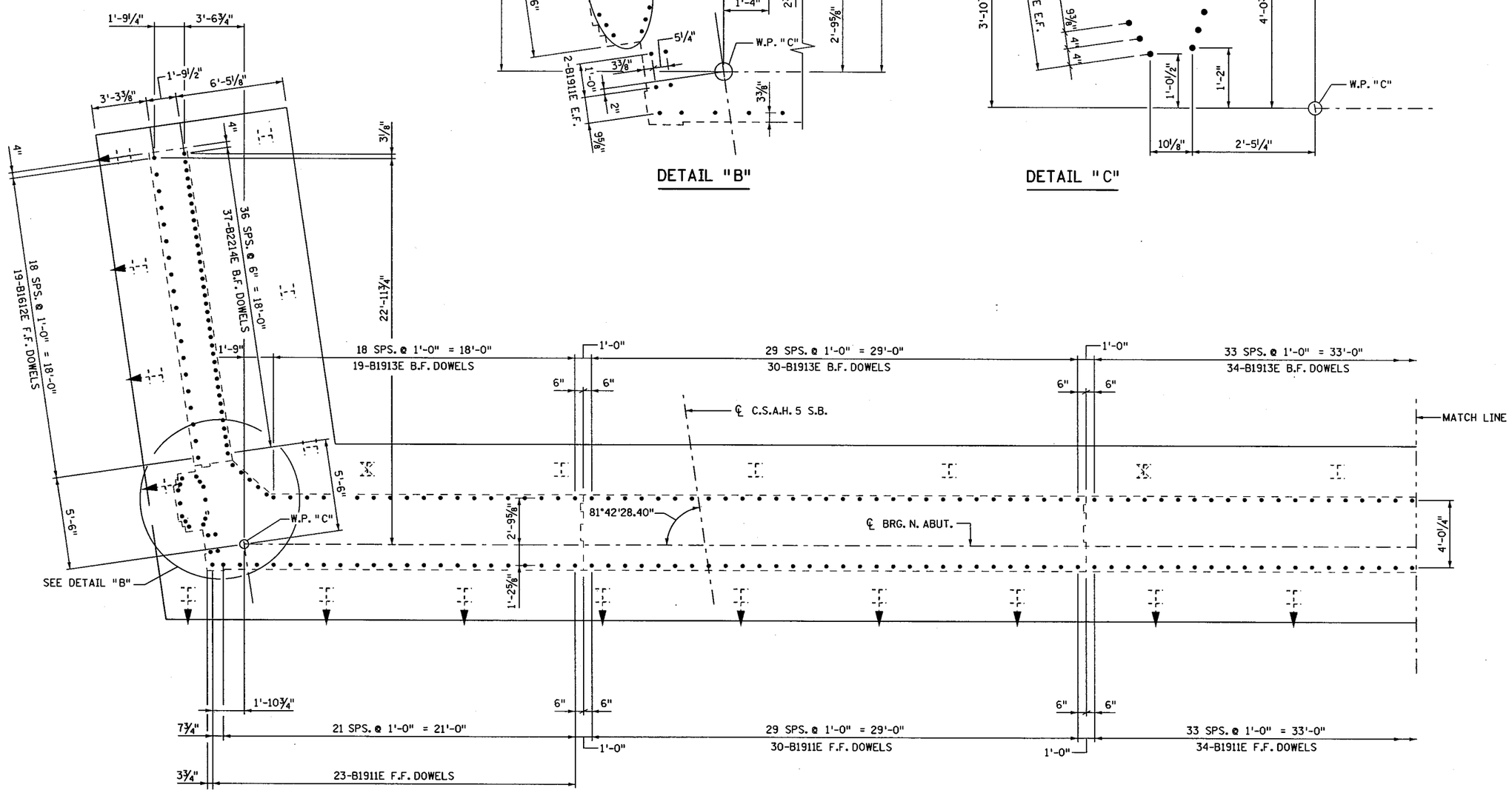

FOOTING DOWEL PLAN

CERTIFIED BY *Todd R. Stevens* 7/9/12 LICENSED PROFESSIONAL ENGINEER DATE NAME: TODD R. STEVENS LIC. NO. 21312	TITLE: NORTH ABUTMENT REINFORCEMENT	DES: GBB DR: RLV CHK: PDG CHK: TRS SHEET NO. 39 OF 91 SHEETS	APPROVED: 7-9-12	BRIDGE NO. 19036

S.P. NO. 1901-148 (T.H. 13=117), S.P. NO. 019-605-028, S.P. NO. 179-020-031

FILENAME: IP_PWP:d1453300\br19036_abt.dgn
TIME : 8:42:03 AM
PLOTTED : 03-JUL-2012
PATH & FILENAME: Bridge/Final_Design/1/19036/Cadd-Plan/br19036_abt.dgn

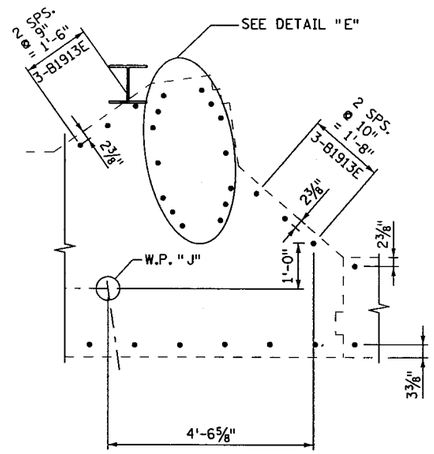

DETAIL "D"

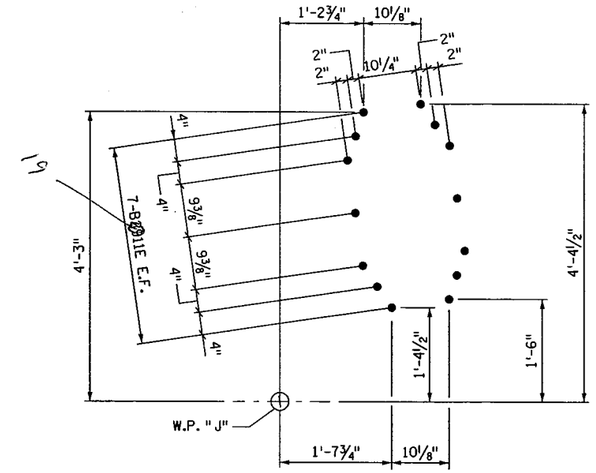

DETAIL "E"

NOTES:

F.F. DENOTES FRONT FACE.

B.F. DENOTES BACK FACE.

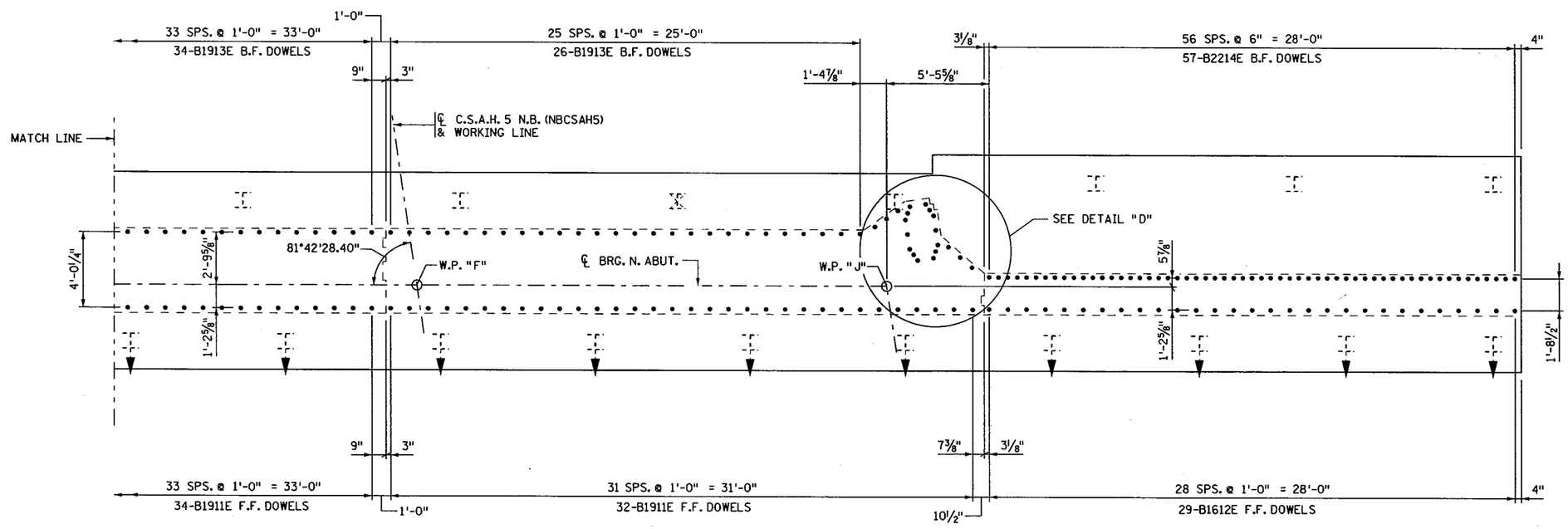

EAST END

FOOTING DOWEL PLAN

S.P. NO. 1901-148 (T.H. 13=117), S.P. NO. 019-605-028, S.P. NO. 179-020-031

CERTIFIED BY Todd R. Stevens 7/9/12
LICENSED PROFESSIONAL ENGINEER DATE
NAME: TODD R. STEVENS LIC. NO. 21312

TITLE: NORTH ABUTMENT REINFORCEMENT

DES: GBB	DR: RLV	APPROVED: 7-9-12
CHK: PDG	CHK: TRS	

SHEET NO. 40 OF 91 SHEETS

BRIDGE NO. 19036

FILENAME: IP_PWP:d1453300\br19036_abt.dgn
PATH & FILENAME: Bridge/Final_Design/1/19036/Cadd-Plan/br19036_abt.dgn
PLOTTED : 03-JUL-2012
TIME : 8:23:39 AM

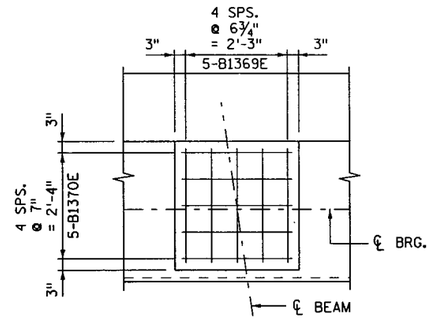

DETAIL "F"

NOTES:

F.F. DENOTES FRONT FACE.
B.F. DENOTES BACK FACE.
E.F. DENOTES EACH FACE.
FOR SECTIONS L-L, M-M AND N-N SEE SHEET 47.
FOR SECTIONS S-S, T-T AND U-U SEE SHEET 43.
FOR SECTIONS R-R AND V-V SEE SHEET 46.
FOR WINGWALL REINFORCEMENT SEE SHEET 45.
(1) CONSTRUCTION JOINT AND 2" x 12" KEYWAY.

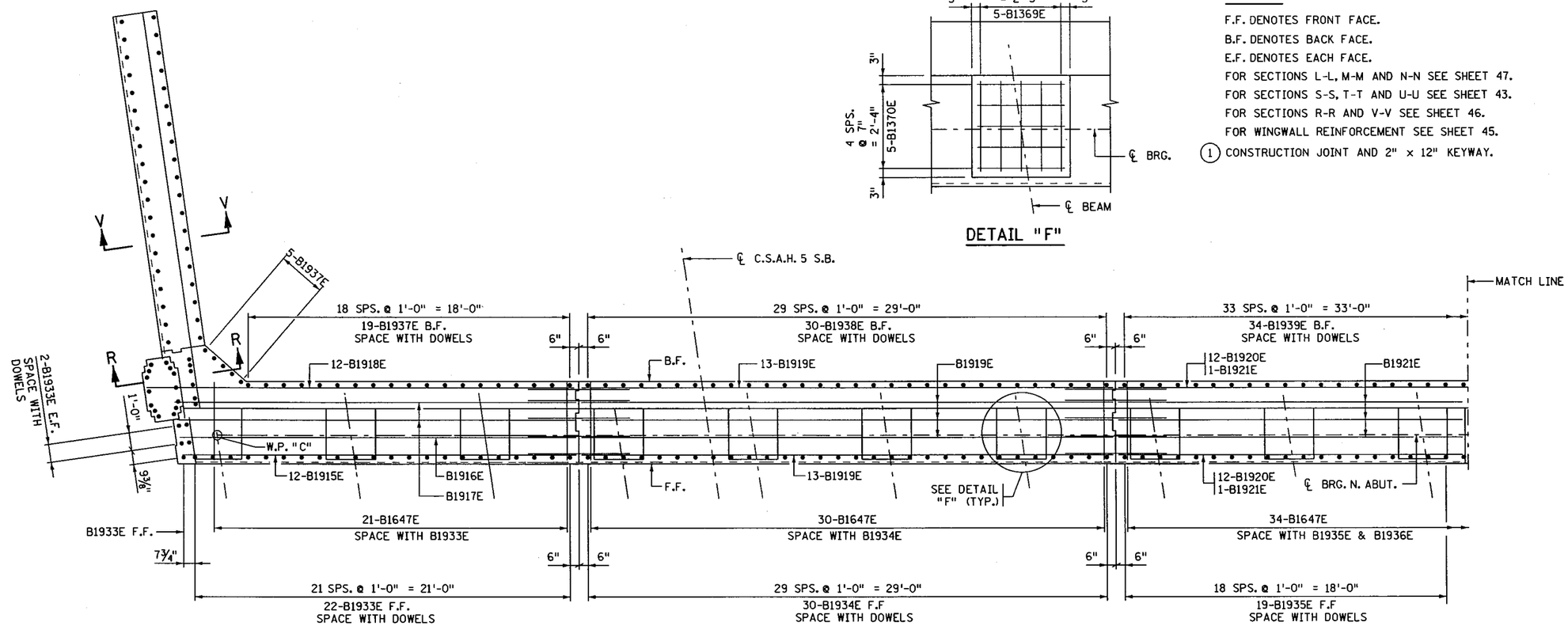

SECTION THRU BRIDGE SEAT

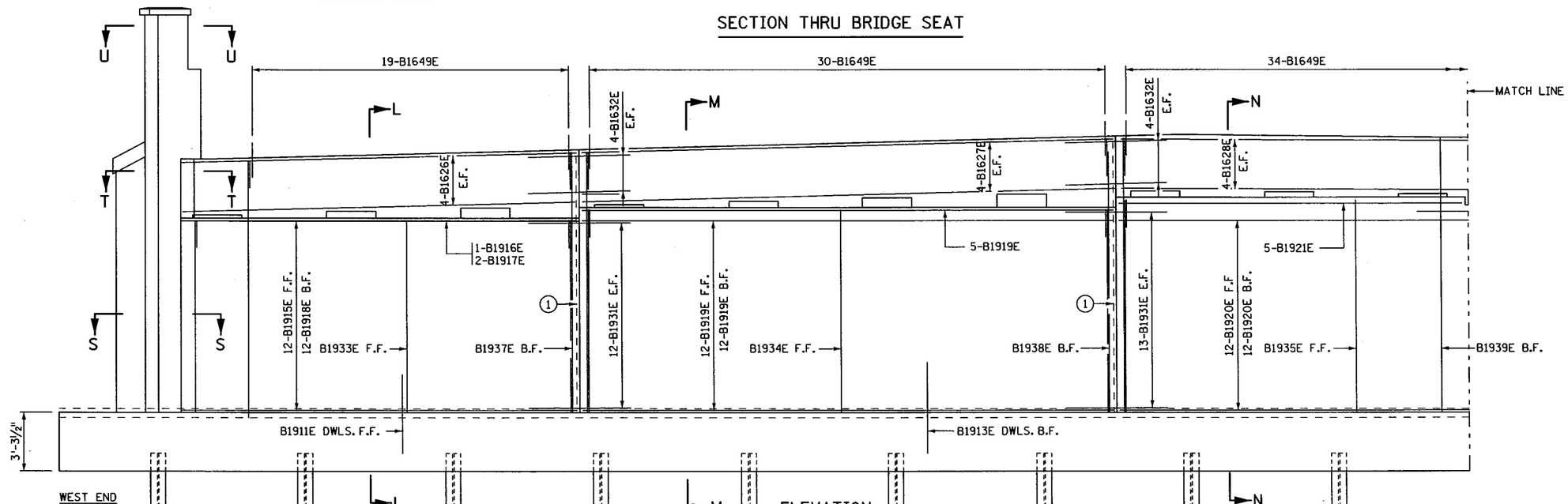

ELEVATION

CERTIFIED BY Todd R. Stevens 7/9/12 LICENSED PROFESSIONAL ENGINEER DATE NAME: TODD R. STEVENS LIC. NO. 21312	TITLE: NORTH ABUTMENT REINFORCEMENT	DES: GBB DR: RLV CHK: PDG CHK: TRS	APPROVED: 7-9-12	BRIDGE NO. 19036
S.P. NO. 1901-148 (T.H. 13=117), S.P. NO. 019-605-028, S.P. NO. 179-020-031		SHEET NO. 41 OF 91 SHEETS		

FILENAME: IP_PWP:dl453300\br19036_abl.dgn
TIME : 7:55:56 AM
PLOTTED : 09-JUL-2012
PATH & FILENAME: Bridge/Final_Design/1/19036/Cadd-Plan/br19036_abl.dgn

NOTES:

F.F. DENOTES FRONT FACE.
B.F. DENOTES BACK FACE.
E.F. DENOTES EACH FACE.
FOR SECTIONS P-P, Q-Q, Z-Z, AA-AA AND BB-BB SEE SHEET 48.
SEE SHEET 46 FOR REINFORCEMENT OF PILASTER.
(1) CONSTRUCTION JOINT AND 2" × 12" KEYWAY.

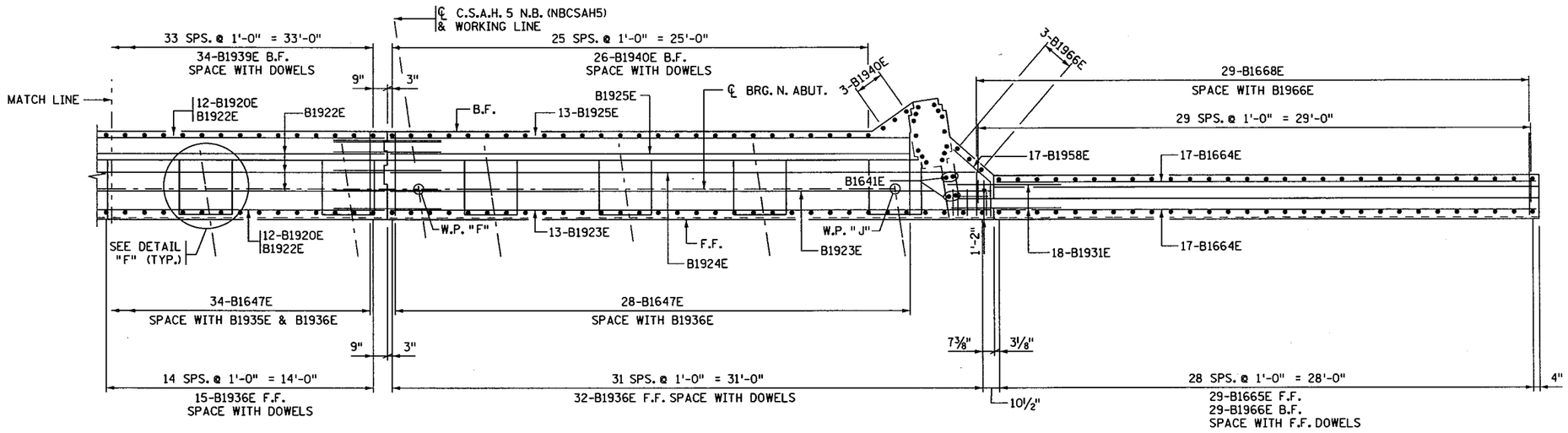

SECTION THRU BRIDGE SEAT

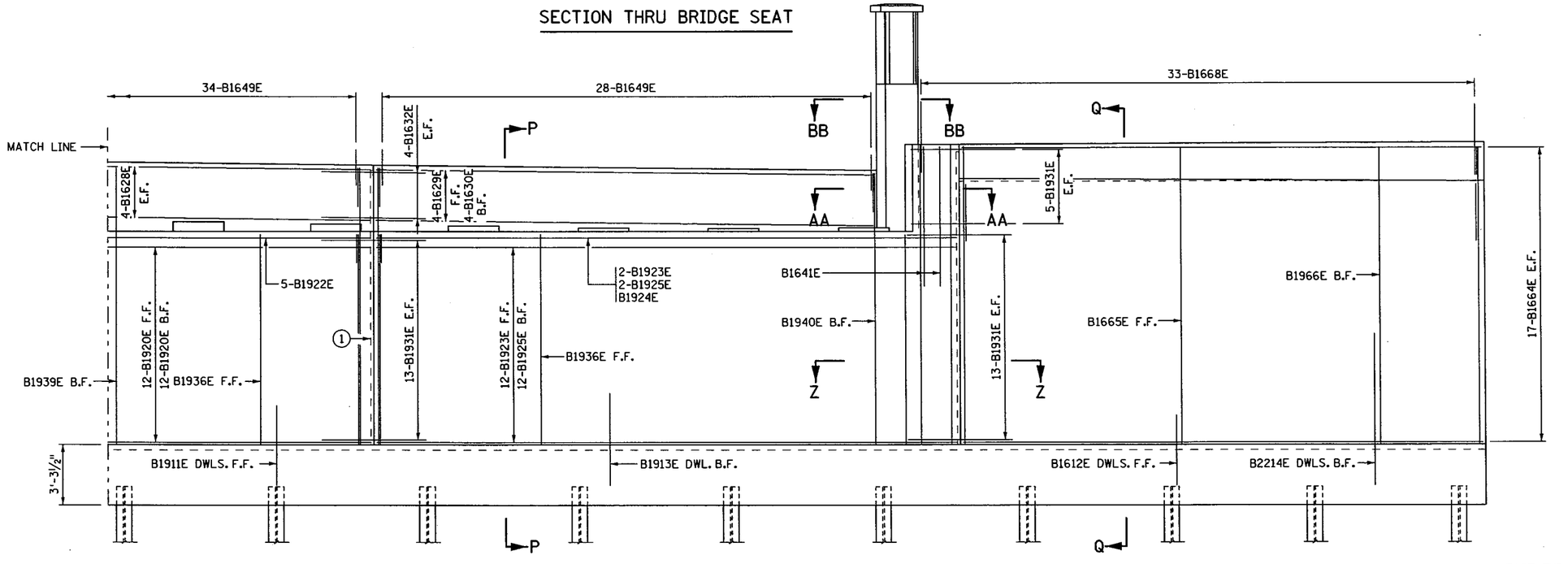

ELEVATION

EAST END

CERTIFIED BY Todd R. Stevens 7/9/12 (LICENSED PROFESSIONAL ENGINEER, DATE) NAME: TODD R. STEVENS LIC. NO. 21312	TITLE: NORTH ABUTMENT REINFORCEMENT	DES: GBB DR: RLV CHK: PDG CHK: TRS APPROVED: 7-9-12 SHEET NO. 42 OF 91 SHEETS	BRIDGE NO. 19036

S.P. NO. 1901-148 (T.H. 13=117), S.P. NO. 019-605-028, S.P. NO. 179-020-031

FILENAME: IP_PWP-d1453300\br19036_abt.dgn
TIME : 10:25:14 AM
PLOTTED : 09-JUL-2012
PATH & FILENAME: Bridge/Final_Design/1/19036/Cadd-Plan/br19036_abt.dgn

NOTES:

F.F. DENOTES FRONT FACE.
B.F. DENOTES BACK FACE.
E.F. DENOTES EACH FACE.
FOR SECTIONS L-L, M-M AND N-N SEE SHEET NO. 47.
FOR WINGWALL REINFORCEMENT SEE SHEET NO.S 45 AND 46.

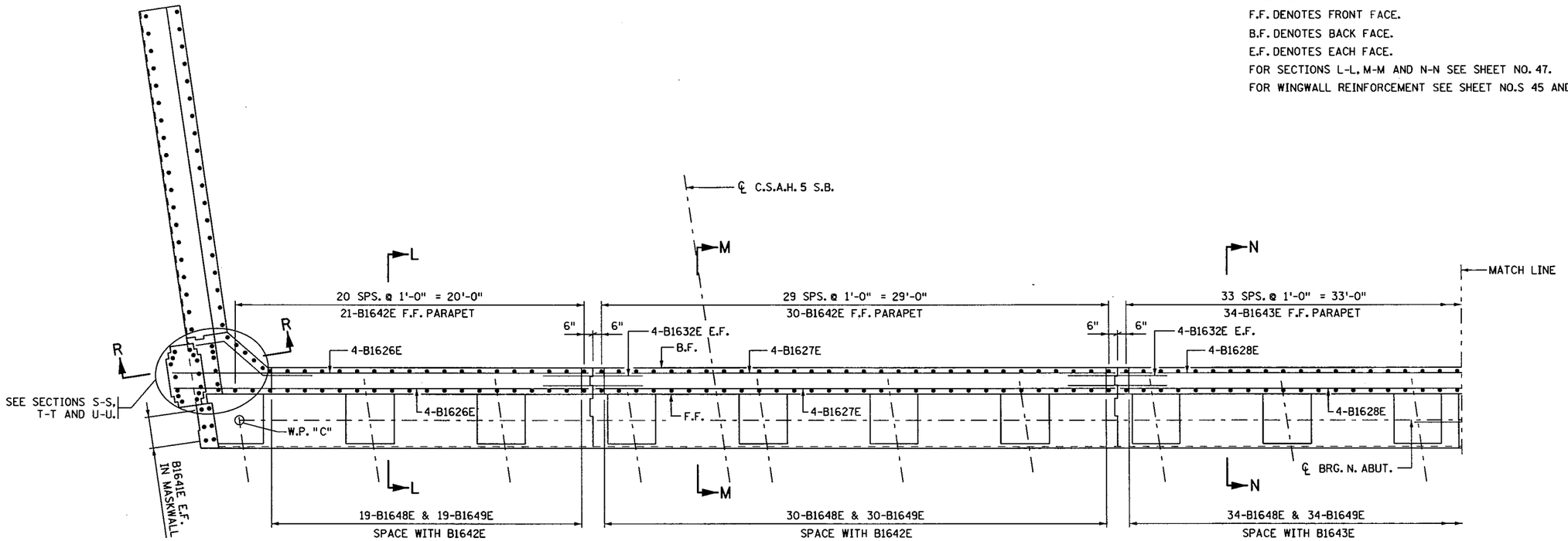

WEST END

SECTION THRU PARAPET

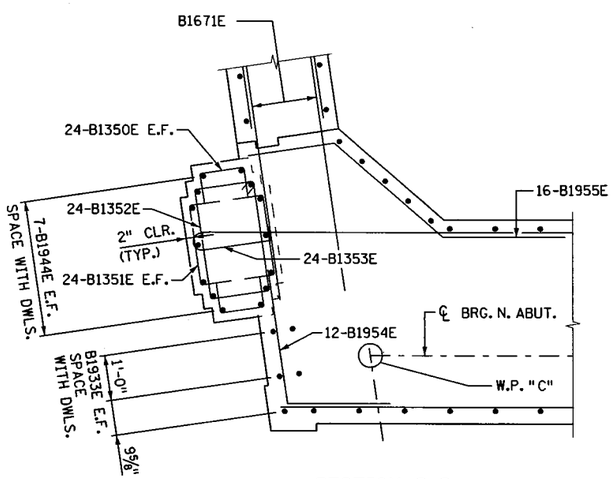

SECTION S-S

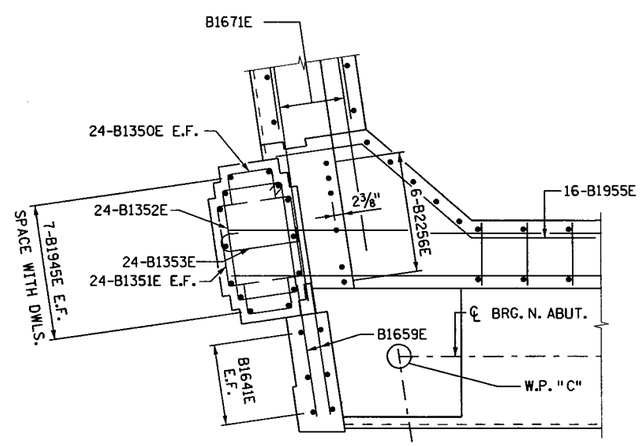

SECTION T-T

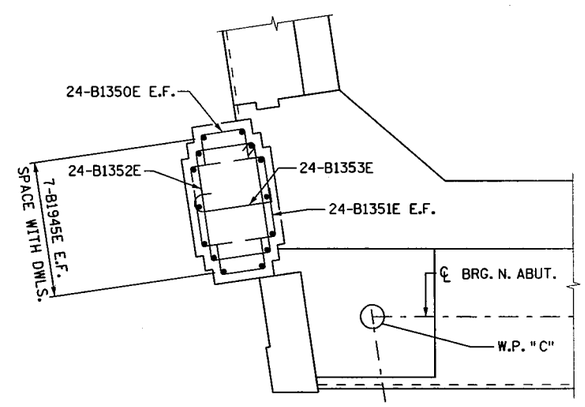

SECTION U-U

S.P. NO. 1901-148 (T.H. 13=117), S.P. NO. 019-605-028, S.P. NO. 179-020-031

CERTIFIED BY Todd R. Stevens 7/9/12
LICENSED PROFESSIONAL ENGINEER DATE
NAME: TODD R. STEVENS LIC. NO. 21312

TITLE: NORTH ABUTMENT REINFORCEMENT

DES: GBB	DR: RLV	APPROVED: 7-9-12
CHK: PDG	CHK: TRS	

SHEET NO. 43 OF 91 SHEETS

BRIDGE NO. 19036

FILENAME: IP_PWP:dl453300\br19036_abt.dgn
TIME : 11:08:37 AM
PLOTTED : 09-JUL-2012
PATH & FILENAME: Bridge/Final_Design/1/19036/Cadd-Plan/br19036_abt.dgn

NOTES:

F.F. DENOTES FRONT FACE.
B.F. DENOTES BACK FACE.
E.F. DENOTES EACH FACE.
FOR SECTIONS P-P, Q-Q, Z-Z, AA-AA AND BB-BB SEE SHEET NO. 48.
SEE SHEET NO. 46 FOR REINFORCEMENT OF PILASTER.

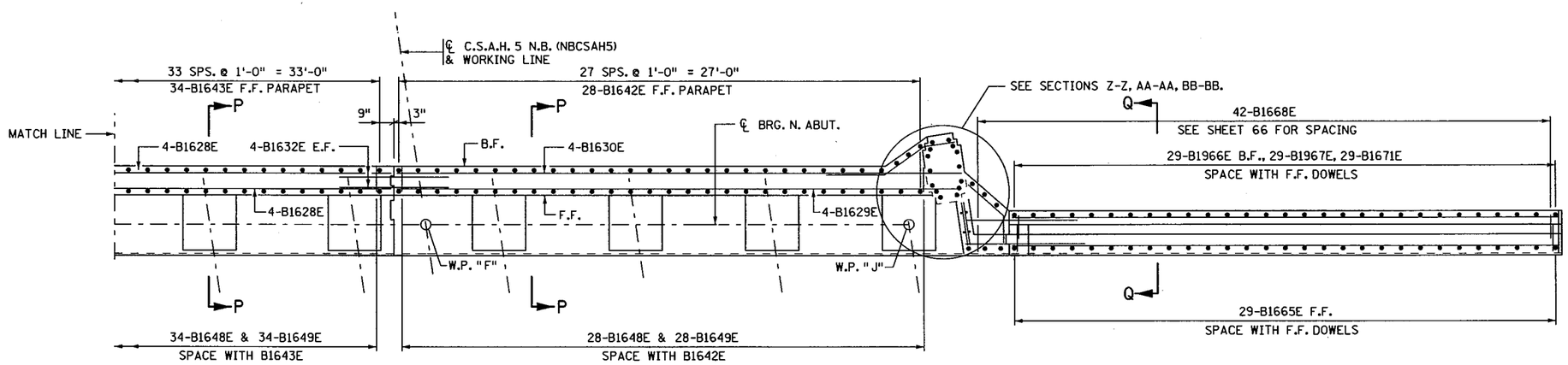

EAST END

SECTION THRU PARAPET

CERTIFIED BY Todd R. Stevens 7/9/12 (LICENSED PROFESSIONAL ENGINEER / DATE) NAME: TODD R. STEVENS LIC. NO. 21312	TITLE: NORTH ABUTMENT REINFORCEMENT	DES: GBB DR: RLV CHK: PDG CHK: TRS	APPROVED: 7-9-12	BRIDGE NO. 19036
S.P. NO. 1901-148 (T.H. 13=117), S.P. NO. 019-605-028, S.P. NO. 179-020-031		SHEET NO. 44 OF 91 SHEETS		

FILENAME: IP_PWP-dl453300\br19036_abt.dgn
TIME : 10:36:34 AM
PLOTTED : 09-JUL-2012
PATH & FILENAME: Bridge/Final_Design/1/19036/Cadd-Plan/br19036_abt.dgn

NOTES:

(1) CONSTRUCTION JOINT AND 2" x 6" KEYWAY.

F.F. DENOTES FRONT FACE.

B.F. DENOTES BACK FACE.

SEE SHEET NO. 46 FOR SECTIONS R-R AND V-V.

SEE SHEET NO. 36 FOR PRECAST CONCRETE CAP DETAILS.

SEE SHEET NO. 46 FOR REINFORCEMENT OF PILASTER.

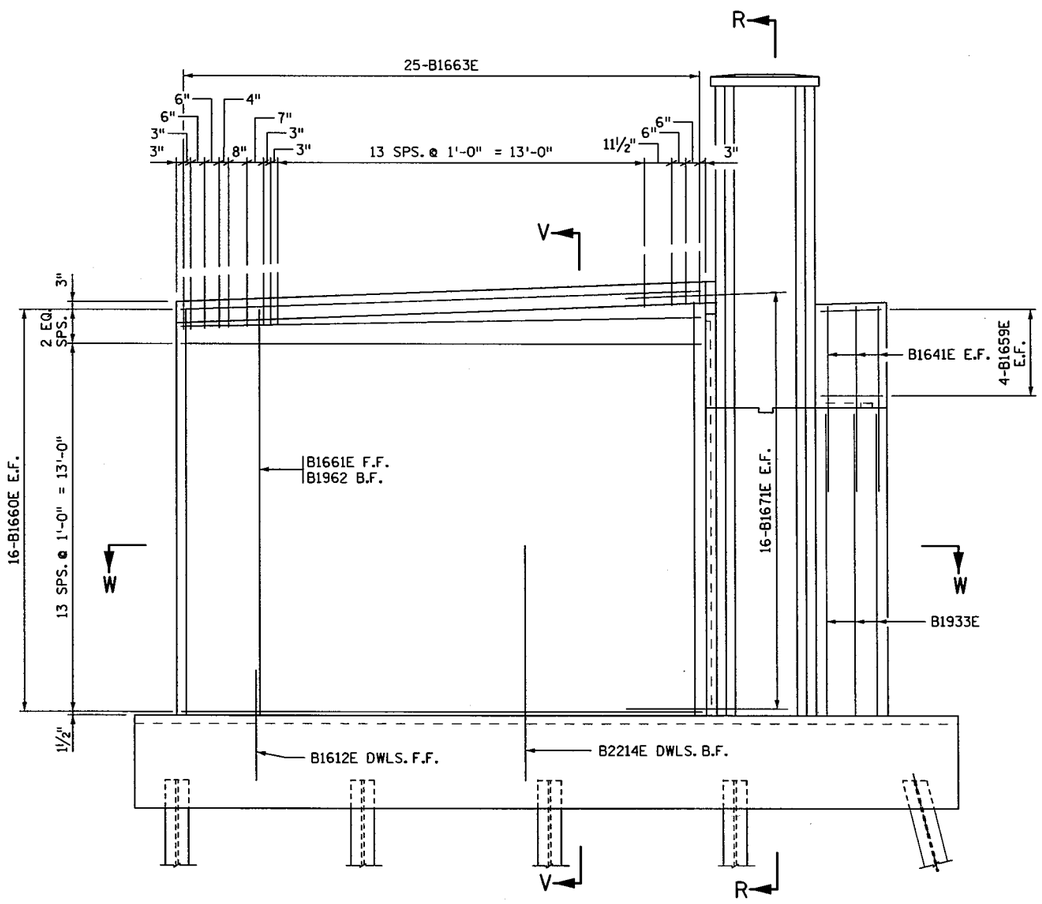

NORTHWEST WINGWALL ELEVATION

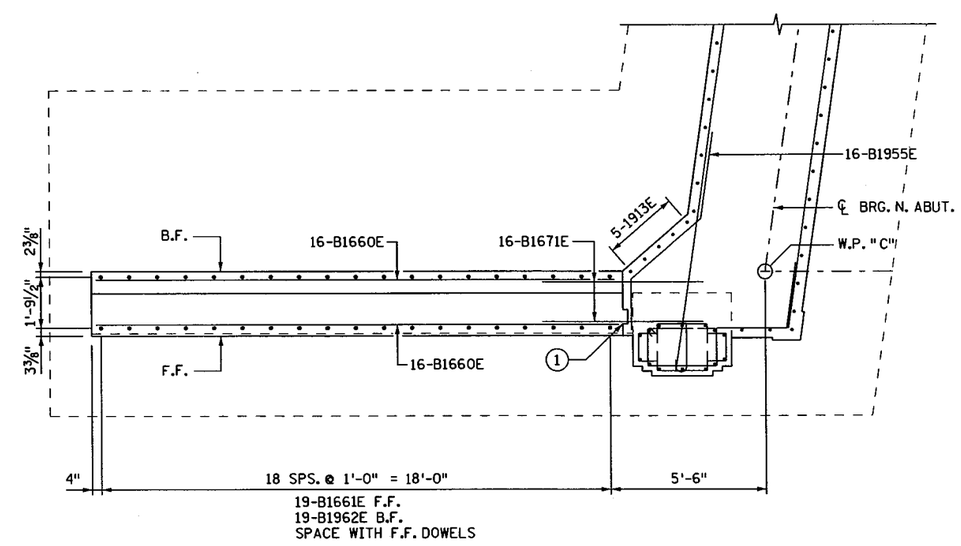

SECTION W-W

S.P. NO. 1901-148 (T.H. 13=117), S.P. NO. 019-605-028, S.P. NO. 179-020-031

CERTIFIED BY Todd R. Stevens 7/9/12 LICENSED PROFESSIONAL ENGINEER DATE NAME: TODD R. STEVENS LIC. NO. 21312	TITLE: NORTH ABUTMENT REINFORCEMENT	DES: GBB DR: RLV CHK: PDG CHK: TRS	APPROVED: 7-9-12	BRIDGE NO. 19036
		SHEET NO. 45 OF 91 SHEETS		

FILENAME: IP_PWP-d1453300\bri9036_abt.dgn
TIME : 10:39:09 AM
PLOTTED : 09-JUL-2012
PATH & FILENAME: Bridge/Final_Design/I/19036/Cadd-Plan/bri9036_abt.dgn

NOTES:

F.F. DENOTES FRONT FACE.
B.F. DENOTES BACK FACE.
SEE SHEET NO.S 41 AND 42 FOR LOCATIONS OF SECTIONS .

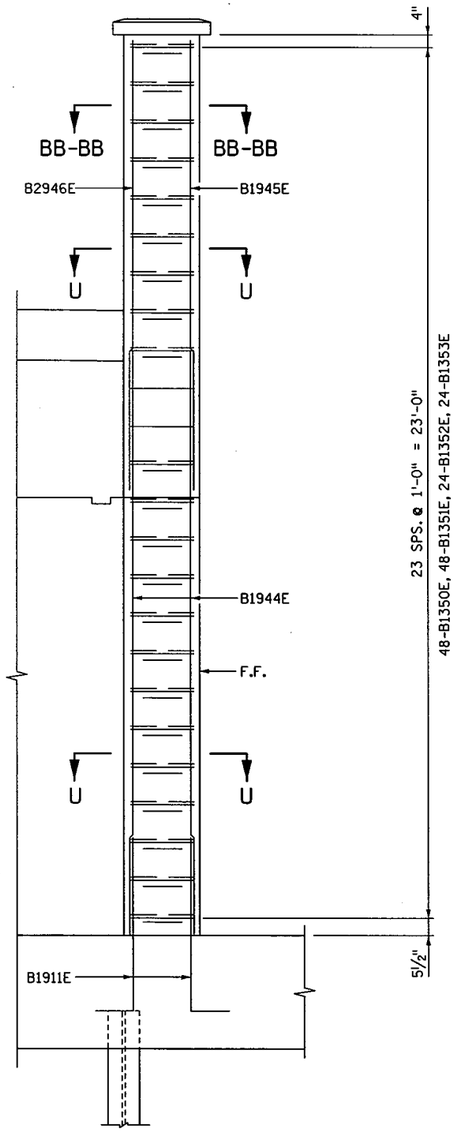

SECTION CC-CC

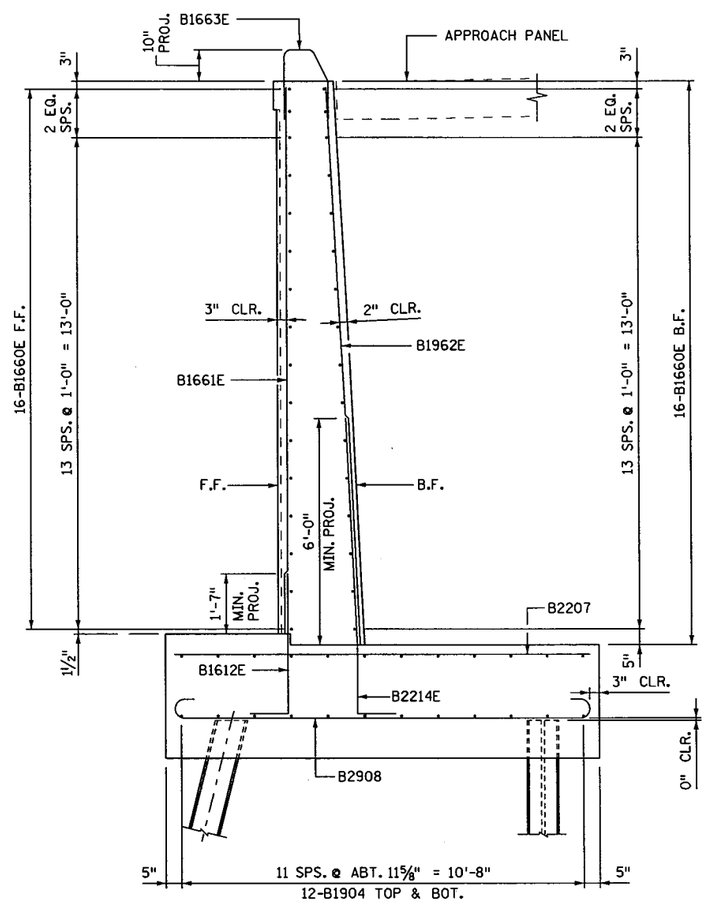

SECTION V-V

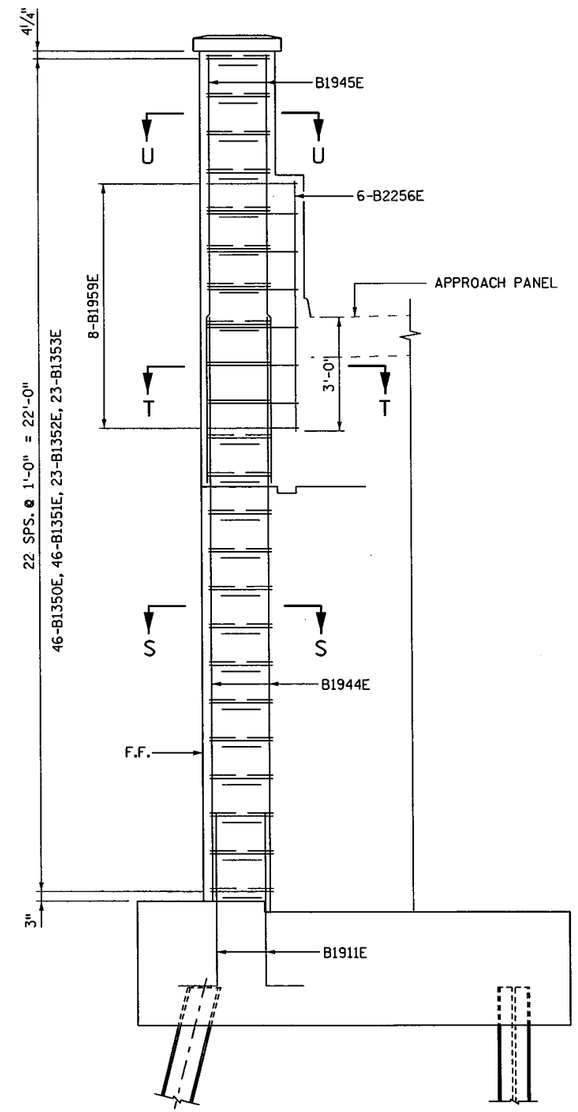

SECTION R-R

CERTIFIED BY Todd R. Stevens 7/9/12 (LICENSED PROFESSIONAL ENGINEER, DATE) NAME: TODD R. STEVENS LIC. NO. 21312	TITLE: NORTH ABUTMENT REINFORCEMENT	DES: GBB	DR: RLV	APPROVED: 7-9-12	BRIDGE NO. 19036
		CHK: PDG	CHK: TRS	SHEET NO. 46 OF 91 SHEETS	

S.P. NO. 1901-148 (T.H. 13=117), S.P. NO. 019-605-028, S.P. NO. 179-020-031

FILENAME: IP_PWP:d1453300\bri9036_abt.dgn
TIME : 8:03:43 AM
PLOTTED : 09-JUL-2012
PATH & FILENAME: Bridge/Final_Design/1/19036/Cadd-Plan/bri9036_abt.dgn

NOTES:

F.F. DENOTES FRONT FACE.

B.F. DENOTES BACK FACE.

SEE SHEET 41 AND 42 FOR LOCATIONS OF SECTIONS.

(1) PULL UP TO 2" CLR.

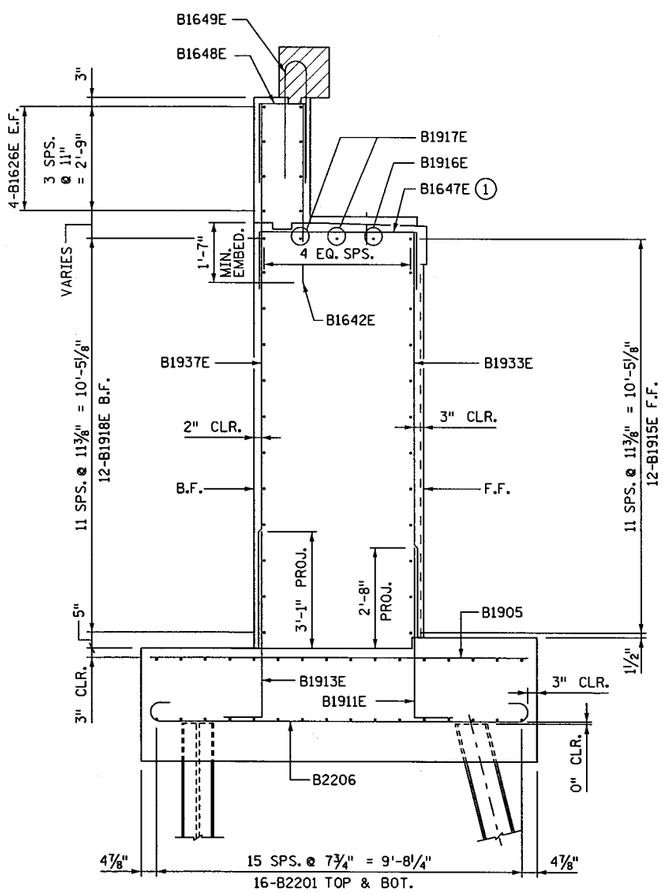

SECTION L-L

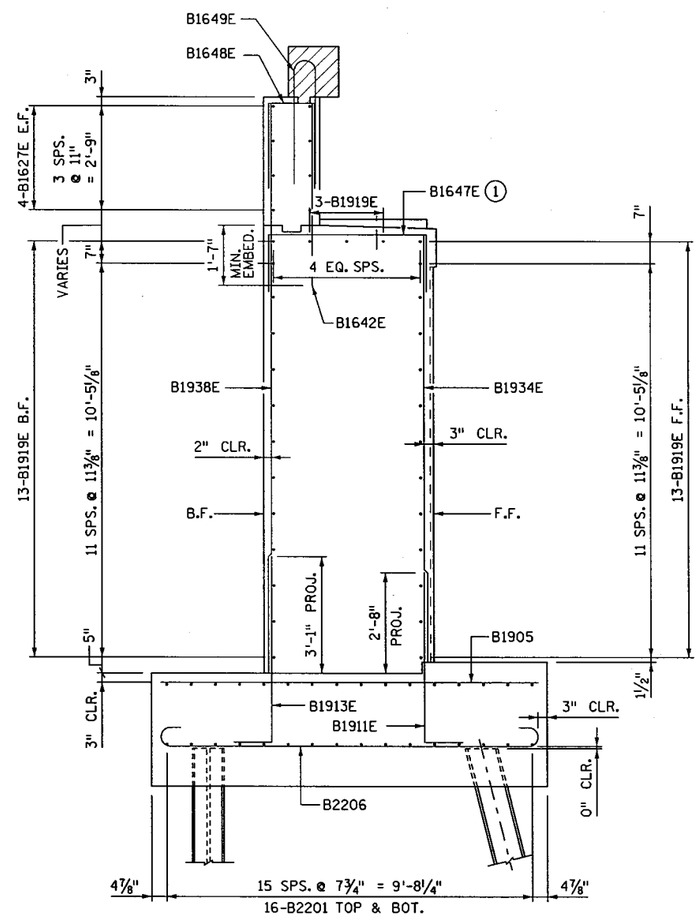

SECTION M-M

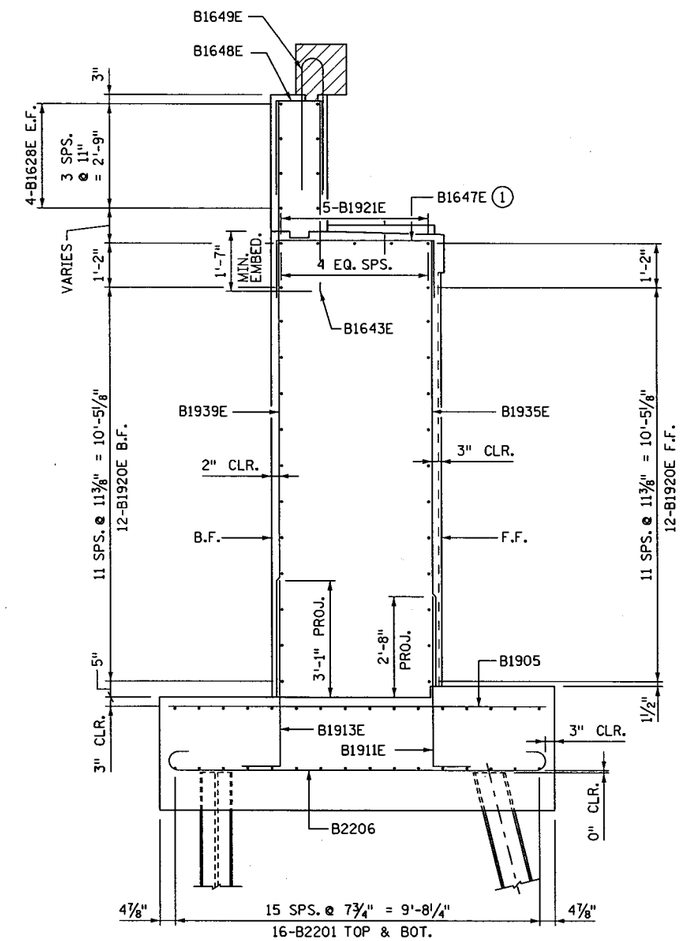

SECTION N-N

S.P. NO. 1901-148 (T.H. 13=117), S.P. NO. 019-605-028, S.P. NO. 179-020-031

CERTIFIED BY Todd R. Stevens 7/9/12
LICENSED PROFESSIONAL ENGINEER DATE
NAME: TODD R. STEVENS LIC. NO. 21312

TITLE: NORTH ABUTMENT REINFORCEMENT

DES: GBB	DR: RLV	APPROVED: 7-9-12
CHK: PDG	CHK: TRS	

SHEET NO. 47 OF 91 SHEETS

BRIDGE NO. 19036

TIME : 10:41:24 AM
PLOTTED : 06-JUL-2012
PATH & FILENAME: Bridge/Final_Design/1/19036/Cadd-Plan/br19036_abt.dgn
FILENAME: IP_PWP:d1453300\br19036_abt.dgn

NOTES:

F.F. DENOTES FRONT FACE.

B.F. DENOTES BACK FACE.

SEE SHEET NO.S 41 AND 42 FOR LOCATIONS OF SECTIONS .

(1) PULL UP TO 2" CLR.

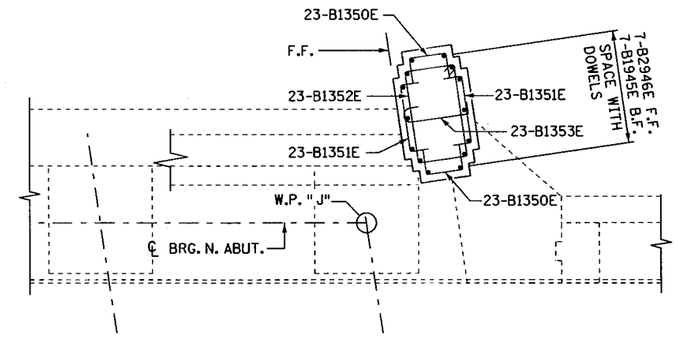

SECTION BB-BB

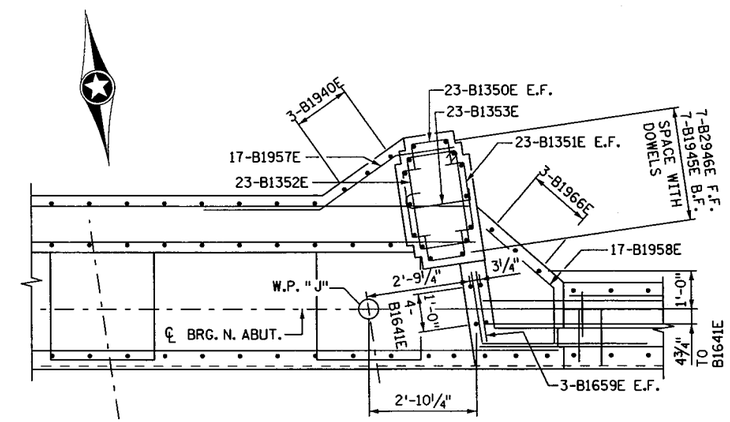

SECTION AA-AA

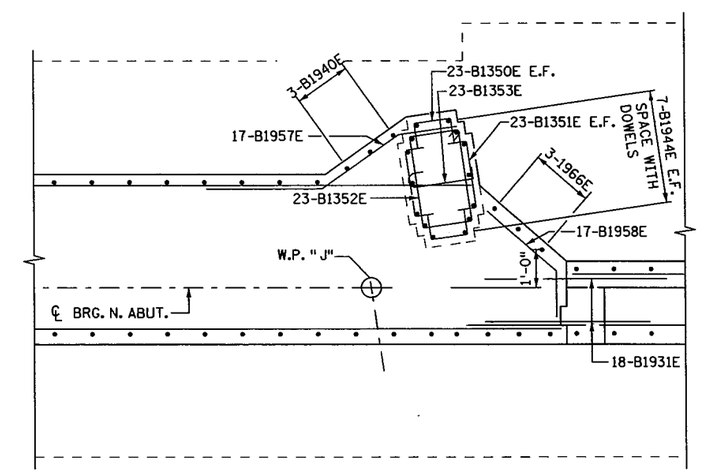

SECTION Z-Z

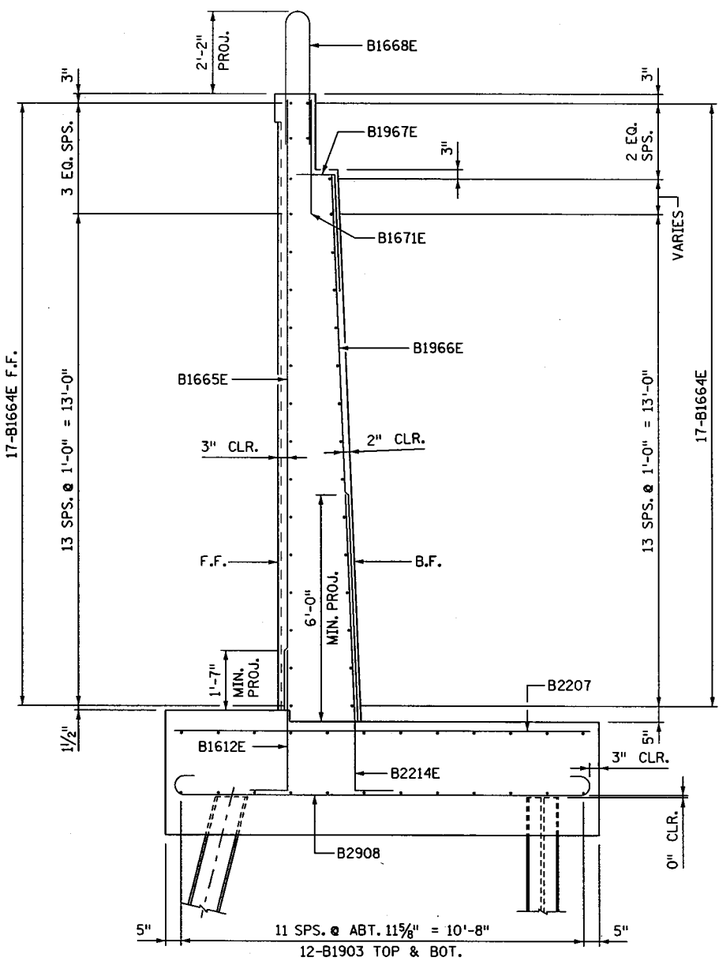

SECTION Q-Q

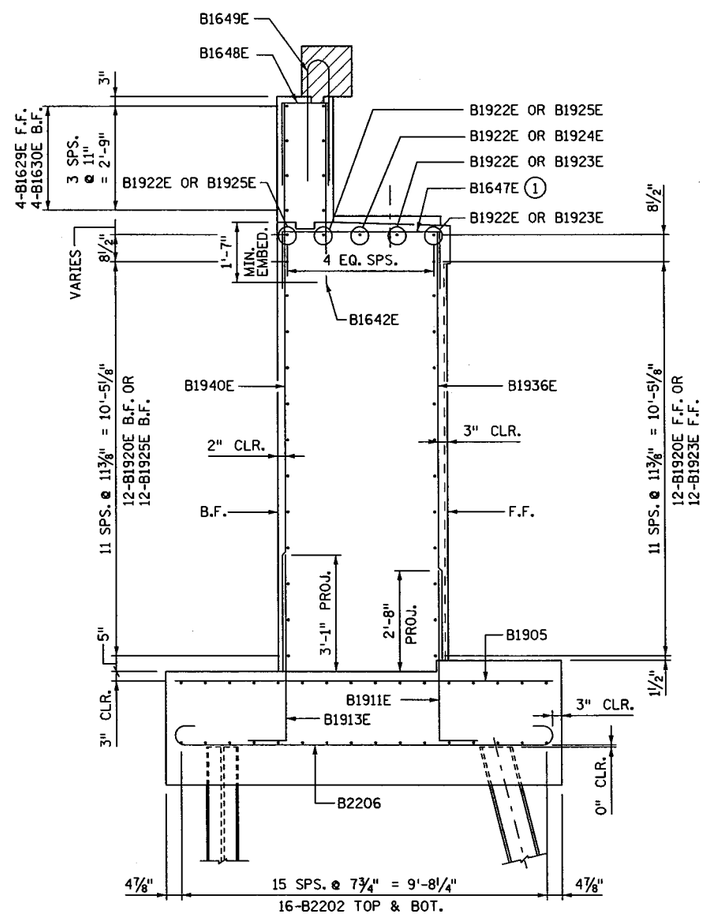

SECTION P-P

S.P. NO. 1901-148 (T.H. 13=117), S.P. NO. 019-605-028, S.P. NO. 179-020-031

CERTIFIED BY Todd R. Stevens 7/9/12
LICENSED PROFESSIONAL ENGINEER DATE
NAME: TODD R. STEVENS LIC. NO. 21312

TITLE: NORTH ABUTMENT REINFORCEMENT

DES: GBB	DR: RLV	APPROVED: 7-9-12
CHK: PDG	CHK: TRS	

SHEET NO. 48 OF 91 SHEETS

BRIDGE NO. 19036

TIME : 11:08:03 AM
PLOTTED : 09-JUL-2012
PATH & FILENAME: Bridge/Final_Design/1/19036/Cadd-Plan/br19036_abt.dgn
FILENAME: IP_PWP:d1453300\br19036_abt.dgn

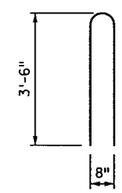

B1668E

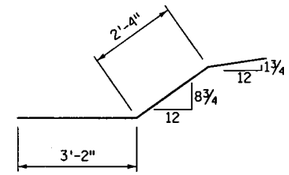

B1957E

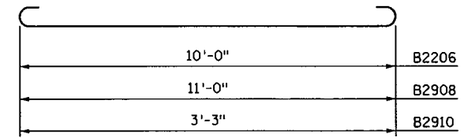

B2206, B2908, B2910

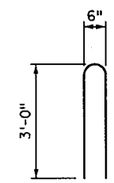

B1649E

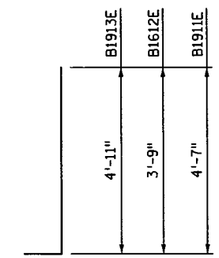

B1911E, B1612E, B1913E

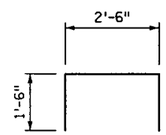

B1370

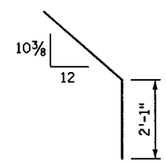

B1958E

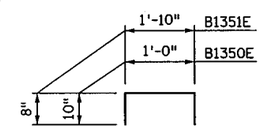

B1350E, B1351E

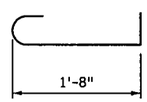

B1353E

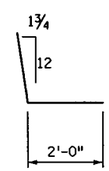

B1954E

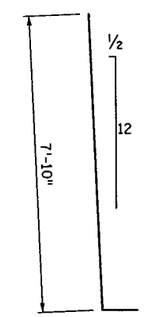

B2214E

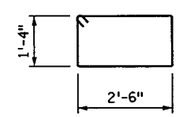

B1352E

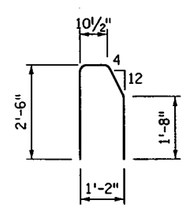

B1663E

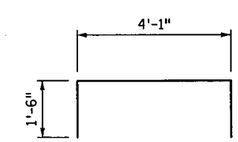

B1647E

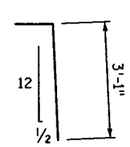

B1967E

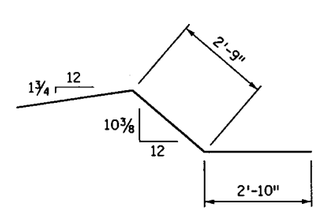

B1955E

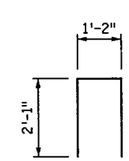

B1648E

BILL OF REINFORCEMENT FOR NORTH ABUTMENT

BAR	NO.	LENGTH	SHAPE	LOCATION
B2201	64	50'-0"		FOOTING LONGITUDINAL T&B
B2202	32	32'-9"		FOOTING LONGITUDINAL T&B
B1903	24	30'-10"		FOOTING LONGITUDINAL T&B
B1904	24	22'-0"		FOOTING LONGITUDINAL T&B
B1905	119	10'-0"		FOOTING TRANSVERSE TOP
B2206	119	11'-8"		FOOTING TRANSVERSE BOT.
B2207	62	11'-0"		FOOTING TRANSVERSE TOP
B2908	62	13'-6"		FOOTING TRANSVERSE BOT.
B2209	1	3'-3"		FOOTING TRANSVERSE TOP
B2910	1	5'-9"		FOOTING TRANSVERSE BOT.
B1911E	151	5'-7"		FOOTING DOWEL F.F.
B1612E	48	4'-7"		WINGWALL FOOTING DOWEL F.F.
B1913E	120	5'-11"		FOOTING DOWEL B.F.
B2214E	94	9'-0"		WINGWALL FOOTING DWL. B.F.
B1915E	12	22'-0"		BRIDGE SEAT HORIZONTAL
B1916E	1	22'-2"		BRIDGE SEAT HORIZONTAL
B1917E	2	22'-4"		BRIDGE SEAT HORIZONTAL
B1918E	12	24'-0"		BRIDGE SEAT HORIZONTAL
B1919E	29	29'-8"		BRIDGE SEAT HORIZONTAL
B1920E	24	33'-11"		BRIDGE SEAT HORIZONTAL
B1921E	5	19'-3"		BRIDGE SEAT HORIZONTAL
B1922E	5	17'-2"		BRIDGE SEAT HORIZONTAL
B1923E	14	31'-6"		BRIDGE SEAT HORIZONTAL
B1924E	1	30'-8"		BRIDGE SEAT HORIZONTAL
B1925E	14	27'-3"		BRIDGE SEAT HORIZONTAL
B1626E	8	23'-10"		PARAPET HORIZONTAL
B1627E	8	29'-8"		PARAPET HORIZONTAL
B1628E	8	33'-11"		PARAPET HORIZONTAL
B1629E	4	29'-0"		PARAPET HORIZONTAL
B1630E	4	29'-0"		PARAPET HORIZONTAL
B1931E	76	5'-8"		BRIDGE SEAT CONST. JT. DWL.
B1632E	24	5'-8"		PARAPET CONST. JT. DWL.
B1933E	27	10'-6"		BRIDGE SEAT VERTICAL F.F.
B1934E	30	11'-2"		BRIDGE SEAT VERTICAL F.F.
B1935E	19	11'-8"		BRIDGE SEAT VERTICAL F.F.
B1936E	47	11'-3"		BRIDGE SEAT VERTICAL F.F.
B1937E	24	14'-2"		BRIDGE SEAT VERTICAL B.F.
B1938E	30	14'-8"		BRIDGE SEAT VERTICAL B.F.
B1939E	34	15'-2"		BRIDGE SEAT VERTICAL B.F.
B1940E	29	14'-11"		BRIDGE SEAT VERTICAL B.F.
B1641E	10	6'-6"		BRIDGE SEAT VERTICAL
B1642E	79	5'-6"		PARAPET VERTICAL F.F.
B1643E	34	5'-3"		PARAPET VERTICAL F.F.
B1944E	28	17'-0"		PILASTER VERTICAL
B1945E	21	11'-2"		PILASTER VERTICAL
B2946E	7	11'-2"		PILASTER VERTICAL
B1647E	113	7'-1"		BRIDGE SEAT TIE
B1648E	111	5'-4"		PARAPET TIE
B1649E	111	6'-3"		END BLOCK TIE
B1350E	94	2'-8"		PILASTER TIE
B1351E	94	3'-2"		PILASTER TIE
B1352E	47	8'-5"		PILASTER TIE
B1353E	47	2'-5"		PILASTER TIE
B1954E	16	5'-4"		BRIDGE SEAT TIE
B1955E	16	7'-8"		BRIDGE SEAT TIE
B2256E	6	6'-0"		PILASTER VERTICAL
B1957E	17	7'-1"		PILASTER TIE
B1958E	17	5'-6"		BRIDGE SEAT TIE
B1659E	14	3'-8"		MASKWALL HORIZONTAL
B1660E	32	18'-5"		WEST WINGWALL HORIZONTAL
B1661E	19	14'-3"		WEST WINGWALL VERTICAL F.F.
B1962E	19	14'-7"		WEST WINGWALL VERTICAL B.F.
B1663E	25	5'-11"		WEST WINGWALL BARRIER TIE
B1664E	32	14'-0"		EAST WINGWALL HORIZONTAL
B1665E	29	16'-0"		EAST WINGWALL VERTICAL F.F.
B1966E	32	14'-0"		EAST WINGWALL VERTICAL B.F.
B1967E	29	4'-1"		EAST WINGWALL TIE
B1668E	42	7'-4"		EAST WINGWALL BARRIER TIE
B1369E	80	2'-6"		PEDESTAL HORIZONTAL
B1370E	80	5'-6"		PEDESTAL TIE
B1671E	32	5'-8"		EAST WINGWALL TIES

CERTIFIED BY Todd R. Stevens 7/9/12
LICENSED PROFESSIONAL ENGINEER DATE
NAME: TODD R. STEVENS LIC. NO. 21312

TITLE: NORTH ABUTMENT REINFORCEMENT

DES: GBB DR: RLV APPROVED: 7-9-12
CHK: PDG CHK: TRS

SHEET NO. 49 OF 91 SHEETS

BRIDGE NO. 19036

S.P. NO. 1901-148 (T.H. 13=117), S.P. NO. 019-605-028, S.P. NO. 179-020-031

FILENAME: IP_PWP-d1453300\br19036_abt.dgn
TIME : 10:47:44 AM
PLOTTED : 09-JUL-2012
PATH & FILENAME: Bridge/Final_Design/1/19036/Cadd-Plan/br19036_abt.dgn

PIER REQUIRED PILE ULTIMATE BEARING CAPACITY Q_{drive} - TONS/PILE		
FIELD CONTROL METHOD	φ_{drive}	✳ Q_{drive}
MN/DOT ULTIMATE FORMULA	0.40	334.8
PDA	0.65	206.0

✳ Q_{drive} = (PILE BEARING RESISTANCE) / φ_{drive}

PIER COMPUTED PILE LOAD - TONS/PILE	
FACTORED DEAD LOAD	86.3
FACTORED LIVE LOAD	37.3
FACTORED OVERTURNING	10.3
✳ FACTORED DESIGN LOAD	133.9

✳ BASED ON STRENGTH 1 LOAD COMBINATION

PILE NOTES

3 STEEL H TEST PILES 45 FT. LONG
22 STEEL H PILES EST. LENGTH 35 FT.
25 STEEL H PILES REQ'D FOR PIER.

PILE SPACING SHOWN IS AT BOTTOM OF FOOTING.

PILES MARKED THUS H— TO BE BATTERED 2" PER FOOT IN DIRECTION SHOWN.

ALL PILES TO BE HP12X53.

FOR PILE SPLICE DETAILS SEE DETAIL B202.

SUMMARY OF QUANTITIES FOR PIER	
STRUCTURAL CONCRETE (1A43)	120 CU. YD.
STRUCTURAL CONCRETE (3Y43)	198 CU. YD.
REINFORCEMENT BARS	7790 POUND
REINFORCEMENT BARS (EPOXY COATED)	38060 POUND
(1) STEEL H-PILING DELIVERED 12"	770 LIN. FT.
(1) STEEL H-PILING DRIVEN 12"	770 LIN. FT.
STEEL H-TEST PILE 45 FT LONG 12"	3 EACH

(1) DOES NOT INCLUDE TEST PILE

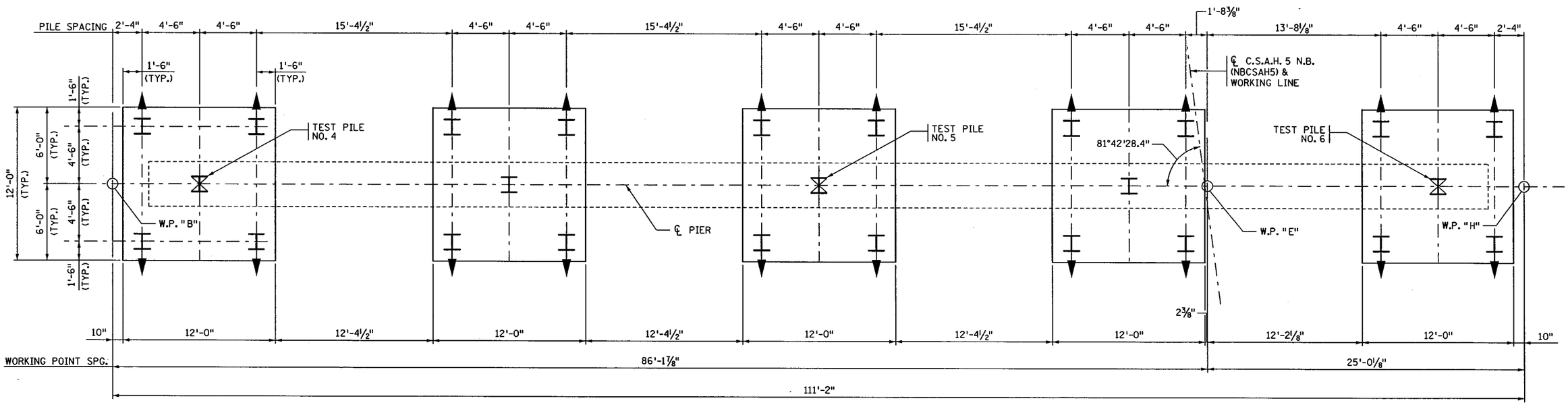

PIER FOOTING PLAN

FILENAME: IP_PWP-d1453300V9036.dgn

TIME : 7:34:54 AM
PLOTTED : 09-JUL-2012
PATH & FILENAME: Bridge/Final_Design/1/19036/Cadd-Plan/19036.dgn

S.P. NO. 1901-148 (T.H. 13=117), S.P. NO. 019-605-028, S.P. NO. 179-020-031

CERTIFIED BY Todd R. Stevens 7/9/12
LICENSED PROFESSIONAL ENGINEER DATE
NAME: TODD R. STEVENS LIC. NO. 21312

TITLE: PIER DETAILS

DES: P.D.G. DR: N.A. APPROVED: 7-9-12
CHK: G.B.B. CHK: T.R.S.
SHEET NO. 50 OF 91 SHEETS

BRIDGE NO. 19036

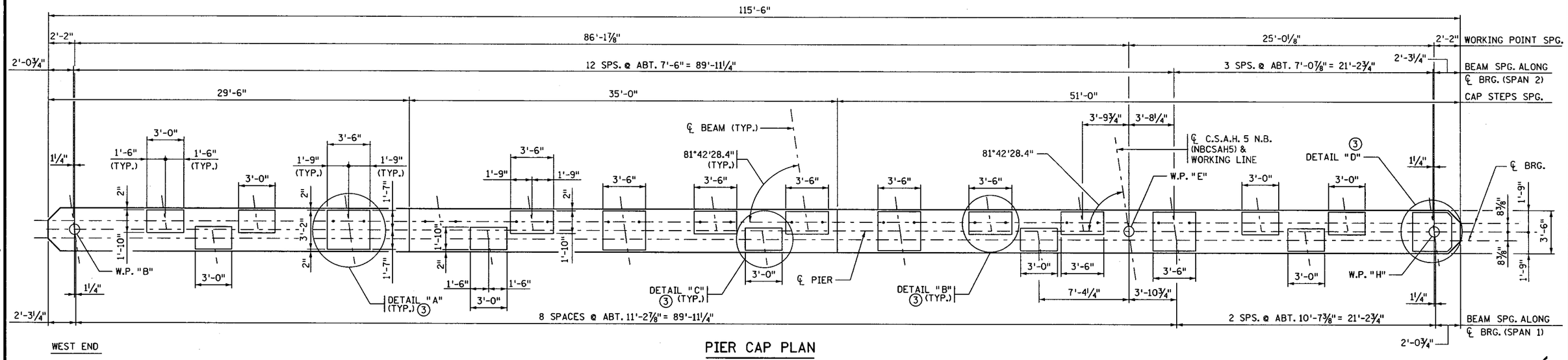

PIER CAP PLAN

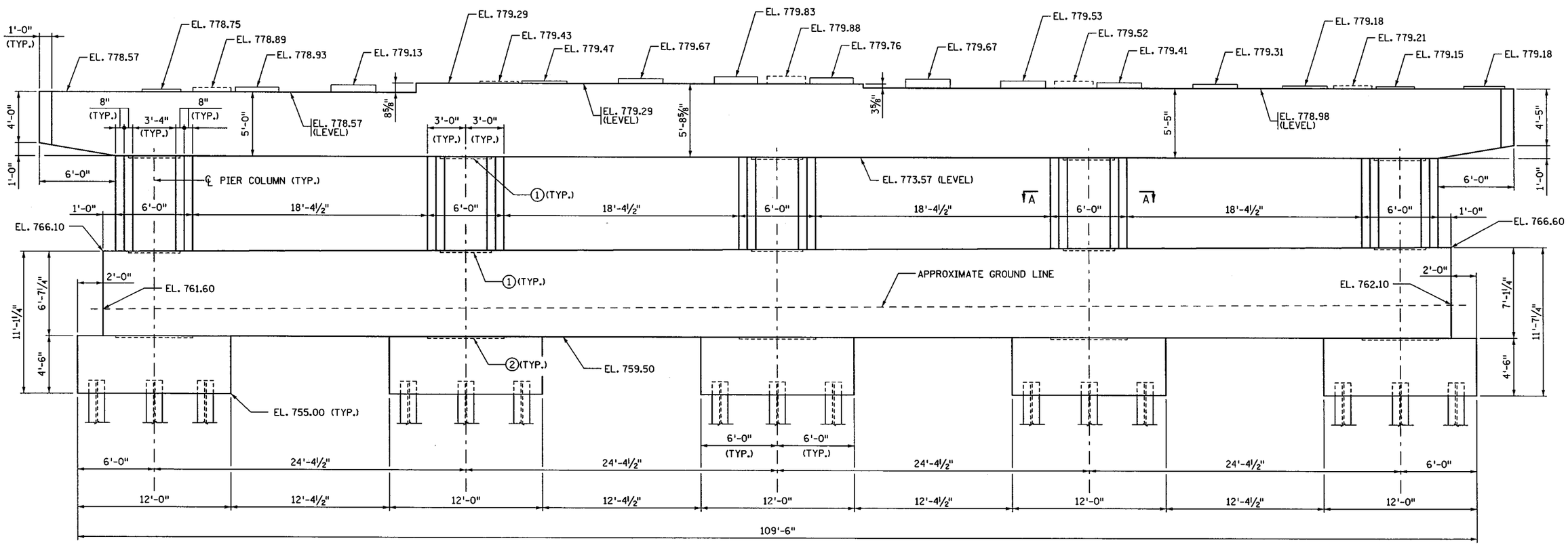

PIER ELEVATION

NOTES:

SEE SHEET 54 FOR SECTION A-A.

① CONSTRUCTION JOINT W/ 2" X 12" X 1'-4" KEYWAY.

② CONSTRUCTION JOINT W/ 2" X 12" X 6'-0" KEYWAY.

③ SEE SHEET 54 FOR DETAILS "A","B","C" & "D".

S.P. NO. 1901-148 (T.H. 13=117), S.P. NO. 019-605-028, S.P. NO. 179-020-031

CERTIFIED BY Todd R. Stevens 7/9/12 (LICENSED PROFESSIONAL ENGINEER / DATE) NAME: TODD R. STEVENS LIC. NO. 21312	TITLE: PIER DETAILS	DES: P.D.G. CHK: G.B.B.	DR: N.A. CHK: T.R.S.	APPROVED: 7-9-12
		SHEET NO. 51 OF 91 SHEETS		BRIDGE NO. 19036

FILENAME: IP_PWP:d1453300\9036.dgn

TIME : 7:35:23 AM
PLOTTED : 09-JUL-2012
PATH & FILENAME: Bridge/Final_Design/1/19036/Cadd-Plan/19036.dgn

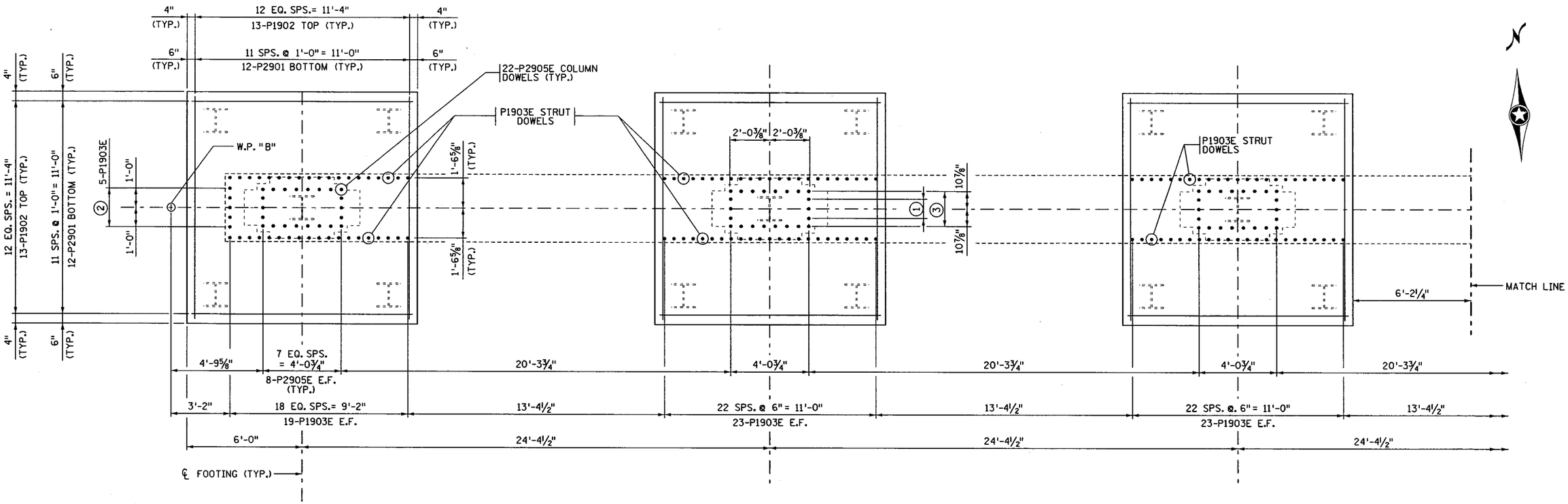

NOTES:

E.F. DENOTES EACH FACE.

1. 3-P2905E E.F. (COLUMN DOWELS). (TYP.)
2. 4 SPS. @ 6" = 2'-0", 5-P1903E OR 5-P1904E (STRUT DOWELS).
3. 4 EQ. SPS.= 1'-9¾" (TYP.)

CERTIFIED BY Todd R. Stevens 7/9/12
LICENSED PROFESSIONAL ENGINEER DATE
NAME: TODD R. STEVENS LIC. NO. 21312

TITLE: PIER REINFORCEMENT

DES:	P.D.G.	DR:	N.A.	APPROVED: 7-9-12
CHK:	G.B.B.	CHK:	T.R.S.	

SHEET NO. 52 OF 91 SHEETS

BRIDGE NO. 19036

S.P. NO. 1901-148 (T.H. 13=117), S.P. NO. 019-605-028, S.P. NO. 179-020-031

FILENAME: IP_PWP:d1453300\9036.dgn
TIME : 7:35:45 AM
PLOTTED : 09-JUL-2012
PATH & FILENAME: Bridge/Final_Design/1/19036/Cadd-Plan/19036.dgn

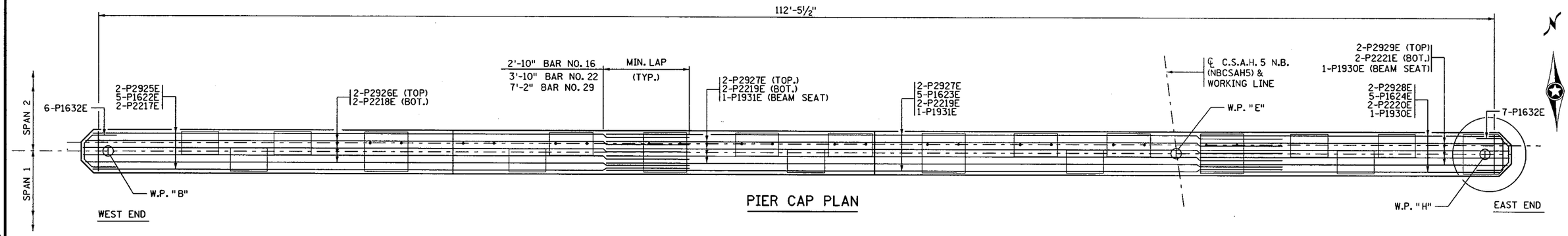

PIER CAP PLAN

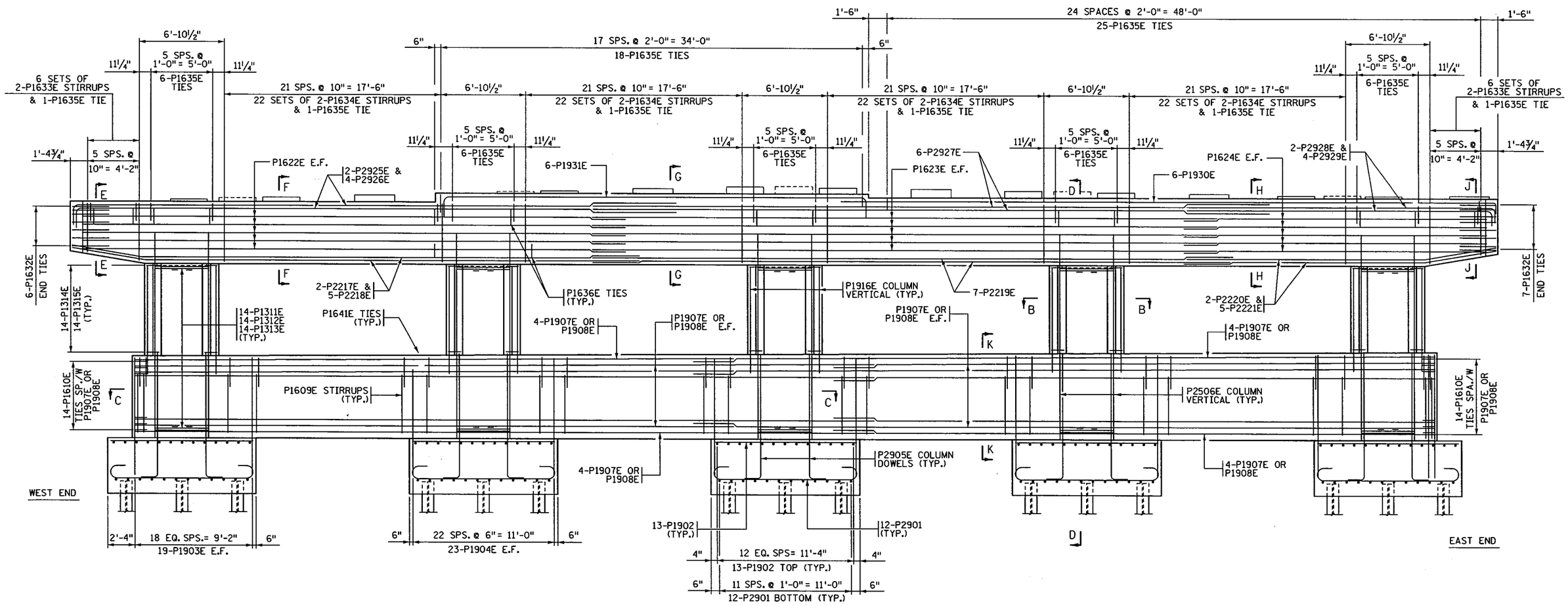

PIER ELEVATION

NOTES:

E.F. DENOTES EACH FACE.
SEE SHEET 54 FOR SECTION B-B & C-C.
SEE SHEET 55 FOR SECTIONS D-D & K-K.
SEE SHEET 56 FOR SECTIONS E-E, F-F, G-G, H-H & J-J.

CERTIFIED BY Todd R. Stevens 7/9/12 (LICENSED PROFESSIONAL ENGINEER, DATE) NAME: TODD R. STEVENS LIC. NO. 21312	TITLE: PIER REINFORCEMENT	DES: P.D.G. CHK: G.B.B.	DR: N.A. CHK: T.R.S.	APPROVED: 7-9-12	BRIDGE NO. 19036
S.P. NO. 1901-148 (T.H. 13=117), S.P. NO. 019-605-028, S.P. NO. 179-020-031		SHEET NO. 53 OF 91 SHEETS			

FILENAME: IP_PWP.dl453300\9036.dgn
TIME : 7:36:07 AM
PLOTTED : 09-JUL-2012
PATH & FILENAME: Bridge/Final_Design/1/19036/Cadd-Plan/19036.dgn

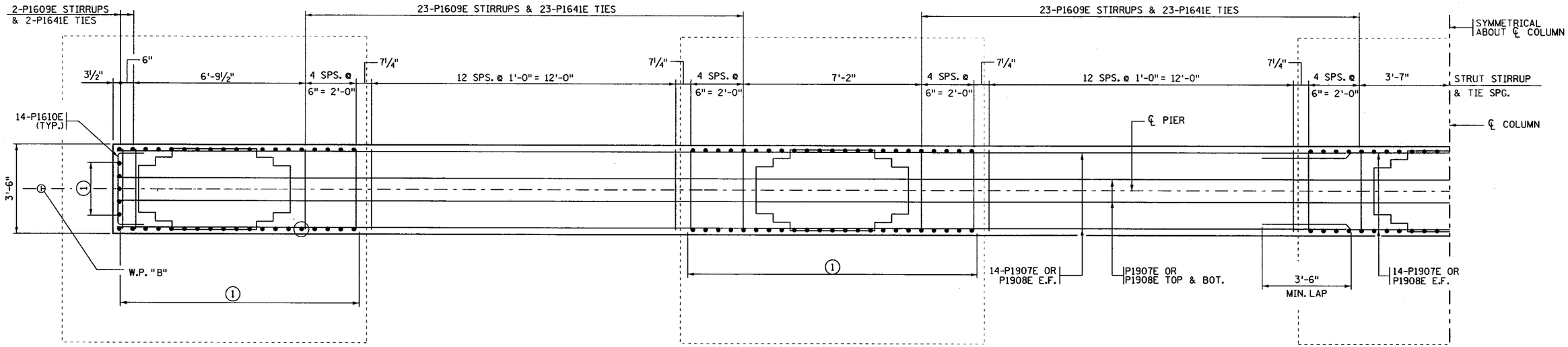

SECTION C-C

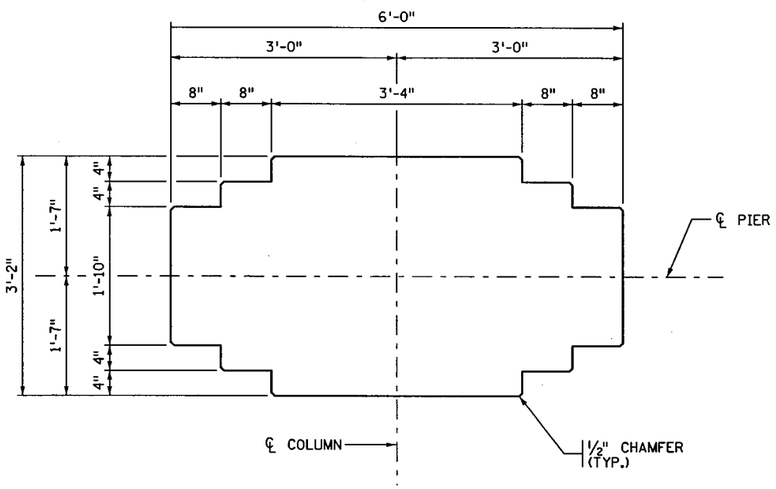

SECTION A-A

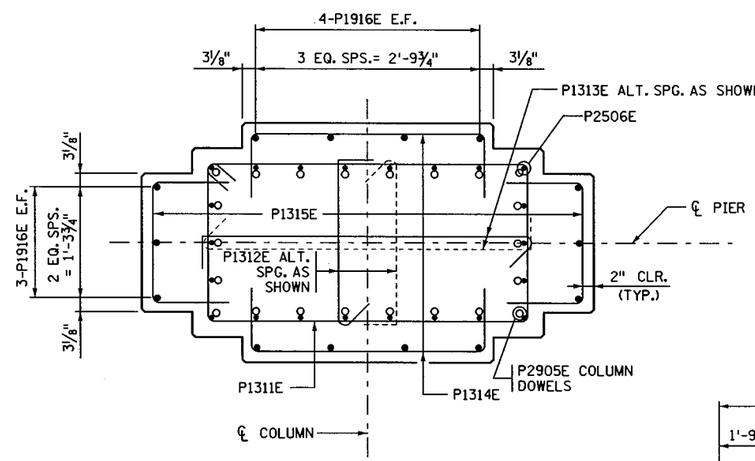

SECTION B-B

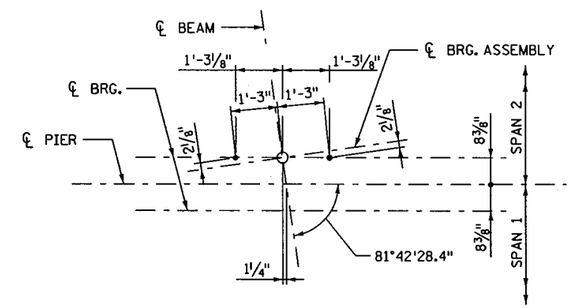

ANCHOR ROD LAYOUT

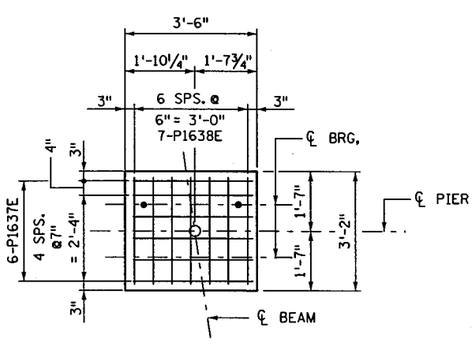

DETAIL "A"

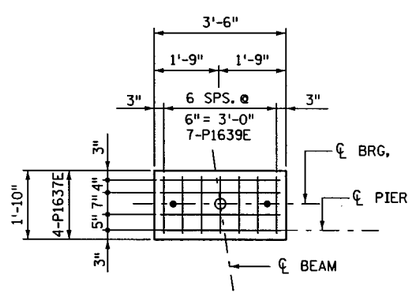

DETAIL "B"

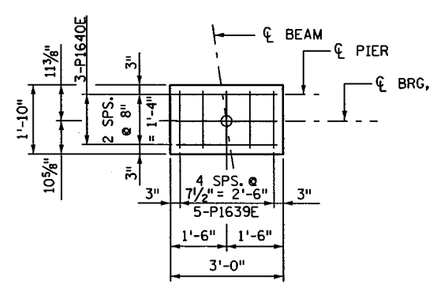

DETAIL "C"

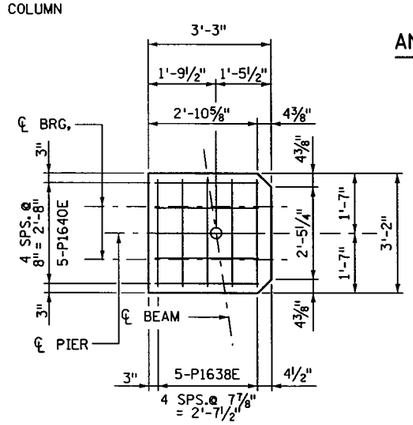

DETAIL "D"

NOTES:

E.F. DENOTES EACH FACE

SEE SHEET 50 FOR LOCATION OF SECTION A-A.

SEE SHEET 53 FOR LOCATION OF SECTION B-B AND C-C.

(1) SEE SHEET 52 FOR PIER STRUT DOWELS SPACING.

S.P. NO. 1901-148 (T.H. 13=117), S.P. NO. 019-605-028, S.P. NO. 179-020-031

CERTIFIED BY Todd R. Stevens 7/9/12
LICENSED PROFESSIONAL ENGINEER DATE
NAME: TODD R. STEVENS LIC. NO. 21312

TITLE: PIER DETAIL & REINFORCEMENT

DES: P.D.G.	DR: N.A.	APPROVED: 7-9-12	BRIDGE NO. 19036
CHK: G.B.B.	CHK: T.R.S.	SHEET NO. 54 OF 91 SHEETS	

FILENAME: IP_PWP-d1453300V9036.dgn

TIME : 7:36:25 AM
PLOTTED : 09-JUL-2012
PATH & FILENAME: Bridge/Final_Design/1/19036/Cadd-Plan/19036.dgn

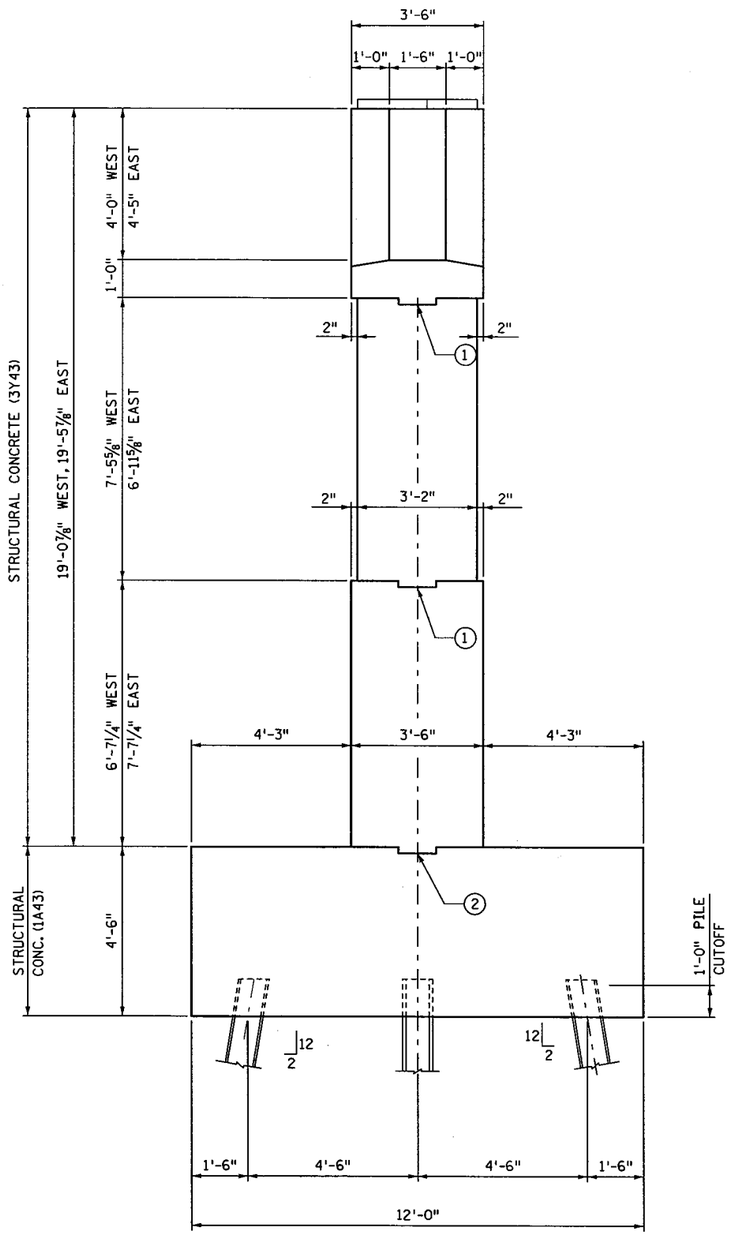

END VIEW

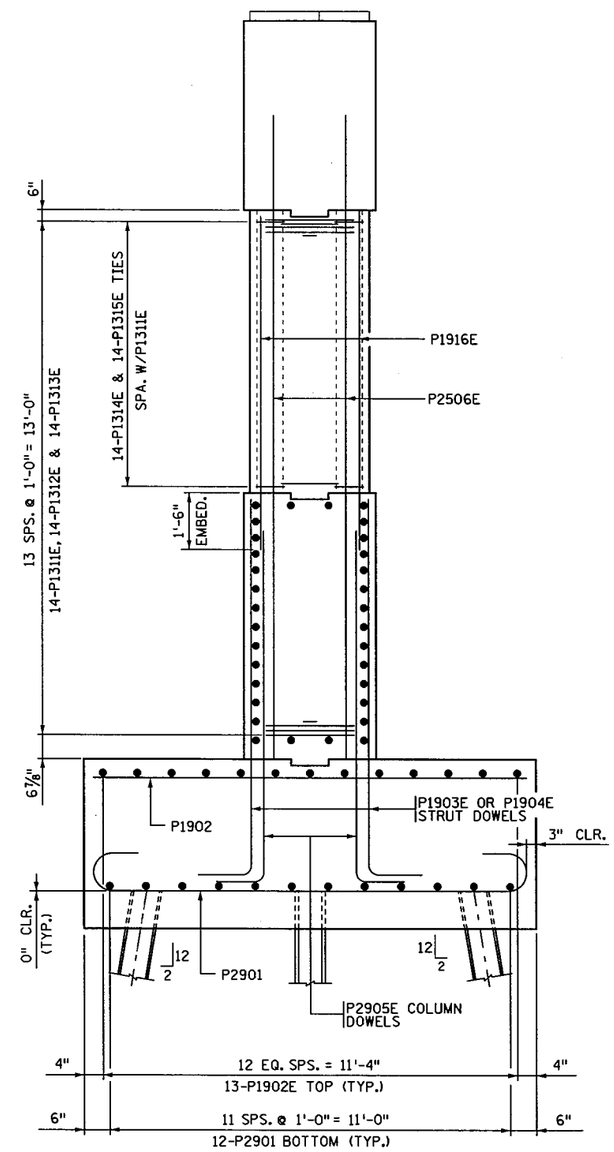

SECTION D-D

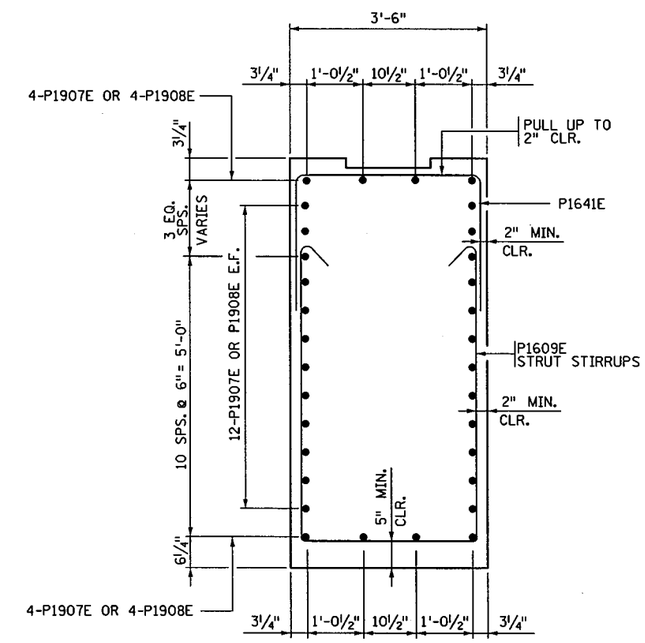

SECTION K-K

NOTES:

E.F. DENOTES EACH FACE.

SEE SHEET 53 FOR LOCATION OF SECTION D-D & K-K.

(1) CONSTRUCTION JOINT W/ 2" X 12" X 1'-4" KEYWAY.

(2) CONSTRUCTION JOINT W/ 2" X 12" X 6'-0" KEYWAY.

FILENAME: IP_PWP:d1453300\19036.dgn

TIME : 7:36:49 AM
PLOTTED : 09-JUL-2012
PATH & FILENAME: Bridge/Final_Design/I/19036/Cadd-Plan/19036.dgn

S.P. NO. 1901-148 (T.H. 13=117), S.P. NO. 019-605-028, S.P. NO. 179-020-031

CERTIFIED BY Todd R. Stevens 7/9/12 LICENSED PROFESSIONAL ENGINEER DATE	TITLE: PIER DETAIL & REINFORCEMENT	DES: P.D.G.	DR: N.A.	APPROVED: 7-9-12	BRIDGE NO. 19036
NAME: TODD R. STEVENS LIC. NO. 21312		CHK: G.B.B.	CHK: T.R.S.		
		SHEET NO. 55 OF 91 SHEETS			

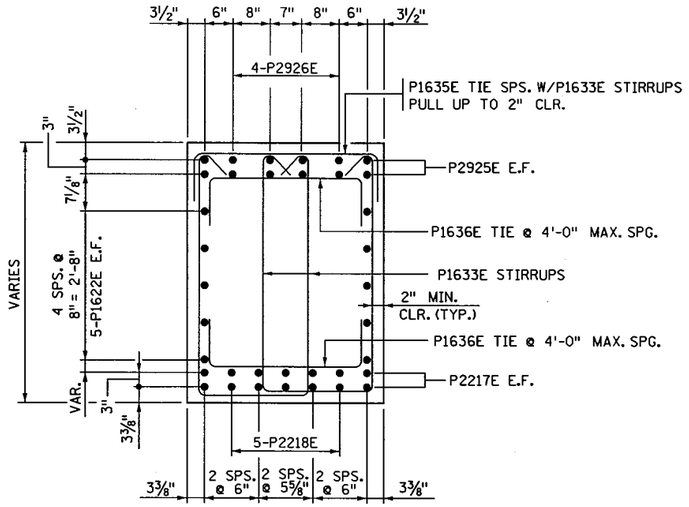

SECTION E-E

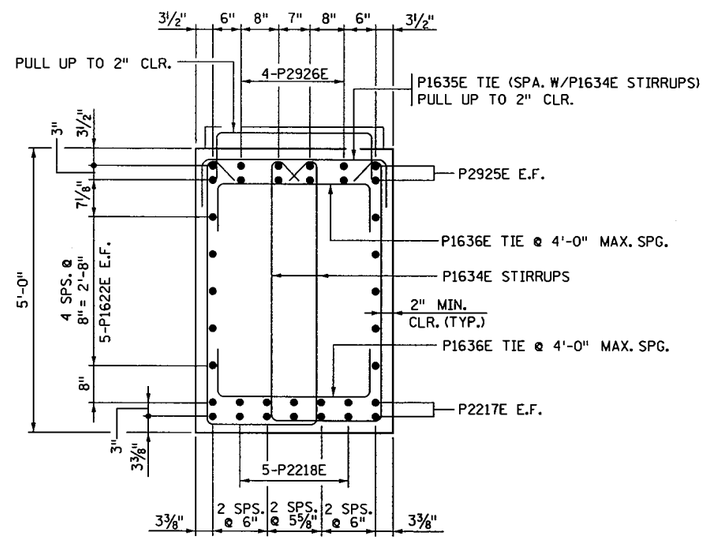

SECTION F-F

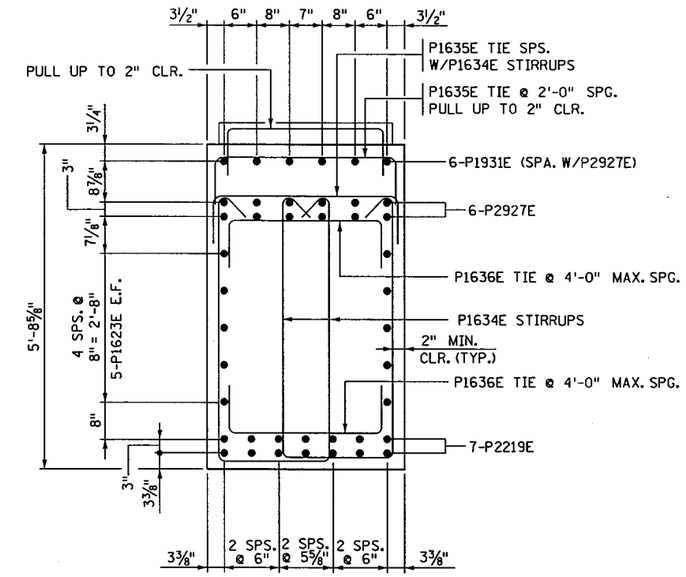

SECTION G-G

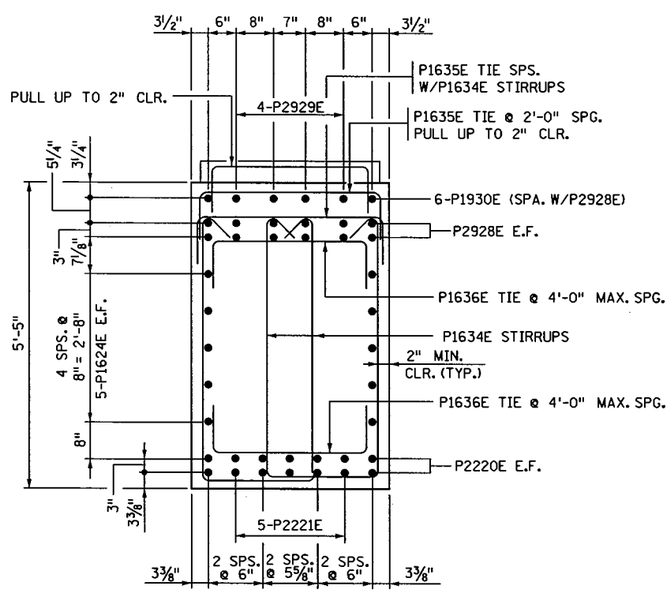

SECTION H-H

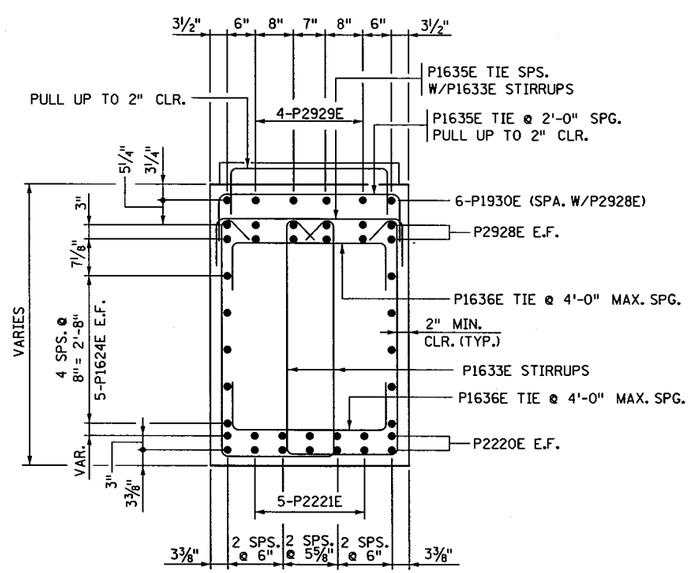

SECTION J-J

NOTES:

E.F. DENOTES EACH FACE.

SEE SHEET 53 FOR SECTION LOCATIONS.

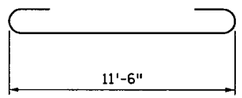

P2901

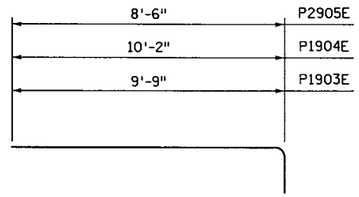

P1903E, P1904E & P2905E

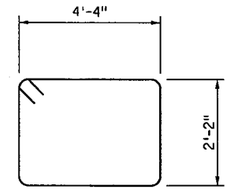

P1311E

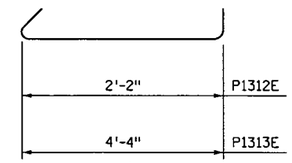

P1312E & P1313E

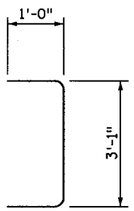

P1610E

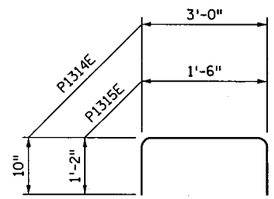

P1314E & P1315E

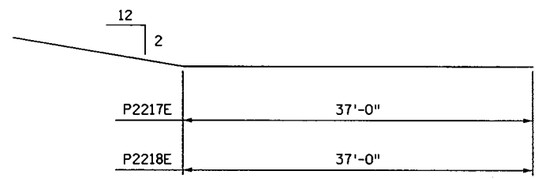

P2217E & P2218E

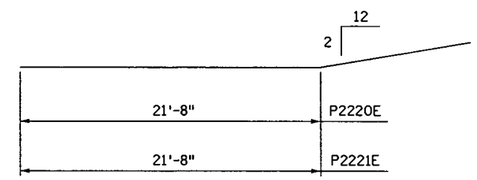

P2220E & P2221E

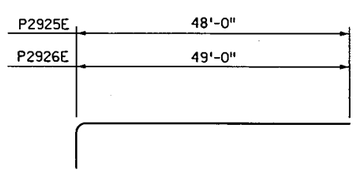

P2925E & P2926E

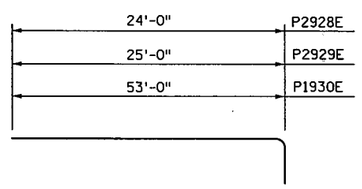

P2928E, P2929E & P1930E

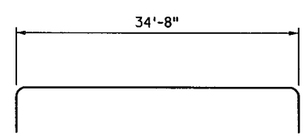

P1931E

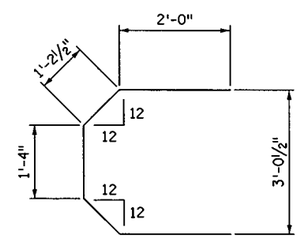

P1632E

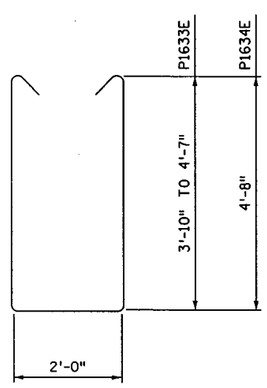

P1633E & P1634E

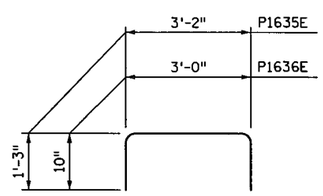

P1635E & P1636E

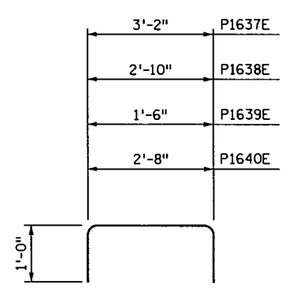

P1637E, P1638E, P1639E & P1640E

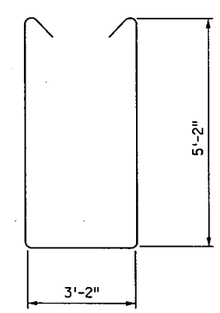

P1609E

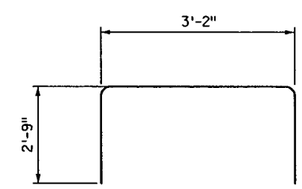

P1641E

BILL OF REINFORCEMENT FOR PIER

BAR	NO.	LENGTH	SHAPE	LOCATION
P2901	120	14'-0"		FOOTING TRANS. BOT.
P1902	130	11'-6"		FOOTING TRANS. TOP
P1903E	135	10'-9"		FOOTING - STRUT DOWEL
P1904E	89	11'-2"		FOOTING - STRUT DOWEL
P2905E	110	10'-1"		FOOTING - COLUMN DOWEL
P2506E	110	17'-1"		COLUMN VERT.
P1907E	32	48'-8"		STRUT HORIZ.
P1908E	32	60'-0"		STRUT HORIZ.
P1609E	96	14'-5"		STRUT STIRRUP
P1610E	28	5'-1"		STRUT END TIES
P1311E	70	13'-9"		COLUMN TIES
P1312E	70	2'-11"		COLUMN TIES
P1313E	70	5'-1"		COLUMN TIES
P1314E	70	4'-8"		COLUMN TIES
P1315E	70	3'-10"		COLUMN TIES
P1916E	70	8'-10"		COLUMN VERT.
P2217E	4	41'-10"		PIER CAP HORIZ.
P2218E	10	42'-10"		PIER CAP HORIZ.
P2219E	14	52'-6"		PIER CAP HORIZ.
P2220E	4	25'-6"		PIER CAP HORIZ.
P2221E	10	27'-6"		PIER CAP HORIZ.
P1622E	10	43'-10"		PIER CAP HORIZ.
P1623E	10	50'-0"		PIER CAP HORIZ.
P1624E	10	27'-0"		PIER CAP HORIZ.
P2925E	4	49'-7"		PIER CAP HORIZ.
P2926E	8	50'-7"		PIER CAP HORIZ.
P2927E	12	55'-6"		PIER CAP HORIZ.
P2928E	4	25'-7"		PIER CAP HORIZ.
P2929E	8	26'-7"		PIER CAP HORIZ.
P1930E	6	54'-0"		PIER CAP HORIZ.
P1931E	6	36'-8"		PIER CAP HORIZ.
P1632E	13	7'-9"		PIER CAP END TIE
P1633E	4 SETS OF 6	10'-7 TO 12'-1"		PIER CAP STIRRUPS
P1634E	176	12'-3"		PIER CAP STIRRUPS
P1635E	143	5'-8"		PIER CAP TIES
P1636E	58	4'-8"		PIER CAP TIES
P1637E	44	5'-2"		PEDESTAL TIES
P1638E	33	4'-10"		PEDESTAL TIES
P1639E	80	3'-6"		PEDESTAL TIES
P1640E	32	4'-8"		PEDESTAL TIES
P1641E	96	8'-8"		STRUT TOP TIES

S.P. NO. 1901-148 (T.H. 13=117), S.P. NO. 019-605-028, S.P. NO. 179-020-031

CERTIFIED BY Todd R. Stevens 7/9/12
LICENSED PROFESSIONAL ENGINEER DATE
NAME: TODD R. STEVENS LIC. NO. 21312

TITLE: PIER DETAILS & REINFORCEMENT

DES: P.D.G.	DR: N.A.	APPROVED: 7-9-12
CHK: G.B.B.	CHK: T.R.S.	

SHEET NO. 57 OF 91 SHEETS

BRIDGE NO. 19036

FILENAME: IP_PWP:d1453300\90036.dgn
TIME : 7:37:25 AM
PLOTTED : 09-JUL-2012
PATH & FILENAME: Bridge/Final_Design/1/19036/Cadd-Plan/19036.dgn

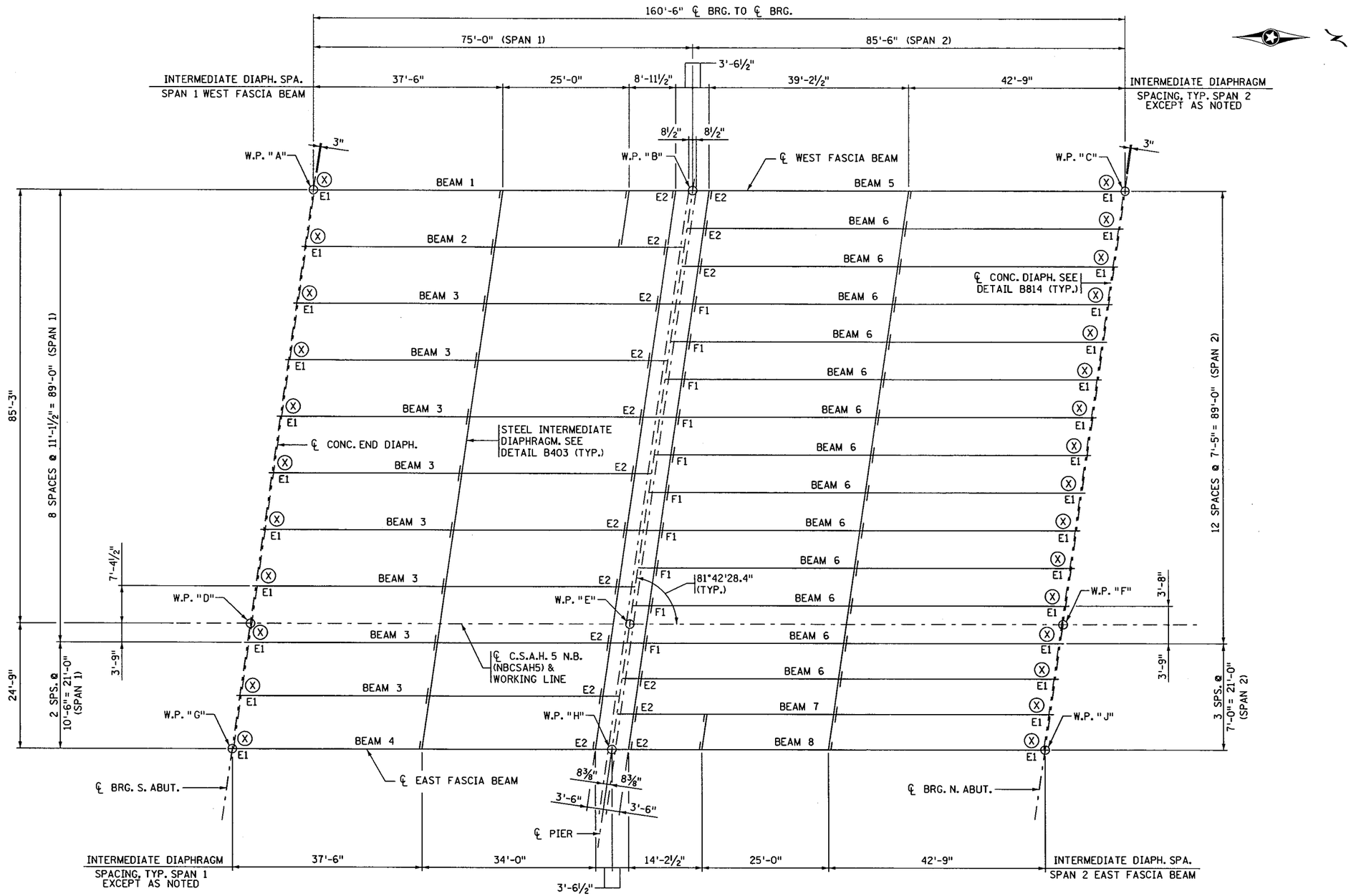

FRAMING PLAN

NOTES:

(E1) EXPANSION CURVED PLATE BEARING ASSEMBLY TYPE E1, SEE DETAIL B311.

(E2) EXPANSION CURVED PLATE BEARING ASSEMBLY TYPE E2, SEE DETAIL B311.

(F1) FIXED CURVED PLATE BEARING ASSEMBLY TYPE F1, SEE DETAIL B310.

(X) "X" DENOTES X END OF BEAM.

FILENAME: IP_PWP:d1453300\19036.dgn

TIME : 7:38:08 AM
PLOTTED : 09-JUL-2012
PATH & FILENAME: Bridge/Final_Design/1/19036/Cadd-Plan/19036.dgn

S.P. NO. 1901-148 (T.H. 13=117), S.P. NO. 019-605-028, S.P. NO. 179-020-031

CERTIFIED BY Todd R. Stevens 7/9/12 LICENSED PROFESSIONAL ENGINEER DATE	TITLE: FRAMING PLAN	DES: P.D.G.	DR: N.A.	APPROVED: 7-9-12	BRIDGE NO. 19036
NAME: TODD R. STEVENS LIC. NO. 21312		CHK: G.B.B.	CHK: T.R.S.		
		SHEET NO. 58 OF 91 SHEETS			

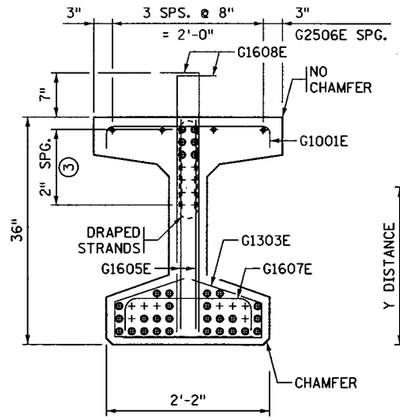

END VIEW

CUT STRANDS FLUSH WITH CONCRETE. PAINT ENDS WITH AN APPROVED GRAY EPOXY EXCEPT AS NOTED.

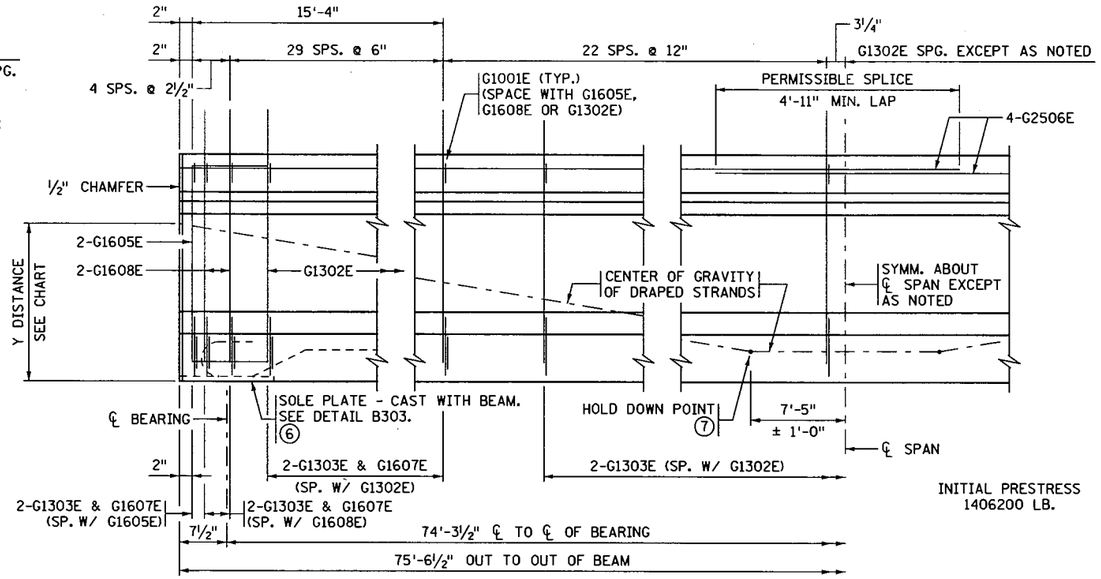

INITIAL PRESTRESS 1406200 LB.

BEAM ELEVATION

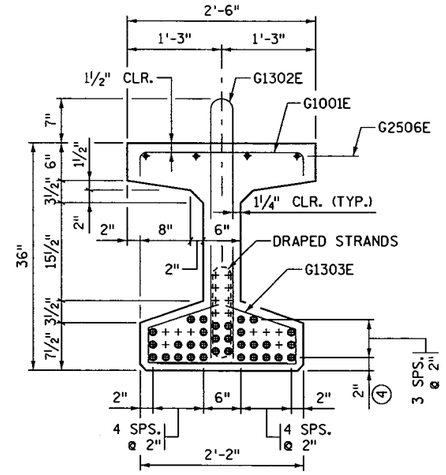

SECTION AT ℄ SPAN

Y DISTANCES (IN INCHES)			
	NO.	℄ SPAN	END
STRAIGHT STRANDS	26	4.15	╳
DRAPED STRANDS	6	5	31 ▫
TOTAL STRANDS	32	4.31	╳

Y = DISTANCE TO CENTER OF GRAVITY OF STRANDS FROM BOTTOM OF BEAM. ALL STRANDS SPACED 2" CENTER TO CENTER, HORIZONTALLY AND VERTICALLY, EXCEPT AS NOTED.

▫ A TOLERANCE OF ± 1" WILL BE PERMITTED IN THIS DIMENSION.

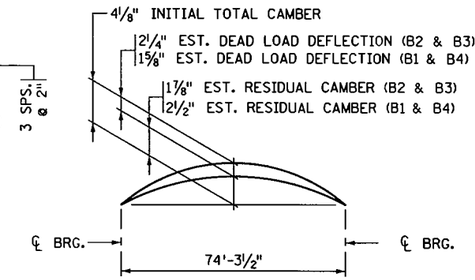

CAMBER DIAGRAM

INITIAL CAMBER IS GIVEN AFTER DIAPHRAGMS ARE IN PLACE.

DEAD LOAD DEFLECTION SHOWN IS FOR WEIGHT OF SLAB, WEARING COURSE, RAILING, SIDEWALK AND MEDIAN WHERE APPLICABLE.

ENGINEER WILL TAKE ELEVATIONS AT TOP OF BEAMS AFTER ERECTION AND WILL ALLOW FOR DEFLECTION SHOWN TO ENABLE CONTRACTOR TO BUILD FORMS TO CORRECT GRADE AND SPECIFIED SLAB THICKNESS.

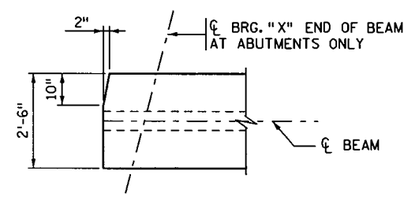

BEAM TOP FLANGE CLIP DETAIL

("X" END OF ALL BEAMS)

CALCULATED PRESTRESS LOSSES	
ELASTIC SHORTENING LOSS	24.641 KSI
LONG TERM LOSSES	23.323 KSI
TOTAL LOSSES	47.964 KSI

MINIMUM CONCRETE STRENGTH - K.S.I.	
① f'cI	② f'c
7.5 KSI	9.0 KSI

PRESTRESSING STRAND DIAMETER	
⑤	½" ☐
⑤	0.60" ☒

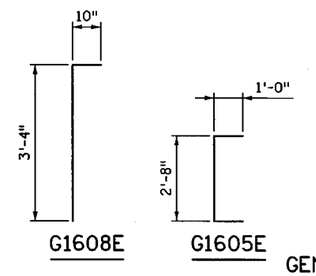

G1608E G1605E

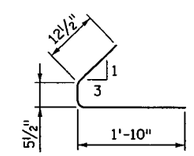

G1303E

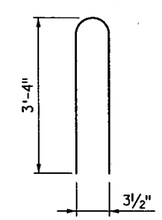

G1302E

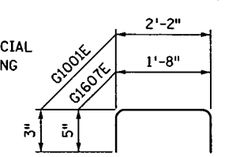

G1001E & G1607E

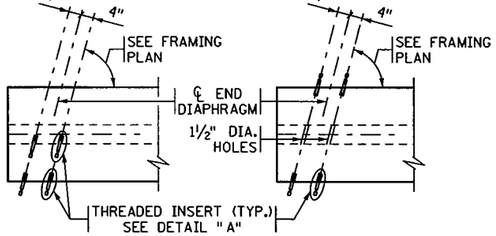

PLAN AT FASCIA BEAMS PLAN AT INTERIOR BEAMS

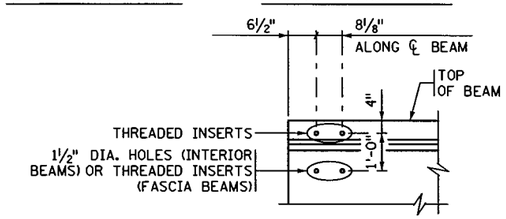

ELEVATION

CONCRETE END DIAPHRAGM

PARAPET ABUTMENT
(SEE DETAIL B814 FOR DIAPHRAGM DETAILS)

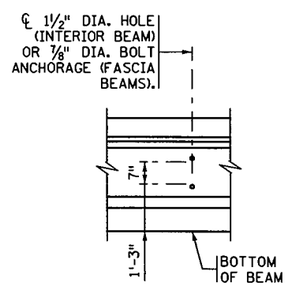

ELEVATION

STEEL INTERMEDIATE DIAPHRAGM

(SEE FRAMING PLAN FOR LOCATION ANDDETAIL B403 FOR DIAPHRAGM DETAILS)

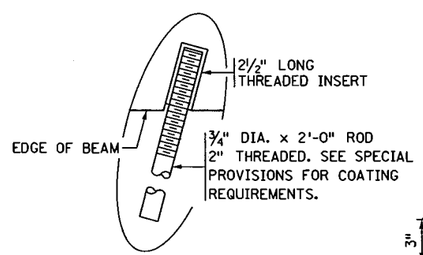

DETAIL "A"

GENERAL NOTES

TOPS OF BEAMS SHALL BE ROUGH FLOATED AND BROOMED TRANSVERSELY FOR BOND.

PROVIDE HANDLING HOOKS OR DEVICES AS REQUIRED BY CONTRACTOR.

EACH BEAM SHALL BE MARKED, SHOWING BRIDGE NUMBER, CASTING DATE, AND INDIVIDUAL IDENTIFICATION LETTERS AND NUMBERS. MARKINGS SHALL BE MADE ON THE FACE OF THE BEAM, NEAR THE END, SO LOCATED THAT THEY WILL BE EXPOSED AFTER THE END DIAPHRAGMS HAVE BEEN CAST. FASCIA BEAMS SHALL BE MARKED ON THE INSIDE FACE. ALL MARKINGS SHALL BE STENCILLED AND BE CLEARLY LEGIBLE. FOR LOCATION OF BEAMS, SEE FRAMING PLAN.

ALL MATERIAL AND WORK SHOWN OR NOTED ON THIS SHEET SHALL BE INCLUDED IN UNIT PRICE BID FOR PRESTRESSED CONCRETE BEAMS. SEE Mn/DOT SPEC. 2405.

SEE FRAMING PLAN FOR BEAM END MARKED "X" AND DIAPHRAGM SPACING.

APPROXIMATE WEIGHT OF BEAM IS 23.2 TONS.

AS AN ALTERNATE TO THE DIAPHRAGM ANCHORAGES SHOWN, THE CONTRACTOR MAY SUBMIT DETAILS OF A CAST-IN-PLACE ANCHORAGE TO THE ENGINEER FOR APPROVAL. ANCHORAGE MUST PROVIDE AN ULTIMATE PULL OUT STRENGTH OF 15 KIPS PER ANCHORAGE.

① MINIMUM CONCRETE STRENGTH AT TIME OF PRESTRESS TRANSFER.

② MINIMUM CONCRETE STRENGTH WHEN BEAM CAN BE TRANSPORTED AND INSTALLED.

③ DRAPED STRANDS.

④ STRAIGHT STRANDS.

⑤ PRESTRESSING STRANDS SHALL BE 7-WIRE LOW RELAXATION STRAND, CONFORMING TO ASTM A416, GRADE 270.

⑥ FOR INTEGRAL ABUTMENT, SOLE PLATE CAN BE ELIMINATED OR REPLACED WITH AN APPROVED PROTECTION PLATE.

⑦ CENTER OF GRAVITY OF HOLD DOWNS WHEN MULTIPLE HOLD DOWNS ARE USED.

REVISED: 10-22-2009

APPROVED: OCTOBER 26, 2005
STATE BRIDGE ENGINEER

S.P. NO. 1901-148 (T.H. 13=117), S.P. NO. 019-605-028, S.P. NO. 179-020-031

CERTIFIED BY Todd R. Stevens 7/9/12
LICENSED PROFESSIONAL ENGINEER DATE
NAME: TODD R. STEVENS LIC. NO. 21312

TITLE: 36" PRESTRESSED CONCRETE BEAM (PRETENSIONED) 36M-

BEAMS B1-B4

DES: P.D.G. DR: N.A.
CHK: G.B.B. CHK: P.D.G.

APPROVED: 7-9-12

FIG. 5-397.505

SHEET NO. 59 OF 91 SHEETS

BRIDGE NO. 19036

FILENAME: IP_PWP-d1453300V9036.dgn
TIME: 7:38:39 AM PLOTTED: 09-JUL-2012 PATH & FILENAME: Bridge/Final_Design/1/19036/Cadd-Plan/19036.dgn

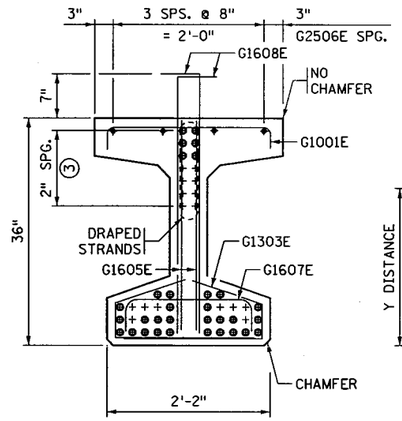

END VIEW

CUT STRANDS FLUSH WITH CONCRETE. PAINT ENDS WITH AN APPROVED GRAY EPOXY EXCEPT AS NOTED.

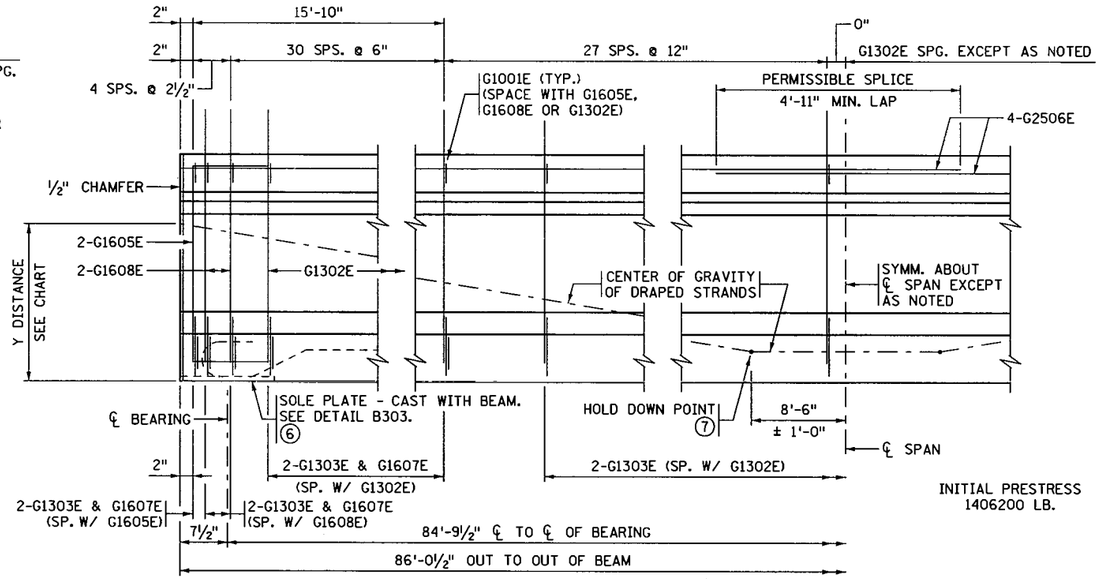

INITIAL PRESTRESS 1406200 LB.

BEAM ELEVATION

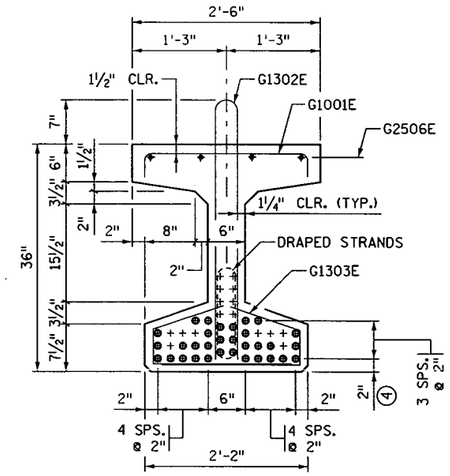

SECTION AT ℄ SPAN

Y DISTANCES (IN INCHES)			
	NO.	℄ SPAN	END
STRAIGHT STRANDS	26	4.15	☒
DRAPED STRANDS	6	5	31 ▫
TOTAL STRANDS	32	4.31	☒

Y = DISTANCE TO CENTER OF GRAVITY OF STRANDS FROM BOTTOM OF BEAM. ALL STRANDS SPACED 2" CENTER TO CENTER, HORIZONTALLY AND VERTICALLY, EXCEPT AS NOTED.

▫ A TOLERANCE OF ± 1" WILL BE PERMITTED IN THIS DIMENSION.

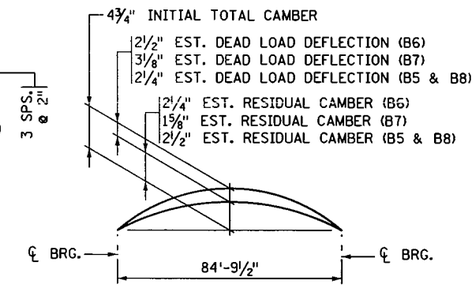

CAMBER DIAGRAM

INITIAL CAMBER IS GIVEN AFTER DIAPHRAGMS ARE IN PLACE.

DEAD LOAD DEFLECTION SHOWN IS FOR WEIGHT OF SLAB, WEARING COURSE, RAILING, SIDEWALK AND MEDIAN WHERE APPLICABLE.

ENGINEER WILL TAKE ELEVATIONS AT TOP OF BEAMS AFTER ERECTION AND WILL ALLOW FOR DEFLECTION SHOWN TO ENABLE CONTRACTOR TO BUILD FORMS TO CORRECT GRADE AND SPECIFIED SLAB THICKNESS.

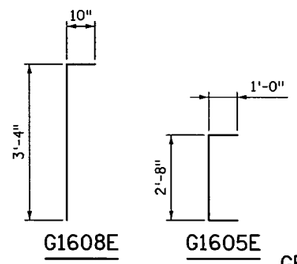

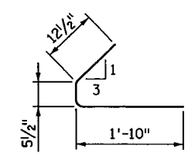

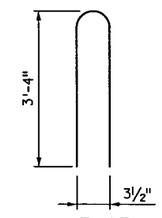

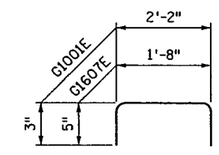

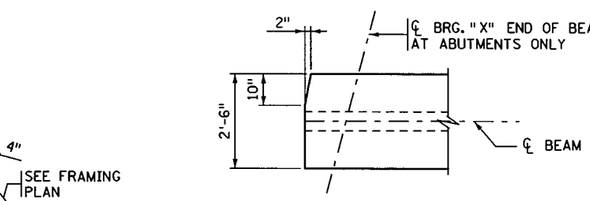

BEAM TOP FLANGE CLIP DETAIL

("X" END OF ALL BEAMS)

CALCULATED PRESTRESS LOSSES	
ELASTIC SHORTENING LOSS	23.394 KSI
LONG TERM LOSSES	23.323 KSI
TOTAL LOSSES	46.717 KSI

MINIMUM CONCRETE STRENGTH - K.S.I.	
① f'ci	② f'c
7.5 KSI	9.0 KSI

PRESTRESSING STRAND DIAMETER	
⑤	½" ☐
⑤	0.60" ☒

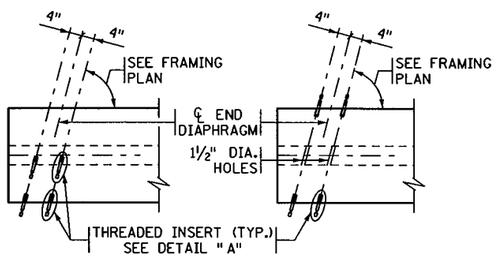

PLAN AT FASCIA BEAMS

PLAN AT INTERIOR BEAMS

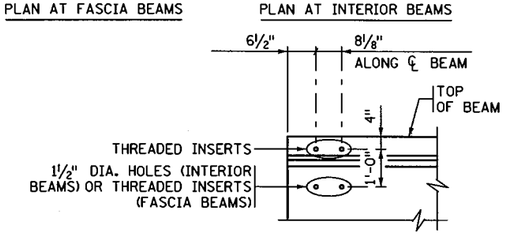

ELEVATION

CONCRETE END DIAPHRAGM

PARAPET ABUTMENT
(SEE DETAIL B814 FOR DIAPHRAGM DETAILS)

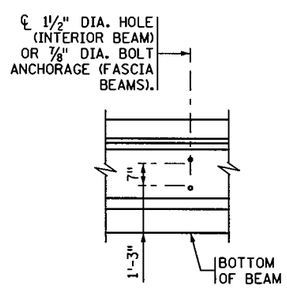

ELEVATION

STEEL INTERMEDIATE DIAPHRAGM

(SEE FRAMING PLAN FOR LOCATION ANDDETAIL B403 FOR DIAPHRAGM DETAILS)

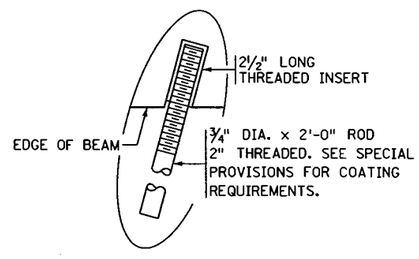

DETAIL "A"

GENERAL NOTES

TOPS OF BEAMS SHALL BE ROUGH FLOATED AND BROOMED TRANSVERSELY FOR BOND.

PROVIDE HANDLING HOOKS OR DEVICES AS REQUIRED BY CONTRACTOR.

EACH BEAM SHALL BE MARKED, SHOWING BRIDGE NUMBER, CASTING DATE, AND INDIVIDUAL IDENTIFICATION LETTERS AND NUMBERS. MARKINGS SHALL BE MADE ON THE FACE OF THE BEAM, NEAR THE END, SO LOCATED THAT THEY WILL BE EXPOSED AFTER THE END DIAPHRAGMS HAVE BEEN CAST. FASCIA BEAMS SHALL BE MARKED ON THE INSIDE FACE. ALL MARKINGS SHALL BE STENCILLED AND BE CLEARLY LEGIBLE. FOR LOCATION OF BEAMS, SEE FRAMING PLAN.

ALL MATERIAL AND WORK SHOWN OR NOTED ON THIS SHEET SHALL BE INCLUDED IN UNIT PRICE BID FOR PRESTRESSED CONCRETE BEAMS. SEE Mn/DOT SPEC. 2405.

SEE FRAMING PLAN FOR BEAM END MARKED "X" AND DIAPHRAGM SPACING.

APPROXIMATE WEIGHT OF BEAM IS 26.4 TONS.

AS AN ALTERNATE TO THE DIAPHRAGM ANCHORAGES SHOWN, THE CONTRACTOR MAY SUBMIT DETAILS OF A CAST-IN-PLACE ANCHORAGE TO THE ENGINEER FOR APPROVAL. ANCHORAGE MUST PROVIDE AN ULTIMATE PULL OUT STRENGTH OF 15 KIPS PER ANCHORAGE.

① MINIMUM CONCRETE STRENGTH AT TIME OF PRESTRESS TRANSFER.

② MINIMUM CONCRETE STRENGTH WHEN BEAM CAN BE TRANSPORTED AND INSTALLED.

③ DRAPED STRANDS.

④ STRAIGHT STRANDS.

⑤ PRESTRESSING STRANDS SHALL BE 7-WIRE LOW RELAXATION STRAND, CONFORMING TO ASTM A416, GRADE 270.

⑥ FOR INTEGRAL ABUTMENT, SOLE PLATE CAN BE ELIMINATED OR REPLACED WITH AN APPROVED PROTECTION PLATE.

⑦ CENTER OF GRAVITY OF HOLD DOWNS WHEN MULTIPLE HOLD DOWNS ARE USED.

REVISED: 10-22-2009

APPROVED: OCTOBER 26, 2005

STATE BRIDGE ENGINEER

S.P. NO. 1901-148 (T.H. 13=117), S.P. NO. 019-605-028, S.P. NO. 179-020-031

CERTIFIED BY Todd R. Stevens 7/9/12
LICENSED PROFESSIONAL ENGINEER DATE
NAME: TODD R. STEVENS LIC. NO. 21312

TITLE: 36" PRESTRESSED CONCRETE BEAM (PRETENSIONED) 36M-

BEAMS B5-B8

DES:	P.D.G.	DR:	N.A.	APPROVED: 7-9-12
CHK:	G.B.B.	CHK:	P.D.G.	

SHEET NO. 60 OF 91 SHEETS

FIG. 5-397.505

BRIDGE NO. 19036

FILENAME: IP_PWP-d1453300\90036.dgn
TIME: 7:38:56 AM
PLOTTED: 09-JUL-2012
PATH & FILENAME: Bridge/Final_Design/1/19036/Cadd-Plan/19036.dgn

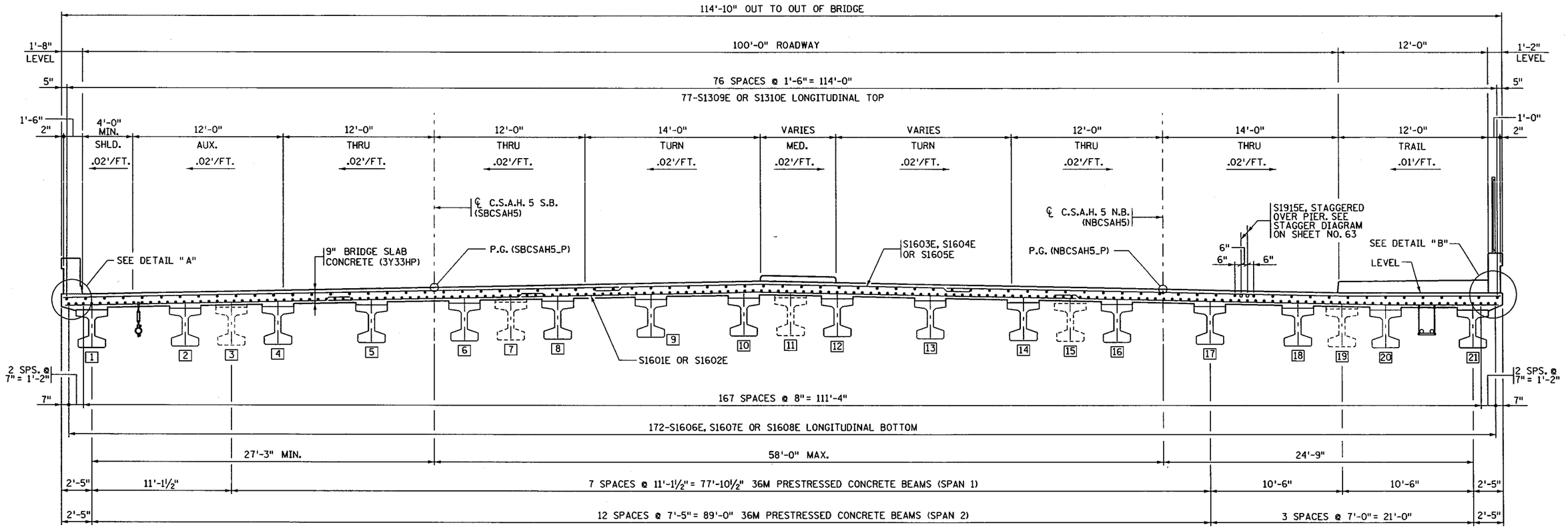

TRANSVERSE SECTION

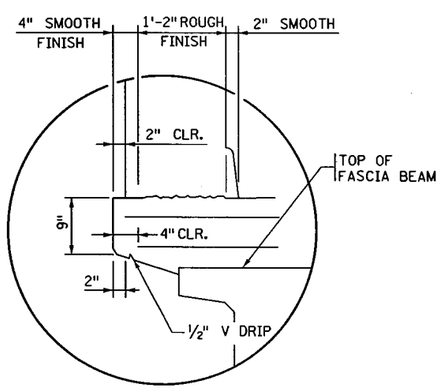

DETAIL "A"

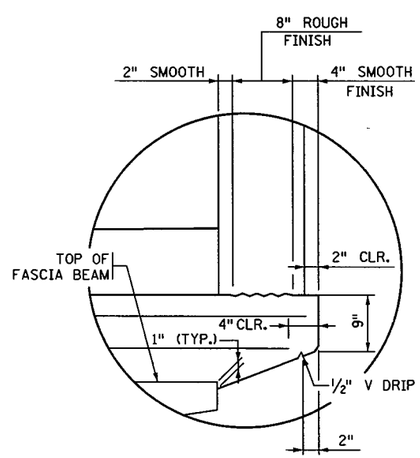

DETAIL "B"

NOTES:

☐ DESIGNATES BEAM NUMBERS

DECK THICKNESS EXAGGERATED FOR CLARITY

S.P. NO. 1901-148 (T.H. 13=117), S.P. NO. 019-605-028, S.P. NO. 179-020-031

CERTIFIED BY Todd R. Stevens 7/9/12
LICENSED PROFESSIONAL ENGINEER DATE
NAME: TODD R. STEVENS LIC. NO. 21312

TITLE: SUPERSTRUCTURE DETAILS

DES: P.D.G.	DR: N.A.	APPROVED: 7-9-12	BRIDGE NO. 19036
CHK: G.B.B.	CHK: T.R.S.	SHEET NO. 61 OF 91 SHEETS	

FILENAME: IP_PWP-d1453300v9036.dgn
TIME : 7:53:11 AM
PLOTTED : 09-JUL-2012
PATH & FILENAME: Bridge/Final_Design/1/19036/Cadd-Plan/19036.dgn

MEDIAN SIGN POST ANCHOR LOCATIONS ①					
POINT	SIGN	STATION	OFFSET	X-COORD	Y-COORD
1	C-39	112+04.00	25.40' LT.	503064.945	209648.243
2	C-27	112+38.00	25.00' LT.	503065.345	209682.243
3	C-9	113+06.00	24.00' LT.	503066.345	209750.243

MEDIAN GEOMETRY ①				
POINT	STATION	OFFSET	X-COORD	Y-COORD
1	111+98.50	23.92 LT.	503066.428	209642.743
2	112+24.86	14.00' LT.	503076.345	209669.103
3	112+54.66	14.00' LT.	503076.345	209698.903
4	113+74.76	26.00' LT.	503064.345	209819.003
5	111+98.50	30.38' LT.	503059.962	209642.743
6	113+19.63	32.00' LT.	503058.345	209763.873

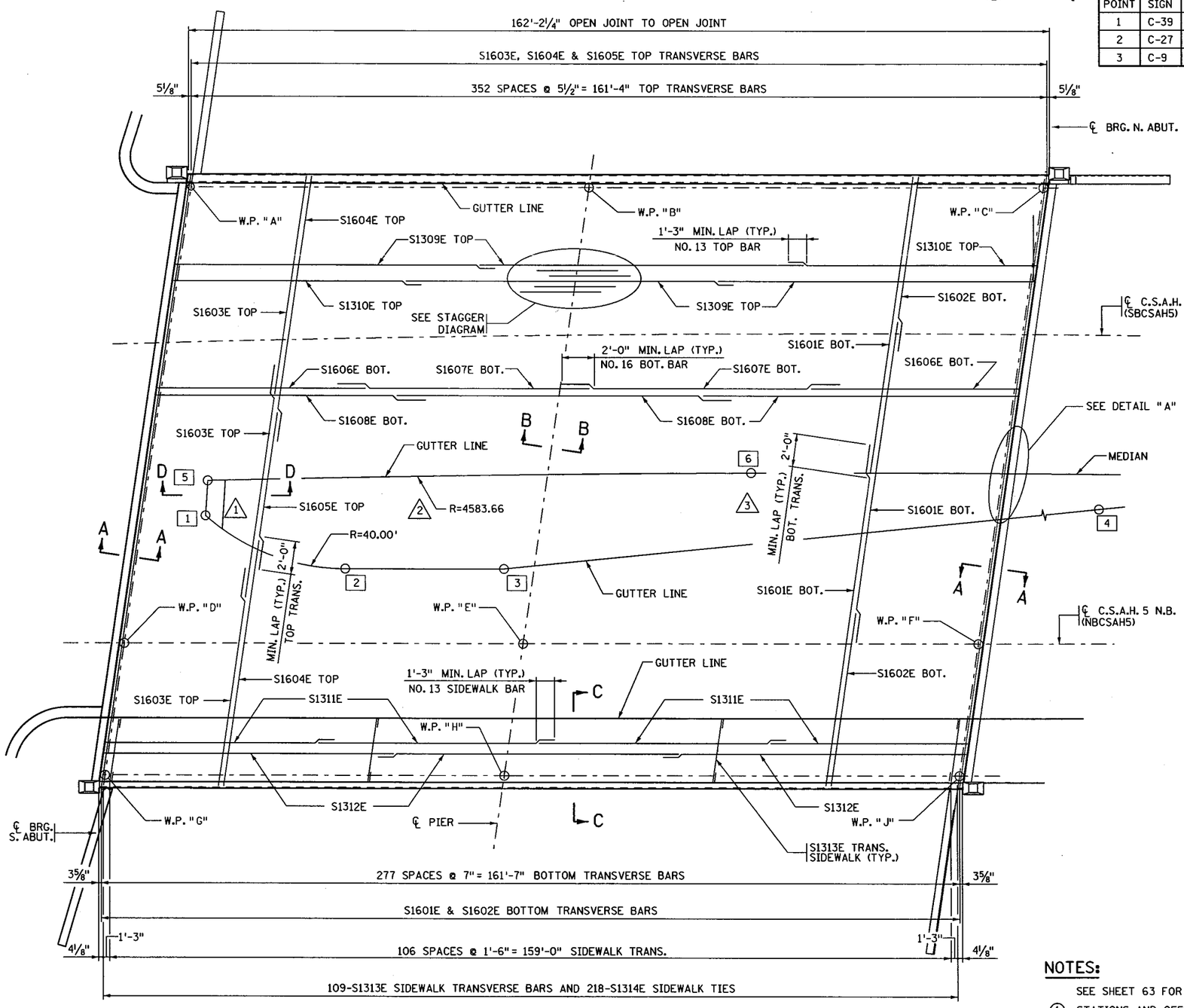

DECK PLAN

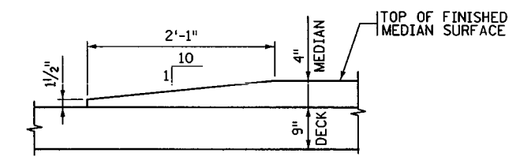

SECTION D-D

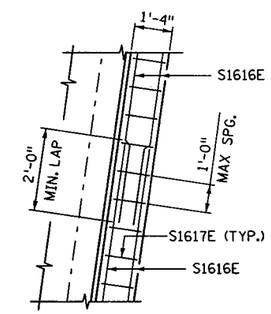

DETAIL "A"

END BLOCK REINFORCING

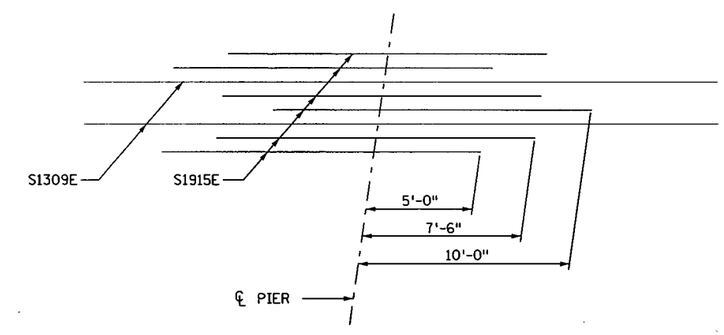

STAGGER DIAGRAM

NOTES:

SEE SHEET 63 FOR SECTIONS A-A, B-B AND C-C.

① STATIONS AND OFFSETS REFERENCED TO C.S.A.H.5 N.B.

□ DENOTES MEDIAN GEOMETRY POINT

△ DENOTES B901 SIGN POST ANCHOR LOCATION

S.P. NO. 1901-148 (T.H. 13=117), S.P. NO. 019-605-028, S.P. NO. 179-020-031

CERTIFIED BY Todd R. Stevens 7/9/12
LICENSED PROFESSIONAL ENGINEER DATE
NAME: TODD R. STEVENS LIC. NO. 21312

TITLE: SUPERSTRUCTURE DETAILS

DES: P.D.C. DR: N.A. APPROVED: 7-9-12
CHK: G.B.B. CHK: T.R.S.
SHEET NO. 62 OF 91 SHEETS

BRIDGE NO. 19036

FILENAME: IP_PWP:d1453300\9036.dgn
TIME: 7:53:49 AM
PLOTTED: 09-JUL-2012
PATH & FILENAME: Bridge/Final_Design/1/19036/Cadd-Plan/19036.dgn

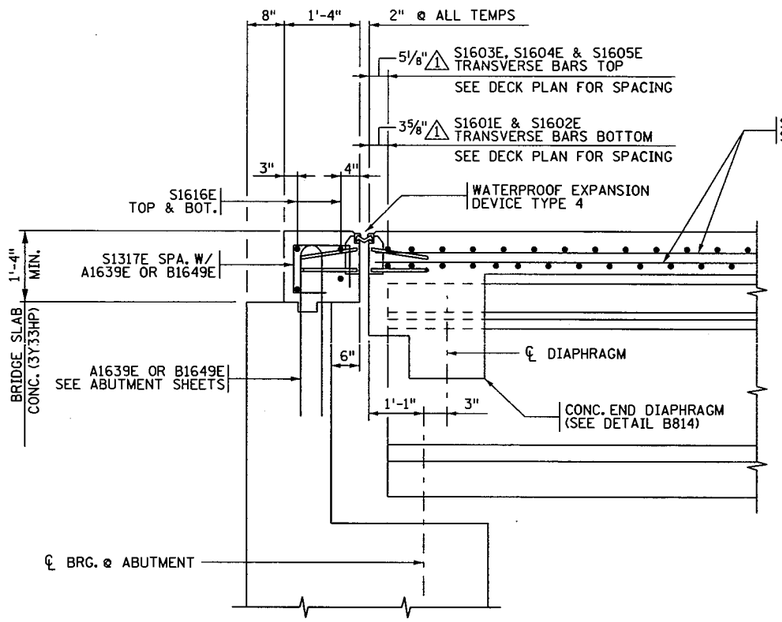

SECTION A-A

HORIZ. DIMENSIONS MEASURED PERPENDICULAR TO ℄ BRG. UNLESS NOTED OTHERWISE

⚠1 MEASURED PARALLEL TO WORKING LINE

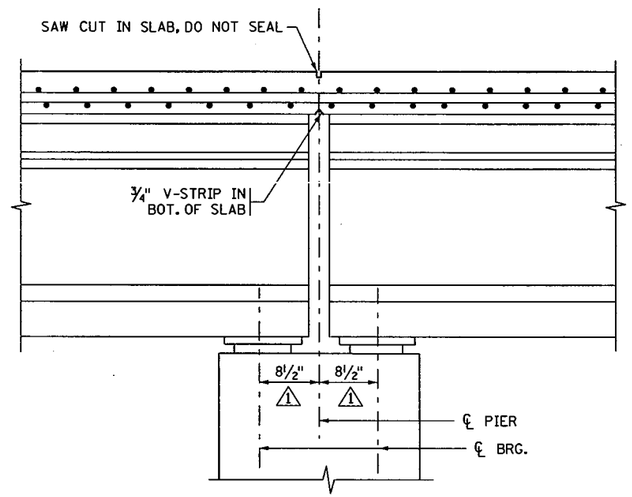

SECTION B-B

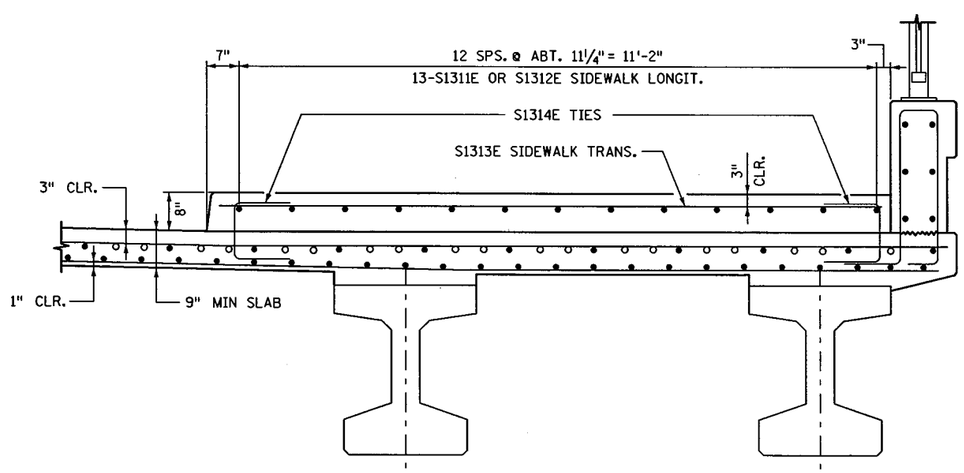

SECTION C-C

TRANSVERSE SECTION THRU SIDEWALK

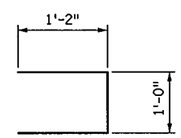

S1314E

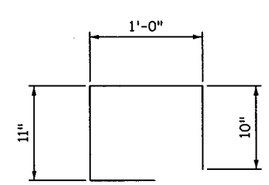

S1317E

SUMMARY OF QUANTITIES FOR SUPERSTRUCTURE

1	BRIDGE SLAB CONCRETE (3Y33HP)	18972 SQ. FT.
11 2	TYPE MOD P-1 (TL-2) RAILING CONCRETE (3Y46)	255 LIN. FT.
3	TYPE MOD P-4 (TL-4) RAILING CONCRETE (3Y46)	182 LIN. FT.
4	SIDEWALK CONCRETE (3Y46)	1983 SQ. FT.
5	RAISED MEDIAN CONCRETE (3Y46)	2114 SQ. FT.
6	REINFORCEMENT BARS (EPOXY COATED)	133780 POUND
	BRIDGE DECK PLANING	13058 SQ. FT.
	ORNAMENTAL METAL RAILING TYPE SPECIAL 1	181 LIN. FT.
	ORNAMENTAL METAL RAILING TYPE SPECIAL 2	164 LIN. FT.
7	ORNAMENTAL METAL RAILING TYPE SPECIAL 3	60 LIN. FT.
	EXPANSION JOINT DEVICES TYPE 4	230 LIN. FT.
8	EXP. CURVED PLATE BEARING ASSEMBLY	44 EACH
8	FIXED CURVED PLATE BEARING ASSEMBLY	10 EACH
	PRESTRESSED CONCRETE BEAMS 36M	2208 LIN. FT.
	DIAPHRAGMS FOR TYPE 36M PRESTRESSED BEAMS	463 LIN. FT.
	CONDUIT SYSTEM (LIGHTING)	1 LUMP SUM
	CONDUIT SYSTEM (SIGNALS)	1 LUMP SUM
	CONDUIT SYSTEM (FUTURE)	1 LUMP SUM
	NMC LOOP DETECTOR 6'X6'	4 EACH
9	BRIDGE NAME PLATE	1 EACH
10	BENCH MARK DISK	1 EACH

NOTES:

1. "BRIDGE SLAB CONCRETE (3Y33HP)" VOLUME WAS COMPUTED USING AN AVERAGE STOOL HEIGHT OF 3" INCHES AND IS APPROXIMATELY 607 CU. YDS. FOR SLAB AND APPROXIMATELY 23 CU. YDS. FOR END DIAPHRAGMS.
2. "TYPE MOD P-1 (TL-2) RAILING CONCRETE (3Y46)" VOLUME IS APPROXIMATELY 30 CU. YDS.
3. "TYPE MOD P-4 (TL-4) RAILING CONCRETE (3Y46)" VOLUME IS APPROXIMATELY 26 CU. YDS.
4. "SIDEWALK CONCRETE (3Y46)" VOLUME IS APPROXIMATELY 54 CU. YDS.
5. "RAISED MEDIAN CONCRETE (3Y46)" VOLUME IS APPROXIMATELY 26 CU. YDS.
6. INCLUDES SLAB, RAILING AND END DIAPHRAGM REINFORCEMENT.
7. LOCATED ON ABUTMENT WINGWALLS.
8. PAYMENT FOR BEARINGS INCLUDED IN ITEM "BEARING ASSEMBLY" PER EACH.
9. PAYMENT SHALL BE CONSIDERED INCIDENTAL TO ITEM "TYPE MOD P-1 (TL-2) RAILING CONCRETE (3Y46)".
10. STATE WILL FURNISH DISK. BEND PRONGS OUTWARD TO ANCHOR DISK IN CONCRETE. BOTTOM OF DISK TOP TO BE PLACED FLUSH WITH CONCRETE. PAYMENT FOR PLACING SHALL BE CONSIDERED INCIDENTAL TO CONCRETE PAY ITEMS.
11. ITEM INCLUDES 93 LIN. FT. ON ABUTMENT WINGWALLS.

BILL OF REINFORCEMENT FOR SUPERSTRUCTURE

BAR	NO.	LENGTH	SHAPE	LOCATION
S1601E	417	58'-8"	——	DECK BOT. TRANS.
S1602E	278	30'-5"	——	DECK BOT. TRANS.
S1603E	531	39'-11"	——	DECK TOP TRANS.
S1604E	352	45'-0"	——	DECK TOP TRANS.
S1605E	176	29'-9"	——	DECK TOP TRANS.
S1606E	172	39'-0"	——	DECK BOT. LONGIT.
S1607E	172	45'-0"	——	DECK BOT. LONGIT.
S1608E	258	55'-4"	——	DECK BOT. LONGIT.
S1309E	154	60'-0"	——	DECK TOP LONGIT.
S1310E	77	44'-4"	——	DECK TOP LONGIT.
S1311E	24	41'-5"	——	SIDEWALK LONGIT.
S1312E	21	54'-10"	——	SIDEWALK LONGIT.
S1313E	109	11'-7"	——	SIDEWALK TRANS.
S1314E	218	3'-4"	⊐	SIDEWALK TIES
S1915E	152	15'-0"	——	LONGIT. TOP OVER PIERS
S1616E	16	58'-8"	——	END BLOCK LONGIT.
S1317E	230	3'-5"	⊓	END BLOCK TIES

CERTIFIED BY Todd R. Stevens 7/9/12
LICENSED PROFESSIONAL ENGINEER DATE
NAME: TODD R. STEVENS LIC. NO. 21312

TITLE: SUPERSTRUCTURE DETAILS

DES: P.D.G. DR: N.A. APPROVED: 7-9-12
CHK: G.B.B. CHK: T.R.S.
SHEET NO. 63 OF 91 SHEETS

BRIDGE NO. 19036

S.P. NO. 1901-148 (T.H. 13=117), S.P. NO. 019-605-028, S.P. NO. 179-020-031

FILENAME: IP_PWP-d1145330OV9036.dgn
TIME : 7:26:58 AM
PLOTTED : 10-JUL-2012
PATH & FILENAME: Bridge/Final_Design/1/19036/Cadd-Plan/19036.dgn

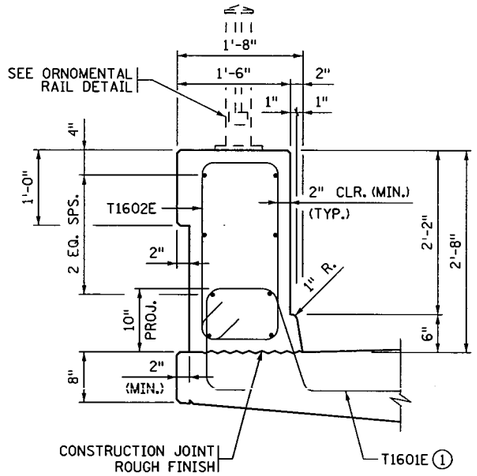

SECTION C-C

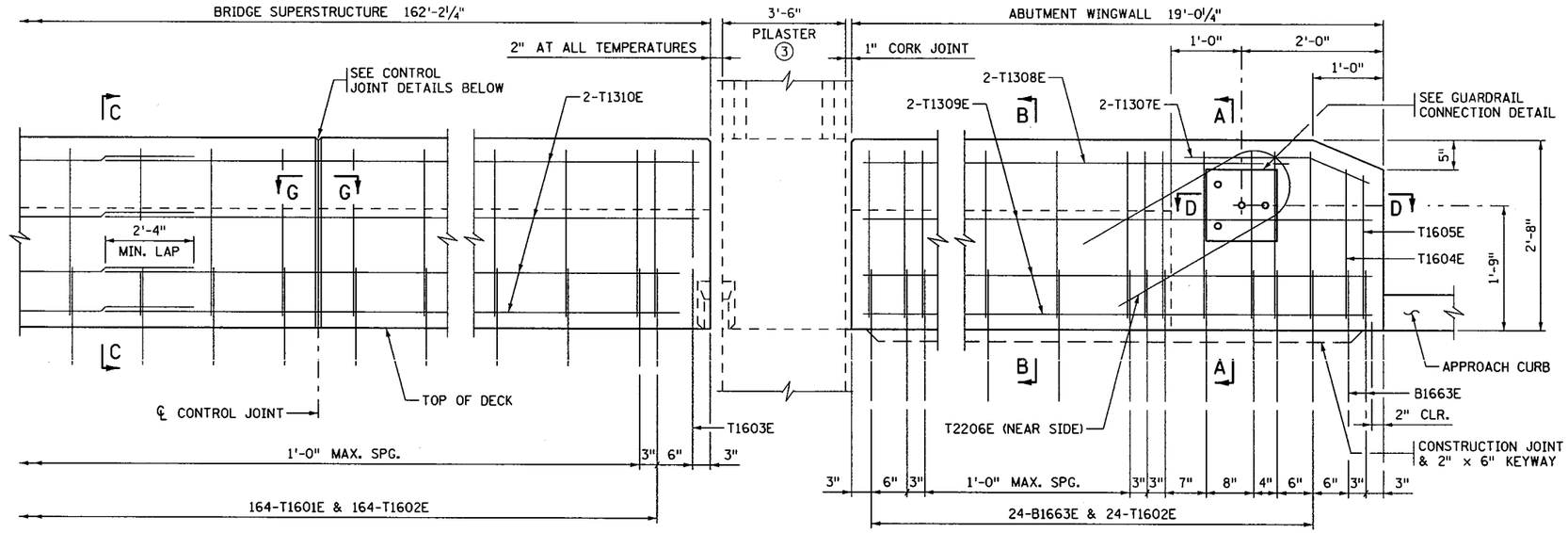

INSIDE ELEVATION OF WEST BARRIER

BARRIER MEETS TEST LEVEL 4 REQUIREMENTS OF NCHRP REPORT 350

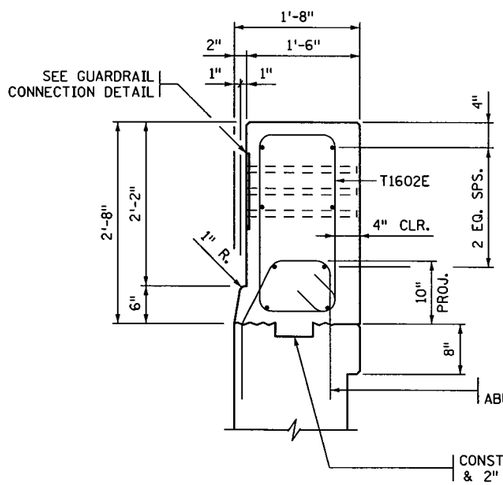

SECTION A-A

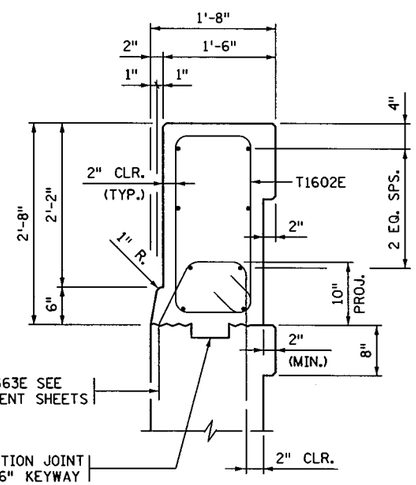

SECTION B-B

T2206E

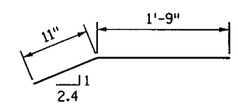

T1307E

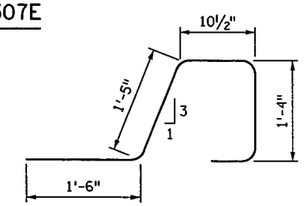

T1601E

BILL OF REINFORCEMENT FOR BARRIER

BAR	NO.	LENGTH	SHAPE	LOCATION
T1601E	164	5'-7"		BARRIER VERTICAL
T1602E	188	7'-7"		BARRIER VERTICAL
T1603E	2	5'-7"		BARRIER VERTICAL
T1604E	1	7'-1"		BARRIER VERTICAL
T1605E	1	6'-11"		BARRIER VERTICAL
T2206E	1	6'-7"		BARRIER END
T1307E	2	2'-8"		BARRIER END LONGIT.
T1308E	2	17'-6"		BARRIER LONGITUDINAL
T1309E	6	18'-8"		BARRIER LONGITUDINAL
T1310E	32	42'-3"		BARRIER LONGITUDINAL

GENERAL NOTES

LENGTH OF "TYPE MOD P-4 (TL-4) RAILING CONCRETE (3Y46)" FOR PAYMENT SHALL BE MEASURED BETWEEN THE OUTSIDE FACES OF THE CONCRETE BARRIER, MINUS WIDTH OF ABUTMENT PILASTER.

CONCRETE BARRIER = 567 LBS./FT. (0.140 CU. YDS./FT.)

FINISH ALL EDGES OF BARRIER WITH ½" VEE, EXCEPT WHERE OTHERWISE NOTED.

CONTROL JOINTS SHALL BE LOCATED AT ℄ PIER AND AT 10'-0" MAX. SPACING. SPACE JOINTS TO MISS ORNAMENTAL RAILING ANCHORAGES.

GUARDRAIL CONNECTION TO BE STRUCTURAL STEEL, Mn/DOT SPEC. 3306.

GALVANIZE STRUCTURAL STEEL PER Mn/DOT SPEC. 3394 AFTER FABRICATION.

GUARDRAIL CONNECTION AND CORK TO BE CONSIDERED INCIDENTAL TO "TYPE MOD P-4 (TL-4) RAILING CONCRETE (3Y46)".

BARRIER QUANTITIES ARE LISTED IN SUMMARY OF QUANTITIES FOR SUPERSTRUCTURE.

① PLACE BAR ON TOP OF BOTTOM REINFORCEMENT MAT.

② SEE SPECIAL PROVISIONS FOR JOINT SEALING REQUIREMENTS.

③ SEE ABUTMENT SHEETS FOR PILASTER DETAILS AND REINFORCEMENT.

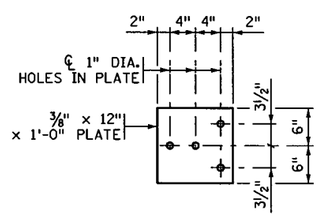

GUARDRAIL CONNECTION DETAIL

GALVANIZE AFTER FABRICATION PER Mn/DOT SPEC. 3394
ESTIMATED WEIGHT = 22 LBS

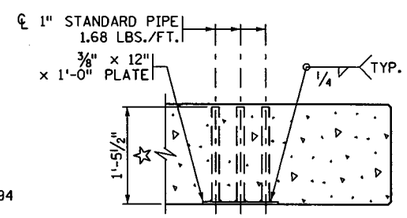

SECTION D-D

(REINFORCEMENT NOT SHOWN)
☆ DIMENSIONS INCLUDE ⅜" PLATE

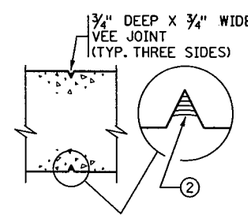

SECTION G-G
OPTION 1

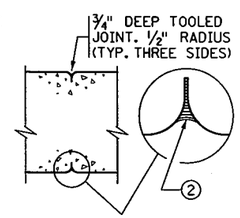

SECTION G-G
OPTION 2

CONTROL JOINT DETAILS

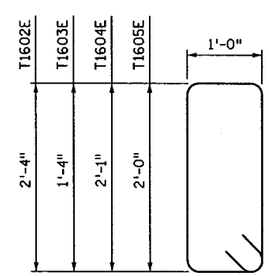

T1602E, T1603E, T1604E & T1605E

PLOTTED : 09-JUL-2012
PATH & FILENAME: Bridge/Final_Design/1/19036/Cadd-Plan/19036_barrier
FILENAME: IP_PWPxd145330OV9036_barrier

REVISED: 08-10-2006

APPROVED: JULY 25, 2005
Daniel L. Hanson
STATE BRIDGE ENGINEER

CERTIFIED BY Todd R. Stevens 7/9/12
LICENSED PROFESSIONAL ENGINEER DATE
NAME: TODD R. STEVENS LIC. NO. 21312

TITLE: CONCRETE BARRIER (TYPE P-4, TL-4)

DES: GBB	DR: BEP	MODIFIED	FIG. 5-397.173		
CHK: PDG	CHK: TRS	APPROVED: 7-9-12	BRIDGE NO. 19036		
SHEET NO. 64 OF 91 SHEETS					

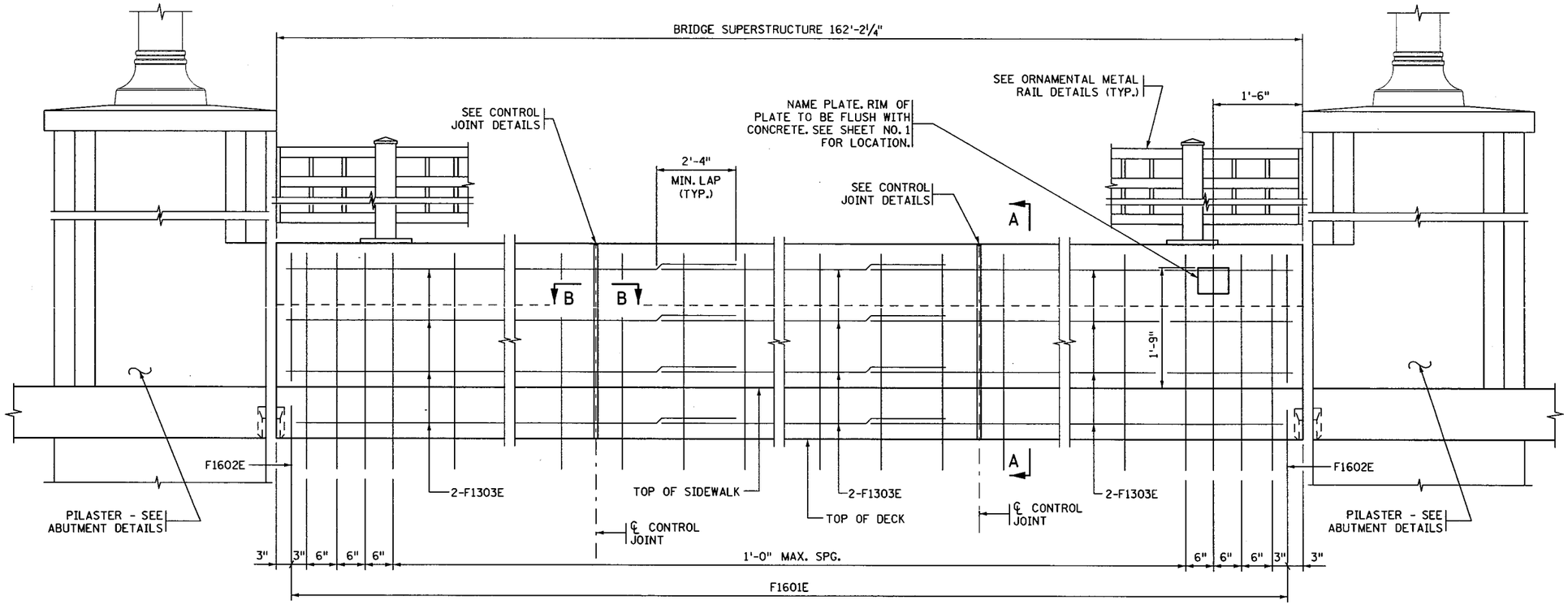

INSIDE ELEVATION OF PARAPET

BARRIER MEETS TEST LEVEL 2 REQUIREMENTS OF NCHRP REPORT 350

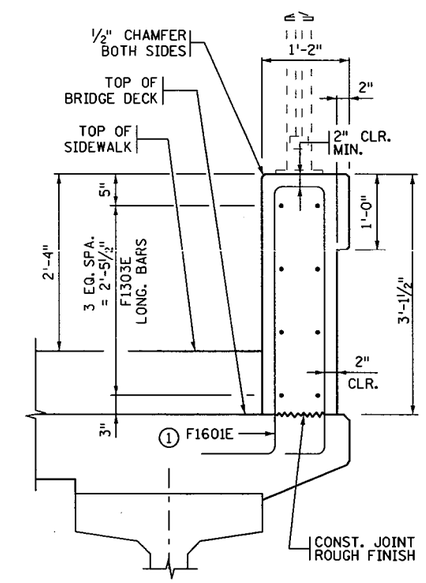

SECTION A-A

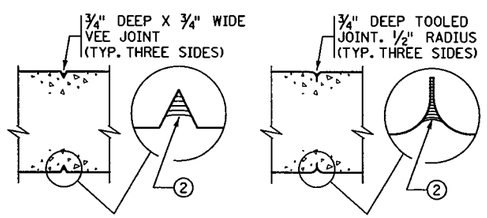

SECTION B-B
OPTION 1

SECTION B-B
OPTION 2

CONTROL JOINT DETAILS

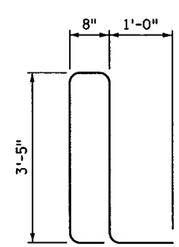

F1601E

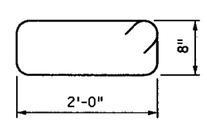

F1602E

BILL OF REINFORCEMENT FOR BRIDGE PARAPET				
BAR	NO.	LENGTH	SHAPE	LOCATION
F1601E	166	9'-0"		PARAPET VERTICAL
F1602E	2	6'-3"		PARAPET VERTICAL
F1303E	32	42'-3"	——	PARAPET LONGITUDINAL

GENERAL NOTES

LENGTH OF "TYPE MOD P-1 (TL-2) RAILING CONCRETE (3Y46)" FOR PAYMENT SHALL BE MEASURED BETWEEN THE OUTSIDE FACES OF THE CONCRETE RAILING.

CONCRETE RAILING = 494 LBS./FT. (0.122 CU. YDS./FT.)

FINISH ALL EDGES OF PARAPET WITH ½" CHAMFER, EXCEPT WHERE OTHERWISE NOTED.

CONTROL JOINTS SHALL BE LOCATED AT ℄ PIER AND AT 10'-0" MAX. SPACING. SPACE JOINTS TO MISS ORNAMENTAL RAILING ANCHORAGES.

NAME PLATE TO BE CONSIDERED INCIDENTAL TO "TYPE MOD P-1 (TL-2) RAILING CONCRETE (3Y46)".

PARAPET QUANTITIES ARE LISTED IN SUMMARY OF QUANTITIES FOR SUPERSTRUCTURE.

① PLACE BAR ON TOP OF BOTTOM REINFORCEMENT MAT.

② SEE SPECIAL PROVISIONS FOR JOINT SEALING REQUIREMENTS.

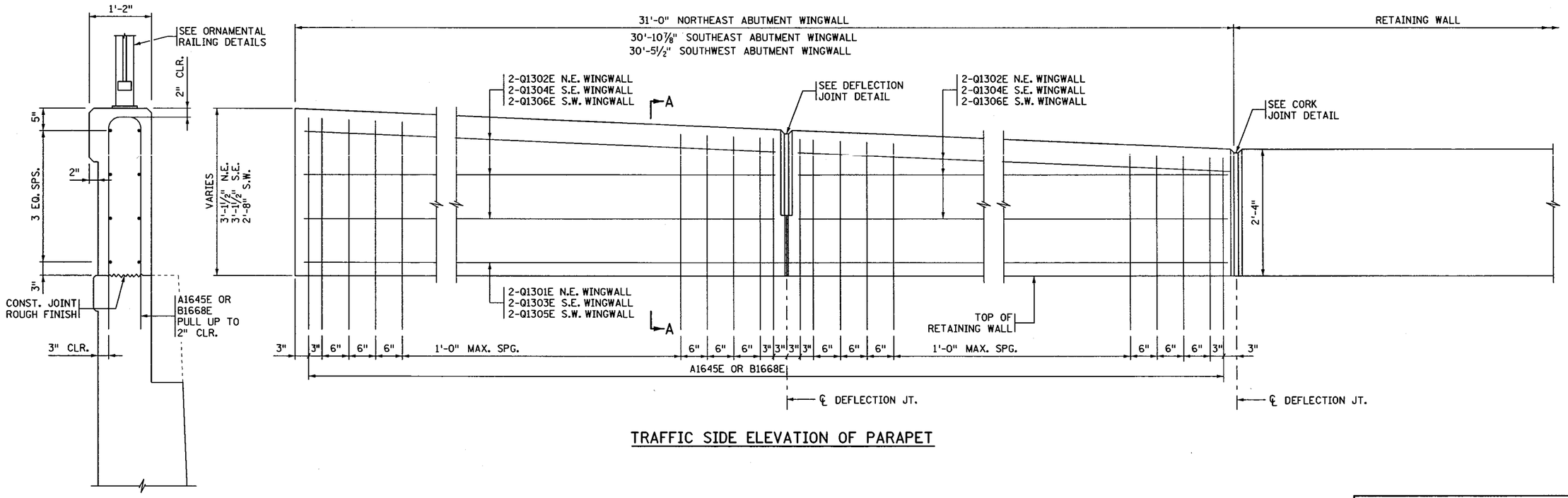

TRAFFIC SIDE ELEVATION OF PARAPET

SECTION A-A

BILL OF REINFORCEMENT FOR WINGWALL PARAPET				
BAR	NO.	LENGTH	SHAPE	LOCATION
Q1301E	2	30'-8"	——	NORTHEAST WINGWALL LONGIT.
Q1302E	12	15'-1"	——	NORTHEAST WINGWALL LONGIT.
Q1303E	2	30'-6"	——	SOUTHEAST WINGWALL LONGIT.
Q1304E	12	15'-0"	——	SOUTHEAST WINGWALL LONGIT.
Q1305E	2	30'-1"	——	SOUTHWEST WINGWALL LONGIT.
Q1306E	12	14'-10"	——	SOUTHWEST WINGWALL LONGIT.

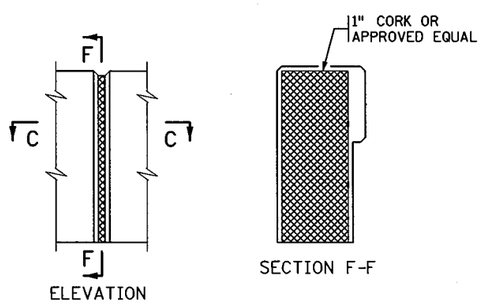

RAIL CORK JOINT

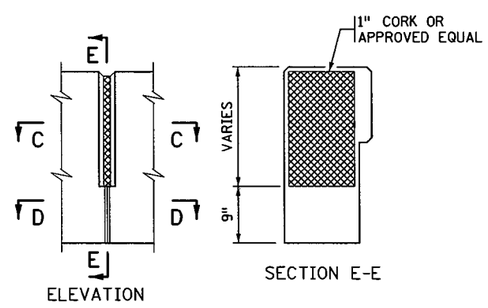

DEFLECTION JOINT DETAILS

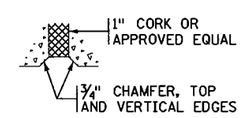

SECTION C-C

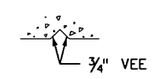

SECTION D-D

GENERAL NOTES

LENGTH OF "TYPE MOD P-1 (TL-2) RAILING CONCRETE (3Y46)" FOR PAYMENT SHALL BE MEASURED BETWEEN THE FACE OF THE CONCRETE RAILING AT THE ABUTMENT AND THE RETAINING WALL JOINT.

CONCRETE PARAPET = 350 LBS./FT. (0.086 CU. YDS./FT.)

FINISH ALL EDGES OF CONCRETE PARAPET WITH ½" VEE, EXCEPT WHERE OTHERWISE NOTED.

MAX. SPACING OF CONCRETE DEFLECTION JOINTS SHALL BE 20 FT.

SPACE DEFLECTION JOINTS TO MISS ORNAMENTAL RAILING ANCHORAGES.

FIG. 5-397.120 MOD.

REVISED:

APPROVED: DECEMBER 18, 2003

STATE BRIDGE ENGINEER

CERTIFIED BY Todd R. Stevens 7/9/12
LICENSED PROFESSIONAL ENGINEER DATE
NAME: TODD R. STEVENS LIC. NO. 21312

TITLE: CONCRETE PARAPET (TYPE P-1)

DES: GBB DR: RLV
CHK: PDG CHK: TRS

APPROVED: 7-9-12

SHEET NO. 66 OF 91 SHEETS

BRIDGE NO. 19036

FILENAME: IP_PWP-dl453300\br19036_ral.dgn
TIME : 11:01:01 AM
PLOTTED : 09-JUL-2012
PATH & FILENAME: Bridge/Final_Design/1/19036/Cadd-Plan/br19036_ral.dgn

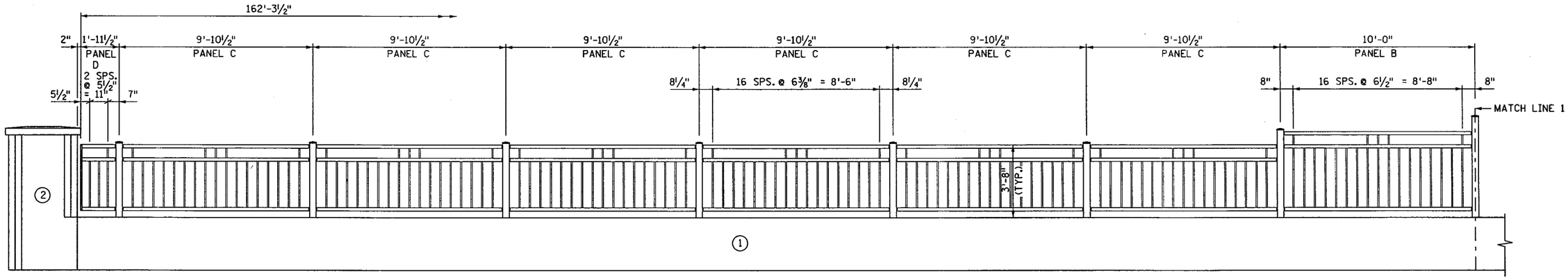

WEST RAILING INSIDE ELEVATION

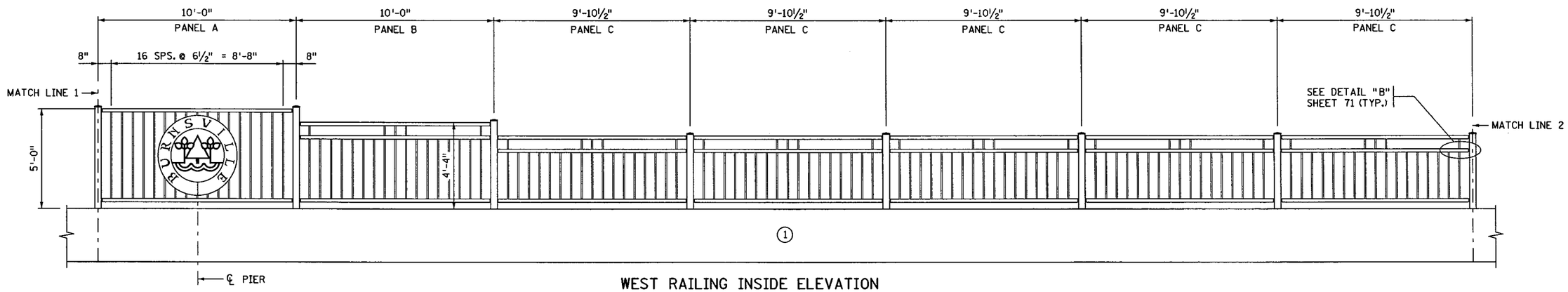

WEST RAILING INSIDE ELEVATION

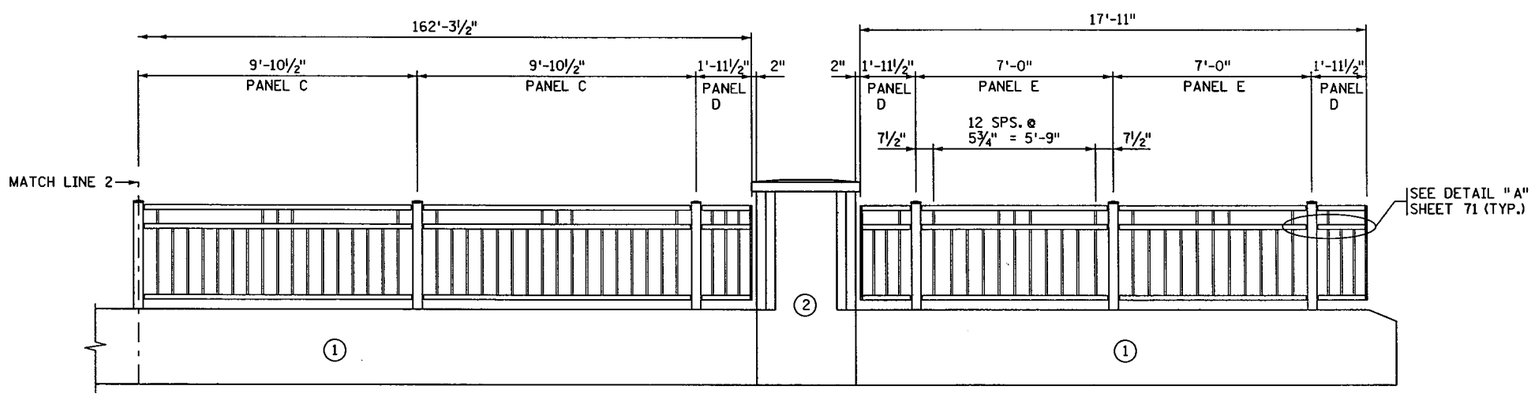

WEST RAILING INSIDE ELEVATION

NOTES:

1. CONCRETE BARRIER TYPE MOD P-4.
2. ABUTMENT PILASTER.

S.P. NO. 1901-148 (T.H. 13=117), S.P. NO. 019-605-028, S.P. NO. 179-020-031

CERTIFIED BY Todd R. Stevens 7/9/12
LICENSED PROFESSIONAL ENGINEER DATE
NAME: TODD R. STEVENS LIC. NO. 21312

TITLE: ORNAMENTAL METAL RAILING TYPE SPECIAL 1

DES: GBB	DR: RLV	APPROVED: 7-9-12	BRIDGE NO. 19036
CHK: PDG	CHK: TRS		
SHEET NO. 67 OF 91 SHEETS			

TIME : 11:01:11 AM
PLOTTED : 09-JUL-2012
PATH & FILENAME: Bridge/Final_Design/1/19036/Cadd-Plan/br19036_ral.dgn
FILENAME: IP_PWP-d1453300\br19036_ral.dgn

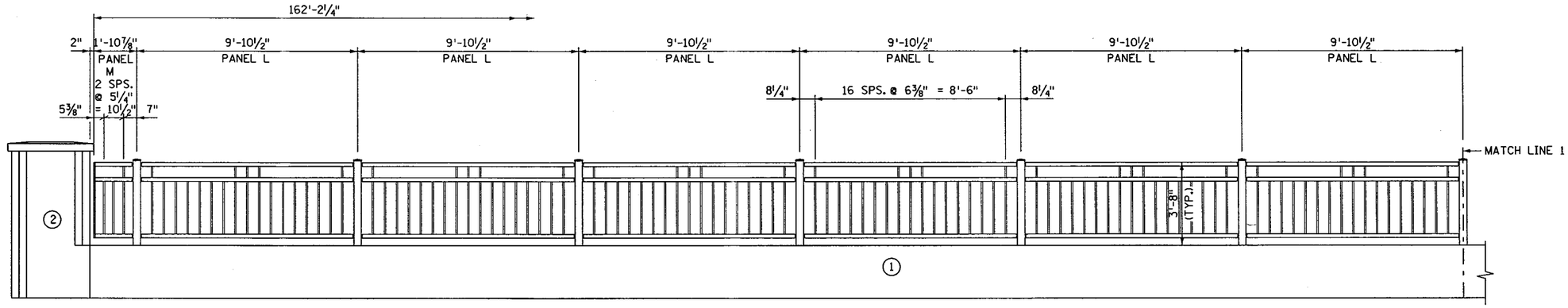

EAST RAILING INSIDE ELEVATION

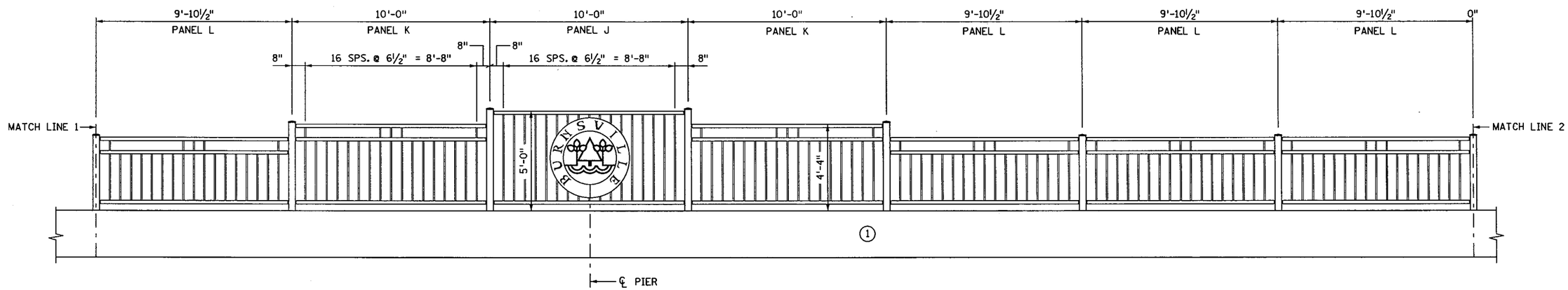

EAST RAILING INSIDE ELEVATION

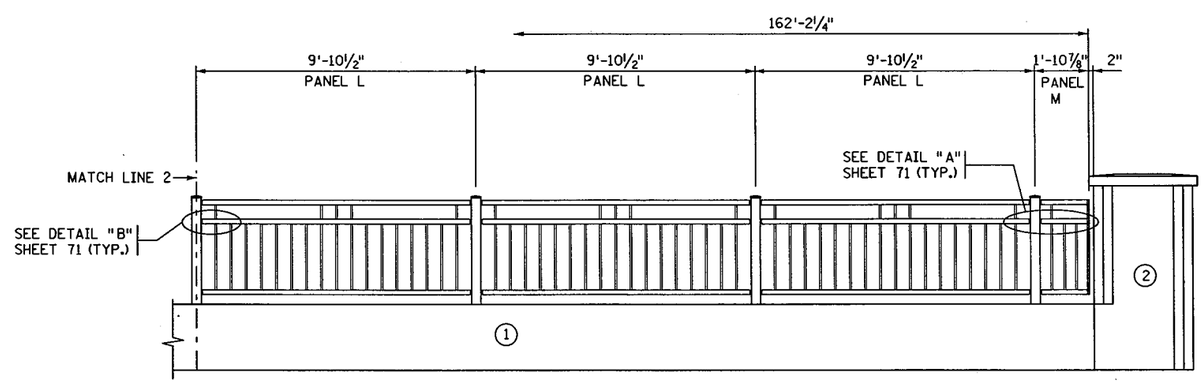

EAST RAILING INSIDE ELEVATION

NOTES:

1. CONCRETE BARRIER TYPE MOD P-1.
2. ABUTMENT PILASTER.

S.P. NO. 1901-148 (T.H. 13=117), S.P. NO. 019-605-028, S.P. NO. 179-020-031

CERTIFIED BY Todd R. Stevens 7/9/12
LICENSED PROFESSIONAL ENGINEER DATE
NAME: TODD R. STEVENS LIC. NO. 21312

TITLE: ORNAMENTAL METAL RAILING TYPE SPECIAL 2

DES: GBB	DR: RLV	APPROVED: 7-9-12	BRIDGE NO. 19036
CHK: PDG	CHK: TRS		
SHEET NO. 68 OF 91 SHEETS			

FILENAME: IP_PWP-dl453300\bri9036_ral.dgn
TIME : 11:01:23 AM
PLOTTED : 09-JUL-2012
PATH & FILENAME: Bridge/Final_Design/1/19036/Cadd-Plan/bri9036_ral.dgn

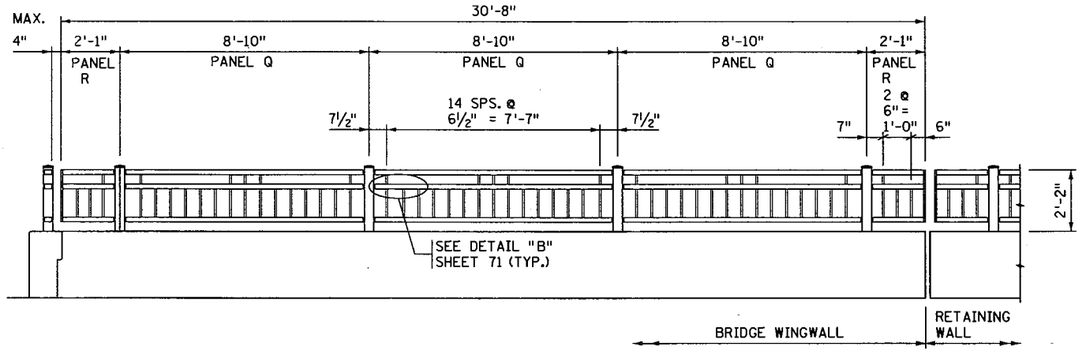

NORTHEAST RAILING ELEVATION

TYPE SPECIAL 3, LOOKING NORTH

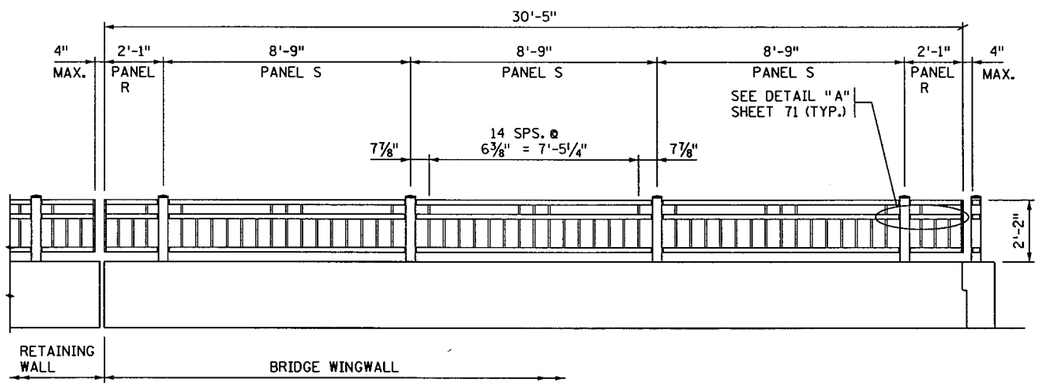

SOUTHEAST RAILING ELEVATION

TYPE SPECIAL 3, LOOKING SOUTH

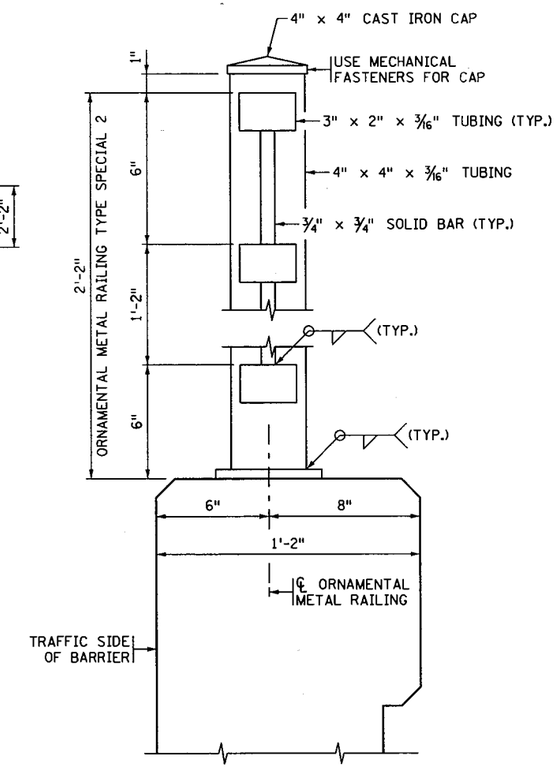

SECTION THRU RAILING

PANEL "L", "M", "Q", "R" AND "S"

GENERAL NOTES:

ALL STRUCTURAL STEEL TUBING IN THE RAIL SHALL BE ASTM A 500, GRADE B AND A513, GRADE 2. 3361. ALL OTHER STRUCTURAL STEEL SHALL CONFORM TO Mn/DOT SPEC. 3306.

ANCHOR RODS SHALL CONFORM TO Mn/DOT SPEC. 3385, TYPE A.

FASTENERS SHALL BE PER Mn/DOT SPEC. 3391 AND SHALL BE MECHANICALLY GALVANIZED PER ASTM B 695 CLASS 50.

VENT HOLES SHALL BE DRILLED IN THE RAIL POST BASE AND THE RAIL TUBES AS NECESSARY TO FACILITATE GALVANIZING.

GALVANIZE ALL OTHER STRUCTURAL STEEL PER Mn/DOT SPEC. 3394 AFTER FABRICATION.

RAIL POSTS AND PICKETS SHALL BE VERTICAL.

HORIZONTAL RAILS SHALL BE PARALLEL TO THE TOP OF THE PARAPET.

SEE SPECIAL PROVISIONS FOR RAIL ANCHORAGE REQUIREMENTS.

RAILING, BASE PLATES AND EXPOSED PORTIONS OF BOLTS, NUTS AND WASHERS SHALL BE PAINTED IN ACCORDANCE WITH THE SPECIAL PROVISIONS.

METAL RAILING SHALL BE GROUNDED WITH 5/8" DIA. COPPER ROD AS PER Mn/DOT SPEC. 2557.

PRICE BID FOR ORNAMENTAL METAL RAILING INCLUDES THE ANCHORAGES AND ALL MATERIAL ABOVE TOP OF CONCRETE PARAPET.

SEE SHEET 48 FOR MORE DETAILS.

LENGTH OF ORNAMENTAL METAL RAILING FOR PAYMENT SHALL BE MEASURED BETWEEN THE OUTSIDE FACES OF THE END PLATES, WITH DEDUCTIONS FOR THE WIDTH OF CONCRETE PILASTERS.

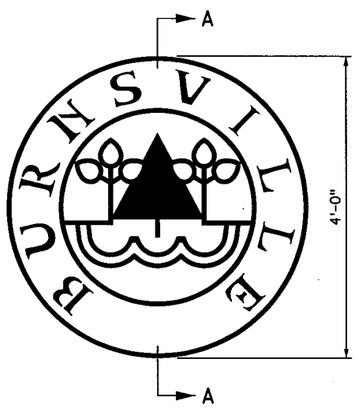

CITY LOGO ELEVATION

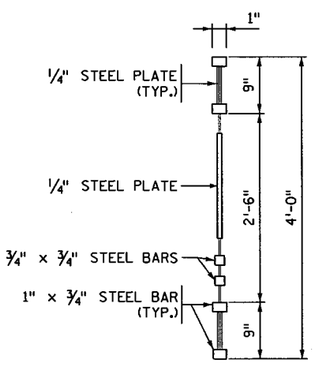

SECTION A-A

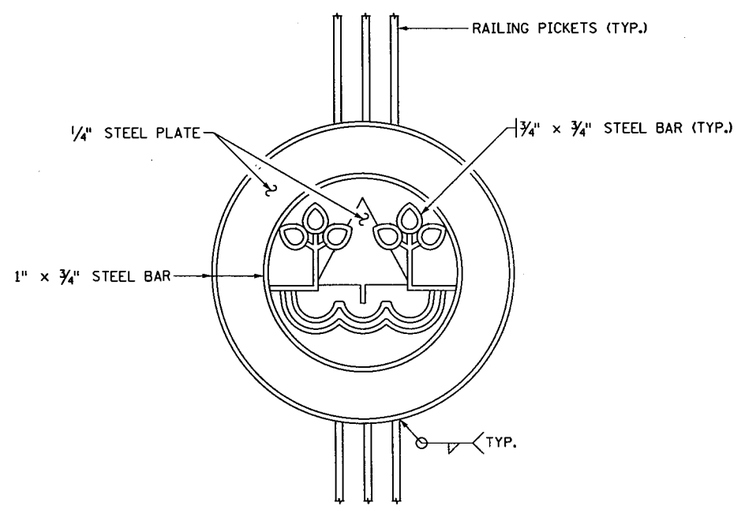

STEEL PLATE

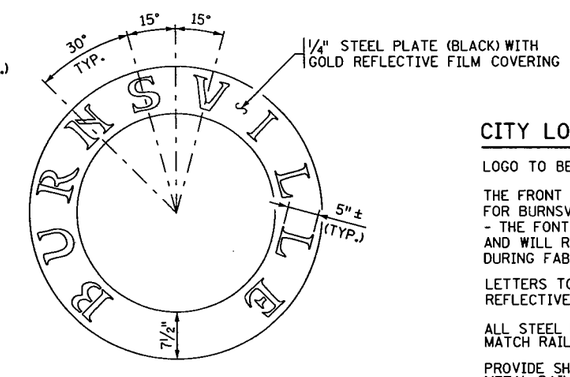

LETTERING RING

(TO BE USED ON FRONT AND BACK)

CITY LOGO NOTES:

LOGO TO BE READABLE FROM FRONT AND BACK.

THE FRONT SHOWN DUPLICATES THE FRONT USED FOR BURNSVILLE LIGHT POLE MEDALLIONS
- THE FONT IS NOT A COMMONLY AVAILABLE FONT AND WILL REQUIRE THE CREATION OF A STENCIL DURING FABRICATION.

LETTERS TO BE CUT-OUT FROM GOLD COLORED REFLECTIVE MATERIAL.

ALL STEEL ELEMENTS TO BE PAINTED BLACK TO MATCH RAILING.

PROVIDE SHOP DRAWINGS FOR MEDALLION WITH METAL RAILING SHOP DRAWINGS.

CONTACT BRIDGE ARCHITECTURAL SPECIALIST FOR ADDITIONAL DETAILS.

FILENAME: IP_PWP-dl453300\bri9036_ral.dgn
TIME : 11:01:33 AM
PLOTTED : 09-JUL-2012
PATH & FILENAME: Bridge/Final_Design/1/19036/Cadd-Plan/bri9036_ral.dgn

S.P. NO. 1901-148 (T.H. 13=117), S.P. NO. 019-605-028, S.P. NO. 179-020-031

CERTIFIED BY Todd R. Stevens 7/9/12 LICENSED PROFESSIONAL ENGINEER DATE NAME: TODD R. STEVENS LIC. NO. 21312	TITLE: ORNAMENTAL METAL RAILING TYPE SPECIAL 1, 2 & 3	DES: GBB DR: RLV CHK: PDG CHK: TRS	APPROVED: 7-9-12	SHEET NO. 69 OF 91 SHEETS	BRIDGE NO. 19036

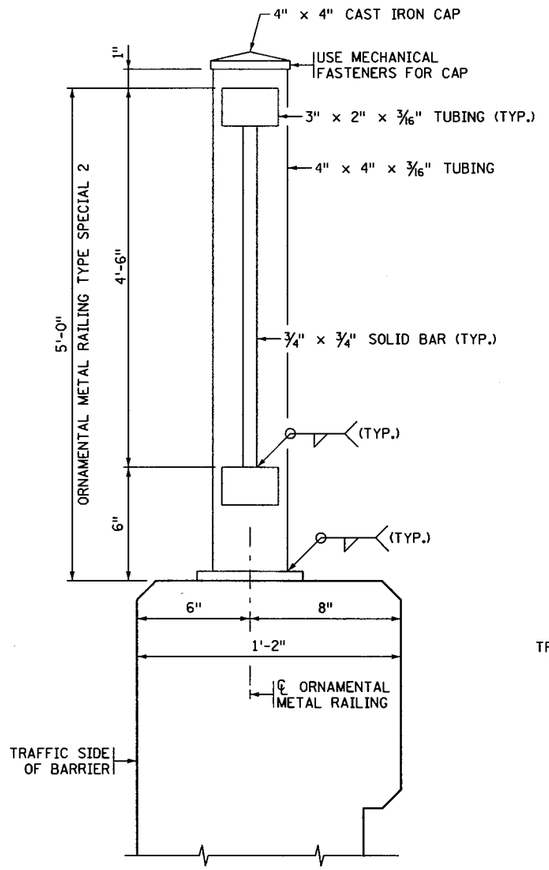

SECTION THRU RAILING

PANEL "J"

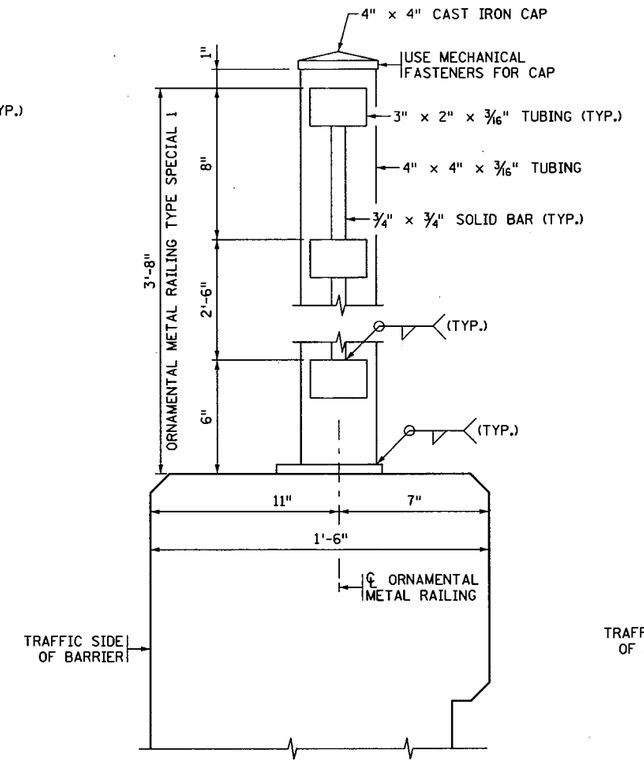

SECTION THRU RAILING

PANEL "C" AND "D"

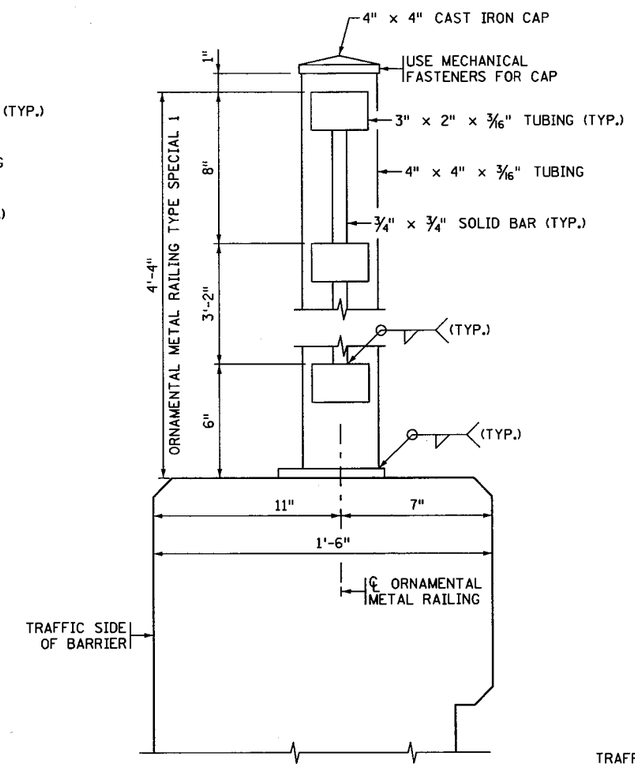

SECTION THRU RAILING

PANEL "B"

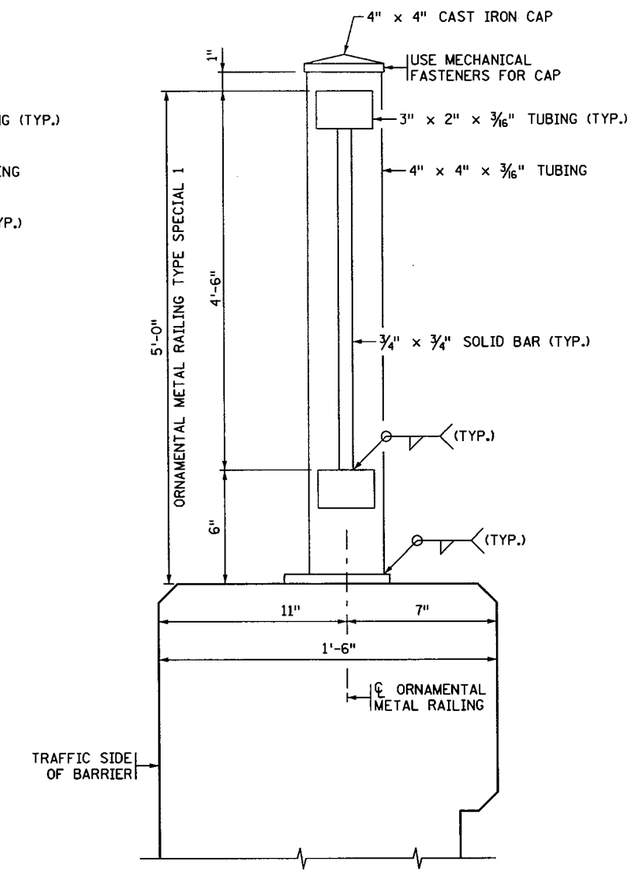

SECTION THRU RAILING

PANEL "A"

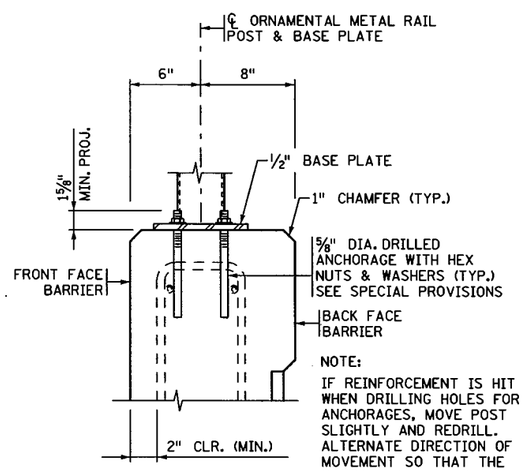

NOTE:

IF REINFORCEMENT IS HIT WHEN DRILLING HOLES FOR ANCHORAGES, MOVE POST SLIGHTLY AND REDRILL. ALTERNATE DIRECTION OF MOVEMENT SO THAT THE OVERALL RAIL LENGTH COMES OUT THE SAME.

ANCHOR DETAIL

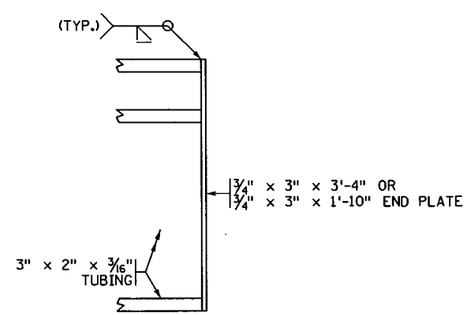

END PANEL DETAIL

END PANELS "D", "M" AND "R"

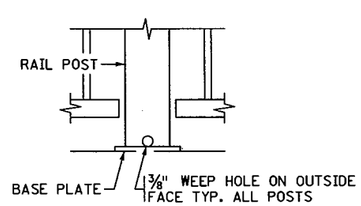

WEEPHOLE DETAIL

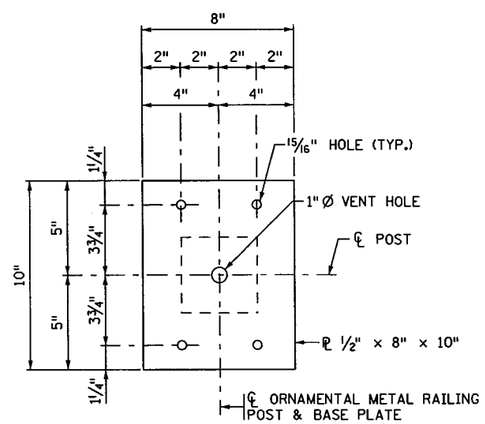

BASE PLATE TYPE 2

TYPE SPECIAL 2 & 3 RAILING

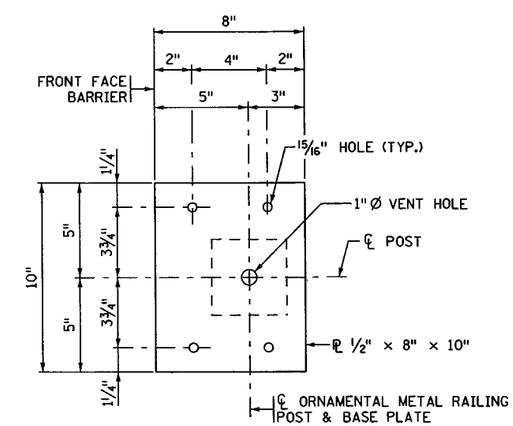

BASE PLATE TYPE 1

TYPE SPECIAL 1 RAILING

S.P. NO. 1901-148 (T.H. 13=117), S.P. NO. 019-605-028, S.P. NO. 179-020-031

CERTIFIED BY Todd R. Stevens 7/9/12 (LICENSED PROFESSIONAL ENGINEER, DATE) NAME: TODD R. STEVENS LIC. NO. 21312	TITLE: ORNAMENTAL METAL RAILING DETAILS TYPE SPECIAL 1, 2 AND 3	DES: GBB DR: RLV CHK: PDG CHK: TRS	APPROVED: 7-9-12	BRIDGE NO. 19036
		SHEET NO. 70 OF 91 SHEETS		

FILENAME: IP_PWP-dl453300\bri9036_ral.dgn
TIME : 11:01:46 AM
PLOTTED : 09-JUL-2012
PATH & FILENAME: Bridge/Final_Design/1/19036/Cadd-Plan/bri9036_ral.dgn

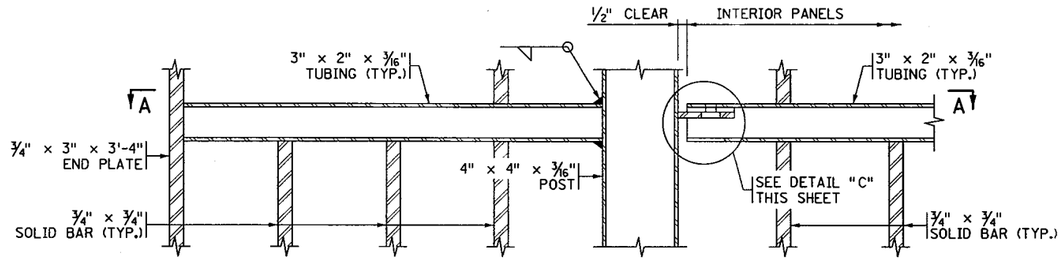

DETAIL "A"

DETAIL "B"

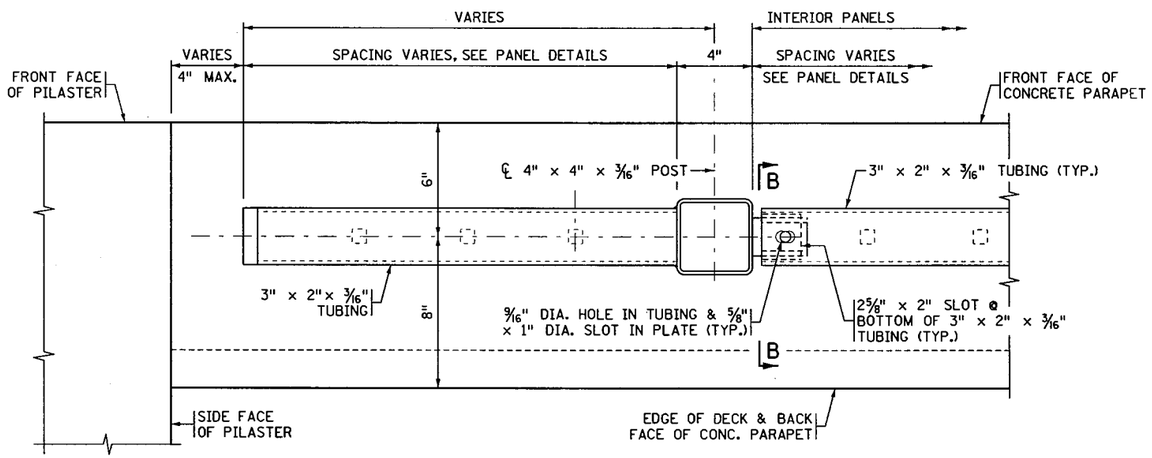

SECTION A-A

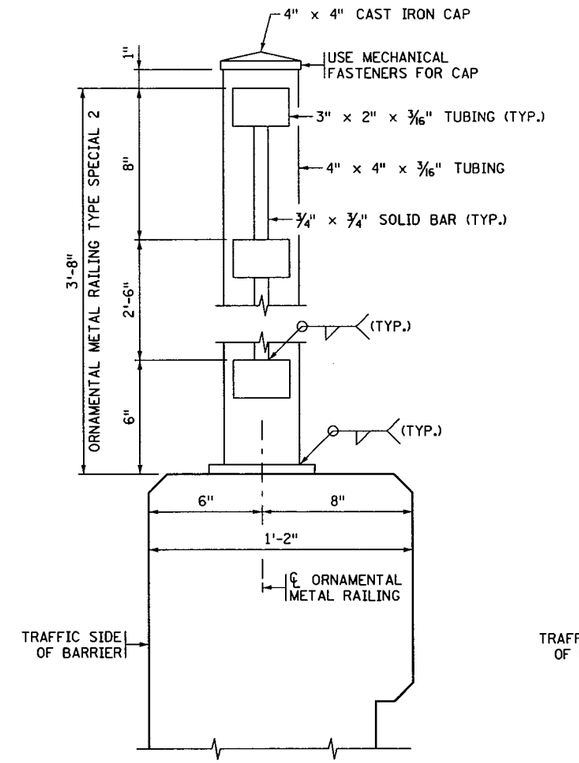

SECTION THRU RAILING

PANEL "L", "M", "Q", "R" AND "S"

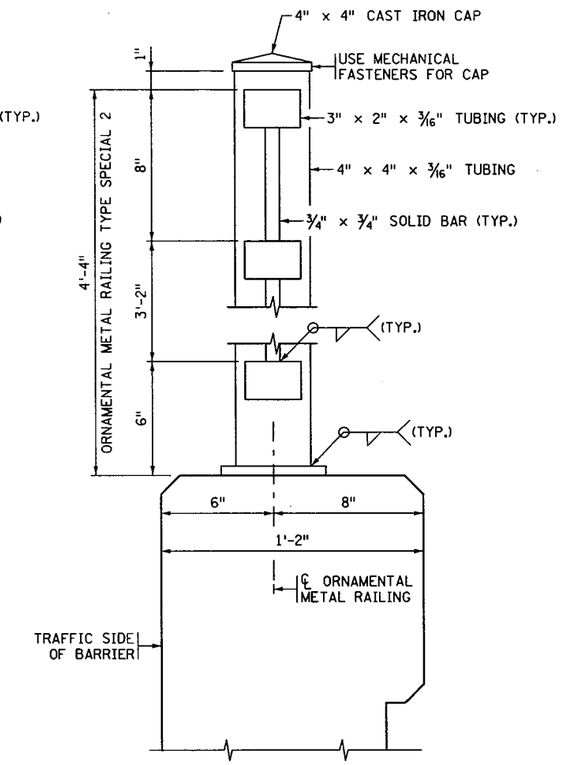

SECTION THRU RAILING

PANEL "K"

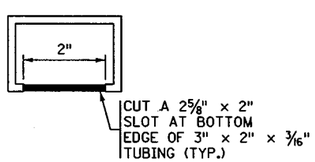

SECTION B-B

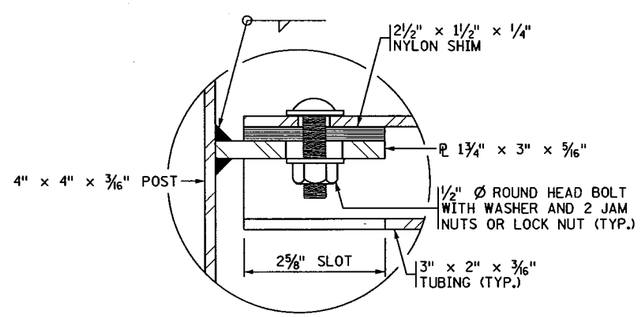

DETAIL "C"

NOTE:

SEE SHEETS 67, 68 AND 69 FOR LOCATION OF DETAIL "A" AND DETAIL "B"

S.P. NO. 1901-148 (T.H. 13=117), S.P. NO. 019-605-028, S.P. NO. 179-020-031

CERTIFIED BY Todd R. Stevens 7/9/12 LICENSED PROFESSIONAL ENGINEER DATE NAME: TODD R. STEVENS LIC. NO. 21312	TITLE: ORNAMENTAL METAL RAILING DETAILS TYPE SPECIAL 1, 2 AND 3	DES: GBB DR: RLV CHK: PDG CHK: TRS	APPROVED: 7-9-12	BRIDGE NO. 19036
		SHEET NO. 71 OF 91 SHEETS		

FILENAME: IP_PWP-dl453300\bri9036_ral.dgn
TIME : 11:01:56 AM
PLOTTED : 09-JUL-2012
PATH & FILENAME: Bridge/Final_Design/1/19036/Cadd-Plan/bri9036_ral.dgn

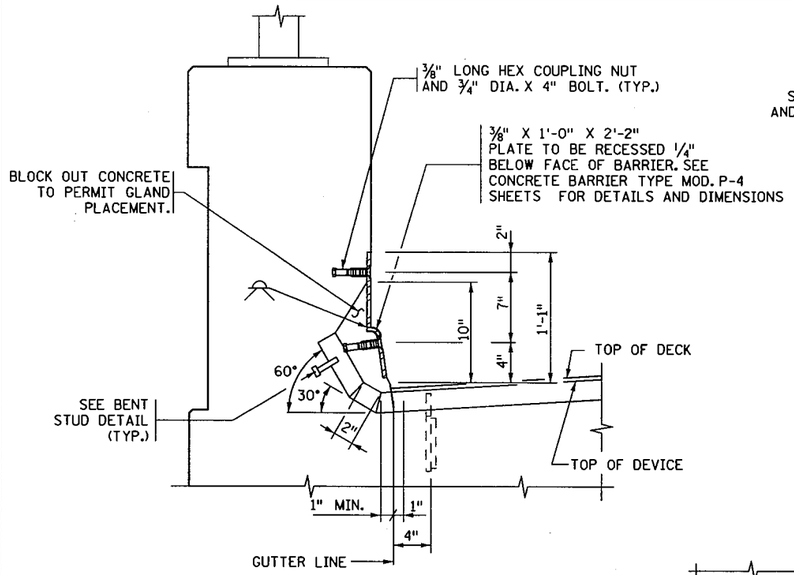

SECTION THROUGH TYPE MOD P-4 CONCRETE RAILING

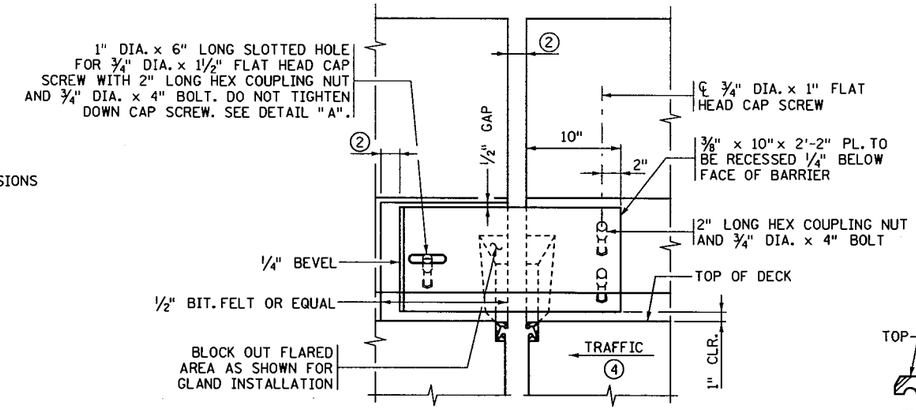

RAILING ELEVATION

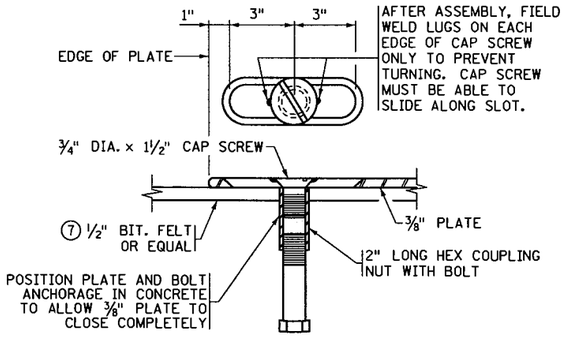

DETAIL "A"

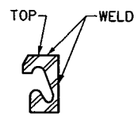

SECTION C-C

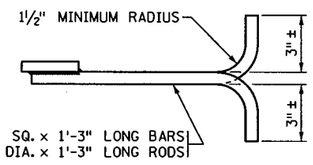

BAR-ROD DETAIL

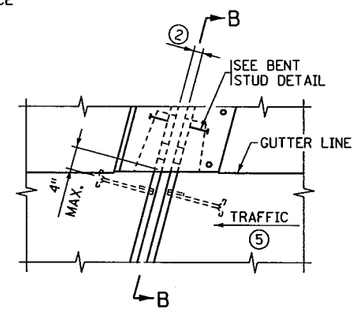

PLAN VIEW @ EXPANSION DEVICE

MEDIAN OR SIDEWALK ALTERNATE

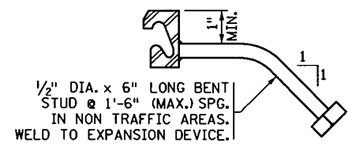

BENT STUD DETAIL

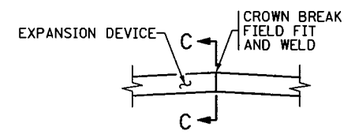

DETAIL "B"

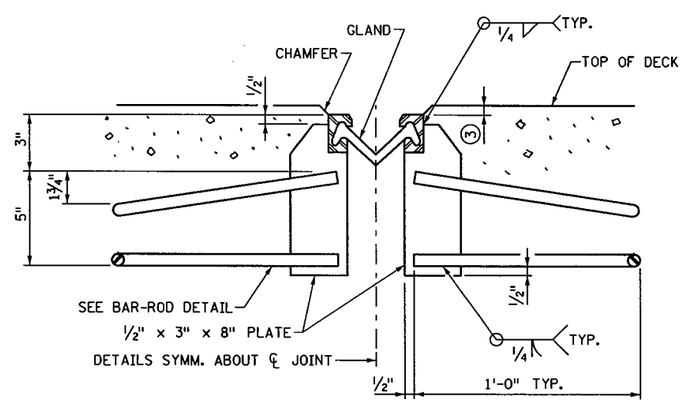

SECTION A-A

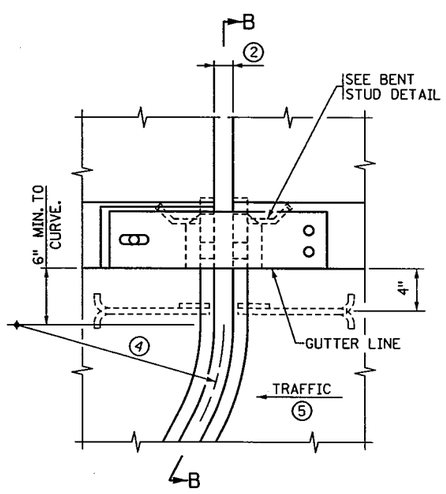

PLAN VIEW @ EXPANSION DEVICE

WITH CURVED DEVICE ALTERNATE

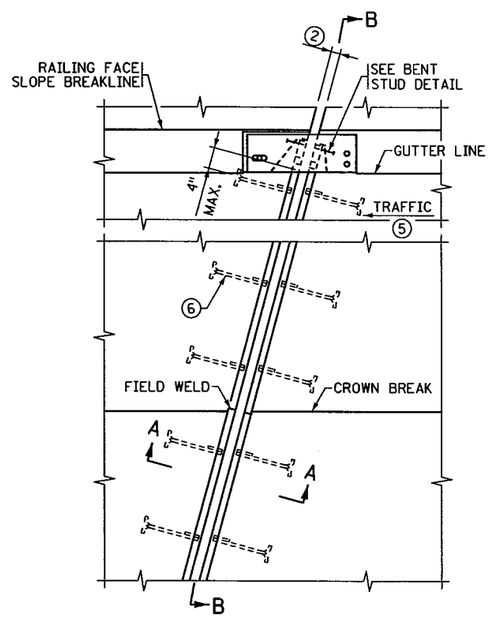

PLAN VIEW @ EXPANSION DEVICE

WITH STRAIGHT DEVICE

GENERAL NOTES

GALVANIZE STRUCTURAL STEEL AFTER FABRICATION AS PER Mn/DOT SPEC. 3394. GALVANIZE FASTENERS AS PER Mn/DOT SPEC. 3392.

JOINTS IN EXTRUSION SHALL BE LOCATED AT BREAKS IN TRANSVERSE PROFILE AND AS OTHERWISE REQUIRED. JOINTS SHALL BE CLOSE FIT AND WELDED. REPAIR AFTER WELDING AS PER Mn/DOT SPEC. 2471.3L.

STRUCTURAL STEEL SHALL COMPLY WITH Mn/DOT SPEC. 3306 OR Mn/DOT SPEC. 3309.

EXPANSION DEVICE SHALL BE STRAIGHTENED TO A TOLERANCE OF 1/8" IN 10 FT.

CAP SCREWS SHALL BE COUNTERSUNK 1/16" BELOW TOP OF PLATE.

LENGTH OF PAYMENT FOR DEVICE IS FROM OUT TO OUT OF EXTRUSION ALONG CENTERLINE OF JOINT.

1. DIMENSIONS ARE ALONG CENTERLINE OF JOINT.
2. 2" @ ALL TEMPS.
3. 1/8" (1/4" MAX.). 1/2" (5/8" MAX.) WHEN SNOWPLOW FINGERS ARE USED. SNOWPLOW FINGERS ARE REQUIRED FOR SKEWS OVER 15° AND LESS THAN 50°.
4. SEE SUPERSTRUCTURE DETAILS FOR RADIUS.
5. SEE SHEET NO. 1 FOR DIRECTION OF TRAFFIC.
6. PLACE BAR-ROD NORMAL TO JOINT ON NEW BRIDGES AND JOINT REPLACEMENTS. ON JOINT REPLACEMENTS WHEN SKEW IS OVER 15° AND LESS THAN 50° BEND RODS PARALLEL TO ℄ ROADWAY.
7. USE THE LARGEST SINGLE PIECE POSSIBLE. USE OF SMALL PIECES OR SCRAPS SECURED TOGETHER IS PROHIBITED.

REVISION: 02-23-2011

APPROVED: NOVEMBER 6, 1995

Donald J. Flemming
STATE BRIDGE ENGINEER

S.P. NO. 1901-148 (T.H. 13=117), S.P. NO. 019-605-028, S.P. NO. 179-020-031

CERTIFIED BY Todd R. Stevens 7/9/12
LICENSED PROFESSIONAL ENGINEER DATE
NAME: TODD R. STEVENS LIC. NO. 21312

TITLE: WATERPROOF EXPANSION DEVICE (WITH TYPE F BARRIER)

DES: P.D.G.	DR: N.A.	APPROVED: MODIFIED 7-9-12
CHK: G.B.B.	CHK: T.R.S.	

SHEET NO. 72 OF 91 SHEETS

BRIDGE NO. 19036

FILENAME: IP_PWP:d1453300V9036.dgn
TIME: 7:43:52 AM
PLOTTED: 09-JUL-2012
PATH & FILENAME: Bridge/Final_Design/1/19036/Cadd-Plan/19036.dgn

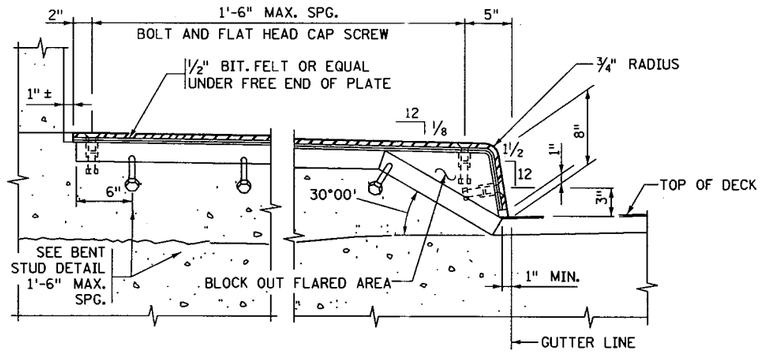

SECTION THROUGH SIDEWALK - OPTION 1

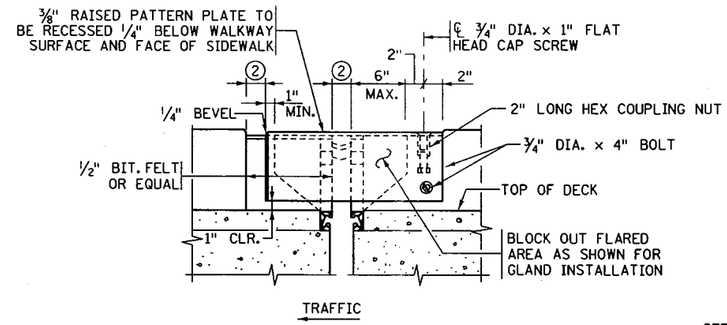

ELEVATION

SIDEWALK DETAILS

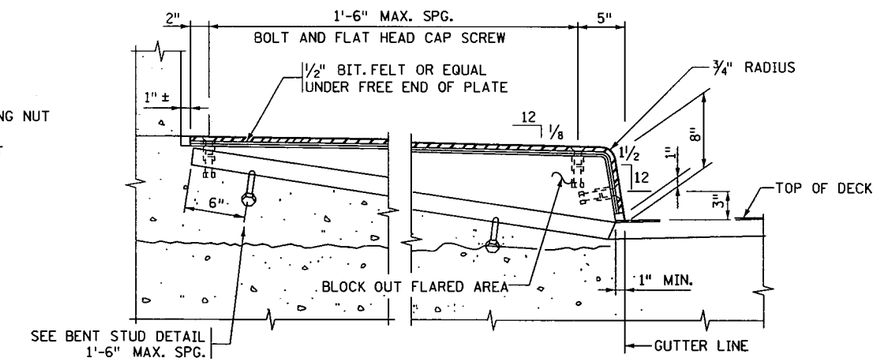

SECTION THROUGH SIDEWALK - OPTION 2

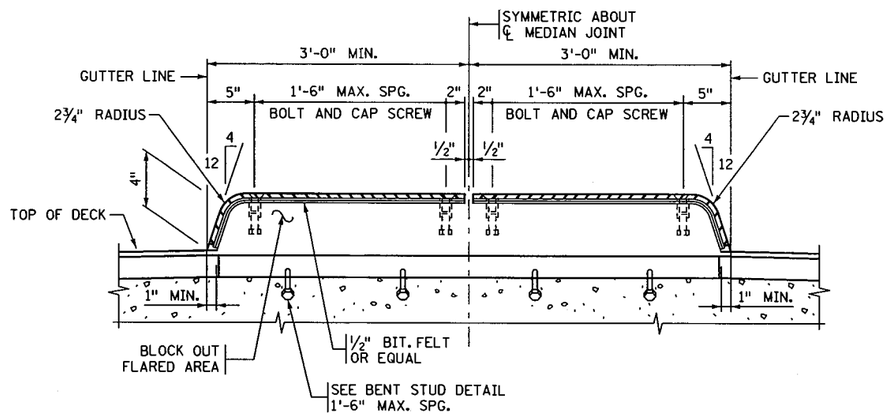

MEDIAN SECTION

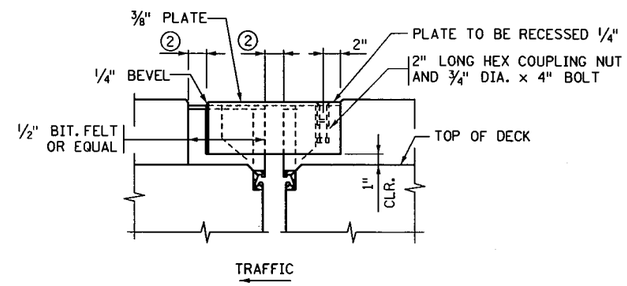

MEDIAN ELEVATION

NOTES:

SEE DETAIL 5-397.627 FOR ADDITIONAL DETAILS AND NOTES.

SEE PREVIOUS SHEET FOR DETAIL "B".

1. DIMENSIONS ARE ALONG CENTERLINE OF JOINT.
2. 2" @ ALL TEMPS
3. ELEVATION SHOWN REFLECTS APPROPRIATE DROP TO TOP OF EXPANSION JOINTS AT SIDEWALK/BARRIER INTERFACE.

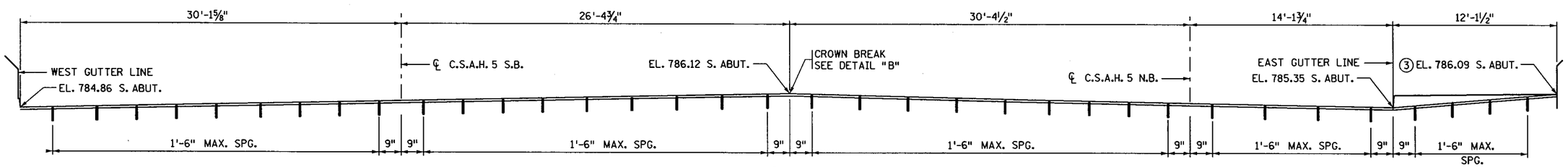

SECTION B-B ~ ALONG ℄ JOINT SOUTH ABUTMENT

ELEVATIONS SHOWN ARE 1/8" BELOW TOP OF SLAB @ ℄ JOINT

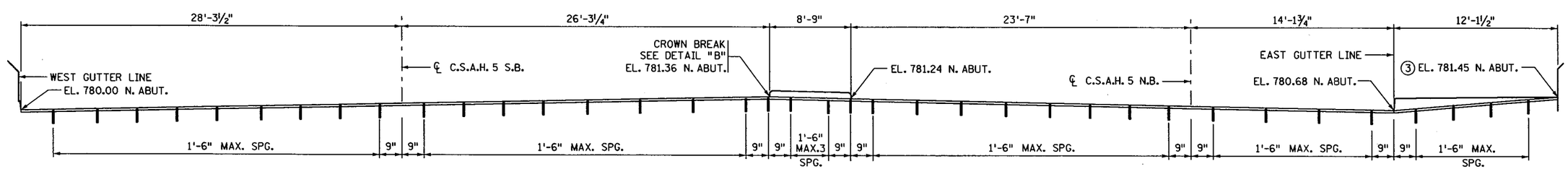

SECTION B-B ~ ALONG ℄ JOINT NORTH ABUTMENT

ELEVATIONS SHOWN ARE 1/8" BELOW TOP OF SLAB @ ℄ JOINT UNLESS OTHERWISE NOTED

MODIFICATION: SECTION B-B PLACED ON THIS SHEET INSTEAD OF 5-397.627

FIG. 5-397.630 MODIFIED

REVISION: 10-28-2008

APPROVED: SEPTEMBER 26, 2003

STATE BRIDGE ENGINEER

S.P. NO. 1901-148 (T.H. 13=117), S.P. NO. 019-605-028, S.P. NO. 179-020-031

CERTIFIED BY Todd R. Stevens 7/9/12
LICENSED PROFESSIONAL ENGINEER DATE
NAME: TODD R. STEVENS LIC. NO. 21312

TITLE: WATERPROOF EXPANSION DEVICE (WITH RAISED MEDIAN & SIDEWALK)

DES:	P.D.G.	DR:	N.A.
CHK:	G.B.B.	CHK:	T.R.S.

APPROVED: 7-9-12

SHEET NO. 73 OF 91 SHEETS

BRIDGE NO. 19036

FILENAME: IP_PWP-d1453300\90036.dgn
TIME : 7:44:22 AM
PLOTTED : 09-JUL-2012
PATH & FILENAME: Bridge/Final_Design/1/19036/Cadd-Plan/19036.dgn
dgnfilename
mmddyy

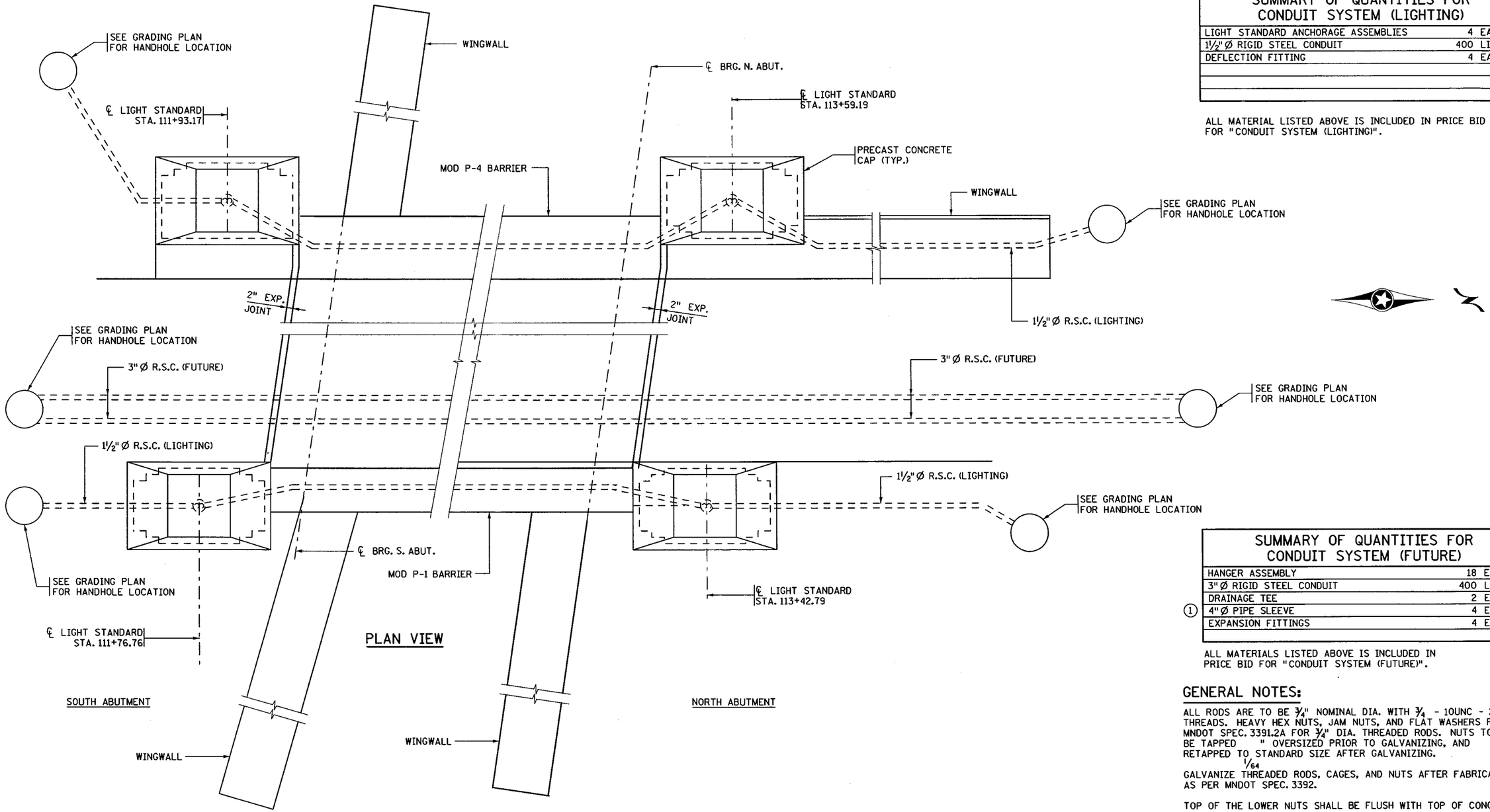

SUMMARY OF QUANTITIES FOR CONDUIT SYSTEM (LIGHTING)

LIGHT STANDARD ANCHORAGE ASSEMBLIES	4 EACH
1½"Ø RIGID STEEL CONDUIT	400 LIN. FT.
DEFLECTION FITTING	4 EACH

ALL MATERIAL LISTED ABOVE IS INCLUDED IN PRICE BID FOR "CONDUIT SYSTEM (LIGHTING)".

SUMMARY OF QUANTITIES FOR CONDUIT SYSTEM (FUTURE)

	HANGER ASSEMBLY	18 EACH
	3"Ø RIGID STEEL CONDUIT	400 LIN. FT.
	DRAINAGE TEE	2 EACH
(1)	4"Ø PIPE SLEEVE	4 EACH
	EXPANSION FITTINGS	4 EACH

ALL MATERIALS LISTED ABOVE IS INCLUDED IN PRICE BID FOR "CONDUIT SYSTEM (FUTURE)".

GENERAL NOTES:

ALL RODS ARE TO BE ¾" NOMINAL DIA. WITH ¾ - 10UNC - 2A THREADS. HEAVY HEX NUTS, JAM NUTS, AND FLAT WASHERS PER MNDOT SPEC. 3391.2A FOR ¾" DIA. THREADED RODS. NUTS TO BE TAPPED 1/64" OVERSIZED PRIOR TO GALVANIZING, AND RETAPPED TO STANDARD SIZE AFTER GALVANIZING.

GALVANIZE THREADED RODS, CAGES, AND NUTS AFTER FABRICATION AS PER MNDOT SPEC. 3392.

TOP OF THE LOWER NUTS SHALL BE FLUSH WITH TOP OF CONCRETE PILASTER.

SUBSTITUTE MATERIALS PER MnDOT SPEC. 1605.

THE CONDUIT SHALL COMPLY WITH SPEC. 3803.

LIGHT POLES TO BE FURNISHED AND INSTALLED BY OTHERS.

APPROXIMATE QUANTITIES FOR "CONDUIT SYSTEM (LIGHTING)" AND "CONDUIT SYSTEM (FUTURE)" ARE AS SHOWN. ANY ADDITIONAL MINOR ITEMS AND SLIGHT CHANGES IN THE QUANTITIES REQUIRED SHALL BE FURNISHED BY THE CONTRACTOR WITH NO ADDITIONAL COMPENSATION.

(1) SEE ABUTMENT SHEETS.

S.P. NO. 1901-148 (T.H. 13=117), S.P. NO. 019-605-028, S.P. NO. 179-020-031

CERTIFIED BY Todd R. Stevens 7/9/12
LICENSED PROFESSIONAL ENGINEER DATE
NAME: TODD R. STEVENS LIC. NO. 21312

TITLE: CONDUIT SYSTEM (LIGHTING) AND FUTURE FIBER OPTICS

DES: GBB	DR: RLV	APPROVED: 7-9-12	BRIDGE NO. 19036
CHK: PDG	CHK: TRS	SHEET NO. 74 OF 91 SHEETS	

TIME : 10:59:07 AM
PLOTTED : 09-JUL-2012
PATH & FILENAME: Bridge/Final_Design/1/19036/Cadd-Plan/bri9036_sys.dgn
FILENAME: IP_PWP:dl453300\bri9036_sys.dgn

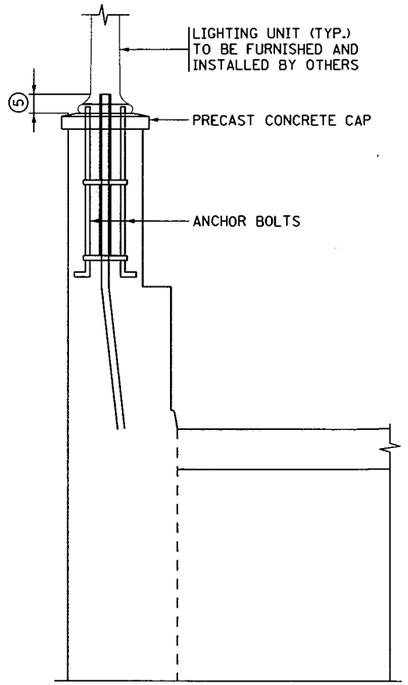

PART SECTION @ PILASTER

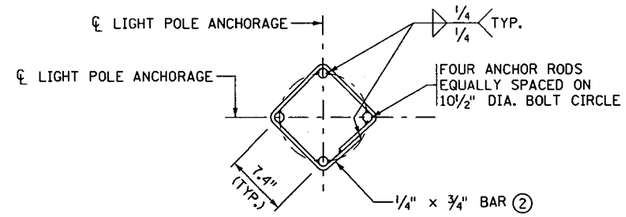

PLAN

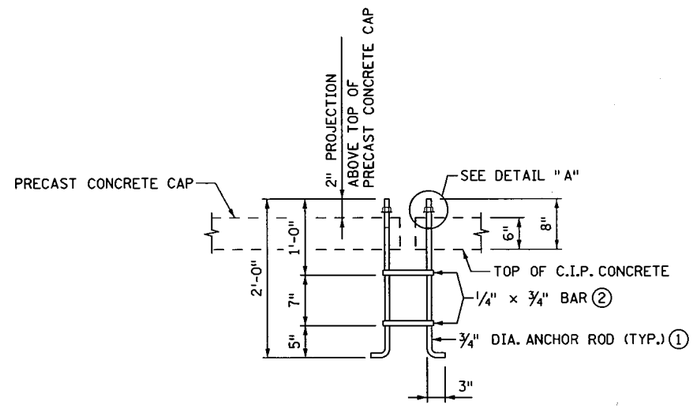

ELEVATION

LIGHT STANDARD ANCHORAGE BOLT CLUSTER

(TYPICAL @ ABUTMENT PILASTERS)

GENERAL NOTES:

ALL RODS ARE TO BE 3/4" NOMINAL DIA. WITH 3/4 - 10UNC - 2A THREADS. HEAVY HEX NUTS, JAM NUTS, AND FLAT WASHERS PER MNDOT SPEC. 3391.2A FOR 3/4" DIA. THREADED RODS. NUTS TO BE TAPPED 1/64" OVERSIZED PRIOR TO GALVANIZING, AND RETAPPED TO STANDARD SIZE AFTER GALVANIZING.

GALVANIZE THREADED RODS, CAGES, AND NUTS AFTER FABRICATION AS PER MNDOT SPEC. 3392.

TOP OF THE LOWER NUTS SHALL BE FLUSH WITH TOP OF CONCRETE PILASTER.

SUBSTITUTE MATERIALS PER MnDOT SPEC. 1605.

THE CONDUIT SHALL COMPLY WITH SPEC. 3803.

LIGHT POLES TO BE FURNISHED AND INSTALLED BY OTHERS.

THE SUMMARY OF QUANTITIES FOR "CONDUIT SYSTEM (LIGHTING)" IS AS SHOWN. ANY ADDITIONAL MINOR ITEMS AND SLIGHT CHANGES IN THE QUANTITIES REQUIRED SHALL BE FURNISHED BY THE CONTRACTOR WITH NO ADDITIONAL COMPENSATION.

1. THREADED RODS, STEEL AS PER MnDOT SPEC. 3309, 3310, OR 3385 TYPE B (4 REQUIRED PER ANCHORAGE).
2. PROVIDE A WELDED CAGE FOR ROD ALIGNMENT. STEEL AS PER MnDOT SPEC. 3306 (2 REQUIRED PER ANCHORAGE).
3. HEAVY HEX NUTS FOR 3/4" DIA. RODS (4 REQUIRED PER ANCHORAGE).
4. FLAT WASHERS FOR 3/4" DIA. RODS (4 REQUIRED PER ANCHORAGE).
5. THE 1 1/2" Ø R.S.C. SHALL EXTEND 3" BEYOND PRECAST CONCRETE CAP AND BE CAPPED.

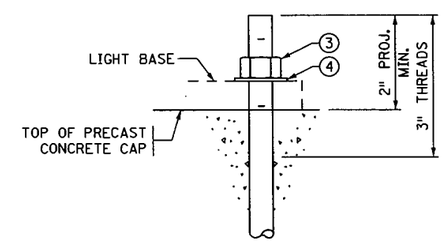

DETAIL "A"

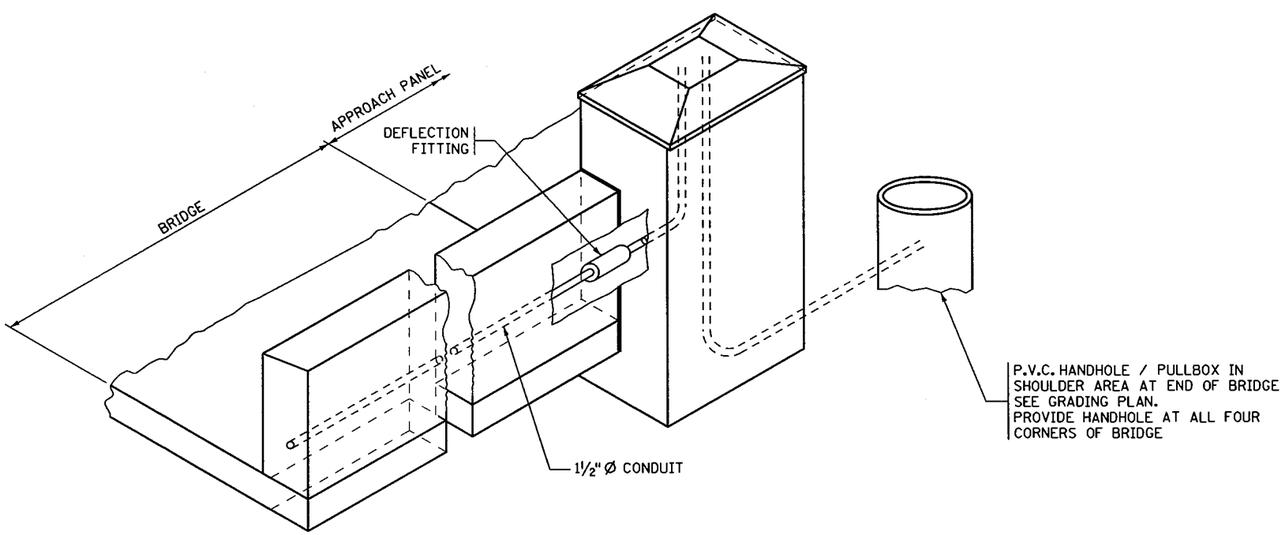

VIEW AT END OF BRIDGE

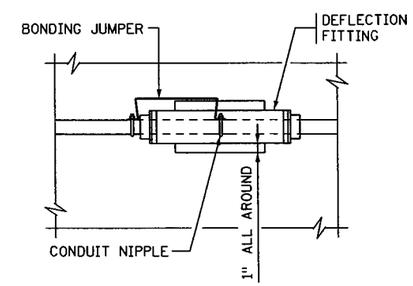

DEFLECTION FITTING

S.P. NO. 1901-148 (T.H. 13=117), S.P. NO. 019-605-028, S.P. NO. 179-020-031

CERTIFIED BY Todd R. Stevens 7/9/12
LICENSED PROFESSIONAL ENGINEER DATE
NAME: TODD R. STEVENS LIC. NO. 21312

TITLE: CONDUIT SYSTEM (LIGHTING)

DES: GBB	DR: RLV	APPROVED: 7-9-12
CHK: PDG	CHK: TRS	

SHEET NO. 75 OF 91 SHEETS

BRIDGE NO. 19036

FILENAME: IP_PWP-d1453300\br19036_sys.dgn
TIME : 10:59:18 AM
PLOTTED : 09-JUL-2012
PATH & FILENAME: Bridge/Final_Design/1/19036/Cadd-Plan/br19036_sys.dgn

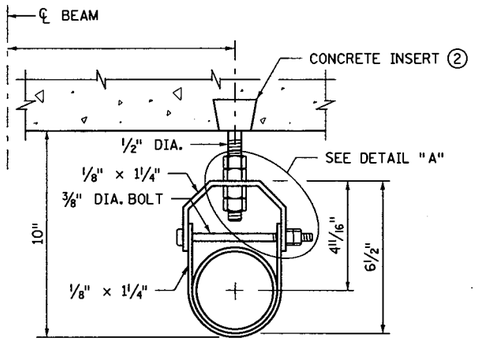

CONDUIT HANGER DETAIL

(FOR SIGNAL CONDUIT SYSTEM)

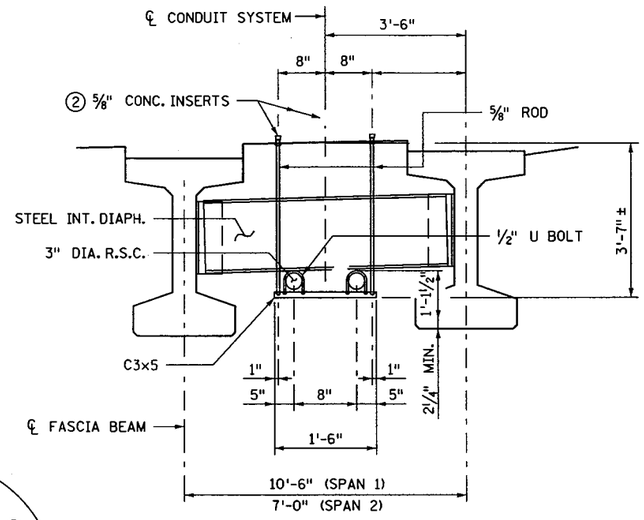

TRANSVERSE SECTION

(FOR FUTURE CONDUIT SYSTEM)

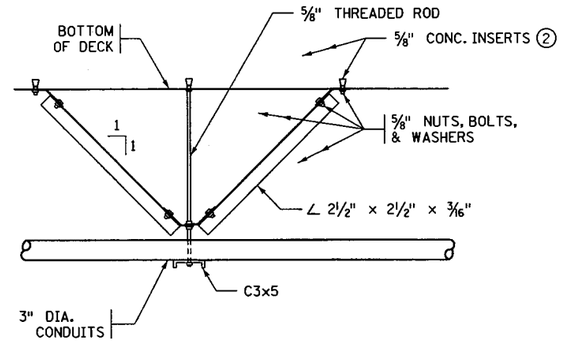

CENTERING DEVICE DETAIL - SIDE VIEW

(LOCATED ONLY ON A HANGER ADJACENT TO PIER)

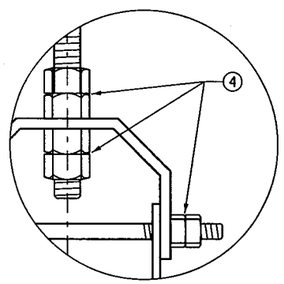

DETAIL "A"

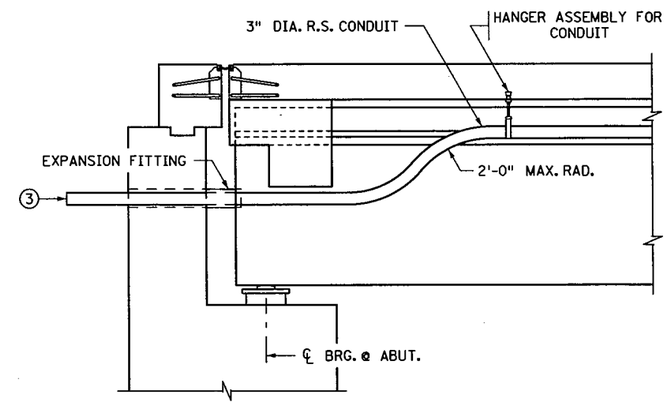

LONGITUDINAL SECTION

(FOR FUTURE CONDUIT SYSTEM)

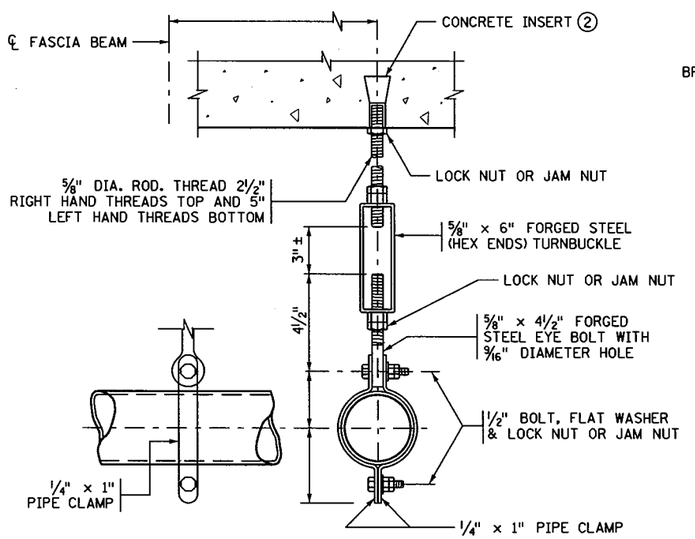

HANGER ASSEMBLY

EACH HANGER ASSEMBLY SHALL CONSIST OF CONCRETE INSERT, 5/8" DIA. ROD, PIPE CLAMPS, NUTS, BOLTS, WASHERS, TURNBUCKLE AND EYE BOLT

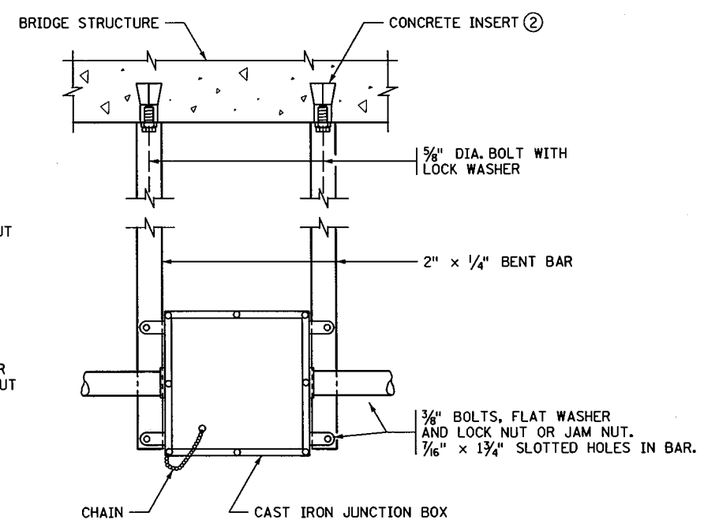

JUNCTION BOX DETAILS

GENERAL NOTES

RODS, EYE BOLTS AND PIPE CLAMPS SHALL COMPLY WITH SPEC. 3313, TYPE I.

TURNBUCKLES AND EYE BOLTS SHALL COMPLY WITH A.S.T.M. A235 CLASS A MINIMUM REQUIREMENTS.

FLAT BARS AND ANCHORAGES SHALL COMPLY WITH SPEC. 3306.

CONCRETE INSERTS SHALL BE APPROVED TYPE MALLEABLE IRON. MATERIAL AS PER SPEC. 3324, GRADE 35018. TAP AFTER GALVANIZING.

GALVANIZE BOLTS, NUTS, WASHERS, TURNBUCKLES, RODS, EYE BOLTS, AND INSERTS AS PER SPEC. 3392. GALVANIZE OTHER MATERIAL AS PER SPEC. 3394 AFTER FABRICATION.

PIPE SLEEVES SHALL COMPLY WITH SPEC. 3362.

② SPACE INSERTS AT 10'-0" MAXIMUM CENTERS.

③ EXTEND TO HANDHOLE.

④ DOUBLE NUTS OR JAM NUTS OR LOCK NUT.

FIG. 5-397.402 MOD

REVISION: 05-24-2012

APPROVED: SEPTEMBER 26, 2003

STATE BRIDGE ENGINEER

S.P. NO. 1901-148 (T.H. 13=117), S.P. NO. 019-605-028, S.P. NO. 179-020-031

CERTIFIED BY Todd R. Stevens 7/9/12
LICENSED PROFESSIONAL ENGINEER DATE
NAME: TODD R. STEVENS LIC. NO. 21312

TITLE: CONDUIT SYSTEM

DES: GBB	DR: RLV	APPROVED: 7-9-12
CHK: PDG	CHK: TRS	

SHEET NO. 76 OF 91 SHEETS

BRIDGE NO. 19036

TIME : 10:59:29 AM
PLOTTED : 09-JUL-2012
PATH & FILENAME: Bridge/Final_Design/1/19036/Cadd-Plan/br19036_sys.dgn
FILENAME: IP_PWP-d1453300\br19036_sys.dgn

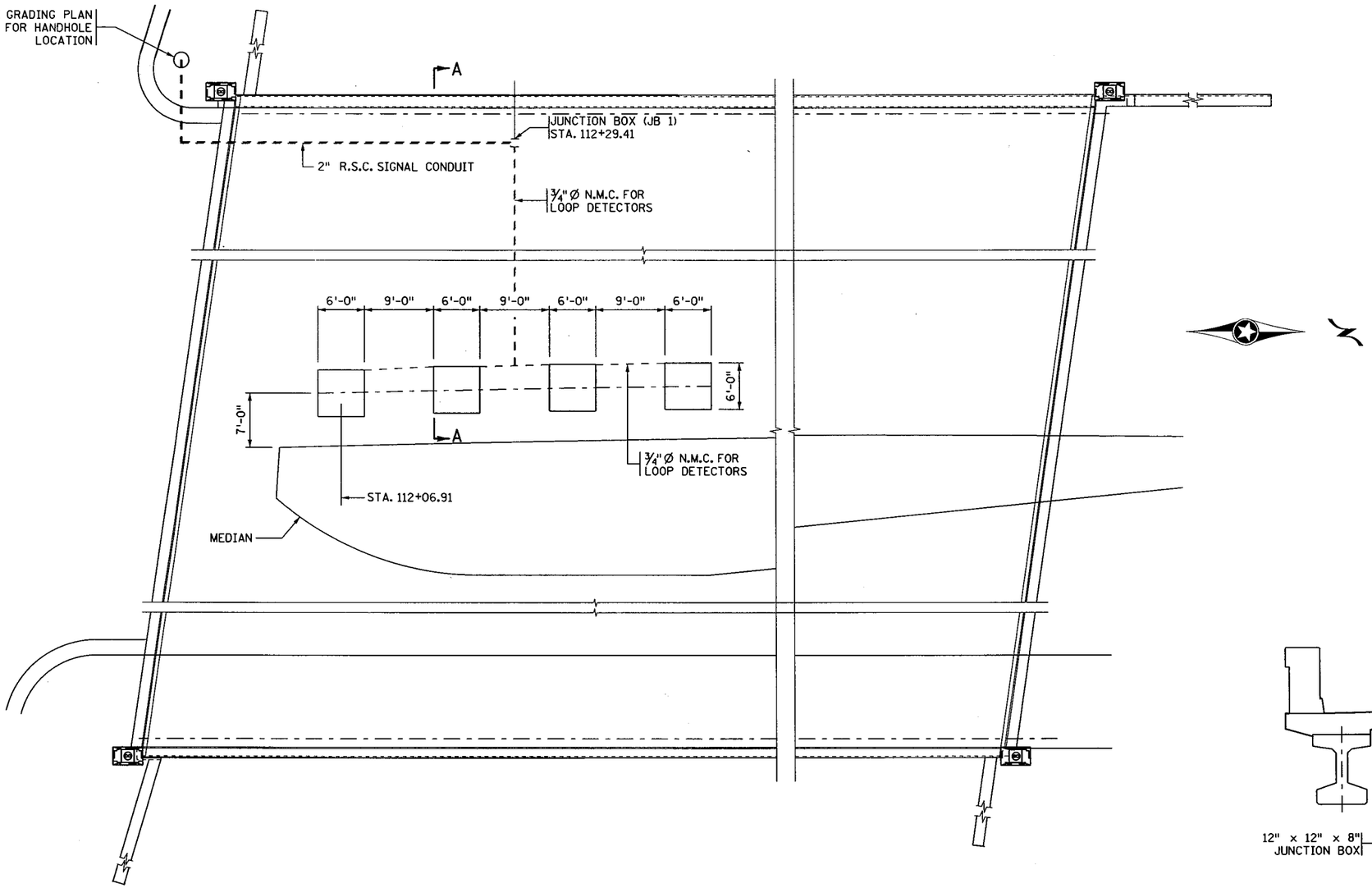

SOUTH ABUTMENT

PARTIAL PLAN VIEW

NORTH ABUTMENT

SUMMARY OF QUANTITIES FOR CONDUIT SYSTEM (SIGNALS)

	HANGER ASSEMBLY	6	EACH
	12" X 12" x 8" JUNCTION BOX & SUPPORTS	1	EACH
	2" DIA. RIGID STEEL CONDUIT	50	LIN. FT.
1	3" PIPE SLEEVE FOR 2" DIA. R.S.C.	1	EACH

ALL MATERIALS LISTED ABOVE ARE INCLUDED IN PRICE BID FOR "CONDUIT SYSTEM (SIGNALS)". ANY ADDITIONAL MINOR ITEMS AND SLIGHT CHANGES IN QUANTITIES REQUIRED SHALL BE FURNISHED BY THE CONTRACTOR WITH NO ADDITIONAL COMPENSATION.

1 SEE ABUTMENT SHEETS FOR LOCATION AND DETAILS.

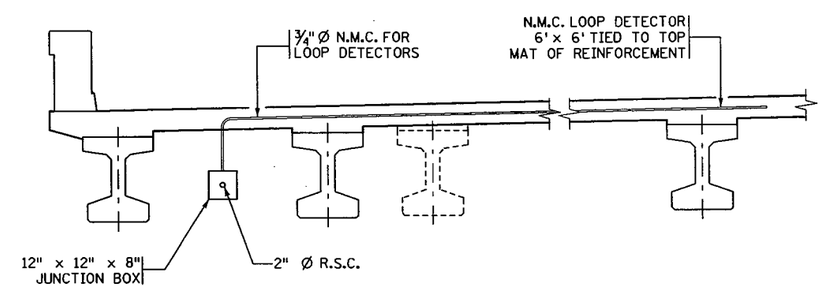

SECTION A-A

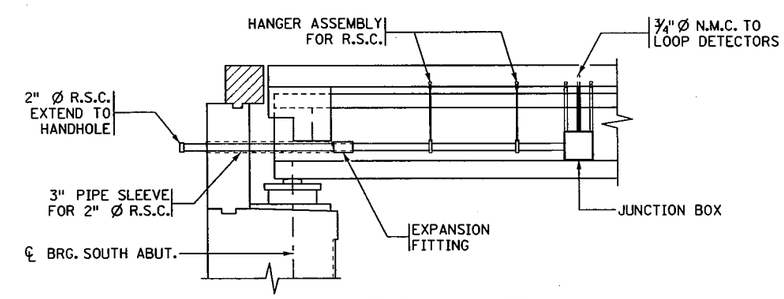

LONGITUDINAL SECTION
FOR CONDUIT SYSTEM (SIGNALS)

S.P. NO. 1901-148 (T.H. 13=117), S.P. NO. 019-605-028, S.P. NO. 179-020-031

CERTIFIED BY Todd R. Stevens 7/9/12
LICENSED PROFESSIONAL ENGINEER DATE
NAME: TODD R. STEVENS LIC. NO. 21312

TITLE: CONDUIT SYSTEM (SIGNALS)

DES: GBB	DR: RLV	APPROVED: 7-9-12	BRIDGE NO. 19036
CHK: PDG	CHK: TRS		
SHEET NO. 77 OF 91 SHEETS			

FILENAME: IP_PWP-d1453300\br19036_sys.dgn
TIME : 10:59:41 AM
PLOTTED : 09-JUL-2012
PATH & FILENAME: Bridge/Final_Design/1/19036/Cadd-Plan/br19036_sys.dgn

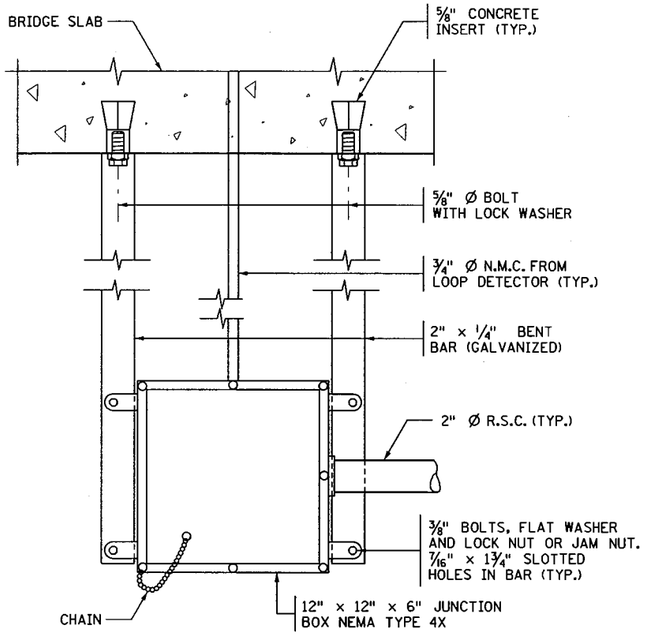

JUNCTION BOX DETAILS

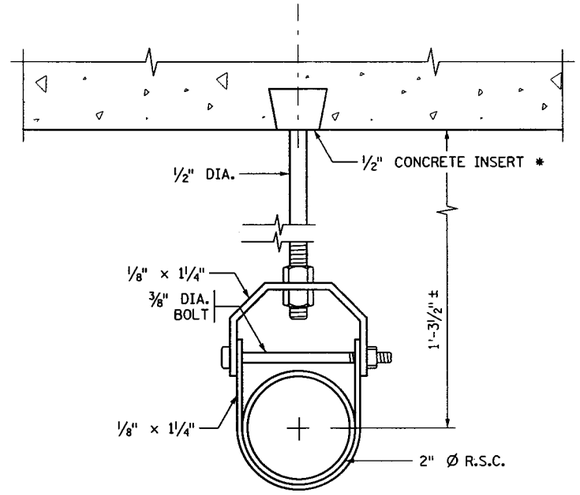

CONDUIT HANGER DETAIL

* SPACE INSERTS AT 10'-0" MAX. CENTERS

NMC LOOP DETECTOR NOTES:

SEE SPECIAL PROVISIONS FOR REQUIRED LOOP DETECTOR, CONNECTORS AND SPLICE KITS.

THE 3/4" NON-METALLIC CONDUIT (NMC) AND FITTINGS SHALL BE SCHEDULE 40 HEAVY WALL RIGID POLYVINYL CHLORIDE (PVC), SEE SPEC. 3803.

THREE CORNERS OF EACH LOOP DETECTOR SHALL BE A 90° FACTORY ELBOW (6" RADIUS). THE FOURTH SHALL BE A NMC TEE CONDULET.

APPROVED PVC PRIMER AND CEMENT SHALL BE USED FOR THE PVC JOINTS.

ALL SLACK MUST BE REMOVED FROM LOOP DETECTOR CONDUCTORS WITHIN THE NMC.

THE LOOP DETECTOR ROADWAY CONDUCTORS (1/C#14) SHALL BE TWISTED NINE TURNS PER YARD FROM THE NMC TEE CONDULET TO THE JUNCTION BOX.

ATTACH A FERROUS METAL ITEM TO THE INTERIOR OF THE TEE CONDULET COVER.

THE LOOP DETECTOR ROADWAY CONDUCTORS SHALL END IN THE JUNCTION BOX.

NO SPLICES ALLOWED IN CONDUIT TO TEE CONDUIT.

THE LOOP DETECTOR ROADWAY CONDUCTORS AND THE LOOP DETECTOR LEAD-IN CABLE CONDUCTORS SHALL BE PROPERLY PREPARED AND CLEANED BEFORE SPLICING.

SPLICE KITS SHALL BE INSTALLED IN JUNCTION BOX IN SUCH A MANNER AS TO ENSURE THAT EACH SPLICE KIT IS SUSPENDED AND/OR SECURED NEAR THE TOP OF THE JUNCTION BOX TO THE SATISFACTION OF THE ENGINEER, (PLACING SPLICE KITS ON TOP OF THE ELECTRICAL CABLES AND CONDUCTORS IS NOT ACCEPTABLE.)

ALL LOOP DETECTORS SHALL HAVE 4 TURNS OF CONDUCTORS.

SEE SHEET 77 FOR LOCATION OF LOOP DETECTORS.

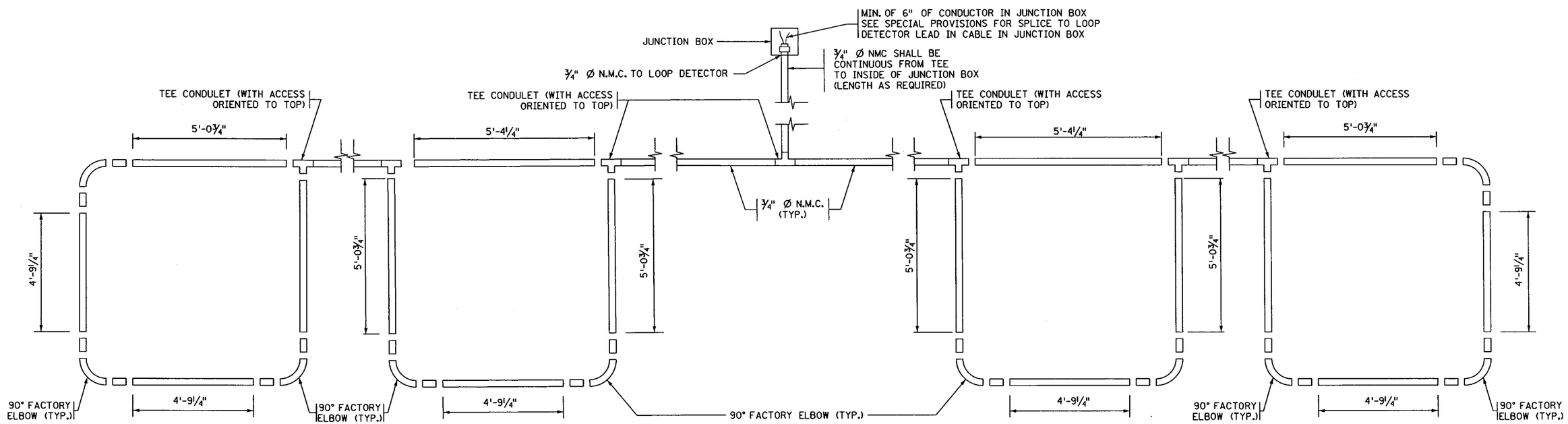

TYP. NMC LOOP DETECTOR DETAIL

FILENAME: IP_PWP-dl453300\br19036_sys.dgn
TIME : 10:59:51 AM
PLOTTED : 09-JUL-2012
PATH & FILENAME: Bridge/Final_Design/1/19036/Cadd-Plan/br19036_sys.dgn

CERTIFIED BY Todd R. Stevens 7/9/12 (LICENSED PROFESSIONAL ENGINEER, DATE) NAME: TODD R. STEVENS LIC. NO. 21312	TITLE: CONDUIT SYSTEM (SIGNALS)	DES: GBB DR: RLV CHK: PDG CHK: TRS	APPROVED: 7-9-12	BRIDGE NO. 19036
S.P. NO. 1901-148 (T.H. 13=117), S.P. NO. 019-605-028, S.P. NO. 179-020-031		SHEET NO. 78 OF 91 SHEETS		

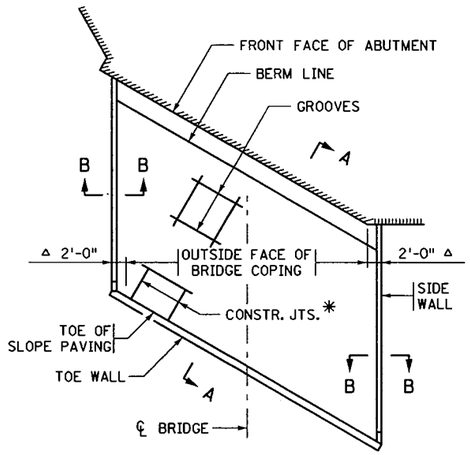

LAYOUT FOR SLOPES 1:2 OR FLATTER

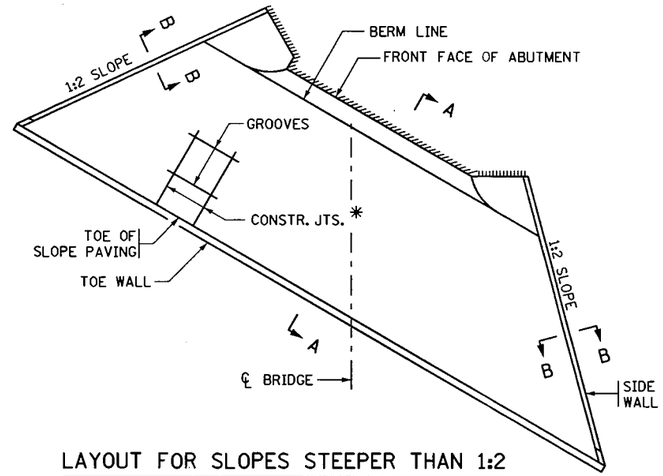

LAYOUT FOR SLOPES STEEPER THAN 1:2

△ 2'-0" FOR TANGENT BRIDGE SUPERSTRUCTURES. VARIES 2'-0" MINIMUM FOR CURVED BRIDGE SUPERSTRUCTURE.

✱ VERTICAL CONSTRUCTION JOINTS MAY BE CONSTRUCTED PARALLEL TO ℄ OF BRIDGE FOR SKEWS TO 10° ONLY.

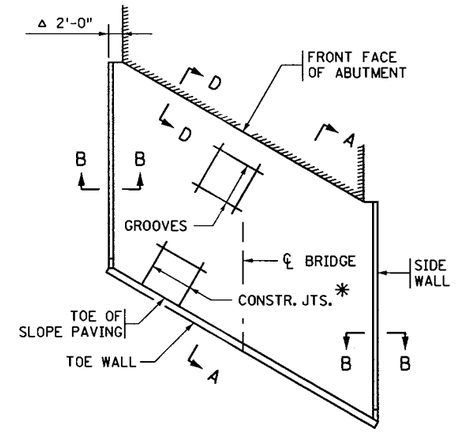

LAYOUT FOR SLOPES AT HIGH ABUTMENTS

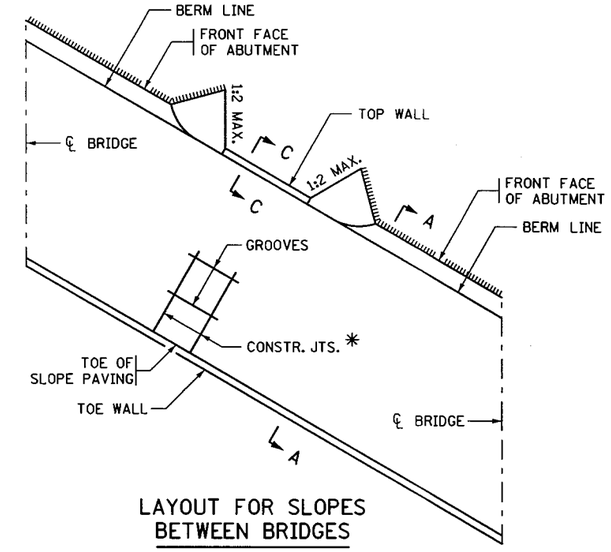

LAYOUT FOR SLOPES BETWEEN BRIDGES

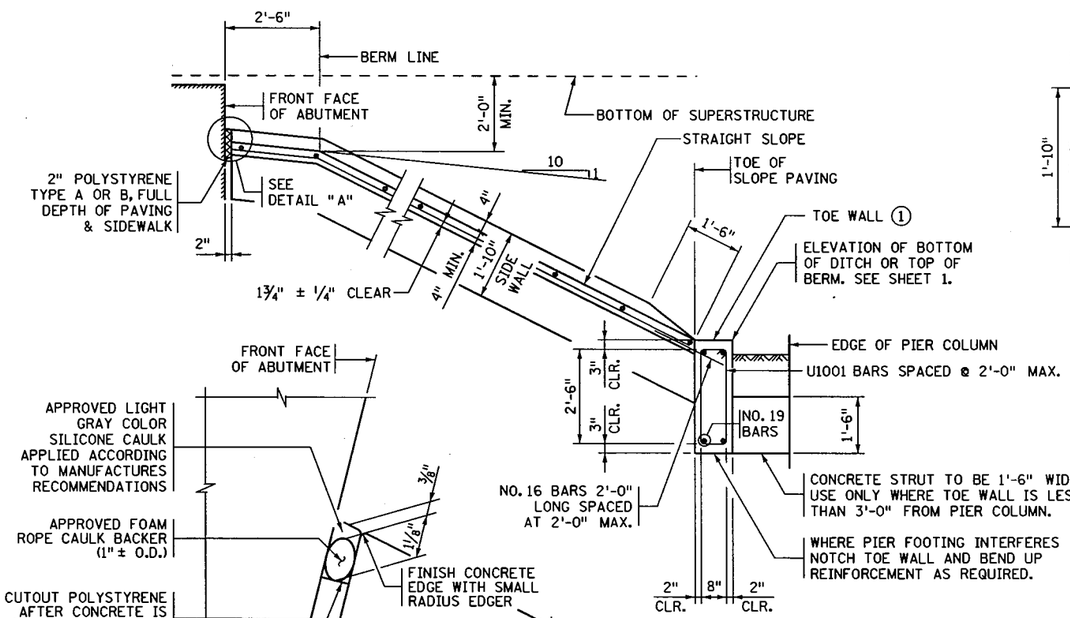

SECTION A-A

1:2 SLOPE SHOWN

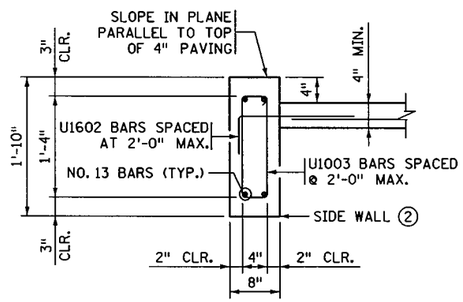

SECTION B-B

NORMAL TO SLOPE

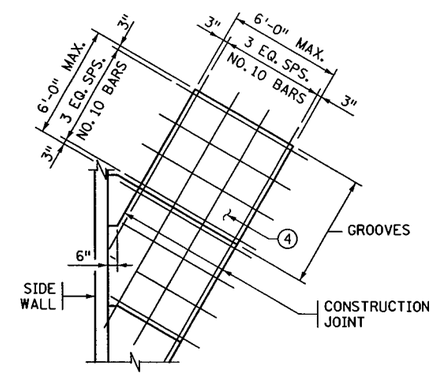

PAVING DETAIL

CONCRETE & REINFORCEMENT UNIT QUANTITIES

① 0.111 CU. YD. OF CONCRETE/LIN. FT.
8.37 LBS. OF REINFORCEMENT/LIN FT.

② 0.046 CU. YD. OF CONCRETE/LIN. FT.
4.46 LBS. OF REINFORCEMENT/LIN FT.

③ 0.058 CU. YD. OF CONCRETE/LIN. FT.
3.70 LBS. OF REINFORCEMENT/LIN FT.
BASED ON A SLOPE OF 1:2.

④ 0.111 CU. YD. OF CONCRETE/SQ. YD.
4.50 LBS. OF REINFORCEMENT/SQ. YD.

GENERAL NOTE

SLOPES ARE EXPRESSED AS A RATIO OF VERTICAL DISTANCE: HORIZONTAL DISTANCE.

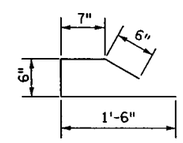

U1304

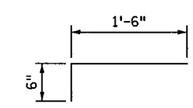

U1602

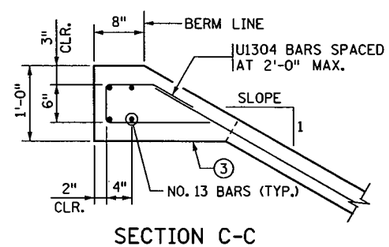

SECTION C-C

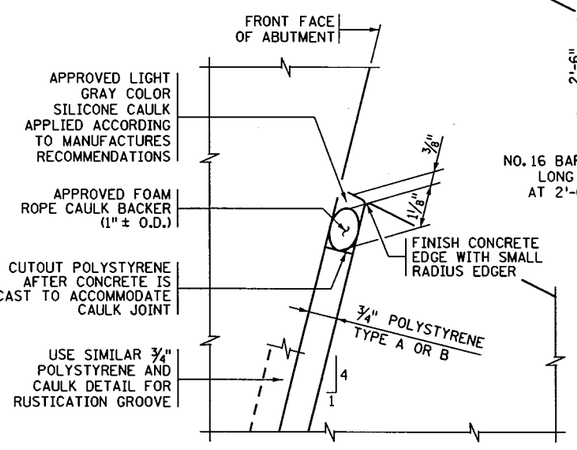

SECTION D-D

HIGH ABUTMENTS WITH RUSTICATION

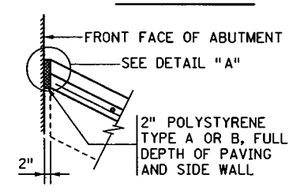

SECTION D-D

HIGH ABUTMENTS WITHOUT RUSTICATION

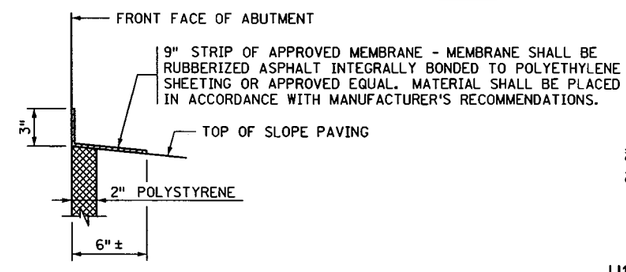

DETAIL "A"

SLOPE PAVING AS PER Mn/DOT SPEC. 2514.

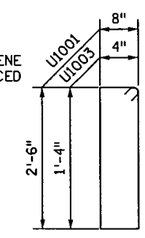

U1001 & U1003

FIG. 5-397.301 MOD

REVISION:

APPROVED: SEPTEMBER 26, 2003
Daniel L. Hagen
STATE BRIDGE ENGINEER

S.P. NO. 1901-148 (T.H. 13=117), S.P. NO. 019-605-028, S.P. NO. 179-020-031

CERTIFIED BY Todd R. Stevens 7/9/12
LICENSED PROFESSIONAL ENGINEER DATE
NAME: TODD R. STEVENS LIC. NO. 21312

TITLE: CONCRETE SLOPE PAVING UNDER BRIDGES

DES:	DR: N.A.	APPROVED: 7-9-12	BRIDGE NO. 19036
CHK:	CHK: T.R.S.		

SHEET NO. 79 OF 91 SHEETS

FILENAME: IP_PWP-d1453300\9036.dgn
TIME : 7:42:25 AM
PLOTTED : 09-JUL-2012
PATH & FILENAME: B:\bridge\Final_Design\1\19036\Cadd-Plan\19036.dgn

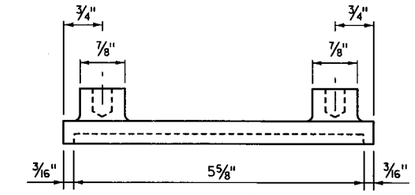

PLAN VIEW

SET NAMEPLATE FLUSH WITH SURFACE OF CONCRETE EXCEPT AT ROUND COLUMNS FOR PIERS.

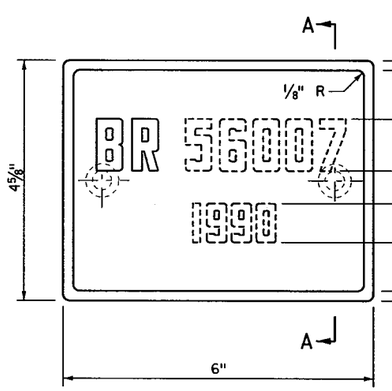

ELEVATION

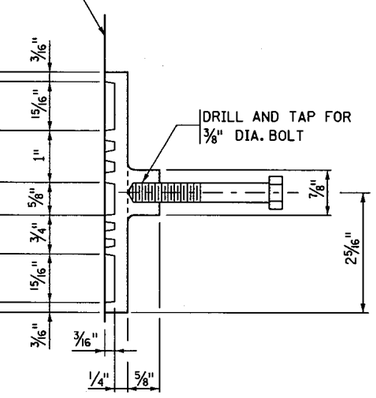

SECTION A-A

THE DASHED NUMBERS SHOWN ABOVE ARE FOR ILLUSTRATION.
DATA TO BE SHOWN ON NAMEPLATE IS AS FOLLOWS:

BRIDGE 19036

YEAR 2013

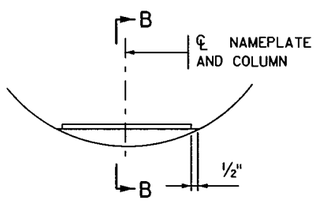

NAMEPLATE PLACEMENT

(ROUND CONCRETE PIER COLUMNS)

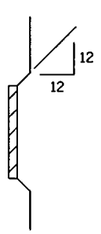

SECTION B-B

NUMBERS FOR NAMEPLATE

NOTES:

NO SHOP DRAWING REQUIRED.

MATERIAL SHALL COMPLY WITH Mn/DOT SPEC. 3327.

LETTERS AND NUMBERS SHALL CONFORM TO THOSE SHOWN.

DRAFT ON LETTERS AND NUMBERS SHALL NOT BE MORE THAN 3" IN 12".

HORIZONTAL SPACING OF LETTERS AND NUMBERS SHALL PRODUCE A BALANCED LAYOUT IN PROPORTION TO SPACING SHOWN.

TOP SURFACE OF LETTERS, NUMBERS AND FRAMES SHALL BE BURNISHED.

FURNISH 2 STEEL BOLTS 3/8" DIA. x 3" LONG WITH EACH PLATE.

ALL DIMENSIONS FOR 3/4" HIGH LETTERS AND NUMBERS SHALL BE IN DIRECT PROPORTION TO THOSE SHOWN FOR THE 1" HIGH LETTERS AND NUMBERS.

APPROVED: NOVEMBER 22, 2002	STATE OF MINNESOTA DEPARTMENT OF TRANSPORTATION	REVISION	DETAIL NO.
Daniel L Dorgan STATE BRIDGE ENGINEER	BRIDGE NAMEPLATE (FOR NEW BRIDGES)		B101

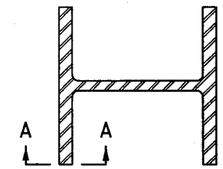

SECTION AT JOINT

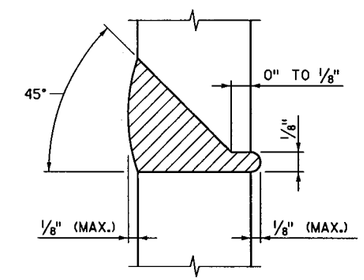

SECTION A-A

100% BUTT WELDED PILE SPLICE

NOTES:

CELLULOSIC TYPE ELECTRODES E-6010 OR E-6011 SHALL BE USED FOR 100% BUTT WELDED SPLICES.

ELECTRODES WHICH HAVE BECOME WET, SOILED OR DAMAGED SHALL NOT BE USED.

WELDING SHALL NOT BE DONE WHEN THE AMBIENT TEMPERATURE IS LOWER THAN 0° F. OR WHEN THE PILE IS WET OR EXPOSED TO FALLING RAIN OR SNOW. WHEN THE PILE METAL TEMPERATURE IS BELOW 32° F., THE PILE METAL IN THE AREA OF THE WELD SHALL BE HEATED TO A MINIMUM TEMPERATURE OF 70° F. AND MAINTAINED AT THIS TEMPERATURE DURING WELDING.

APPROVED: NOVEMBER 22, 2002	STATE OF MINNESOTA DEPARTMENT OF TRANSPORTATION	REVISION	DETAIL NO.
Daniel L Dorgan STATE BRIDGE ENGINEER	PILE SPLICE (STEEL H BEARING PILES 10" TO 14")		B202

S.P. NO. 1901-148 (T.H. 13=117), S.P. NO. 019-605-028, S.P. NO. 179-020-031

CERTIFIED BY Todd R. Stevens 7/9/12
LICENSED PROFESSIONAL ENGINEER DATE
NAME: TODD R. STEVENS LIC. NO. 21312

TITLE: DETAILS

DES:	DR: N.A.	APPROVED: 7-9-12	BRIDGE NO. 19036
CHK:	CHK: T.R.S.		

SHEET NO. 80 OF 91 SHEETS

FILENAME: IP_PWP-d1453300V9036.dgn
TIME : 7:45:19 AM
PLOTTED : 09-JUL-2012
PATH & FILENAME: Bridge/Final_Design/1/19036/Cadd-Plan/19036.dgn

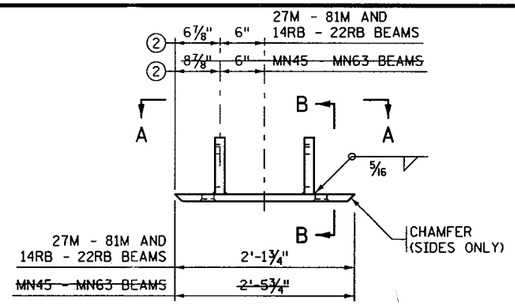

FRONT ELEVATION - OPTION 1

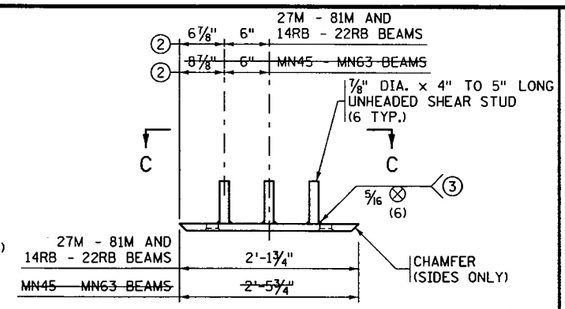

FRONT ELEVATION - OPTION 2

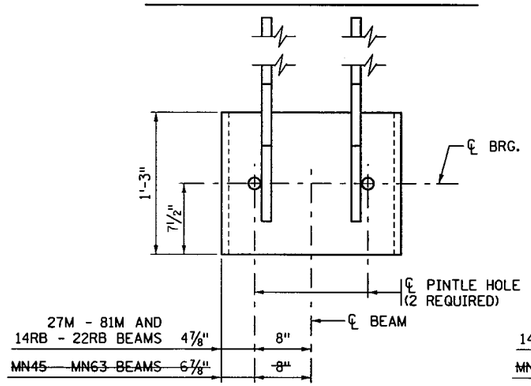

SECTION A-A

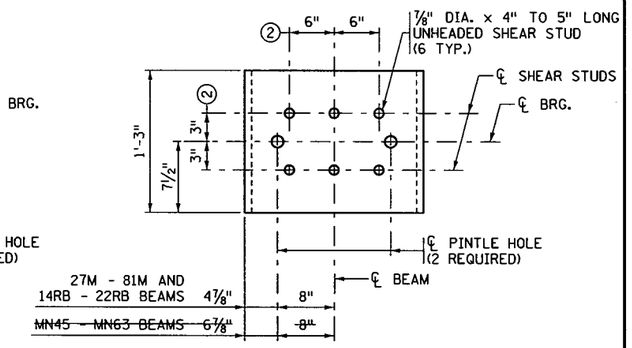

SECTION C-C

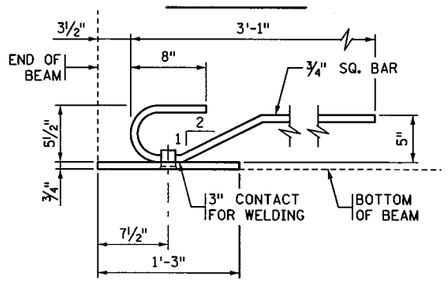

SECTION B-B

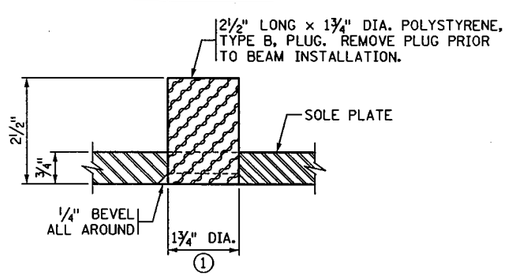

PINTLE HOLE DETAIL

NOTES:

MATERIAL TO BE STRUCTURAL STEEL PER Mn/DOT SPEC. 3306.

WELDED STUDS TO BE WELDABLE CARBON STEEL PER Mn/DOT SPEC. 3391.2D.

SOLE PLATE FOR BEARING ASSEMBLY TO BE GALVANIZED PER Mn/DOT SPEC. 3394 AFTER FABRICATION.

PINTLE HOLES SHALL BE FREE OF ZINC BUILD UP FROM GALVANIZING.

SOLE PLATES ARE INCIDENTAL TO PRESTRESSED CONCRETE BEAMS.

(1) FOR 1½" DIA. PINTLES.

(2) THESE DIMENSIONS MAY BE MODIFIED TO CLEAR PRESTRESSED STRANDS. HOWEVER, CHANGES MUST BE APPROVED BY THE ENGINEER.

(3) THE REQUIREMENTS FOR WELDING STUDS SHALL COMPLY WITH AASHTO/AWS D1.1.

APPROVED: OCTOBER 26, 2005	STATE OF MINNESOTA DEPARTMENT OF TRANSPORTATION	REVISED 06-14-2006 10-28-2008 03-30-2010	DETAIL NO.
Daniel L Dorgan STATE BRIDGE ENGINEER	SOLE PLATE (PRESTRESSED CONCRETE BEAMS) (FOR BEARINGS WITH PINTLES)		B303

S.P. NO. 1901-148 (T.H. 13=117), S.P. NO. 019-605-028, S.P. NO. 179-020-031

CERTIFIED BY Todd R. Stevens 7/9/12
LICENSED PROFESSIONAL ENGINEER DATE
NAME: TODD R. STEVENS LIC. NO. 21312

TITLE: DETAILS

DES:	DR: N.A.	APPROVED: 7-9-12
CHK:	CHK: T.R.S.	

SHEET NO. 81 OF 91 SHEETS

BRIDGE NO. 19036

FILENAME: IP_PWP:d1453300V9036.dgn
TIME : 7:45:40 AM
PLOTTED : 09-JUL-2012
PATH & FILENAME: Bridge/Final_Design/1/19036/Cadd-Plan/19036.dgn

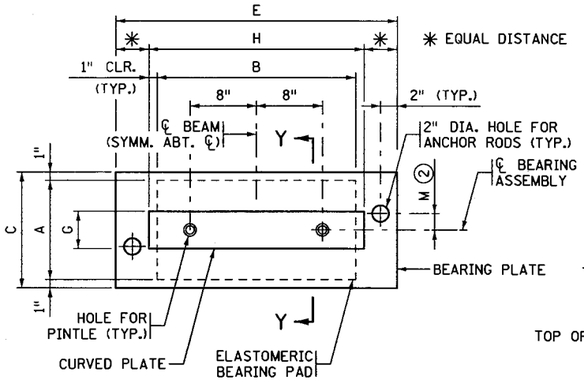

PLAN

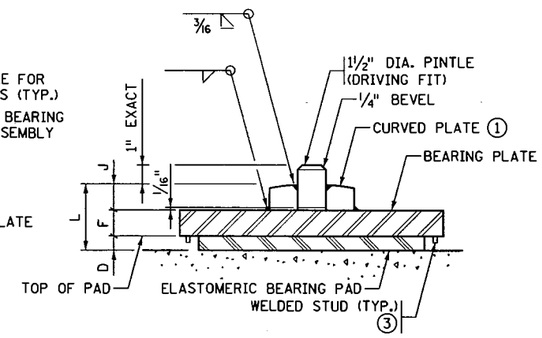

SECTION Y-Y

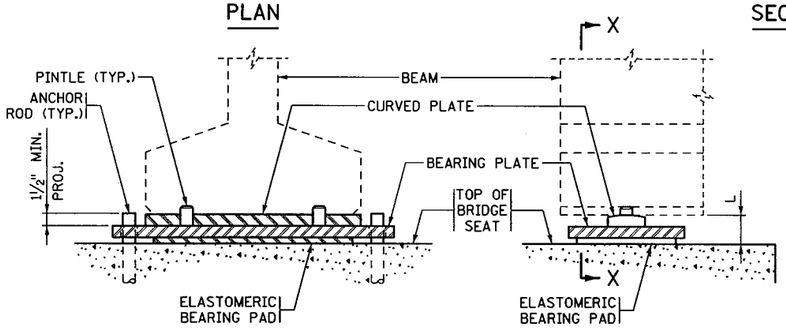

SECTION X-X

2'-2" BOTTOM FLANGE SHOWN

SIDE ELEVATION

ANCHOR RODS NOT SHOWN

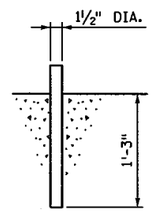

ANCHOR ROD DETAIL

TABLE																
ASSEMBLY TYPE	LOCATION	BEAM SIZE	BEARING PAD SIZE			SHAPE FACTOR	BEARING PLATE SIZE			CURVED PLATE SIZE			ANCHOR ROD OFFSET		ASSY. HEIGHT	CURVED PLATE
			A	B	D		C	E	F	G	H	J	+/- ②	M	L	R ①
F1	PIER	36 M	12"	24"	½"	8.0	14"	34	1½"	4½"	26"	1¼"	-	2⅛"	3¼"	16

NOTES:

ELASTOMERIC MATERIALS AND PAD CONSTRUCTION SHALL COMPLY WITH MnDOT SPEC. 3741.

ALL STEEL PLATES SHALL COMPLY WITH MnDOT SPEC. 3306.

ANCHOR RODS SHALL COMPLY WITH MnDOT SPEC. 3306. GALVANIZE PER MnDOT SPEC. 3394.

PINTLES SHALL COMPLY WITH MnDOT SPEC. 3309.

GALVANIZE STRUCTURAL STEEL BEARING ASSEMBLY AFTER FABRICATION PER MnDOT SPEC. 3394, EXCEPT AS NOTED.

PAYMENT FOR BEARING ASSEMBLY SHALL INCLUDE ALL MATERIAL ON THIS DETAIL.

① THE MIN. RADIUS SHALL BE 16" UNLESS OTHERWISE SPECIFIED IN THE TABLE. THE MAX. RADIUS SHALL BE 24". FINISH TO 250 MICRO. THE FINISHED THICKNESS OF THE PLATE MAY BE 1/16" LESS THAN SHOWN.

② "+" DENOTES OFFSET AS SHOWN.
"−" DENOTES OFFSET OPPOSITE OF SHOWN.

③ 5/16" DIA. × 3/8" KNOCK-OFF WELD STUDS INSTALLED ON BEARING PLATE AROUND PERIMETER OF BEARING PAD. CENTERLINE STUD TO EDGE OF PAD DIMENSION = ½", MAX. STUD SPACING = 4", AND MAX. SPACING TO PAD CORNER = 2".

DESIGN DATA:
MAXIMUM HORIZONTAL LOAD IS 70 KIPS FOR 1½" PINTLES.

APPROVED: SEPTEMBER 22, 2011
Nancy Daubenberger
STATE BRIDGE ENGINEER

STATE OF MINNESOTA
DEPARTMENT OF TRANSPORTATION

CURVED PLATE BEARING ASSEMBLY
(PRESTRESSED CONCRETE BEAMS)
(FIXED)

REVISED | DETAIL NO. B310

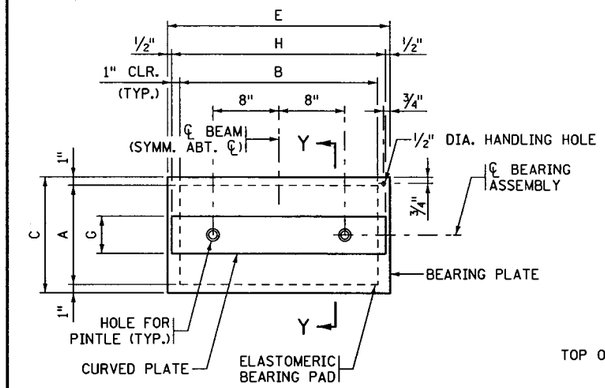

PLAN

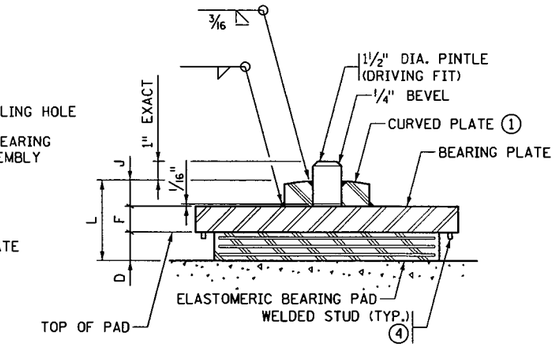

SECTION Y-Y

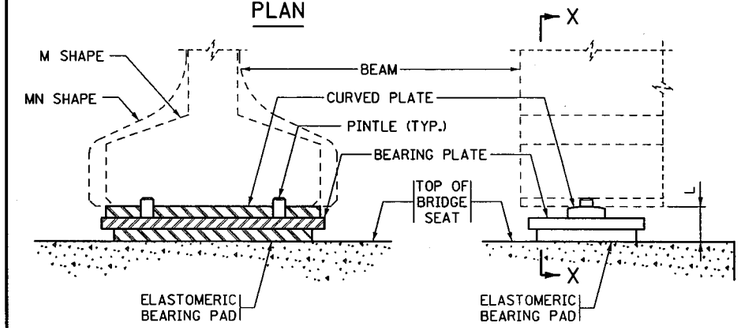

SECTION X-X

SIDE ELEVATION

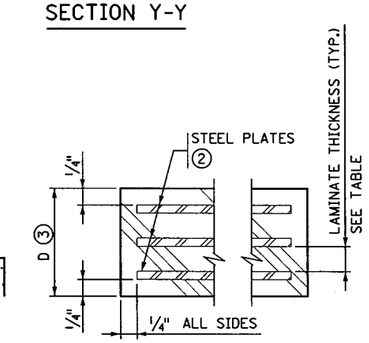

SECTION THROUGH ELASTOMERIC BEARING PAD

TABLE																		
ASSEMBLY TYPE	LOCATION	BEAM SIZE	BEARING PAD SIZE			STEEL PLATES		LAMINATES		SHAPE FACTOR	BEARING PLATE SIZE			CURVED PLATE SIZE			ASSY. HEIGHT	CURVED PLATE
			A	B	D	NO.	THICK.	NO.	THICK.		C	E	F	G	H	J	L	R ①
E1	ABUTS.	36M	12"	24"	2½"	4	⅛"	4	½"	8.0	14"	27"	1½"	4½"	26"	1¼"	5¼	16
E2	PIER	36M	12"	24"	½"					8.0	14"	27"	1½"	4½"	26"	1¼"	3¼"	16

NOTES:

ELASTOMERIC MATERIALS AND PAD CONSTRUCTION SHALL COMPLY WITH MnDOT SPEC. 3741.

ALL STEEL PLATES SHALL COMPLY WITH MnDOT SPEC. 3306.

PINTLES SHALL COMPLY WITH MnDOT SPEC. 3309.

GALVANIZE STRUCTURAL STEEL BEARING ASSEMBLY AFTER FABRICATION PER MnDOT SPEC. 3394, EXCEPT AS NOTED.

PAYMENT FOR BEARING ASSEMBLY SHALL INCLUDE ALL MATERIAL ON THIS DETAIL.

① THE MIN. RADIUS SHALL BE 16" UNLESS OTHERWISE SPECIFIED IN THE TABLE. THE MAX. RADIUS SHALL BE 24". FINISH TO 250 MICRO. THE FINISHED THICKNESS OF THE PLATE MAY BE 1/16" LESS THAN SHOWN.

② DO NOT GALVANIZE THESE PLATES.

③ THE TOTAL THICKNESS SHOWN INCLUDES THE STEEL PLATES.

④ 5/16" DIA. × 3/8" KNOCK-OFF WELD STUDS INSTALLED ON BEARING PLATE AROUND PERIMETER OF BEARING PAD. CENTERLINE STUD TO EDGE OF PAD DIMENSION = ½", MAX. STUD SPACING = 4", AND MAX. SPACING TO PAD CORNER = 2".

DESIGN DATA:
MAXIMUM HORIZONTAL LOAD IS 70 KIPS FOR 1½" PINTLES.

APPROVED: SEPTEMBER 22, 2011
Nancy Daubenberger
STATE BRIDGE ENGINEER

STATE OF MINNESOTA
DEPARTMENT OF TRANSPORTATION

CURVED PLATE BEARING ASSEMBLY
(PRESTRESSED CONCRETE BEAMS)
(EXPANSION)

REVISED | DETAIL NO. B311

CERTIFIED BY Todd R. Stevens 7/9/12
LICENSED PROFESSIONAL ENGINEER DATE
NAME: TODD R. STEVENS LIC. NO. 21312

TITLE: DETAILS

DES: G.B.B. DR: N.A. APPROVED: 7-9-12
CHK: P.D.G. CHK: T.R.S.

SHEET NO. 82 OF 91 SHEETS

BRIDGE NO. 19036

S.P. NO. 1901-148 (T.H. 13=117), S.P. NO. 019-605-028, S.P. NO. 179-020-031

FILENAME: IP_PWP:d1453300V9036.dgn
TIME : 7:46:01 AM
PLOTTED : 09-JUL-2012
PATH & FILENAME: Bridge/Final_Design/1/19036/Cadd-Plan/19036.dgn

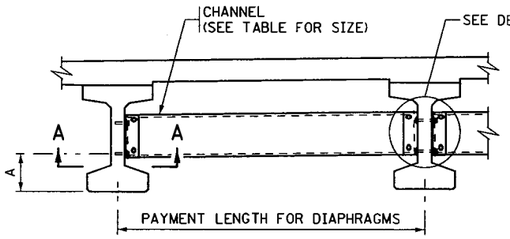

PART TRANSVERSE SECTION AT DIAPHRAGM

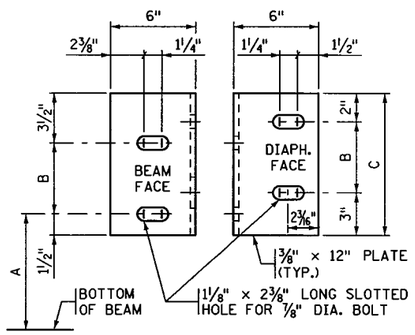

DIAPHRAGM CONNECTION

FOR 36M, 45M AND MN45 BEAMS

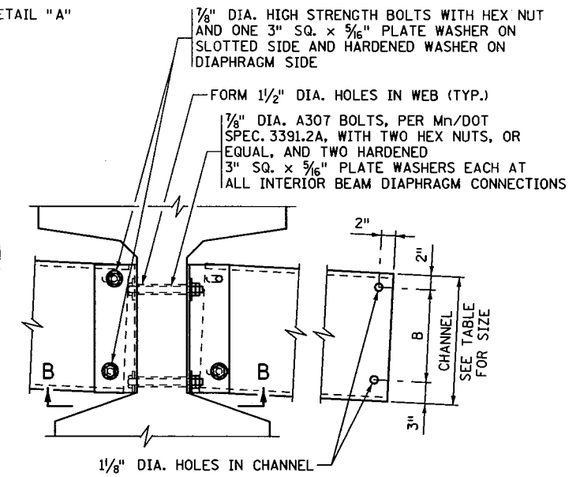

DETAIL "A"

INTERIOR BEAM WITH CONTINUOUS LINE OF DIAPHRAGMS

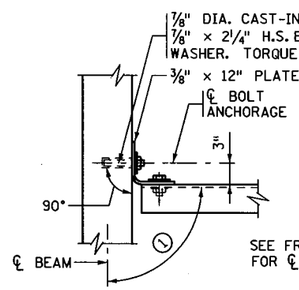

SECTION A-A

TYPICAL SECTION AT ALL FASCIA BEAMS

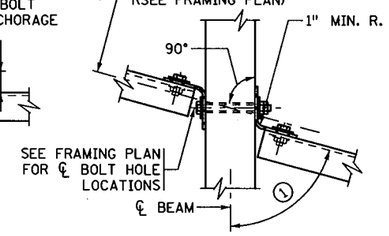

SECTION B-B

TYPICAL SECTION AT INTERIOR BEAM WITH CONTINUOUS OR STAGGERED INTERMEDIATE DIAPHRAGMS

NOTES:

ALL STEEL SHALL CONFORM TO Mn/DOT SPEC. 3306.

INSTALLATION SHALL CONFORM TO Mn/DOT SPEC. 2405.3M.

THE LEG OF THE 12" PLATE SHALL BE SHOP BENT TO CONFORM TO THE DIAPHRAGM. A ⅜" × 6" × 6" ANGLE MAY BE USED FOR DIAPHRAGMS PERPENDICULAR TO BEAMS.

ALL STRUCTURAL STEEL SHOWN ON THIS DETAIL, INCLUDING BOLTS AND WASHERS, SHALL BE INCLUDED IN UNIT PRICE BID FOR DIAPHRAGMS FOR PRESTRESSED BEAMS.

BENT PLATES MAY BE USED IN PLACE OF CHANNELS. THE BENT PLATES MUST BE THE SAME HEIGHT AS THE CHANNELS THEY REPLACE, BE 5/16" IN THICKNESS, AND HAVE LEGS 5" LONG.

STEEL PLATES AND SHAPES SHALL BE GALVANIZED IN ACCORDANCE WITH Mn/DOT SPEC. 3394.

GALVANIZE BOLTS, NUTS AND WASHERS PER Mn/DOT SPEC. 3392.

(1) FOR SKEW ANGLES UNDER 20°, USE 90° LESS THE SKEW ANGLE. FOR SKEW ANGLES OVER 20°, USE 90°.

TABLE				
BEAM HEIGHT	DISTANCE			CHANNEL SIZE
	A	B	C	
36M	1'-3"	7"	1'-0"	C12×20.7

APPROVED: OCTOBER 26, 2005	STATE OF MINNESOTA DEPARTMENT OF TRANSPORTATION	REVISED 06-14-2006 10-22-2009	DETAIL NO.
Daniel L. Dorgan STATE BRIDGE ENGINEER	STEEL INTERMEDIATE DIAPHRAGM (FOR 36M - 54M, MN45 - MN63 PRESTRESSED CONCRETE BEAMS)		B403

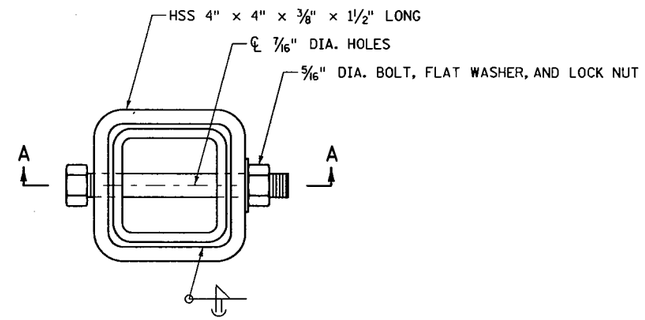

PLAN VIEW

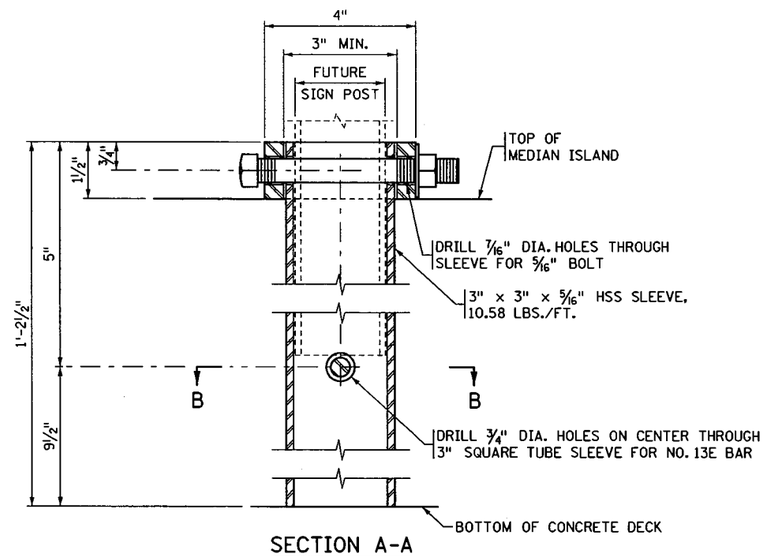

SECTION A-A

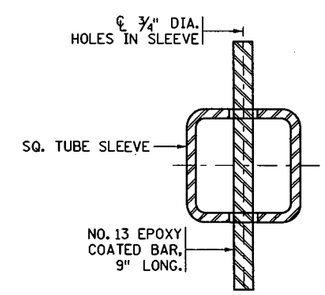

SECTION B-B

NOTES:

GALVANIZE SIGN ANCHOR AFTER FABRICATION AS PER Mn/DOT SPEC. 3394

STRUCTURAL STEEL TUBING AS PER Mn/DOT SPEC. 3361, TYPE A, EXCEPT AS NOTED.

APPROVED: NOVEMBER 22, 2002	STATE OF MINNESOTA DEPARTMENT OF TRANSPORTATION	REVISED 10-05-2006	DETAIL NO.
Daniel L. Dorgan STATE BRIDGE ENGINEER	MEDIAN SIGN POST ANCHOR		B901

S.P. NO. 1901-148 (T.H. 13=117), S.P. NO. 019-605-028, S.P. NO. 179-020-031

CERTIFIED BY Todd R. Stevens 7/9/12 LICENSED PROFESSIONAL ENGINEER DATE
NAME: TODD R. STEVENS LIC. NO. 21312

TITLE: DETAILS

DES:	DR: N.A.	APPROVED: 7-9-12	BRIDGE NO. 19036
CHK:	CHK: G.B.B.		

SHEET NO. 83 OF 91 SHEETS

FILENAME: IP_PWP:d1453300V9036.dgn
TIME : 7:46:20 AM
PLOTTED : 09-JUL-2012
PATH & FILENAME: Bridge/Final_Design/1/19036/Cadd-Plan/19036.dgn

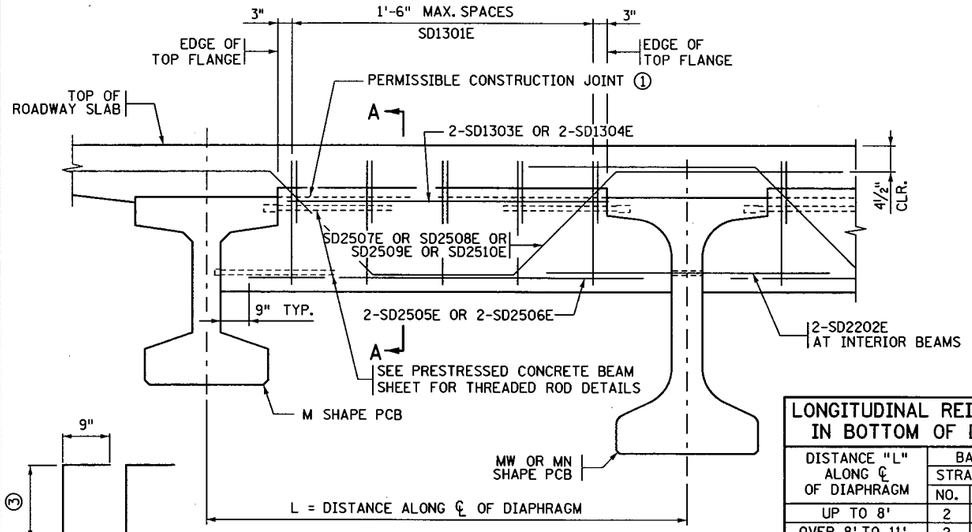

PART TRANSVERSE SECTION

(L > 8' SHOWN)

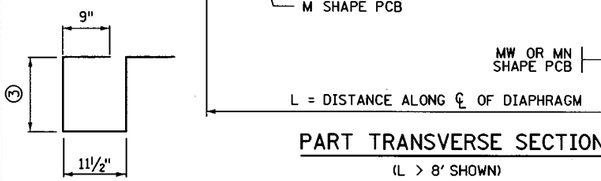

SD1301E

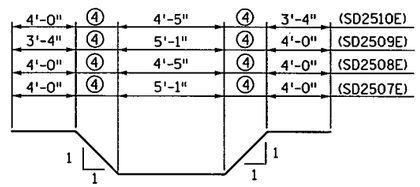

SD2507E OR SD2508E OR SD2509E OR SD2510E

(IF L > 8')

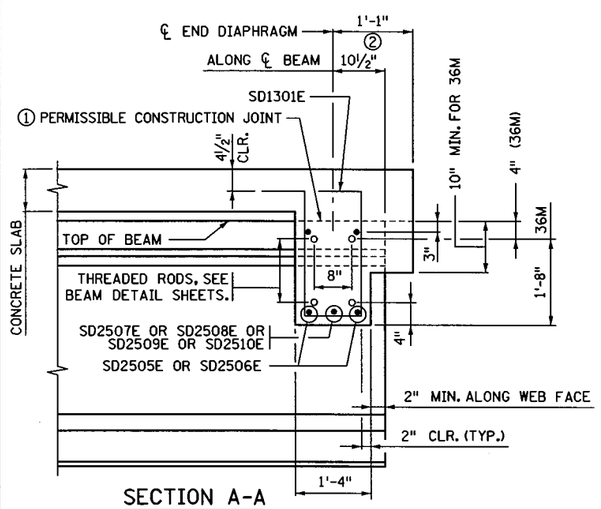

SECTION A-A

(M SHAPE PCB SHOWN)

LONGITUDINAL REINFORCEMENT IN BOTTOM OF DIAPHRAGM				
DISTANCE "L" ALONG ℄ OF DIAPHRAGM	BARS REQUIRED			
	STRAIGHT		BENT	
	NO.	SIZE	NO.	SIZE
UP TO 8'	2	19E	1	16E
OVER 8' TO 11'	2	22E	1	19E
OVER 11' TO 13'	2	25E	1	25E
OVER 13' TO 15'	2	29E	1	32E
OVER 15' TO 18'	2	36E	1	36E

S. ABUT. BILL OF REINFORCEMENT FOR END DIAPHRAGM				
BAR	NO.	LENGTH	SHAPE	LOCATION
SD1301E	70	6'-9"		VERTICAL TIE
SD2202E	18	5'-0"		LONG. THRU BEAM
⑤ SD1303E	16	8'-4"		LONG. TOP
⑥ SD1304E	4	7'-9"		LONG. TOP
⑤ SD2505E	16	9'-4"		LONG. BOTTOM
⑥ SD2506E	4	8'-7"		LONG. BOTTOM
⑤ SD2507E	7	18'-9"		LONG. BOTTOM
⑥ SD2508E	1	18'-1"		LONG. BOTTOM
⑤ SD2509E	1	18'-1"		LONG. BOTTOM
⑥ SD2510E	1	17'-5"		LONG. BOTTOM

NOTES:

CONCRETE FOR END DIAPHRAGMS SHALL BE THE SAME MIX AS USED IN DECK.

QUANTITIES FOR END DIAPHRAGM CONCRETE AND REINFORCEMENT SHOWN ON THIS DETAIL SHALL BE LISTED IN SUPERSTRUCTURE QUANTITIES.

THREADED RODS ARE INCIDENTAL TO PRESTRESSED CONCRETE BEAMS.

① USE OF CONSTRUCTION JOINT REQUIRES CLEARANCE FOR EXPANSION DEVICE. WHEN CONSTRUCTION JOINT IS USED AT THIS LOCATION, DIAPHRAGM FALSEWORK SHALL REMAIN INPLACE UNTIL COMPLETION OF SLAB CURING PERIOD.

② PERPENDICULAR TO CENTERLINE OF DIAPHRAGM.

③ 2'-1" (36M) BASED ON 3" STOOL AND 9" DECK.

④ 2'-0" (36M) BASED ON NOTE ③.

⑤ FOR 11'-1½" BEAM SPACING.

⑥ FOR 10'-6" BEAM SPACING.

SOUTH ABUTMENT

APPROVED: SEPTEMBER 22, 2011	STATE OF MINNESOTA DEPARTMENT OF TRANSPORTATION	REVISED	DETAIL NO.
Nancy Daubenberger STATE BRIDGE ENGINEER	CONCRETE END DIAPHRAGM (36M PRESTRESSED CONCRETE BEAMS) (SOUTH PARAPET ABUTMENT)		B814 MOD

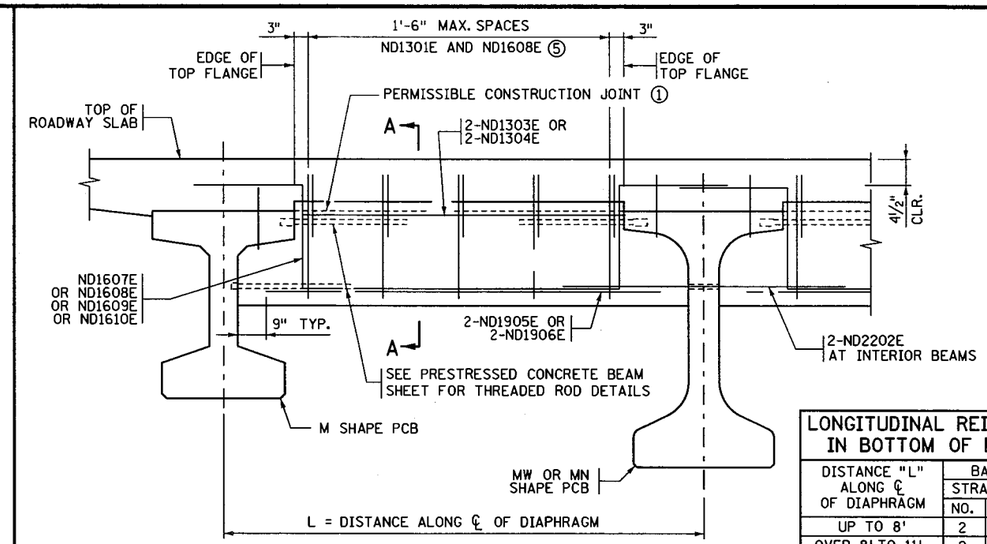

PART TRANSVERSE SECTION

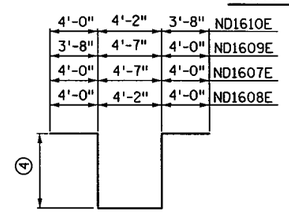

ND1607E OR ND1608E OR ND1609E OR ND1610E

(IF L ≤ 8')

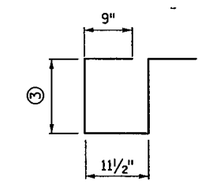

ND1301E

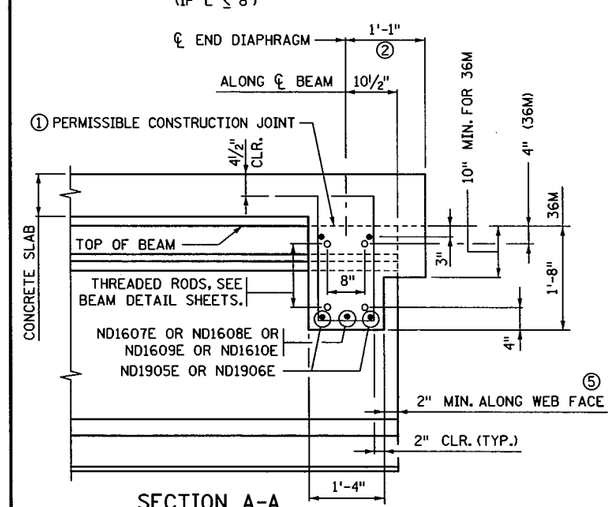

SECTION A-A

(M SHAPE PCB SHOWN)

LONGITUDINAL REINFORCEMENT IN BOTTOM OF DIAPHRAGM				
DISTANCE "L" ALONG ℄ OF DIAPHRAGM	BARS REQUIRED			
	STRAIGHT		BENT	
	NO.	SIZE	NO.	SIZE
UP TO 8'	2	19E	1	16E
OVER 8' TO 11'	2	22E	1	19E
OVER 11' TO 13'	2	25E	1	25E
OVER 13' TO 15'	2	29E	1	32E
OVER 15' TO 18'	2	36E	1	36E

N. ABUT. BILL OF REINFORCEMENT FOR END DIAPHRAGM				
BAR	NO.	LENGTH	SHAPE	LOCATION
ND1301E	75	6'-9"		VERTICAL TIE
ND2202E	28	5'-0"		LONG. THRU BEAM
⑤ ND1303E	24	4'-7"		LONG. TOP
⑥ ND1304E	6	4'-2"		LONG. TOP
⑤ ND1905E	24	5'-5"		LONG. BOTTOM
⑥ ND1906E	6	5'-1"		LONG. BOTTOM
⑤ ND1607E	11	16'-8"		LONG. BOTTOM
⑥ ND1608E	2	16'-3"		LONG. BOTTOM
⑤ ND1609E	1	16'-4"		LONG. BOTTOM
⑥ ND1610E	1	15'-11"		LONG. BOTTOM

NOTES:

CONCRETE FOR END DIAPHRAGMS SHALL BE THE SAME MIX AS USED IN DECK.

QUANTITIES FOR END DIAPHRAGM CONCRETE AND REINFORCEMENT SHOWN ON THIS DETAIL SHALL BE LISTED IN SUPERSTRUCTURE QUANTITIES.

THREADED RODS ARE INCIDENTAL TO PRESTRESSED CONCRETE BEAMS.

① USE OF CONSTRUCTION JOINT REQUIRES CLEARANCE FOR EXPANSION DEVICE. WHEN CONSTRUCTION JOINT IS USED AT THIS LOCATION, DIAPHRAGM FALSEWORK SHALL REMAIN INPLACE UNTIL COMPLETION OF SLAB CURING PERIOD.

② PERPENDICULAR TO CENTERLINE OF DIAPHRAGM.

③ 2'-1" (36M) BASED ON 3" STOOL AND 9" DECK.

④ 2'-0" (36M) BASED ON NOTE ③.

⑤ FOR 7'-5" BEAM SPACING.

⑥ FOR 7'-0" BEAM SPACING.

NORTH ABUTMENT

APPROVED: SEPTEMBER 22, 2011	STATE OF MINNESOTA DEPARTMENT OF TRANSPORTATION	REVISED	DETAIL NO.
Nancy Daubenberger STATE BRIDGE ENGINEER	CONCRETE END DIAPHRAGM (36M PRESTRESSED CONCRETE BEAMS) (NORTH PARAPET ABUTMENT)		B814 MOD

S.P. NO. 1901-148 (T.H. 13=117), S.P. NO. 019-605-028, S.P. NO. 179-020-031

CERTIFIED BY Todd R. Stevens 7/9/12
LICENSED PROFESSIONAL ENGINEER DATE
NAME: TODD R. STEVENS LIC. NO. 21312

TITLE: DETAILS

DES: G.B.B.	DR: N.A.	APPROVED: 7-9-12	BRIDGE NO. 19036
CHK: P.D.G.	CHK: T.R.S.		

SHEET NO. 84 OF 91 SHEETS

TIME : 7:46:40 AM
PLOTTED : 09-JUL-2012
PATH & FILENAME: Bridge/Final_Design/1/19036/Cadd-Plan/19036.dgn
FILENAME: IP_PWP:d1453300V9036.dgn

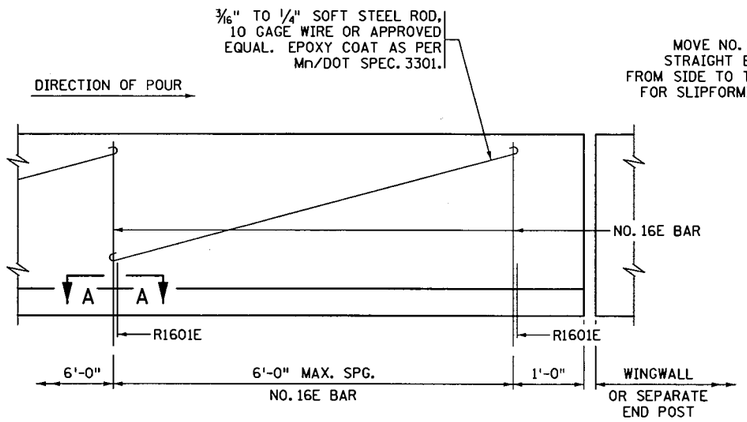

INSIDE ELEVATION OF RAILING

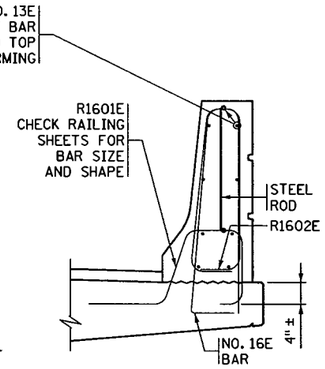

RAILING SECTION

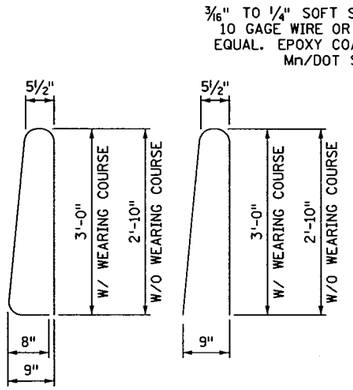

NO. 16E BAR

NO. 16E BAR

DRILLED IN ALTERNATE

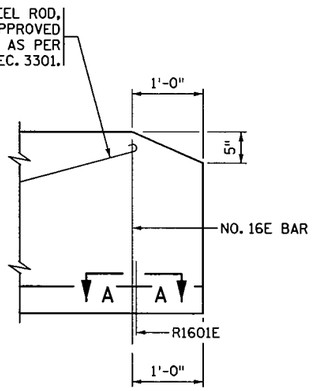

INSIDE ELEVATION OF RAILING

AT END OF WINGWALL

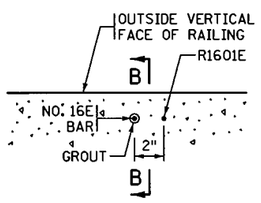

SECTION A-A

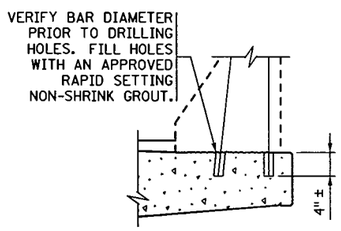

SECTION B-B

INSTALLATION DETAILS
FOR NO. 16E (DRILLED IN ALTERNATE)

NOTES:

CONTRACTOR WILL TOOL V-GROOVE AT DEFLECTION JOINTS AT TIME RAIL IS CAST AND SHALL EXTEND V-GROOVE AROUND ENTIRE PERIMETER OF RAIL.

FOR ADDITIONAL DIMENSIONS, DETAILS, REINFORCEMENT AND NOTES SEE RAILING SHEET.

FORM RAIL FOR A MINIMUM OF 2' ON EACH SIDE OF EXPANSION DEVICES, LIGHT STANDARDS AND DECK DRAIN BOX OUTS.

PAY QUANTITIES WILL NOT BE ADJUSTED AS A RESULT OF SELECTING THIS ALTERNATE.

USE A SIMILAR METHOD FOR TALLER RAILINGS OR MODIFIED VERSIONS OF THIS RAILING.

APPROVED: NOVEMBER 22, 2002	STATE OF MINNESOTA DEPARTMENT OF TRANSPORTATION	REVISION	DETAIL NO.
Daniel L Dorgan STATE BRIDGE ENGINEER	CONCRETE RAILING (TYPE F) (SLIPFORM ALTERNATE)		B830

S.P. NO. 1901-148 (T.H. 13=117), S.P. NO. 019-605-028, S.P. NO. 179-020-031

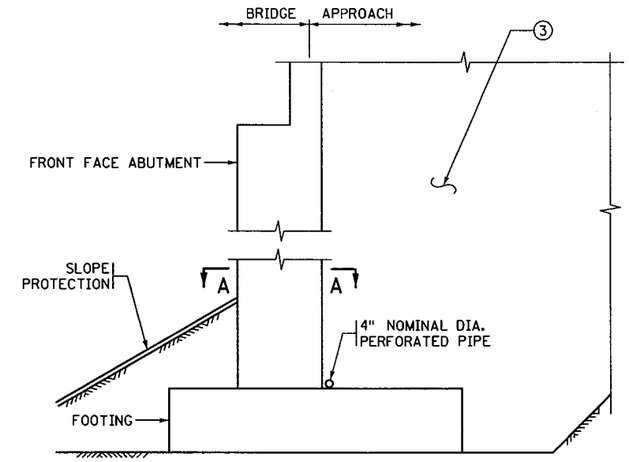

SECTION THROUGH PARAPET AND SEMI INTEGRAL ABUTMENTS

SUMMARY OF QUANTITIES FOR DRAINAGE SYSTEM

	4" DIA. PERFORATED PIPE	250 LIN. FT.
	4" DIA. NON-PERFORATED PIPE	100 LIN. FT.
	45° ELBOW	1 EACH
	4" DIA. END CAP	4 EACH
	4" DIA. COUPLING	4 EACH
	PIPE SLEEVE	4 EACH
1	PRECAST CONCRETE HEADWALL	4 EACH
	90° ELBOW	3 EACH

THE SUMMARY OF QUANTITIES FOR DRAINAGE SYSTEM IS AS SHOWN ABOVE. ANY ADDITIONAL MINOR ITEMS OR SLIGHT CHANGES OF QUANTITIES REQUIRED SHALL BE FURNISHED BY THE CONTRACTOR WITH NO ADDITIONAL COMPENSATION.

PAYMENT WILL BE INCLUDED IN THE SINGLE LUMP SUM PRICE FOR ITEM 2502.502 "DRAINAGE SYSTEM TYPE (B910)".

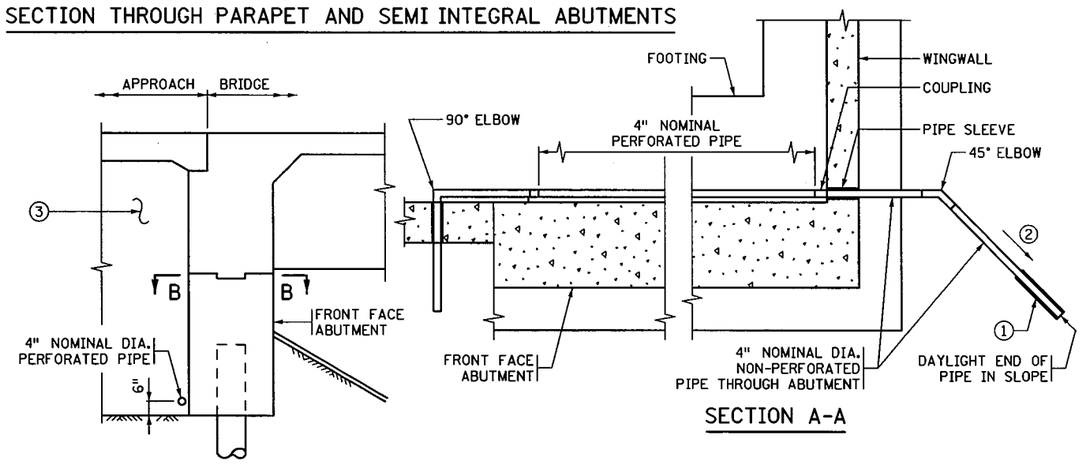

SECTION A-A

SECTION THROUGH INTEGRAL ABUTMENT

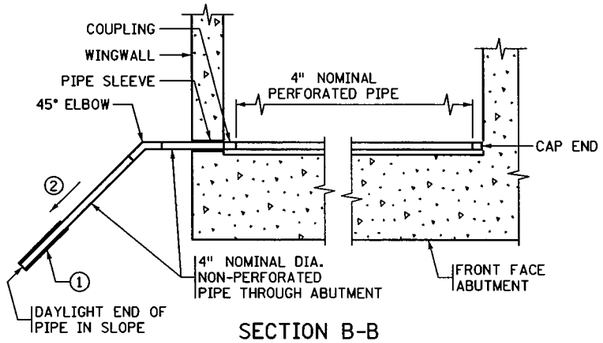

SECTION B-B

NOTES:

ALL PIPE SHALL COMPLY WITH Mn/DOT SPEC. 3245.

WRAP PERFORATED PIPE WITH GEOTEXTILE AS PER Mn/DOT SPEC. 3733, TYPE 1. ATTACH TO PIPE AS PER Mn/DOT SPEC. 2502.

1 PRECAST CONCRETE HEADWALL WITH RODENT SCREEN. SEE STANDARD PLATE 3131 FOR DETAILS.

2 1/8" PER FT. MINIMUM SLOPE.

3 MATERIAL SHALL COMPLY WITH Mn/DOT SPEC. 3149.2B SELECT GRANULAR BORROW, MODIFIED SO THAT NO MORE THAN 10% PASSES A NO. 200 SIEVE. (UNDER GRADING PORTION OF CONTRACT)

APPROVED: MARCH 26, 2009	STATE OF MINNESOTA DEPARTMENT OF TRANSPORTATION	REVISED 10-22-2009	DETAIL NO.
Daniel L Dorgan STATE BRIDGE ENGINEER	DRAINAGE SYSTEM		B910 MOD

CERTIFIED BY Todd R. Stevens 7/9/12 LICENSED PROFESSIONAL ENGINEER DATE
NAME: TODD R. STEVENS LIC. NO. 21312

TITLE: DETAILS

DES:	DR: N.A.	APPROVED: 7-9-12	BRIDGE NO. 19036
CHK:	CHK: T.R.S.		

SHEET NO. 85 OF 91 SHEETS

FILENAME: IP_PWP:d1453300V9036.dgn
TIME : 7:47:08 AM
PLOTTED : 09-JUL-2012
PATH & FILENAME: Bridge/Final_Design/1/19036/Cadd-Plan/19036.dgn

CONCRETE WEARING COURSE

☐ LOW SLUMP

☐ OTHER _____
TYPE OR MANUFACTURER

EXPANSION JOINTS

JOINT MANUFACTURER

MANUFACTURER'S IDENTIFICATION _____
MFR'S No. AND/OR LETTER DESIGNATION FOR JOINT USED

GLAND MANUFACTURER _____
NAME AND ADDRESS (CITY, STATE)

SIZE OF GLAND _____

MANUFACTURER'S IDENTIFICATION _____
MFR'S No. AND/OR LETTER DESIGNATION FOR GLAND USED

ELASTOMERIC BEARING PADS

PAD MANUFACTURER _____
NAME AND ADDRESS (CITY, STATE)

SPECIAL SURFACE FINISH

SYSTEM: _____ COLOR: _____

FINISHING ROADWAY FACES OF BARRIER RAILING

TYPE: _____ COLOR: _____

ANTI-GRAFFITI COATING

MANUFACTURER _____
NAME AND ADDRESS (CITY, STATE)

PRODUCT NAME: _____ LOCATION: _____

PAINT SYSTEM

Mn/DOT SPECIFICATION NUMBER _____
2478 OR 2479 OR OTHER

MANUFACTURER _____
NAME AND ADDRESS (CITY, STATE)

PRIME COAT _____
Mn/DOT MATERIAL SPECIFICATION NUMBER

INTERMEDIATE COAT _____
Mn/DOT MATERIAL SPECIFICATION NUMBER

FINISH COAT _____ _____
Mn/DOT MATERIAL SPECIFICATION NUMBER COLOR

PLAN QUALITY

RATE 1 (AGREE), 2 (NEUTRAL), OR 3 (DISAGREE, PLEASE COMMENT BELOW)

DIMENSIONING AND DETAILING ADEQUATELY DESCRIBED REQUIRED CONSTRUCTION. _____

BAR LISTS AND QUANTITIES WERE TYPICALLY COMPLETE AND FREE OF ERRORS. _____

SCALE OF DRAWINGS AND OVERALL LEGIBILITY OF LINES AND TEXT WAS GOOD. _____

(SB) SPECIAL PROVISIONS ADEQUATELY DESCRIBED SPECIAL WORK AND PAYMENT. _____

COMMENTS: _____

NUMBER OF BRIDGE SUPPLEMENTAL AGREEMENTS: _____ COST: $ _____

LIST SIGNIFICANT ERRORS OR OMISSIONS IN PLAN DETAILS OR PAY QUANTITIES IN THE SPACE PROVIDED AT RIGHT.

BRIDGE REMOVAL / BRIDGE OPENING

NUMBER OF AND DATE OLD BRIDGE WAS REMOVED (IF APPLICABLE):

BRIDGE NUMBER _____ DATE REMOVED _____

DATE NEW BRIDGE WAS OPENED TO TRAFFIC _____

NOTIFY THE BRIDGE OFFICE BRIDGE MANAGEMENT UNIT WITH THIS INFORMATION AS SOON AS POSSIBLE. (651) 366-4557

OTHER ITEMS ①

① UTILITIES ADDED DURING CONSTRUCTION AND SPECIALTY ITEMS.

FINAL QUANTITIES ENTERED ON SCHEDULE OF QUANTITIES: YES ☐ NO ☐

SUMMARY OF SIGNIFICANT AS-BUILT CHANGES

THE AS-BUILT INFORMATION WAS ADDED TO THE PLAN BY:

_____ _____
INSPECTOR(S) SIGNATURE DATE

CHECKED BY: _____ _____
PROJECT ENGINEER/SUPERVISOR SIGNATURE DATE

AT THE TIME OF THE FINAL, THIS COMPLETED AS-BUILT BRIDGE DATA SHEET MUST BE SUBMITTED TO THE BRIDGE OFFICE - ATTN: REGIONAL CONSTRUCTION ENGINEER (MS610).

REVISION: 10-28-2008

APPROVED: SEPTEMBER 26, 2003
Daniel L. Morgan
STATE BRIDGE ENGINEER

AS-BUILT DETAILS
(AS NEEDED)

S.P. NO. 1901-148 (T.H. 13=117), S.P. NO. 019-605-028, S.P. NO. 179-020-031

FIG. 5-397.900

TITLE: AS-BUILT BRIDGE DATA

DES:	DR: N.A.	APPROVED: 7-9-12	BRIDGE NO. 19036
CHK:	CHK: T.R.S.		
SHEET NO. 86 OF 91 SHEETS			

FILENAME: IP_PWP:d1453300V9036.dgn
TIME : 7:47:36 AM
PLOTTED : 09-JUL-2012
PATH & FILENAME: Bridge/Final_Design/1/19036/Cadd-Plan/19036.dgn

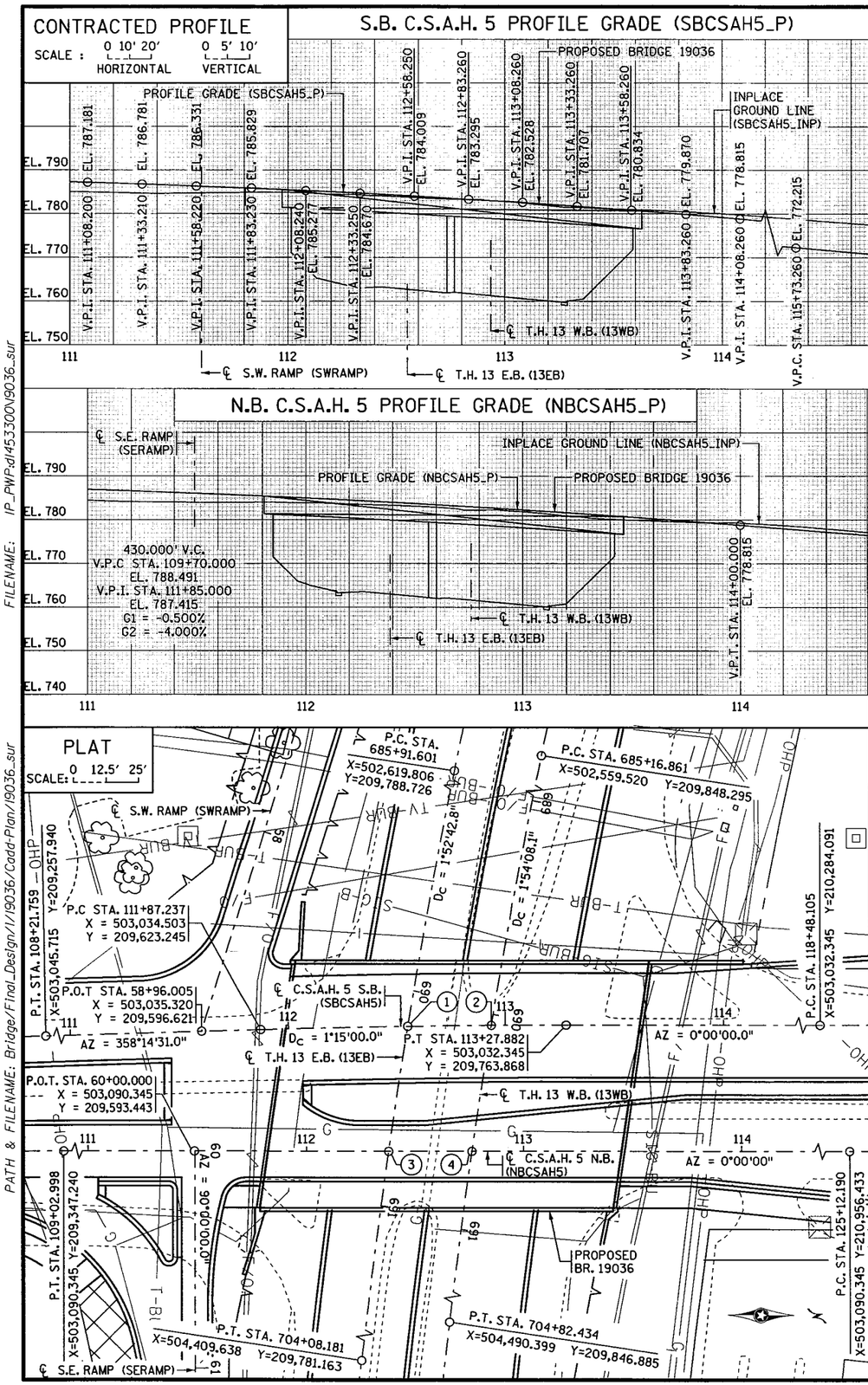

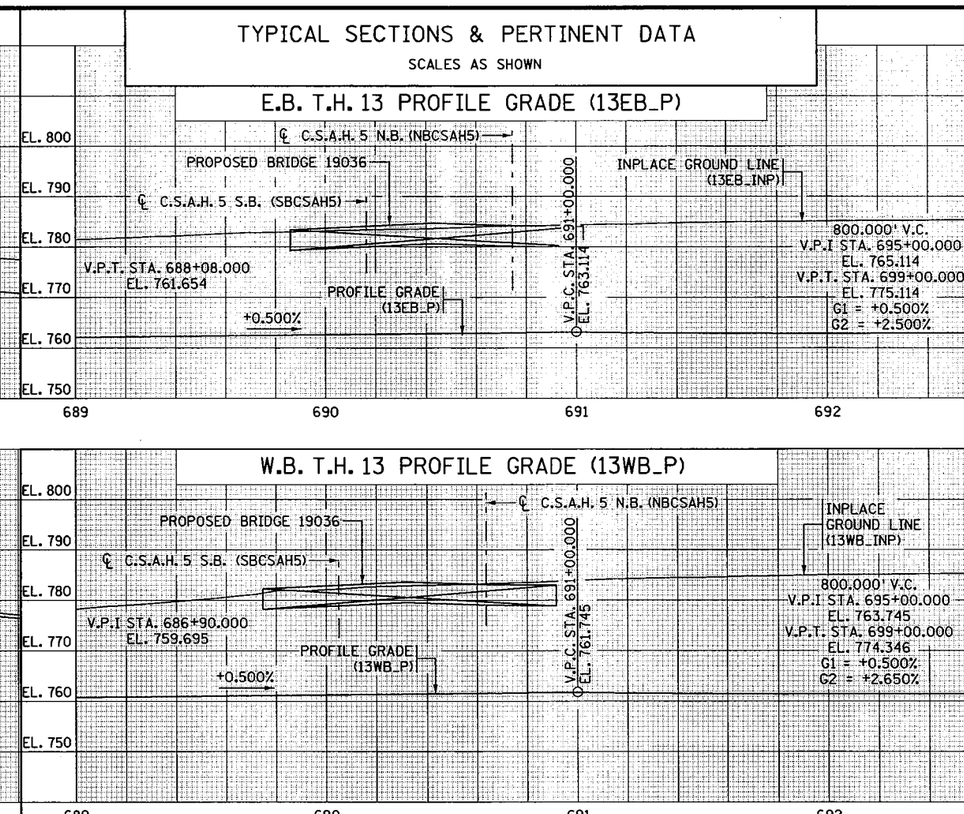

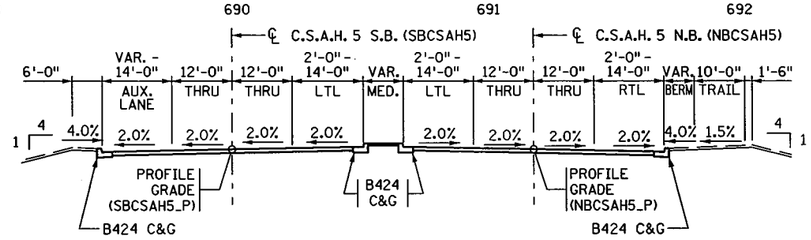

PROPOSED TYPICAL SECTION
C.S.A.H. 5

NOTES:

1. ℄ C.S.A.H. 5 S.B. (SBCSAH5) P.O.C. STA. 112+54.972 =
   ℄ T.H. 13 E.B. (13EB) P.O.C. STA. 690+16.474
   X = 503,032.925 Y = 209,690.961
2. ℄ C.S.A.H. 5 S.B. (SBCSAH5) P.O.C. STA. 112+93.565 =
   ℄ T.H. 13 W.B. (13WB) P.O.C. STA. 690+05.028
   X = 503,032.474 Y = 209,729.552
3. ℄ C.S.A.H. 5 N.B. (NBCSAH5) P.O.T. STA. 112+37.853 =
   ℄ T.H. 13 E.B. (13EB) P.O.C. STA. 690+74.575
   X = 503,090.345 Y = 209,682.095
4. ℄ C.S.A.H. 5 N.B. (NBCSAH5) P.O.T. STA. 112+76.253 =
   ℄ T.H. 13 W.B. (13WB) P.O.C. STA. 690+63.605
   X = 503,090.345 Y = 209,720.496

THE SUBSURFACE UTILITY INFORMATION IN THIS PLAN IS UTILITY QUALITY LEVEL D. THIS UTILITY QUALITY LEVEL WAS DETERMINED ACCORDING TO THE GUIDELINES OF CI/ASCE 38-02, ENTITLED "STANDARD GUIDELINES FOR THE COLLECTION AND DEPICTION OF EXISTING SUBSURFACE UTILITY DATA".

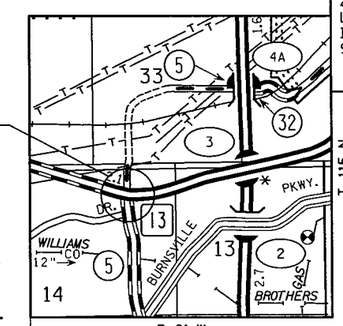

INDEX MAP
(PARTS OF FIVE SECTIONS)

Date:
Initials:

LOCATION ENGINEER'S OBSERVATIONS AT BRIDGE SITE

1. SPECIAL FEATURES: WATERFALLS, DAMS, FLOODS, ICE, DEBRIS, SLIDING BANKS, RECREATIONAL BOATING.
2. OTHER BRIDGES OR CULVERTS OVER THE SAME STREAM (PARTICULARLY STRUCTURES WHICH CARRY HIGH WATER WITHOUT OVERFLOW OF ROADWAY): GIVEN LOCATION, TYPE, LENGTH, HEIGHT ABOVE HIGH WATER, CROSS-SECTIONAL AREA ETC.
3. APPARENT HIGHWATER ELEVATION OBTAINED FROM:
4. OTHER DATA: APPROX. VELOCITY OF WATER AT TIME OF SURVEY.

HYDRAULIC ENGINEERS RECOMMENDATION

DATE: XX-XX-XX

STREAM OR DITCH DESIGNATION: XXX
DRAINAGE AREA: XXX SQ. MI.
MAX. FLOOD ON RECORD: XXX C.F.S. (XX-XX-XX)
MAXIMUM OBSERVED HIGHWATER ELEVATION: XXX.X FT.
DESIGN FLOOD (XX YR. FREQ.): XXX C.F.S.
HEADWATER ELEVATION: XXX.X FT.
DESIGN MEAN VELOCITY THROUGH STRUCTURE: X.X F.P.S.
TOTAL STAGE INCREASE: XX.X FT.
LOW MEMBER AT OR ABOVE ELEVATION: XXX.X FT.
WATERWAY AREA REQUIRED BELOW ELEV. XXX.X = XXX SQ. FT. AT RIGHT ANGLES TO CHANNEL
BASIC FLOOD (100 YR. FREQ.): XXXX C.F.S.
HEADWATER ELEVATION: XXX.X FT.
TOTAL STAGE INCREASE: X.X FT.
MEAN VELOCITY THROUGH STRUCTURE: X.X F.P.S.
FLOWLINE ELEVATION: XXX.X FT. SKEW ANGLE: XX°
ESTIMATED PRELIMINARY TOTAL SCOUR AT PIER EL. XXX.X (500 OR OT YR. FREQ.)

SCOUR CONFIRMATION RECOMMENDATION

DATE: XX-XX-XX

TOTAL SCOUR AT PIER EL. XXX.XX (500 OR OT YR. FREQ.)
SCOUR CODE: OBTAIN FROM HYDRAULIC ENGINEER

BRIDGE SURVEY SHEETS MADE FROM :
SURVEYS TIN sPH1901148A_01.TIN

BENCH MARK ELEVATION 728.660 (N.A.V.D. 88 ADJ.)
LOCATION: 1901 I IN BURNSVILLE AT T.H. 13, MILEPOINT 95.7, 1.75 MI. W. OF JCT. T.H. 13 AND I-35W, 118.0 FT. N OF T.H. 13, 118.0 FT. E. OF BEARD AVE., 53.0 FT. N. OF N. FRONTAGE ROAD, 98.0 FT. E. OF POWER POLE., 3.2 FT. S.W. OF WITNESS POST.

2nd BENCH MARK ELEVATION 833.670 (N.A.V.D. 88 ADJ.)
LOCATION: 1981 F2 IN BURNSVILLE, AT JCT. OF T.H. 13 AND I-35W, IN N.W. ABUTMENT OF WESTBOUND T.H. 13 BRIDGE 9779 OVER I-35W.

MINNESOTA
DEPARTMENT OF TRANSPORTATION

BRIDGE SURVEY

PROPOSED BRIDGE LOCATED
0.8 MILES WEST OF JCT.
T.H. 13 AND T.H. 35W

SEC 14 T 115 N R 21 W

COUNTY: DAKOTA

CITY OF BURNSVILLE

BRIDGE NO. **19036**

S.P. NO. 1901-148 (T.H. 13=117), S.P. NO. 019-605-028, S.P. NO. 179-020-031

APPR. 7-9-12

FILENAME: IP_PWP.dl453300\9036_sur
TIME : 8:05:40 AM
PLOTTED : 09-JUL-2012
PATH & FILENAME: Bridge/Final_Design/1/19036/Cadd-Plan/19036_sur

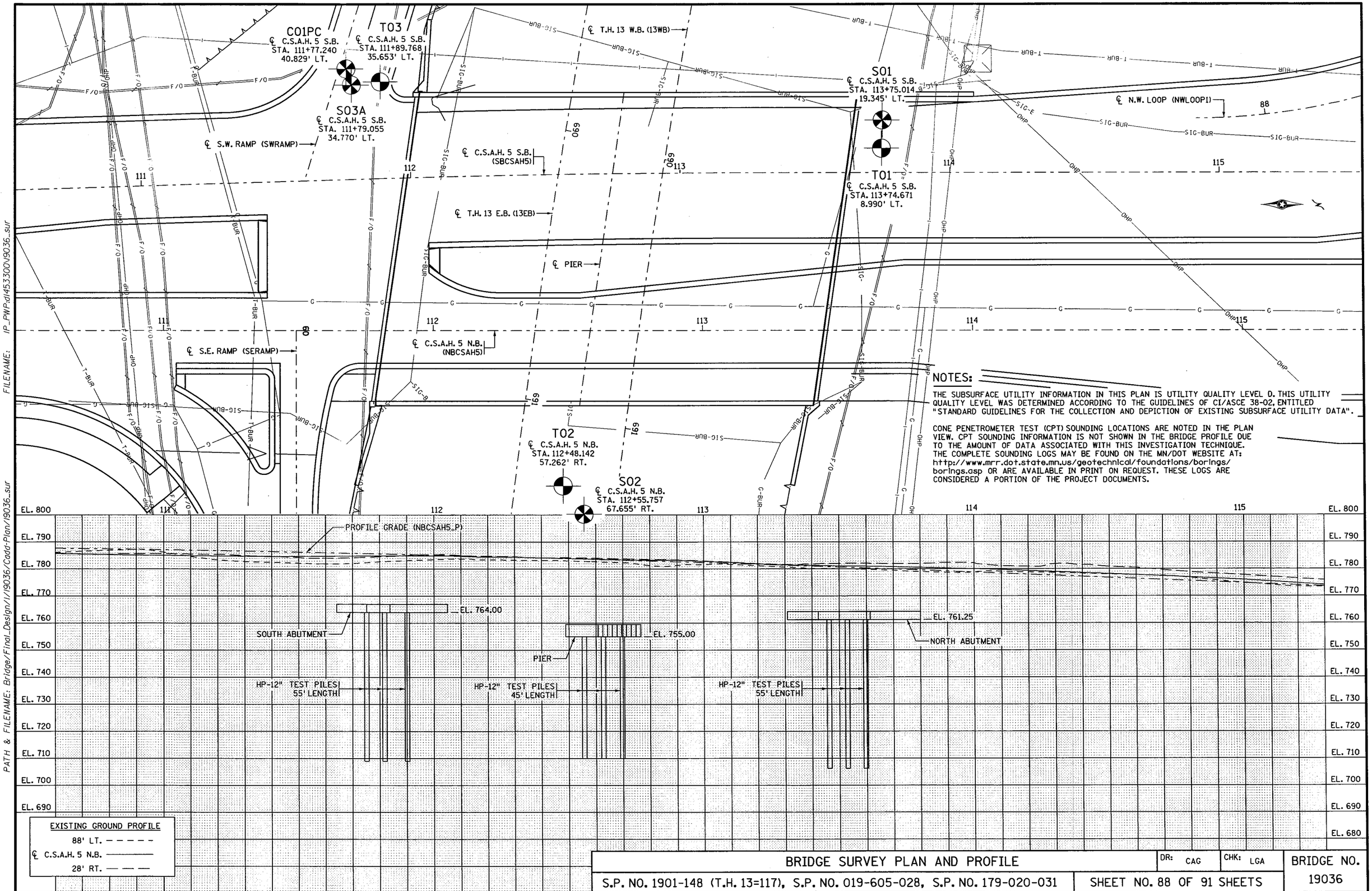

NOTES:

THE SUBSURFACE UTILITY INFORMATION IN THIS PLAN IS UTILITY QUALITY LEVEL D. THIS UTILITY QUALITY LEVEL WAS DETERMINED ACCORDING TO THE GUIDELINES OF CI/ASCE 38-02, ENTITLED "STANDARD GUIDELINES FOR THE COLLECTION AND DEPICTION OF EXISTING SUBSURFACE UTILITY DATA".

CONE PENETROMETER TEST (CPT) SOUNDING LOCATIONS ARE NOTED IN THE PLAN VIEW. CPT SOUNDING INFORMATION IS NOT SHOWN IN THE BRIDGE PROFILE DUE TO THE AMOUNT OF DATA ASSOCIATED WITH THIS INVESTIGATION TECHNIQUE. THE COMPLETE SOUNDING LOGS MAY BE FOUND ON THE MN/DOT WEBSITE AT: http://www.mrr.dot.state.mn.us/geotechnical/foundations/borings/borings.asp OR ARE AVAILABLE IN PRINT ON REQUEST. THESE LOGS ARE CONSIDERED A PORTION OF THE PROJECT DOCUMENTS.

BRIDGE SURVEY PLAN AND PROFILE	DR: CAG	CHK: LGA	BRIDGE NO. 19036
S.P. NO. 1901-148 (T.H. 13=117), S.P. NO. 019-605-028, S.P. NO. 179-020-031	SHEET NO. 88 OF 91 SHEETS		

APPR. 7-9-12

FILENAME: IP_PWP.dl453300\19036_sur
TIME : 09:09:01 AM
PLOTTED : 09-JUL-2012
PATH & FILENAME: Bridge/Final_Design/1/19036/Cadd-Plan/19036_sur

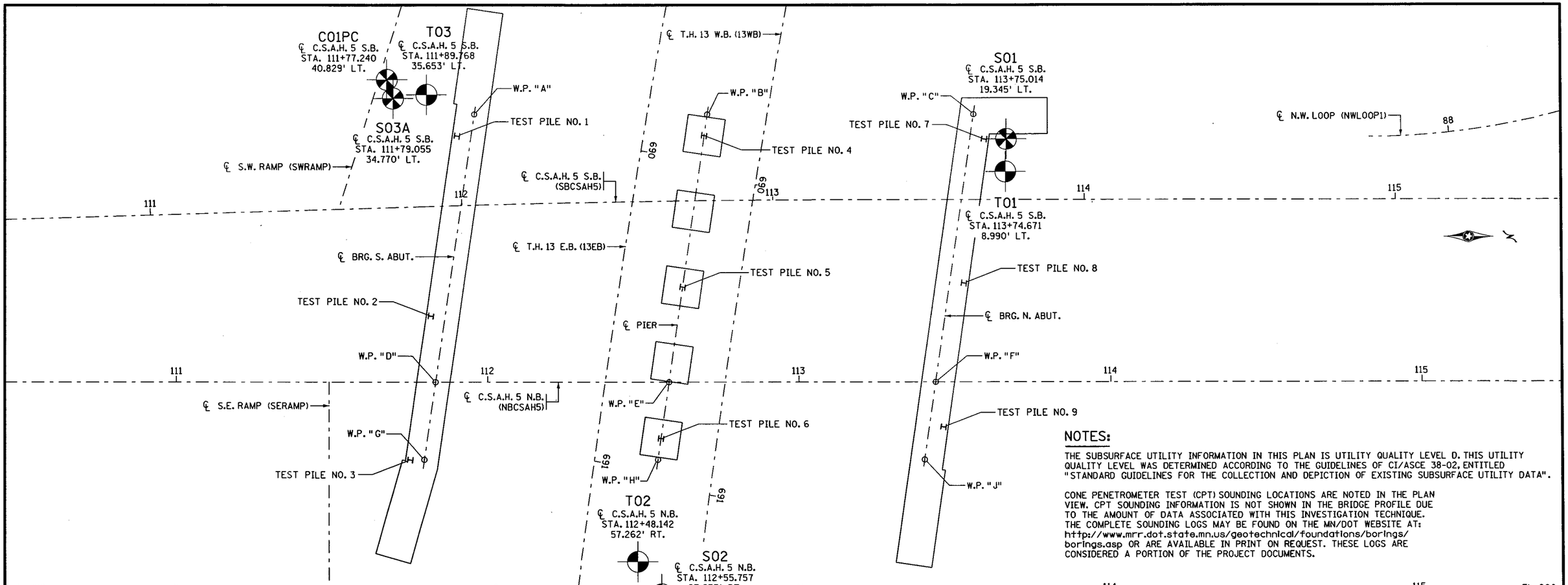

NOTES:

THE SUBSURFACE UTILITY INFORMATION IN THIS PLAN IS UTILITY QUALITY LEVEL D. THIS UTILITY QUALITY LEVEL WAS DETERMINED ACCORDING TO THE GUIDELINES OF CI/ASCE 38-02, ENTITLED "STANDARD GUIDELINES FOR THE COLLECTION AND DEPICTION OF EXISTING SUBSURFACE UTILITY DATA".

CONE PENETROMETER TEST (CPT) SOUNDING LOCATIONS ARE NOTED IN THE PLAN VIEW. CPT SOUNDING INFORMATION IS NOT SHOWN IN THE BRIDGE PROFILE DUE TO THE AMOUNT OF DATA ASSOCIATED WITH THIS INVESTIGATION TECHNIQUE. THE COMPLETE SOUNDING LOGS MAY BE FOUND ON THE MN/DOT WEBSITE AT: http://www.mrr.dot.state.mn.us/geotechnical/foundations/borings/borings.asp OR ARE AVAILABLE IN PRINT ON REQUEST. THESE LOGS ARE CONSIDERED A PORTION OF THE PROJECT DOCUMENTS.

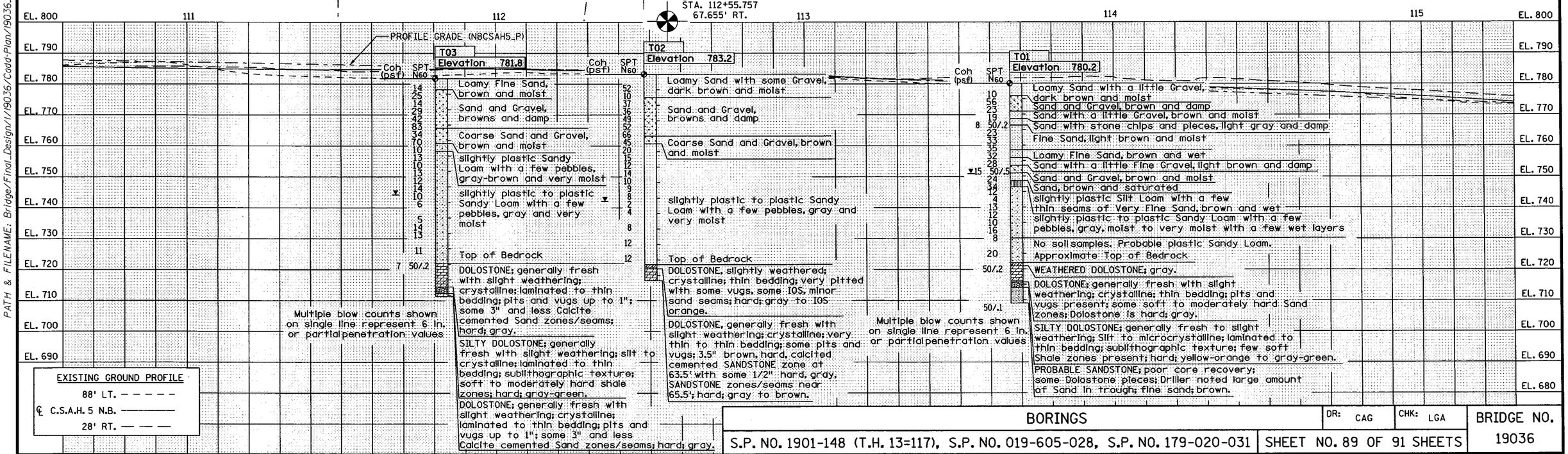

EXISTING GROUND PROFILE
88' LT. — — — — —
℄ C.S.A.H. 5 N.B. ————
28' RT. — — —

BORINGS	DR: CAG	CHK: LGA	BRIDGE NO. 19036
S.P. NO. 1901-148 (T.H. 13=117), S.P. NO. 019-605-028, S.P. NO. 179-020-031	SHEET NO. 89 OF 91 SHEETS		

APPR. 7-9-12

FILENAME: IP_PWP:d1453300V9036_sur
TIME : 8:06:31 AM
PLOTTED : 09-JUL-2012
PATH & FILENAME: Bridge/Final_Design/1/19036/Cadd-Plan/19036_sur

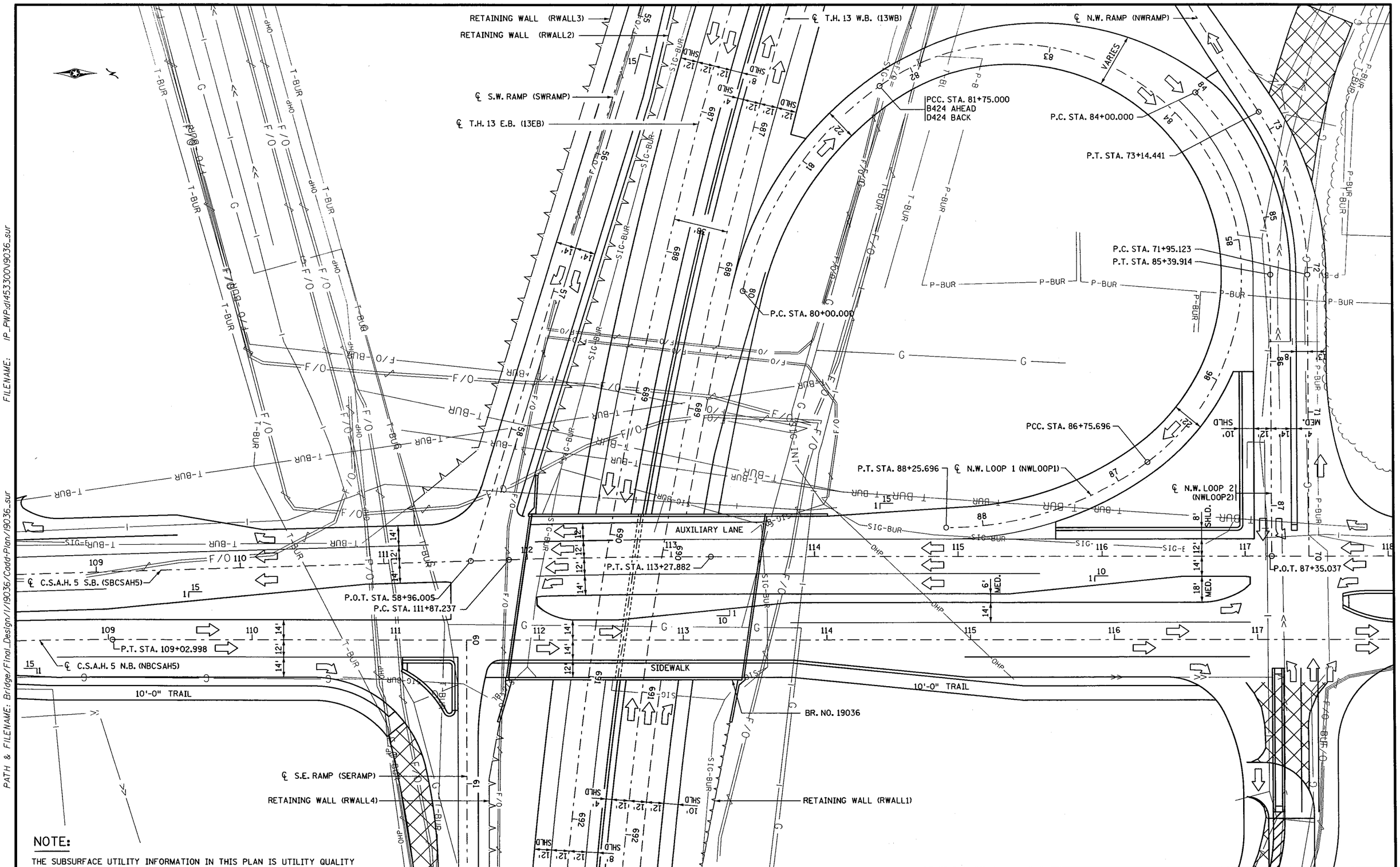

NOTE:

THE SUBSURFACE UTILITY INFORMATION IN THIS PLAN IS UTILITY QUALITY LEVEL D. THIS UTILITY QUALITY LEVEL WAS DETERMINED ACCORDING TO THE GUIDELINES OF CI/ASCE 38-02, ENTITLED "STANDARD GUIDELINES FOR THE COLLECTION AND DEPICTION OF EXISTING SUBSURFACE UTILITY DATA".

INPLACE UTILITIES & CONSTRUCTION PLAN	DR: CAG	CHK: LGA	BRIDGE NO. 19036
S.P. NO. 1901-148 (T.H. 13=117), S.P. NO. 019-605-028, S.P. NO. 179-020-031	SHEET NO. 90 OF 91 SHEETS		

APPR. 7-9-12

FILENAME: IP_PWP.dl453300\9036_sur
TIME : 8:06:55 AM
PLOTTED : 09-JUL-2012
PATH & FILENAME: Bridge/Final_Design/1/19036/Cadd-Plan/19036_sur

ALIGNMENT TABULATION

POINT NUMBER	POINT	STATION	CIRCULAR CURVE DATA DELTA	DEGREE	RADIUS	TANGENT	LENGTH	COORDINATES X	Y	AZIMUTH
		SBCSAH5								
1225	POT	100+00.000						503,158.9660	208,444.9375	
	PC	104+00.019						503,089.0938	208,838.8064	349° 56' 25.50"
1230	PI	106+11.259	8° 18' 05.47" RT	1° 58' 06.22"	2,910.789'	211.240'	421.741'	503,052.1961	209,046.7991	PI
	CC							505,955.1342	209,347.2404	
	PT	108+21.759						503,045.7154	209,257.9398	358° 14' 30.97"
	PC	111+87.237						503,034.5028	209,623.2455	358° 14' 30.97"
1235	PI	112+57.565	1° 45' 29.03" RT	1° 15' 00.00"	4,583.662'	70.328'	140.645'	503,032.3452	209,693.5404	PI
	CC							507,616.0076	209,763.8684	
	PT	113+27.882						503,032.3452	209,763.8684	0° 00' 00.00"
	PC	118+48.105						503,032.3452	210,284.0909	0° 00' 00.00"
1240	PI	119+53.561	2° 38' 09.40" RT	1° 15' 00.00"	4,583.662'	105.456'	210.875'	503,032.3452	210,389.5473	PI
	CC							507,616.0076	210,284.0909	
	PT	120+58.980						503,037.1951	210,494.8920	2° 38' 09.40"
	PC	121+08.996						503,039.4953	210,544.8546	2° 38' 09.40"
1245	PI	122+14.452	2° 38' 09.40" LT	1° 15' 00.00"	4,583.662'	105.456'	210.875'	503,044.3452	210,650.1994	PI
	CC							498,460.6829	210,755.6557	
	PT	123+19.871						503,044.3452	210,755.6557	0° 00' 00.00"
	PC	125+20.648						503,044.3452	210,956.4325	0° 00' 00.00"
1246	PI	126+82.562	6° 22' 03.49" RT	1° 58' 06.22"	2,910.789'	161.914'	323.494'	503,044.3452	211,118.3462	PI
	CC							505,955.1342	210,956.4325	
	PT	128+44.142						503,062.3027	211,279.2610	6° 22' 03.49"
1247	POT	132+13.570						503,103.2751	211,646.4102	
		NBCSAH5								
1200	POT	100+00.000						503,204.2588	208,452.9724	
	PC	104+00.019						503,134.3867	208,846.8414	349° 56' 25.50"
1205	PI	106+52.156	10° 03' 34.50" RT	2° 00' 00.00"	2,864.789'	252.138'	502.979'	503,090.3452	209,095.1028	PI
	CC							505,955.1342	209,347.2404	
	PT	109+02.998						503,090.3452	209,347.2404	0° 00' 00.00"
	PC	125+12.190						503,090.3452	210,956.4325	0° 00' 00.00"
1210	PI	126+71.545	6° 22' 03.49" RT	2° 00' 00.00"	2,864.789'	159.355'	318.382'	503,090.3452	211,115.7875	PI
	CC							505,955.1342	210,956.4325	
	PT	128+30.572						503,108.0189	211,274.1593	6° 22' 03.49"
1215	POT	132+00.000						503,148.9913	211,641.3084	
		13EB								
1350	POT	660+00.000						500,145.5116	210,559.6099	
	PC	685+91.601						502,619.8057	209,788.7258	107° 18' 17.27"
1355	PI	695+27.729	34° 07' 31.34" LT	1° 52' 42.78"	3,050.000'	936.129'	1,816.580'	503,513.5614	209,510.2698	PI
	CC							503,527.0429	212,700.6702	
	PT	704+08.181						504,409.6384	209,781.1625	73° 10' 45.93"
	PC	714+53.247						505,409.9914	210,083.5789	73° 10' 45.93"
1360	PI	719+42.074	4° 53' 07.11" RT	0° 30' 00.00"	11,459.156'	488.827'	977.062'	505,877.9043	210,225.0335	PI
	CC							508,725.9911	199,114.6957	
	PT	724+30.308						506,356.1638	210,326.1261	78° 03' 53.04"

ALIGNMENT TABULATION

POINT NUMBER	POINT	STATION	CIRCULAR CURVE DATA DELTA	DEGREE	RADIUS	TANGENT	LENGTH	COORDINATES X	Y	AZIMUTH
		13WB								
1300	POT	660+00.000						500,170.4978	210,639.8077	
	PC	664+64.000						500,613.4950	210,501.7887	107° 18' 17.27"
1305	PI	667+13.961	1° 25' 55.56" RT	0° 17' 11.32"	20,000.000'	249.962'	499.897'	500,852.1423	210,427.4364	PI
	CC							494,664.3985	191,407.0709	
	PT	669+63.897						501,088.8568	210,347.1430	108° 44' 12.83"
	PC	685+16.861						502,559.5195	209,848.2954	108° 44' 12.83"
1310	PI	695+36.077	37° 23' 24.42" LT	1° 54' 08.10"	3,012.000'	1,019.216'	1,965.573'	503,524.7209	209,520.8998	PI
	CC							503,527.0429	212,700.6702	
	PT	704+82.434						504,490.3995	209,846.8853	71° 20' 48.42"
	PC	710+62.959						505,040.4309	210,032.5603	71° 20' 48.42"
1315	PI	717+39.281	6° 43' 04.62" RT	0° 29' 50.00"	11,523.156'	676.322'	1,351.094'	505,681.2269	210,248.8748	PI
	CC							508,725.9911	199,114.6957	
	PT	724+14.054						506,342.9282	210,388.7426	78° 03' 53.04"
		SWRAMP								
1700	POT	50+00.000						502,185.3587	209,879.0422	
	PC	51+66.220						502,340.4141	209,819.1526	111° 07' 08.03"
1705	PI	52+63.188	3° 52' 37.06" LT	1° 59' 59.47"	2,865.000'	96.968'	193.862'	502,430.8694	209,784.2145	PI
	CC							503,372.6865	212,491.7241	
	PT	53+60.082						502,523.4799	209,755.4724	107° 14' 30.97"
1710	POT	58+96.005						503,035.3200	209,596.6208	
		SERAMP								
1760	POT	60+00.000						503,090.3452	209,593.4432	
	PC	62+58.715						503,349.0599	209,593.4432	90° 00' 00.00"
1761	PI	68+05.222	17° 57' 58.95" LT	1° 39' 26.45"	3,457.077'	546.507'	1,084.044'	503,895.5674	209,593.4432	PI
	CC							503,349.0599	213,050.5207	
	PT	73+42.759						504,415.4259	209,762.0182	72° 02' 01.05"
1762	POT	74+42.776						504,510.5656	209,792.8693	
		NWLOOP1								
	PC	80+00.000						502,848.2162	209,786.6939	283° 06' 48.56"
1740	PI	80+91.595	41° 46' 41.42" RT	23° 52' 23.67"	240.000'	91.595'	175.000'	502,759.0101	209,807.4749	PI
	CC							502,902.6676	210,020.4353	
	PCC	81+75.000						502,706.3317	209,882.4054	324° 53' 29.98"
1741	PI	343+10.167	179° 17' 54.52" RT	35° 48' 35.50"	160.000'	26,135.167'	500.696'	487,675.3612	231,262.6978	PI
	CC							502,837.2223	209,974.4253	
	PCC	86+75.696						502,966.9764	210,068.0409	144° 11' 24.50"
1742	PI	87+53.237	35° 48' 35.50" RT	23° 52' 23.67"	240.000'	77.541'	150.000'	503,012.3452	210,005.1583	PI
	CC							502,772.3452	209,927.6176	
	PT	88+25.696						503,012.3452	209,927.6176	180° 00' 00.00"

ALIGNMENT TABULATIONS

S.P. NO. 1901-148 (T.H. 13=117), S.P. NO. 019-605-028, S.P. NO. 179-020-031 Sheet No. 91 of 91 Sheets

APPR. 7-9-12

TIME : 10:3:21 AM
PLOTTED : 09-JUL-2012
PATH & FILENAME: Bridge/Final_Design/1/19036/Cadd-Plan/19036.sur